C37.119™

IEEE Guide for Breaker Failure Protection of Power Circuit Breakers

IEEE Power Engineering Society

Sponsored by the
Power System Relaying Committee

IEEE
3 Park Avenue
New York, NY 10016-5997, USA

6 March 2006

IEEE Std C37.119™-2005

Copyright The Institute of Electrical and Electronics Engineers, Inc.
Provided by IHS under license with IEEE
No reproduction or networking permitted without license from IHS

Not for Resale

and Electronics Engineers, Inc.
IEEE
nitted without license from IHS
Not for Resale

Recognized as an
American National Standard (ANSI)

IEEE Std C37.119™-2005

IEEE Guide for Breaker Failure Protection of Power Circuit Breakers

Sponsor

Power System Relaying Committee
of the
IEEE Power Engineering Society

Approved 29 December 2005

American National Standards Institute

Approved 22 September 2005

IEEE-SA Standards Board

Abstract: This guide compiles information on the application considerations for breaker failure protection. The reasons for local backup protection are described. Breaker failure schemes are discussed. Issues relating to the settings of current detectors and timers are discussed for various applications.
Keywords: breaker failure, local backup, protection, relay application, relaying

---

The Institute of Electrical and Electronics Engineers, Inc.
3 Park Avenue, New York, NY 10016-5997, USA

Copyright © 2006 by the Institute of Electrical and Electronics Engineers, Inc.
All rights reserved. Published 6 March 2006. Printed in the United States of America.

IEEE is a registered trademark in the U.S. Patent & Trademark Office and owned by the Institute of Electrical and Electronics Engineers, Incorporated.

Print: ISBN 0-7381-4822-9 SH95383
PDF: ISBN 0-7381-4823-7 SS95383

No part of this publication may be reproduced in any form, in an electronic retrieval system or otherwise, without the prior written permission of the publisher.

--`,,```,,,,````-`-`,,`,,`,`,,`---

Copyright The Institute of Electrical and Electronics Engineers, Inc.
Provided by IHS under license with IEEE
No reproduction or networking permitted without license from IHS

Not for Resale

IEEE Standards documents are developed within the IEEE Societies and the Standards Coordinating Committees of the IEEE Standards Association (IEEE-SA) Standards Board. The IEEE develops its standards through a consensus development process, approved by the American National Standards Institute, which brings together volunteers representing varied viewpoints and interests to achieve the final product. Volunteers are not necessarily members of the Institute and serve without compensation. While the IEEE administers the process and establishes rules to promote fairness in the consensus development process, the IEEE does not independently evaluate, test, or verify the accuracy of any of the information contained in its standards.

Use of an IEEE Standard is wholly voluntary. The IEEE disclaims liability for any personal injury, property or other damage, of any nature whatsoever, whether special, indirect, consequential, or compensatory, directly or indirectly resulting from the publication, use of, or reliance upon this, or any other IEEE Standard document.

The IEEE does not warrant or represent the accuracy or content of the material contained herein, and expressly disclaims any express or implied warranty, including any implied warranty of merchantability or fitness for a specific purpose, or that the use of the material contained herein is free from patent infringement. IEEE Standards documents are supplied "**AS IS**."

The existence of an IEEE Standard does not imply that there are no other ways to produce, test, measure, purchase, market, or provide other goods and services related to the scope of the IEEE Standard. Furthermore, the viewpoint expressed at the time a standard is approved and issued is subject to change brought about through developments in the state of the art and comments received from users of the standard. Every IEEE Standard is subjected to review at least every five years for revision or reaffirmation. When a document is more than five years old and has not been reaffirmed, it is reasonable to conclude that its contents, although still of some value, do not wholly reflect the present state of the art. Users are cautioned to check to determine that they have the latest edition of any IEEE Standard.

In publishing and making this document available, the IEEE is not suggesting or rendering professional or other services for, or on behalf of, any person or entity. Nor is the IEEE undertaking to perform any duty owed by any other person or entity to another. Any person utilizing this, and any other IEEE Standards document, should rely upon the advice of a competent professional in determining the exercise of reasonable care in any given circumstances.

Interpretations: Occasionally questions may arise regarding the meaning of portions of standards as they relate to specific applications. When the need for interpretations is brought to the attention of IEEE, the Institute will initiate action to prepare appropriate responses. Since IEEE Standards represent a consensus of concerned interests, it is important to ensure that any interpretation has also received the concurrence of a balance of interests. For this reason, IEEE and the members of its societies and Standards Coordinating Committees are not able to provide an instant response to interpretation requests except in those cases where the matter has previously received formal consideration. At lectures, symposia, seminars, or educational courses, an individual presenting information on IEEE standards shall make it clear that his or her views should be considered the personal views of that individual rather than the formal position, explanation, or interpretation of the IEEE.

Comments for revision of IEEE Standards are welcome from any interested party, regardless of membership affiliation with IEEE. Suggestions for changes in documents should be in the form of a proposed change of text, together with appropriate supporting comments. Comments on standards and requests for interpretations should be addressed to:

Secretary, IEEE-SA Standards Board

445 Hoes Lane

Piscataway, NJ 08854

USA

NOTE—Attention is called to the possibility that implementation of this standard may require use of subject matter covered by patent rights. By publication of this standard, no position is taken with respect to the existence or validity of any patent rights in connection therewith. The IEEE shall not be responsible for identifying patents for which a license may be required by an IEEE standard or for conducting inquiries into the legal validity or scope of those patents that are brought to its attention.

Authorization to photocopy portions of any individual standard for internal or personal use is granted by the Institute of Electrical and Electronics Engineers, Inc., provided that the appropriate fee is paid to Copyright Clearance Center. To arrange for payment of licensing fee, please contact Copyright Clearance Center, Customer Service, 222 Rosewood Drive, Danvers, MA 01923 USA; +1 978 750 8400. Permission to photocopy portions of any individual standard for educational classroom use can also be obtained through the Copyright Clearance Center.

Copyright The Institute of Electrical and Electronics Engineers, Inc.
Provided by IHS under license with IEEE
No reproduction or networking permitted without license from IHS
Not for Resale

Introduction

This introduction is not part of IEEE Std C37.119-2005, IEEE Guide for Breaker Failure Protection of Power Circuit Breakers.

Currently, there are no guidelines for applying breaker failure protection. The last IEEE PSRC document was a summary update of practices written in March 1981. This guide was written to help engineers arrive at the proper breaker failure protection scheme for their system.

Notice to users

Errata

Errata, if any, for this and all other standards can be accessed at the following URL: http://standards.ieee.org/reading/ieee/updates/errata/index.html. Users are encouraged to check this URL for errata periodically.

Interpretations

Current interpretations can be accessed at the following URL: http://standards.ieee.org/reading/ieee/interp/index.html.

Patents

Attention is called to the possibility that implementation of this standard may require use of subject matter covered by patent rights. By publication of this standard, no position is taken with respect to the existence or validity of any patent rights in connection therewith. The IEEE shall not be responsible for identifying patents or patent applications for which a license may be required to implement an IEEE standard or for conducting inquiries into the legal validity or scope of those patents that are brought to its attention.

Copyright © 2006 IEEE. All rights reserved.

Copyright The Institute of Electrical and Electronics Engineers, Inc.
Provided by IHS under license with IEEE
No reproduction or networking permitted without license from IHS
Not for Resale

Participants

At the time the standard was completed, the working group had the following membership:

Roger Hedding, *Chair*
Arvind Chaudhary , *Vice Chair*

S. Anderson
Alex Apostlov
John Appleyard
Roy Ball
George Bartok
Ron Beazer
Ken Behrendt
Robert Beresh
Martin Best
Gustav Brunello
Art Buanno
Zeeky Bukhala
Simon R. Chano
Terry Crawley
Randy Crellin
Randy Cunico
Albert N. Darlington
Paul Drum
Walter Elmore
David Emigh
Jon Ferraro
Kelly Gardner
Tony Giuliante
George Gresko
Irwin Hassenwinkle
Stan Horowitz
Randy Horton
Mohamed Ibrahim
Bob Jackson
Gerald Johnson
Peter Kemp
Tim Kern
Shoukat Khan
Mike Kloiber
Gary Kobet
Tom Lanigan
Larry Lawhead
Bill Lowe
Vahid Madani
Walter McCannon
Mike McDonald
Dean Miller
Pratap Mysore
Mukesh Nagpal
George Nail
Russell Patterson
Frank Plumptre
Elmo Price
Dan Reckerd
Don Sevcik
Charles Sufana
Joe Uchiyama
Sahib Usman
Don Ware
James Whatley
Roger Whittaker
Skip Williams
Ray Young
Rich Young

The following members of the individual balloting committee voted on this standard. Balloters may have voted for approval, disapproval, or abstention.

William Ackerman
Ali Al Awazi
Steve Alexanderson
Marcos Andrade
Richard F. Angle
Oscar Bolado
Munnu Bajpai
Paul Barnhart
Robert Beresh
Thomas Blair
Stuart Borlase
Stuart Bouchey
Jeff Burnworth
Simon R. Chano
Simon Cheng
Stephen P. Conrad
James R. Cornelison
Luis Coronado
R. Daubert
Matthew Davis
Robert Dempsey
Guru Dutt Dhingra
Kevin Donahoe
Paul Drum
Donald Dunn
Doug Edwards
Walter Elmore
Ahmed Elneweihi
Gary Engmann
William Feero
Rabiz Foda
Ajit Gwal
Trilok Garg
Frank Gerleve
Jeffrey Gilbert
Anthony Giuliante
Joseph Greco
Roger Hedding
Charles Henville
Jerry Hohn
Edward Horgan, Jr.
John Horwath
James D. Huddleston, III
Chris Huntley
James Ingleson
Jose Jarque
Saumen Kundu
Boris Kogan
David Krause
Edward Krizauskas
Jason Lin
Albert Livshitz
William Lowe
Gregory Luri
Keith Malmedal
Fortin Marcel
William Marsh
Jesus Martinez
Walter McCannon
Jeffrey Mcelray
Michael Meisinger
Gary Michel
Dean Miller
Brian Mugalian
George Nail
Anthony Napikoski
Joe Nims
James Parello
Charles Rogers
Mohindar S. Sachdev
Thomas Schossig
Donald R. Sevcik
H. Jin Sim
Mark Simon
James E. Smith
Joshua Smith
Allan St. Peter
Kevin Stephan
Rick Taylor
Shanmugan Thamilarasan
Michel Toupin
Eric Udren
Gerald Vaughn
Charles Wagner
James Wilson
Murty Yalla
Larry Yonce
Ray Young
Karl Zimmerman
Philip Winston

Copyright © 2006 IEEE. All rights reserved.
Copyright The Institute of Electrical and Electronics Engineers, Inc.
Provided by IHS under license with IEEE
No reproduction or networking permitted without license from IHS
Not for Resale

When the IEEE-SA Standards Board approved this standard on 22 September 2005, it had the following membership:

Steve M. Mills, *Chair*
Richard H. Hulett, *Vice Chair*
Don Wright, *Past Chair*
Judith Gorman, *Secretary*

Mark D. Bowman
Dennis B. Brophy
Joseph Bruder
Richard Cox
Bob Davis
Julian Forster*
Joanna N. Guenin
Mark S. Halpin
Raymond Hapeman
William B. Hopf
Lowell G. Johnson
Herman Koch
Joseph L. Koepfinger*
David J. Law
Daleep C. Mohla
Paul Nikolich
T. W. Olsen
Glenn Parsons
Ronald C. Petersen
Gary S. Robinson
Frank Stone
Malcolm V. Thaden
Richard L. Townsend
Joe D. Watson
Howard L. Wolfman

*Member Emeritus

Also included are the following nonvoting IEEE-SA Standards Board liaisons:

Satish K. Aggarwal, *NRC Representative*
Richard DeBlasio, *DOE Representative*
Alan H. Cookson, *NIST Representative*

Michelle Turner
IEEE Standards Project Editor

Copyright © 2006 IEEE. All rights reserved.

Copyright The Institute of Electrical and Electronics Engineers, Inc.
Provided by IHS under license with IEEE
No reproduction or networking permitted without license from IHS
Not for Resale

Contents

1. Overview 1

1.1 Scope 1

2. Normative references 2

3. Definitions, acronyms, and abbreviations 2

3.1 Acronyms and abbreviations 2
3.2 Definitions 3

4. The need for breaker failure protection 3

5. Backup protection 5

5.1 Introduction 5
5.2 Backup protection considerations 5
5.3 Breaker failure protection 6
5.4 Summary 7

6. Breaker failure modes 7

7. Breaker failure protection schemes 8

7.1 Basic breaker failure scheme 9
7.2 Basic breaker failure with re-trip logic 10
7.3 50BF reset time 11
7.4 Two-step timing arrangement 12
7.5 Breaker failure initiate (BFI) seal-in 13
7.6 Minimal current scheme 13
7.7 Fast 52aa, dual timer breaker failure scheme 14
7.8 Triple timer breaker failure scheme 14
7.9 Single-phase re-trip logic 15
7.10 Breaker failure timer bypass scheme 16
7.11 Multiple schemes within a relay 17
7.12 Dual breaker alternative 17

8. Breaker failure design considerations 17

8.1 Breaker failure current detectors 19
8.2 Part of existing protection 19
8.3 Breaker failure initiation 21
8.4 Breaker failure actions 21

9. Factors influencing settings 22

9.1 Total clearing time requirements 24
9.2 Control timer setting for scheme described in 7.3 25
9.3 Setting considerations for scheme described in 7.4 25

10. Communications based breaker failure protection 25

--`,,```,,,,````-`-`,,`,,`,`,,`---

Copyright © 2006 IEEE. All rights reserved.

Copyright The Institute of Electrical and Electronics Engineers, Inc.
Provided by IHS under license with IEEE
No reproduction or networking permitted without license from IHS

Not for Resale

10.1 Communications in conventional breaker failure protection 25
10.2 High-speed peer-to-peer communications on substation LAN 26

11. Breaker failure relay testing 28

11.1 End-to-end testing 29

Annex A (informative) Bibliography 30

Annex B (informative) Breaker failure setting example 31

Copyright © 2006 IEEE. All rights reserved.

Copyright The Institute of Electrical and Electronics Engineers, Inc.
Provided by IHS under license with IEEE
No reproduction or networking permitted without license from IHS
Not for Resale

Copyright The Institute of Electrical and Electronics Engineers, Inc.
Provided by IHS under license with IEEE
No reproduction or networking permitted without license from IHS
Not for Resale

IEEE Guide for Breaker Failure Protection of Power Circuit breakers

1. Overview

In general, backup relay protection has been used on power systems for many years. Typically, all parts of the protection system including the relays, voltage and current transformers, circuit breakers, and control power source are vulnerable to failure. All of these components must work properly to effectively clear a fault. Breaker failure schemes are specifically employed to provide backup protection in the event that a circuit breaker fails to operate properly during fault clearing.

This guide will review generally accepted breaker failure schemes used on utility transmission systems. Many of the characteristics of these schemes also apply to the use of breaker failure on utility distribution systems. Schemes will be carefully examined so that advantages as well as disadvantages can be compared. Application examples and testing practices are also included.

The guide is written for engineers who have a working knowledge of power-system protection but require a better understanding of breaker failure applications. It can also be used as an evaluation tool when comparing alternative breaker failure options.

1.1 Scope

This guide is intended to help the relay engineer understand the application considerations when applying breaker failure protection (BFP) to power circuit breakers. The discussion is limited to those instances where the breaker does not clear the fault after a protective relay has issued a command to open (trip) the circuit breaker. Failure to close, failure while closed, and failure while open are not discussed. The intent of this guide is not to give the reader methods of protecting a power circuit breaker from failing; rather, it is to give the reader a guide in how to detect that a breaker has failed to clear a fault, and how to electrically isolate the fault after the breaker has failed to clear the fault.

Copyright © 2006 IEEE. All rights reserved.

--`,,```,,,,````-`-`,,`,,`,`,,`---

Copyright The Institute of Electrical and Electronics Engineers, Inc.
Provided by IHS under license with IEEE
No reproduction or networking permitted without license from IHS
Not for Resale

2. Normative references

The following referenced documents are indispensable for the application of this document. For dated references, only the edition cited applies. For undated references, the latest edition of the referenced document (including any amendments or corrigenda) applies.

IEEE Std C37.102™-1995, IEEE Guide for AC Generator Protection.[1, 2]

IEEE Std C37.113™-1999, IEEE Guide for Protective Relay Applications to Transmission Lines.

3. Definitions, acronyms, and abbreviations

For the purpose of this guide, the following terms and definitions apply. The *Authoritative Dictionary of IEEE Standards Terms*, Seventh Edition, [B5][3] should be referenced for terms not defined in this clause.

3.1 Acronyms and abbreviations

The following are a listing of abbreviations used in this guide:

50	instantaneous overcurrent element
50G	instantaneous overcurrent ground element
50BF	breaker failure current detector
50BF-A	breaker failure current detector phase A
50BF-B	breaker failure current detector phase B
50BF-C	breaker failure current detector phase C
52a	breaker auxiliary contact that is closed when the breaker is closed and open when the breaker open
52b	breaker auxiliary contact that is open when the breaker is closed and closed when the breaker is open
52aa	breaker auxiliary contact that is closed when the breaker is closed, and opens as soon as the breaker operate mechanism begins moving from the closed to the open position
62-1	breaker failure timer 1
62-2	breaker failure timer 2
62-3	breaker failure timer 3
62-A	breaker failure timer, phase A
62-B	breaker failure timer, phase B
62-C	breaker failure timer, phase C
62-M	breaker failure timer for multiphase faults
62-S	breaker failure timer for single line to ground faults
62-X	breaker failure timer (any, non specific)
86BF	breaker failure auxiliary lockout relay
BFI	breaker failure initiate input
BFI-A	breaker failure initiate input, phase A
BFI-B	breaker failure initiate input, phase B
BFI-C	breaker failure initiate input, phase C
BFP	breaker failure protection
BFR	breaker failure relay
DTT	direct transfer trip
IED	intelligent electronic devices

[1]IEEE publications are available from the Institute of Electrical and Electronics Engineers, Inc., 445 Hoes Lane, Piscataway, NJ 08854, USA (http://standards.ieee.org/).

[2]The IEEE standards or products referred to in this clause are trademarks of the Institute of Electrical and Electronics Engineers, Inc.

[3]The numbers in brackets correspond to those of the bibliography in Annex A.

Copyright © 2006 IEEE. All rights reserved.
Copyright The Institute of Electrical and Electronics Engineers, Inc.
Provided by IHS under license with IEEE
No reproduction or networking permitted without license from IHS
Not for Resale

3.2 Definitions

3.2.1 backup protection: A protection scheme for the same zone of protection as the primary protection but may be slower and removes the same or additional equipment from service. Backup protection may be installed locally, i.e., in the same substation as the primary protection, or remotely.

3.2.2 breaker failure protection (BFP): This protection is specifically relied upon to take appropriate action to clear a fault when the breaker that is normally expected to clear the fault fails to do so for any reason.

3.2.3 control timer: A timer that limits the amount of time the breaker failure scheme is active after initiation.

3.2.4 critical clearing time: the longest time that fault conditions may persist before system stability is lost.

3.2.5 local breaker failure protection: A backup protection system that is in the same substation as the primary protection, so it does not suffer from the disadvantages of the remote backup protection. However, it may use some of the same equipment, such as transducers, batteries, and circuit breakers as the primary protection and can therefore fail to operate for the same reasons as the primary protection.

3.2.6 primary protection: The main protection system for a given zone of protection that operates in the fastest time and removes the least amount of equipment from service.

3.2.7 remote backup protection: Historically, the first set of backup protection that was installed. It is completely independent of the relays, transducers, batteries, and circuit breakers of the primary protection system it is backing up by virtue of its physical location. Its advantage is that there are no common-mode failures that can affect both systems of protection. Its disadvantage is the fact that remote protection may remove more system elements than is desirable or necessary to clear a fault. Additionally, as the power system matured, it became increasingly difficult for remote protection to detect (see) all the faults that the primary protection could detect.

It must be recognized that these definitions are only intended to facilitate communication so that there is general understanding of the subject under discussion. They are not to be rigidly applied as if they constituted design specifications. Protection systems are designed in accordance with accepted engineering principles involving reliability (dependability and security), selectivity, and coordination. The definitions when applied to individual elements, or to the total protection system, are for specific applications and may vary with the application. For instance, in a substation without a pilot protection system, time-delay overcurrent or zone 2 relays are the primary protection for faults in the last 10%–20% of the line but are the remote backup protection for the adjoining bus and line section. When a pilot scheme is installed, the time-delay overcurrent and zone 2 relays are then referred to as local backup for the end-of-line faults and remote backup for the adjoining bus and line section.

4. The need for breaker failure protection

Circuit breakers are strategically located in power systems to connect circuits and electrical apparatus. Circuit breakers are commanded to open and close by protection and control systems that monitor conditions on the power system. Protective relay systems detect abnormal conditions, most notably, system faults (short circuits), and direct one or more circuit breakers to open to isolate the faulted circuit or equipment. Protection systems are coordinated so that the circuit breaker(s) nearest the fault are opened to interrupt, or clear,

Copyright © 2006 IEEE. All rights reserved.

Copyright The Institute of Electrical and Electronics Engineers, Inc.
Provided by IHS under license with IEEE
No reproduction or networking permitted without license from IHS
Not for Resale

the fault with minimum impact to the remainder of the power system. This critical operation requires that the circuit breaker interrupt, or clear, fault current.

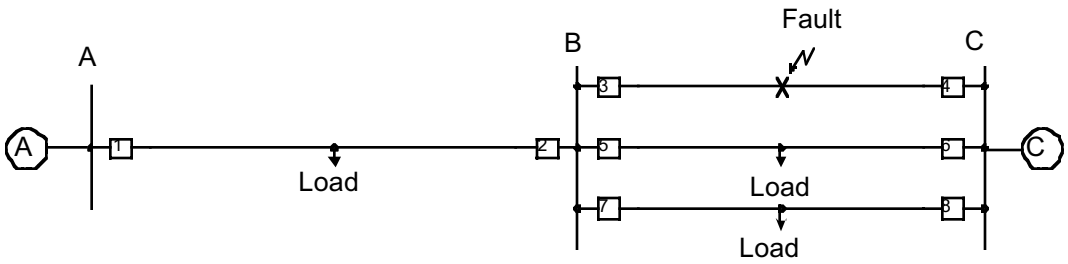

Figure 1—Local and remote breaker clearing

While infrequent, circuit breakers occasionally fail to trip, or fail to clear a fault. Depending on the power system network topology other circuit breakers must then be called upon to trip and isolate the sources contributing to the fault. Referring to Figure 1, assume a fault exists between breaker 3 and breaker 4. Protective relays associated with breaker 3 and breaker 4, designed to detect faults on the line between these breakers, operate and command breaker 3 and breaker 4 to trip. In this example, breaker 3 fails to interrupt the fault current. Therefore, all sources that continue to supply fault current through breaker 3 must be interrupted. Assuming sources at stations A and C, locally, breakers 2, 5, and 7 must be opened, or remotely, breakers 1, 6, and 8 must be opened.

To implement remote breaker failure backup protection for breaker 3, the protective relays at breakers 1, 6, and 8 must have overreaching elements that sense faults anywhere on the line between breaker 3 and breaker 4, and operate after a time delay, typically about 0.5 seconds. This time delay is required to allow time for the local line protection on breaker 3 to operate, and for the breaker to successfully clear the fault, recognizing that the local protective relay scheme on breaker 3 may include time delayed tripping to coordinate with other protective relays. Remote backup protection does not have the benefit of knowing exactly when the breaker is commanded to open. Therefore, the remote backup protection must include sufficient time delay to accommodate all possible tripping delays.

Local breaker failure protection, on the other hand, receives a signal directly from the line protection relays at the same station as the impaired breaker, indicating when the trip command is sent to the breaker. The local breaker failure protection only needs to wait for the breaker to successfully clear the fault. If local breaker failure protection for breaker 3 detects a breaker failure, it commands breakers 2, 5, and 7 to trip to clear the fault.

Remote backup, therefore, has several disadvantages:

a) All tapped loads between breakers, 1-2, 5-6, and 7-8 are dropped causing widespread customer outages.

b) The lengthy backup clearing time will cause excessive system voltage dip duration, additional damage to faulted equipment, possible damage to unfaulted equipment, and may lead to system instability.

c) Due to possible infeed effects from the other lines, it may be difficult to set the relay at 1 to detect faults on the entire length of the adjacent lines.

d) The settings required at 1 to provide sufficient reach to detect faults out to the remote ends of the adjacent lines may be so sensitive that the line is susceptible to tripping under heavy load during extreme disturbances, which could initiate or exacerbate a wide-area cascading outage.

The advantage of remote breaker failure protection is that it is completely independent of protective relays, control systems, and battery supplies at the station with the failed breaker.

Copyright © 2006 IEEE. All rights reserved.
Copyright The Institute of Electrical and Electronics Engineers, Inc.
Provided by IHS under license with IEEE
No reproduction or networking permitted without license from IHS
Not for Resale

An alternative to remote backup is local backup, and its subset breaker failure relaying. Local breaker failure protection eliminates the disadvantages of remote backup protection. Using the example in Figure 1 again, when the protective relay on breaker 3 senses a fault on line 3-4 and issues a trip to breaker 3, local breaker failure protection starts a timer. If the timer times out, and the fault is not cleared by breaker 3, then the local breaker failure scheme sends trip signals to adjacent breakers 2, 5, and 7. The local breaker failure scheme has several benefits over the remote backup scheme. If there are sources at buses A and C, tapped loads between breakers 1-2, 5-6, and 7-8 can still be served. The total clearing time for the fault is reduced substantially compared to the remote backup method. The timer setting for the local breaker failure scheme is composed of breaker interrupting time plus some margin. Margins have been used from less than 1 cycle to 3 cycles as dictated by the critical fault clearing time. Protective relay time is not included in this time delay. This timer setting is typically less than 12 cycles, compared to 30 cycles for remote backup. This time difference could mean the difference between a stable and unstable system for some critical faults and may substantially reduce the extent of damage at the fault. The primary disadvantage of local breaker failure protection is that it may suffer from common-mode failure. Station battery failure, for example, that may be the original cause of the breaker failure condition, may also disable the local breaker failure protection. Likewise, local protective relay malfunction may cause a failure to trip the breaker, and also fail to initiate the local breaker failure timer. The cost of separate breaker failure relays, while once a major consideration, has been significantly reduced as the breaker failure function has been integrated into modern microprocessor based protective relay schemes.

There are many things that may cause the failure of a circuit breaker to interrupt fault current. If a defective trip coil or trip circuit is the cause for the failure, slow clearing of the fault will not cause further damage to the breaker. However, some common causes for the failure to interrupt are that the breaker mechanism travel is incomplete or the mechanism is slow; components needed for the interruption: (resistors or capacitors), are faulty; or the dielectric material in the interrupter is out of specification (low pressure, low temperature) or contaminated. If these are the causes for the failure to interrupt, the breaker needs protection to prevent further damage. By the time the remote backup protection has operated, the arcing inside the interrupter will likely cause a phase-to-ground fault internal to the breaker. These internal faults may lead to explosions and fires. As a result of the slow clearing of the original fault, what could have been a minor breaker repair project, if the faulty breaker had been isolated in a timely manner, now may require the replacement of the breaker and possibly other equipment in close proximity to the faulty breaker.

5. Backup protection

5.1 Introduction

Electric utilities use different approaches when applying breaker failure protection. Fault clearing speed requirements are evaluated in terms of the dynamic stability of the power system. For fast fault clearing time, the local breaker failure protection is provided with communication channels to directly transfer trip the breakers at the remote terminal(s), thus eliminating additional delays imposed by the remote backup protection.

5.2 Backup protection considerations

An ideal backup protection scheme should be completely independent of the primary protection, and based on prior discussion, it can be seen that local backup protection is faster and more effective at limiting damage than remote backup protection schemes. To provide ideal local backup protection it would then be necessary to have physically and electrically independent relays fed by physically separate instrument transformers that use redundant but separate battery systems to operate a system where each circuit breaker had an equivalent backup circuit breaker immediately electrically adjacent. While these features may be

Copyright © 2006 IEEE. All rights reserved.

Copyright The Institute of Electrical and Electronics Engineers, Inc.
Provided by IHS under license with IEEE
No reproduction or networking permitted without license from IHS
Not for Resale

included in the design of any given substation, the cost and space requirements of ideal local backup protection can be limiting and the use of backup breakers can be generally prohibitive.

A reasonable level of local backup protection is accomplished by employing fully duplicated tripping systems, independent and galvanically isolated, operating in a one-out-of-two tripping arrangement, with each tripping system initiating circuit breaker failure protection. Local breaker backup in the form of breaker failure protection can then be depended upon to fulfill the function of the independent breaker by operating adjacent breakers to clear the fault.

In general, where local breaker failure relaying is deemed required, protection systems failure should not be a cause of breaker failure. That is, redundant relaying systems, as independent as practical, should be provided. Each system may operate separate or both breaker trip coils, either directly or indirectly.

5.3 Breaker failure protection

There are several methods used to provide breaker failure protection, such as the following:

a) Timer initiation from the tripping relay contact

b) Monitoring reset of the tripping relay contact

c) Monitoring reset of an over-current element (fault detector)

d) Monitoring reset of the circuit breaker auxiliary contact

Breaker failure logic can also be achieved using breaker auxiliary switches to supplement or replace current detectors. These breaker auxiliary switches are operated by mechanical or hydraulic linkages to indicate the position of the circuit breaker's main contacts. Sole use of auxiliary contacts may prove unreliable in cases where the breaker main contacts physically open but fail to interrupt the current, or if the auxiliary switch fails to operate because of mechanical problems (broken switch linkage, welded contacts, frozen switch, etc.). However, breaker failure applications associated with high-impedance power system apparatus, such as generators and transformers, may have such low currents associated with internal faults, that breaker auxiliary switches provide the only practical method to indicate that the breaker is open.

The circuit breaker failure protection function may be implemented using separate hardware, or may be integrated within the same hardware as the primary or backup protection functions. The circuit breaker failure protection is required for both single- and three-phase tripping.

Setting the circuit breaker failure logic time delay long enough to permit successful fault clearing by the circuit breaker, as well as including a safety margin will ensure the scheme does not operate needlessly. This delay may be independently set for single- and three-phase tripping, or single-phase and multi-phase faults. The logic should not require that either delay setting be significantly longer than the other.

The circuit breaker failure protection may or may not rely on the resetting of the initiate input signal to recognize successful opening of the circuit breaker. Some breaker failure schemes seal in the initiate input relay through one or more current detectors to indicate successful circuit breaker operation. Other schemes may employ a combination of current detectors and breaker auxiliary switches to detect successful breaker operation.

The circuit breaker failure protection may issue a re-trip signal to the circuit breaker before issuing a breaker failure output with sufficient margin such that successful opening of the circuit breaker will prevent an undesired breaker failure output. This re-trip signal may be for three-phase tripping only, or for individual breaker poles for selective single-phase tripping. If integrated within the same hardware device as the initiating protection function, this trip signal may be issued via separate output contacts from those with which the device issued the initial trip output.

Copyright © 2006 IEEE. All rights reserved.
Copyright The Institute of Electrical and Electronics Engineers, Inc.
Provided by IHS under license with IEEE
No reproduction or networking permitted without license from IHS
Not for Resale

Circuit breaker failure operation may be required for conditions where there is little or no measurable fault current. If sufficient current is not present on initiation, then the circuit breaker can be monitored by auxiliary contacts to establish breaker position.

For single-phase tripping, monitoring the current or circuit breaker status of only the phase being tripped will give the circuit breaker failure logic the proper information for operation.

5.4 Summary

Circuit breaker failure protection provides a fundamental component of the local backup protection. In order to ensure initiation of circuit breaker failure protection every time a protective relay trip signal is issued to the circuit breaker, the circuit breaker failure protection may also be duplicated, one per protection system. To implement this in the most cost effective manner, the circuit breaker failure protection may be integrated within the same hardware as the primary and backup protection schemes.

Single- and three-phase circuit breaker failure functionality is generally required as part of a single- and three-phase tripping protection scheme.

It is important to minimize breaker failure time-delay settings, while not jeopardizing the correct operation or reducing the security of the circuit breaker failure scheme. Minimum breaker failure delay times should be applied for all fault types (single- and three-phase tripping) to enhance system stability, limit equipment damage, improve coordination of overlapping protection schemes, and to improve quality of supply by minimizing the duration of power system voltage dips. The requirement for a high-speed current detector reset capability on fault clearing is consistent with minimized breaker failure trip time-delay settings.

Due to its severity, a trip initiated by the breaker failure protection must only be performed if absolutely necessary. Every effort must first be made to successfully trip the circuit breaker. Redundancy in the breaker tripping paths should be employed.

The no (low) current detection option is typically restricted to those conditions where a trip signal is issued to the circuit breaker when the current is below the circuit breaker failure current detection threshold, e.g.; weak or zero in-feed trips, overvoltage trips, etc. Current supervision is the most secure and reliable method of detecting successful opening of the circuit breaker. Circuit breaker auxiliary contact supervision of breaker failure operation should only be used in those cases where the current is below the set threshold. It is expected that, for all trip outputs from the protection system(s) that initiate the circuit breaker failure protection, the circuit breaker failure protection must determine the presence of or lack of current. If current is present, current detection must be applied for the full duration of the fault event.

6. Breaker failure modes

Breaker failure protection is designed to operate when the protective relaying scheme initiates a circuit breaker trip and that breaker does not correctly interrupt the fault. The breaker failure condition is also known as “stuck breaker”. Breaker failure protection will be considered a subset of local backup protection. Breaker failure can be caused by a variety of situations, as noted below:

— *Failure to Trip*: In failure to trip situations, the breaker contacts do not open after the trip circuit has been energized by the protective scheme. This could be caused by an open or short in the trip circuit wiring or in the trip coil. It could also be the result of a mechanical problem in the breaker that prevents the contacts from opening.

— *Failure To Clear*: In these scenarios the breaker contacts open, but the arc is not extinguished and current continues to flow. This could be caused by mechanical problems (incomplete opening), or dielectric problems (such as contaminated oil or loss of vacuum). Failure to clear is significantly

Copyright © 2006 IEEE. All rights reserved.

Copyright The Institute of Electrical and Electronics Engineers, Inc.
Provided by IHS under license with IEEE
No reproduction or networking permitted without license from IHS
Not for Resale

different from failure to trip in that the breaker auxiliary contacts (52a and 52b) will change state indicating breaker opening. Because of this, an auxiliary contact position may not be a reliable indicator of a satisfactory breaker opening.

Another failure to clear mode can occur in breakers with opening resistors. In this mode the resistor insertion contact operates successfully, but the main contacts fail. This results in a high impedance to current flow, but does not interrupt the flow of current.

Both breaker failure modes can occur during high-current and low-current faults, including transfer trip from remote locations.

There are also situations where a circuit breaker operates incorrectly, but is not classified as a breaker failure. These situations should be considered in system design, and may be incorporated within the breaker failure protective scheme.

— *Loss of Dielectric* during non-fault conditions can prevent satisfactory interruption of current if called upon, potentially leading to a true breaker failure. Loss of dielectric pressure can be detected in SF_6 breakers using a gas density or pressure monitors. For complete loss of pressure, breaker manufacturers typically recommend blocking the breaker tripping to prevent mechanical or electrical failure. In this case, the breaker failure scheme can be armed, so that it will operate.

— *Contact flashover* in an open breaker can lead to catastrophic failure. This could be caused by a restrike of an opening breaker or a surge through an already open breaker that produces dielectric breakdown across the contacts.

— *Failure of a circuit breaker to close* when called upon is not defined as a stuck breaker condition, since it is not associated with a protective relay trip. This can, however, have significant impact on the power system and may need to be considered in the operating scheme. Many reclosing schemes include failure to close logic.

— *Non-fault related failures* are also possible. An example would be failure to interrupt load current, or mechanical failure during switching operations. Though not technically breaker failure conditions, these types of failures can be addressed within more complex stuck breaker schemes.

Numeric relays have the ability to identify impending failure of a circuit breaker. This can be accomplished by identifying degraded performance, such as changes in operate or clearing times. These schemes can also track predictive quantities such as accumulated interrupted current or number of operations.

Breakers with single-phase tripping present additional constraints for breaker failure protection.

7. Breaker failure protection schemes

This clause describes breaker failure schemes that have received acceptance by the industry and are used in utility power systems. Schemes are illustrated using logic diagrams. Many of the schemes could also be illustrated by using conventional dc control schematics.

Copyright © 2006 IEEE. All rights reserved.
Copyright The Institute of Electrical and Electronics Engineers, Inc.
Provided by IHS under license with IEEE
No reproduction or networking permitted without license from IHS
Not for Resale

7.1 Basic breaker failure scheme

Basic breaker failure protection provides a means to trip adjacent current sources if a fault is detected by protective relays and the associated breaker(s) fail to interrupt the fault. Figure 2 is a logic diagram showing a basic breaker failure scheme. Figure 3 shows a typical timing chart for this scheme.

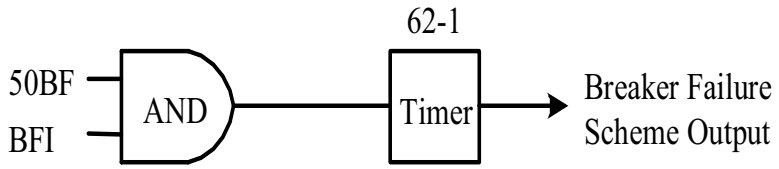

Figure 2—Basic breaker failure scheme

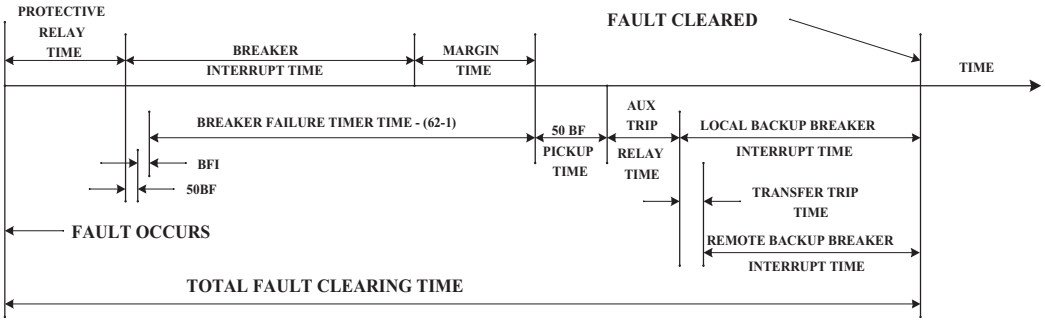

Figure 3—Fault clearing timing chart

Two conditions are used to monitor proper breaker operation during a fault clearing operation. These are:

1) The presence of current flow in the breaker (50BF) and
2) A protective relay trip signal (BFI).

The breaker has failed to operate properly if both of these signals are present for a period greater than the expected breaker clearing time. A delay on pickup timer (62-1), with a time-delay setting that exceeds the breaker normal clearing time, is used to determine successful operation of the breaker. If the breaker operates properly, either one or both of the 50BF or BFI inputs will de-assert and stop operation of the timer.

When a breaker failure scheme operates (breaker failure timer times out), a number of actions are initiated by the scheme. Depending on design philosophy, the number of contacts required, the interrupting rating of the output contacts or relay targeting requirements, auxiliary devices may be used. Often, a lockout relay (86BF) is used as an auxiliary device.

Copyright © 2006 IEEE. All rights reserved.

Copyright The Institute of Electrical and Electronics Engineers, Inc.
Provided by IHS under license with IEEE
No reproduction or networking permitted without license from IHS
Not for Resale

7.2 Basic breaker failure with re-trip logic

When a fault has not been cleared for a period greater than the expected breaker clearing time, the breaker has failed to operate properly. A re-trip design provides a second opportunity for a breaker to trip before a breaker failure is declared, and can be used to inform maintenance personnel that breaker inspection may be beneficial should the breaker successfully open. For circuit breakers with two separate trip coils, the scheme could be designed to activate the re-trip if one of the trip coils fails to function properly. The re-trip logic can be utilized to energize the second trip coil and open the breaker before a breaker failure condition is declared.

Figure 4 illustrates the addition of re-trip logic. The re-trip time-delay-on-pickup setting (62-2) must be coordinated with the breaker failure timer (62-1). The operating speed of the output contacts used for re-trip should be accounted for in the overall time-delay settings, since slower speed output contacts may be used for re-trip activation. The operating speed of the breaker should also be considered in arriving at the margin between re-trip (62-2) and breaker failure (62-1) timer settings. For inherently slow clearing breakers, the coordination between the re-trip and breaker failure timers should be considered, and additional system stability and protection coordination studies may be required if the breaker failure timer is to be extended.

The re-trip design logic is generally independent of the normal breaker tripping scheme, which is activated following fault detection. When the breaker failure scheme has internal sequence of events recording, the information can be used to determine whether the breaker operation occurred by the re-trip circuit as opposed to the tripping on the initial fault detection.

If the breaker is tripped by the re-trip logic, it is possible that something was wrong with the initial trip path. Breaker tripping by the re-trip output can be set to block automatic breaker reclosing to allow maintenance inspection to find the problem.

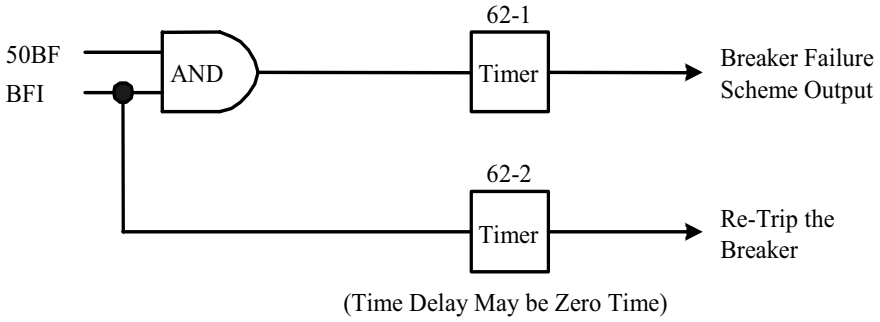

Figure 4—Breaker failure re-trip

Re-trip logic may not be desirable in some cases for security reasons. For example, the re-trip logic may be viewed as more of a risk for a false trip than an improvement to reliability in applications with redundant protection schemes. Re-trip logic that may react to transients or temporary dc grounds must be avoided. The contact change-of-state recognition time should be greater than the length of any expected dc transient. A one quarter cycle delay should be sufficient. The pickup level of an input circuit should also be high enough to be secure for a battery ground situation. An input pickup level greater than one half the battery voltage is recommended.

Copyright © 2006 IEEE. All rights reserved.
Copyright The Institute of Electrical and Electronics Engineers, Inc.
Provided by IHS under license with IEEE
No reproduction or networking permitted without license from IHS
Not for Resale

7.3 50BF reset time

In strong systems and in power plant switchyards where very short critical clearing times are a major concern, adequate reset time for the 50BF current detector may not be easily achievable when using the scheme shown in Figure 2. A slightly different scheme is shown in Figure 5. Current detection by the 50BF begins only after the 62-1 timer has timed out. The theory is that current detector pickup time is generally shorter and more predictable than dropout time; this is especially true with electromechanical relays. In microprocessor schemes the difference between the current detector pickup and drop out times can be negligible. Also, if the breaker has normally interrupted the current by the time the 62-1 timer times out, then the reset time of the 50BF is not an issue. Eliminating the 50BF reset time significantly reduces the margin requirements. If the breaker fails to interrupt the fault current, the 50BF is allowed to pickup and produce a breaker failure output.

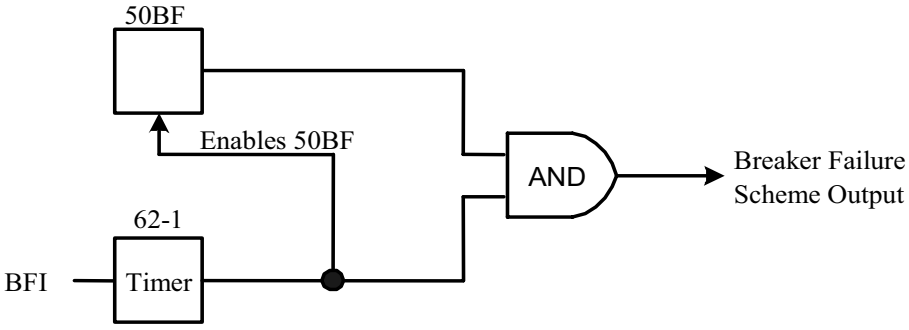

Figure 5—Elimination of 50BF reset time

Figure 6 is a timing diagram for the scheme shown in Figure 5.

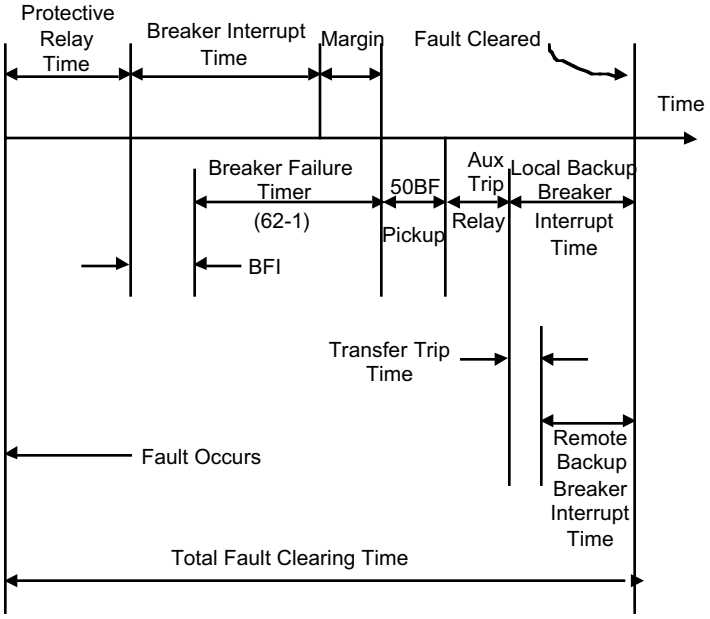

Figure 6—Alternate scheme fault clearing timing chart

Copyright © 2006 IEEE. All rights reserved.

Copyright The Institute of Electrical and Electronics Engineers, Inc.
Provided by IHS under license with IEEE
No reproduction or networking permitted without license from IHS
Not for Resale

Regardless of current detector dropout issues, the logic shown in Figure 5 has an advantage in multi-breaker line protection schemes, such as ring bus and breaker-and-one-half schemes, where current in one breaker may be insufficient to pick up the current detector until the other breaker trips. This logic permits the breaker failure timer (62-1) to start timing with only the BFI input, eliminating the delay that might occur if the current detector input (50BF) were also required to start the breaker failure timer, as in Figure 2.

An enhancement to this scheme, shown in Figure 7, is a control timer, which increases security by limiting the window of time for producing a BF output to a short period following a BFI signal. (See 9.2 for setting considerations for this timer.)

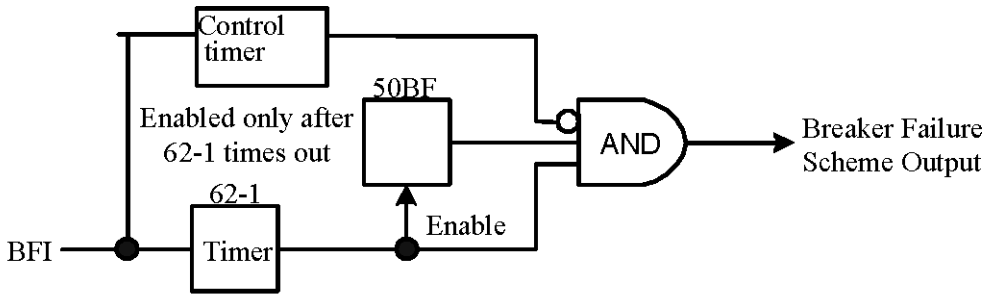

Figure 7—Addition of control timer

7.4 Two-step timing arrangement

Multi-phase faults have a greater adverse impact on power system stability than single phase-to-ground faults. Critical clearing times and resulting breaker failure time delay requirements for multi-phase faults are therefore shorter than for single phase-to-ground faults. To reduce breaker failure operating times for multi-phase faults, and to provide more relaxed breaker failure time delays for single phase-to-ground faults, some users employ dual-timer breaker failure schemes that distinguish between these two types of faults. Figure 8 details the logic necessary for this approach. Individual phase current detectors (50BF-A, 50 BF-B, and 50BF-C) are connected to two different logic gates. The “2 of 3” AND gate will only allow operation of the faster 62-1 (multi-phase) timer if at least two phases have been faulted. The 62-2 (single-phase) timer, generally set with a longer time delay than 62-1, operates for all single-phase and multi-phase faults. With this approach, the shorter time-delay setting is used only when multi-phase faults have occurred.

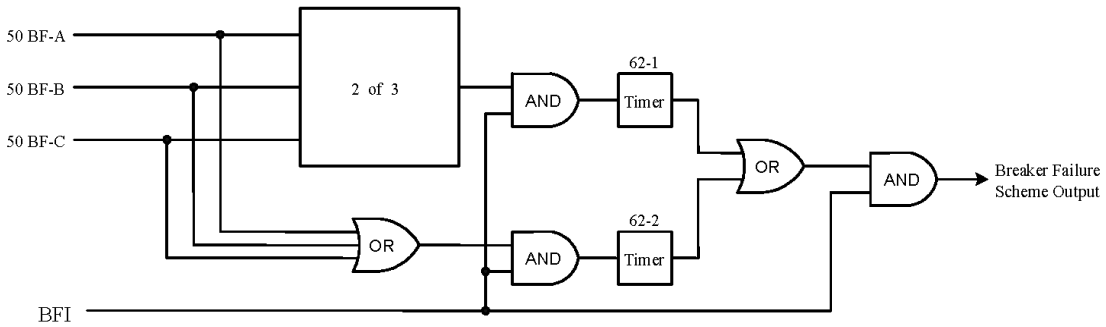

Figure 8—Two-step timing arrangement

Copyright © 2006 IEEE. All rights reserved.
Copyright The Institute of Electrical and Electronics Engineers, Inc.
Provided by IHS under license with IEEE
No reproduction or networking permitted without license from IHS
Not for Resale

7.5 Breaker failure initiate (BFI) seal-in

There are good reasons to use the breaker failure initiate seal-in function provided on modern breaker failure relays. Some high-speed relays do not seal-in the trip output, and fault conditions can evolve with time such that the trip output may not be present for the full breaker failure relay time delay. Modern breaker failure relays can use either one of two seal-in scheme configurations.

The first scheme, shown in Figure 9, requires that the current detector be picked up continuously for the breaker failure timer (62-1) to time out. Thus, the current detector (50BF) must continue to be energized even if the initiating relay (BFI input) momentarily resets. The breaker failure timer must have sufficient margin to allow the reset of the current detector for normal breaker clearing.

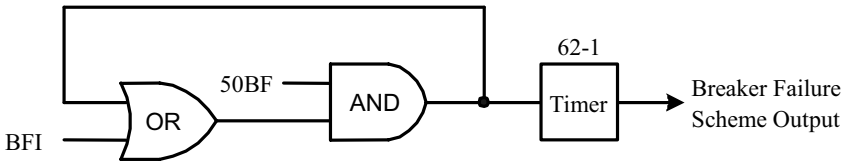

Figure 9—Breaker failure seal-in

The second scheme does not enable the current detector until the breaker failure time has elapsed, as shown previously in Figure 6. For multi-breaker bus arrangements, such as breaker-and-one-half, ring bus, and double-breaker double-bus configurations, the current distribution through the breakers can be substantially different. In this scheme, the BFI seals-in independently and starts the breaker failure timer (62-1) without regard to the initial current level through the breaker. Thus, after the first breaker trips and the breaker failure time has elapsed, there is enough current in the failed breaker to pick up its current detector and immediately provide a breaker failure output. The breaker failure time delay is not dependent on the slow or intermittent pickup of the current detector.

7.6 Minimal current scheme

Transformer and generator faults, and faults in harmonic filters, may not be of sufficient magnitude to pick up a breaker failure current detector (50BF). Figure 10 shows a breaker 52a contact that has been added in parallel with the 50BF input. With this addition, the scheme will operate properly for low-magnitude faults because both the dropout of the 50BF current detector and the opening of the 52a breaker auxiliary contact are necessary to interrupt the 62-1 breaker failure timer. While operation of the auxiliary switch might properly indicate that the breaker mechanism has operated, it is not sufficient indication that the circuit breaker has interrupted the fault current. Timing of the auxiliary contacts and the breaker main contact may be checked at regular intervals to ensure they are within specifications.

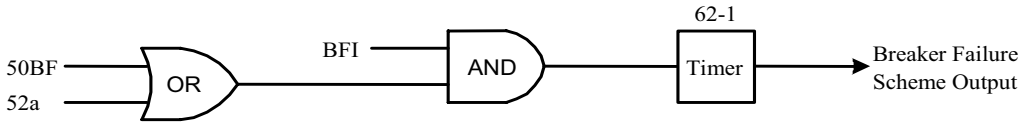

Figure 10—Minimum fault current scheme

Copyright © 2006 IEEE. All rights reserved.

Copyright The Institute of Electrical and Electronics Engineers, Inc.
Provided by IHS under license with IEEE
No reproduction or networking permitted without license from IHS
Not for Resale

7.7 Fast 52aa, dual timer breaker failure scheme

Figure 11 depicts a dual timer breaker failure scheme with 52aa, and 50BF reset checks. The logic includes a breaker failure initiate (BFI) input that starts two timers when external fault detecting relays issue a trip command to the breaker. The scheme operates as follows:

— Timer 62-1 has a short time delay, based on expected breaker mechanism operating time, plus a safety margin. The timer operation is enabled by a fast 52aa contact that is driven by the breaker operating mechanism. The 52aa contact is adjusted to open as soon as the breaker operating mechanism begins its motion to open the breaker. Opening the 52aa contact stops and resets timer 62-1. If timer 62-1 expires because the 52aa contact remains closed, the logic initiates breaker failure output.

— Timer 62-2 has an intermediate time delay based on expected breaker current interrupting time plus a safety margin. The timer operation is enabled by current detectors (50BF) that dropout (reset) when the breaker contacts interrupt fault current. Current detector dropout stops and resets timer 62-2. If timer 62-2 expires because the current detectors remain picked up, the logic initiates breaker failure output.

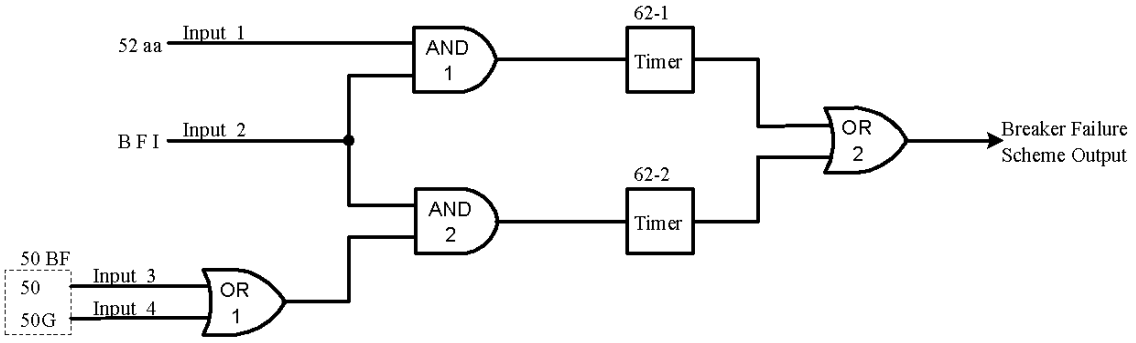

Figure 11—Dual timer with 52aa and 50BF reset

7.8 Triple timer breaker failure scheme

Figure 12 depicts a triple timer breaker failure scheme with 52aa, 50BF, and 52a reset checks. The logic includes a BFI input that starts three timers when external fault detecting relays issue a trip command to the breaker. Each timer logic circuit has a seal-in to continue timing if the BFI input drops out prematurely. The scheme operates as follows:

— Timer 62-1 has the shortest time delay of the three, based on the expected breaker mechanism operating time, plus a safety margin. The timer operation is enabled by a fast 52aa contact that is driven by the breaker operating mechanism. The 52aa contact is adjusted to open as soon as the breaker operating mechanism begins its motion to open the breaker. Opening the 52aa contact stops and resets timer 62-1. If timer 62-1 expires because the 52aa contact remains closed, the logic initiates breaker failure output.

— Timer 62-2 has an intermediate time delay based on expected breaker current interrupting time plus a safety margin. The timer operation is enabled by current detectors (50BF) that dropout (reset) when the breaker contacts interrupt fault current. Current detector dropout stops and resets timer 62-2. If timer 62-2 expires because the current detectors remain picked up, the logic initiates breaker failure output.

— Timer 62-3 has the longest time delay of the three, based on expected overall breaker operating time, plus a safety margin. The timer operation is enabled by a 52a contact that, preferably, is driven by a direct link with the breaker interrupting contacts. Opening the 52a contact stops and resets timer

Copyright © 2006 IEEE. All rights reserved.
Copyright The Institute of Electrical and Electronics Engineers, Inc.
Provided by IHS under license with IEEE
No reproduction or networking permitted without license from IHS
Not for Resale

62-3. If timer 62-3 expires because the 52a contact remains closed, the logic initiates breaker failure output. This relatively slow breaker failure logic supplements the other two stages of the breaker failure logic for breaker failure operations where the operating mechanism operated, but the main contacts did not, and the breaker current was below the pickup on the 50BF current detectors.

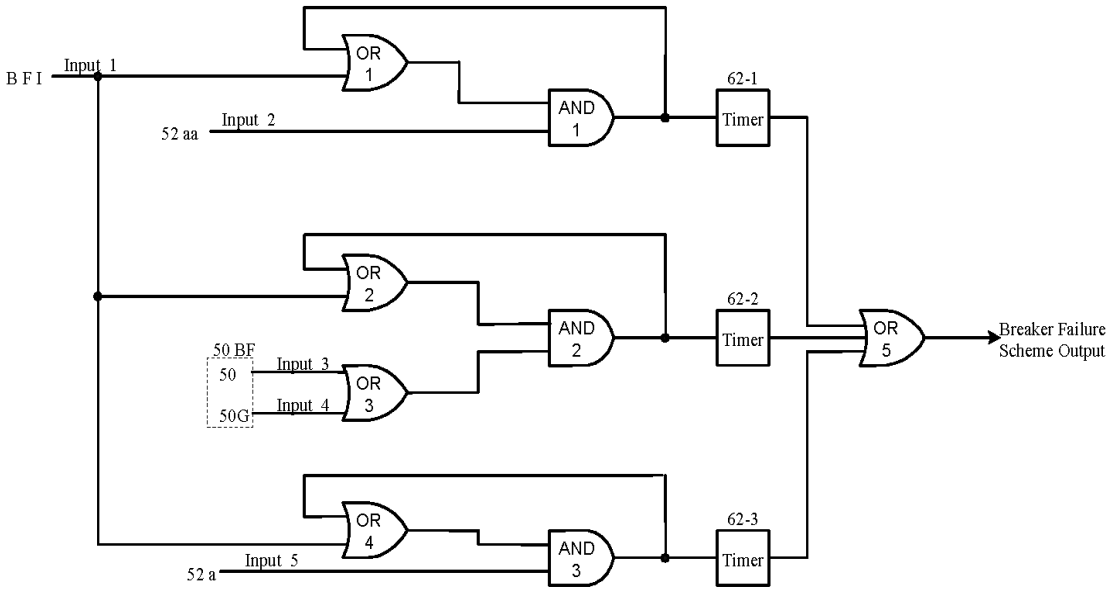

Figure 12—Triple timer with 52aa, 50 BF, and 52a reset

7.9 Single-phase re-trip logic

When single-phase tripping is applied, some utilities may choose to use one set of trip coils for single-phase tripping and another set for three-phase tripping. Both the primary and secondary line protection sets are connected to trip only one set of trip coils. Breaker manufacturers provide the second set of trip coils as a redundant means to actuate the breaker tripping mechanism. The re-trip feature is then relied upon to provide necessary redundancy for control circuit and trip coil failures. The breaker failure relay must measure a separate initiate for each phase and must provide three individual re-trip outputs. This is illustrated in Figure 13. Where individual contacts trip the breaker three-phase, such as a lockout relay, then a fourth initiate input and a three-phase re-trip output may be included in the scheme. On systems where delayed tripping is undesirable, no intentional delay is added to the re-trip function.

Copyright © 2006 IEEE. All rights reserved.

Copyright The Institute of Electrical and Electronics Engineers, Inc.
Provided by IHS under license with IEEE
No reproduction or networking permitted without license from IHS
Not for Resale

.

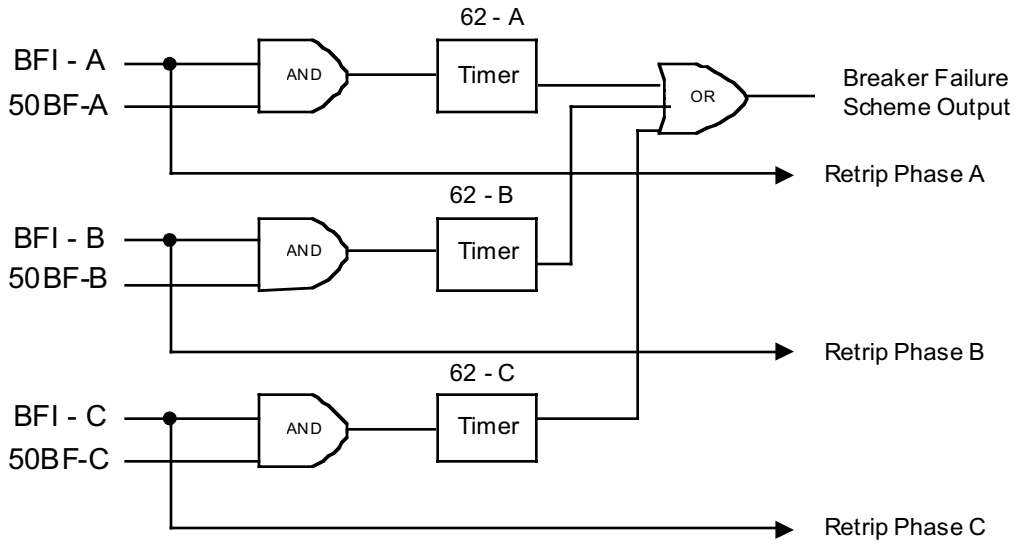

Figure 13—Single phase re-trip

7.10 Breaker failure timer bypass scheme

This scheme prevents unnecessary delay if prior knowledge of the breaker operating status is known.

Gas breakers are blocked from operating when SF_6 gas pressure falls below a specified value. A pressure switch contact, provided by most of the manufacturers, is used in the breaker failure relay scheme to indicate the status of the breaker. Under block close/trip conditions, the breaker failure initiate contact operates the breaker failure output without any time delay if the overcurrent element (50BF) is picked up. The pressure contact status input is delayed to prevent operations due to transients.

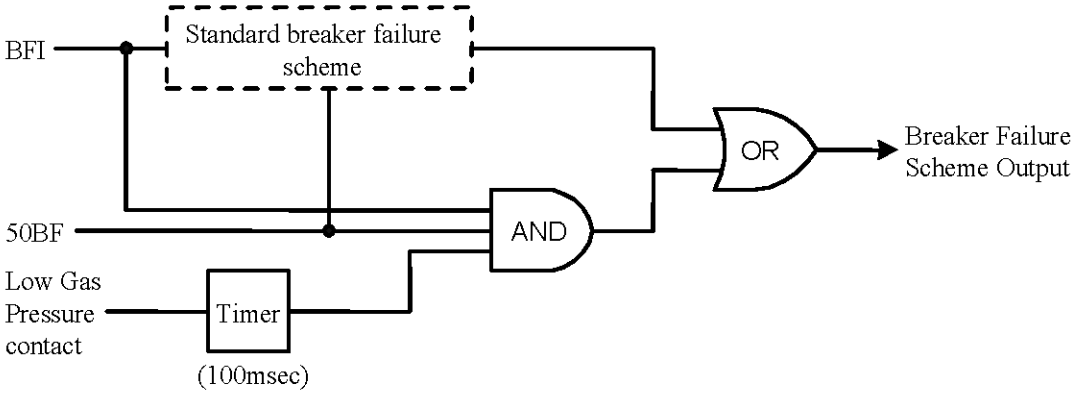

Figure 14—Breaker failure timer bypass scheme

Copyright © 2006 IEEE. All rights reserved.
Copyright The Institute of Electrical and Electronics Engineers, Inc.
Provided by IHS under license with IEEE
No reproduction or networking permitted without license from IHS
Not for Resale

7.11 Multiple schemes within a relay

With the use of programmable relays, several breaker failure schemes can be programmed with the bypass scheme in one relay. One such application is as shown in Figure 15.

The first scheme [comprised of a control timer, AND gates 1 and 2, and breaker failure timer (62-1)] is similar to schemes discussed in 7.3. Though this scheme will not delay operation in breaker-and-one-half or ring bus configurations, it is disabled after the control timer times out and the initiating contact fails to reset. The second scheme is comprised of AND gate 4 and breaker failure timer (62-2), and will provide redundancy to the first scheme.

Both breaker failure timers are set to same delay. Control timer setting is discussed in 9.2. The third scheme comprised of AND gate 3, will initiate a breaker failure output directly without any additional time.

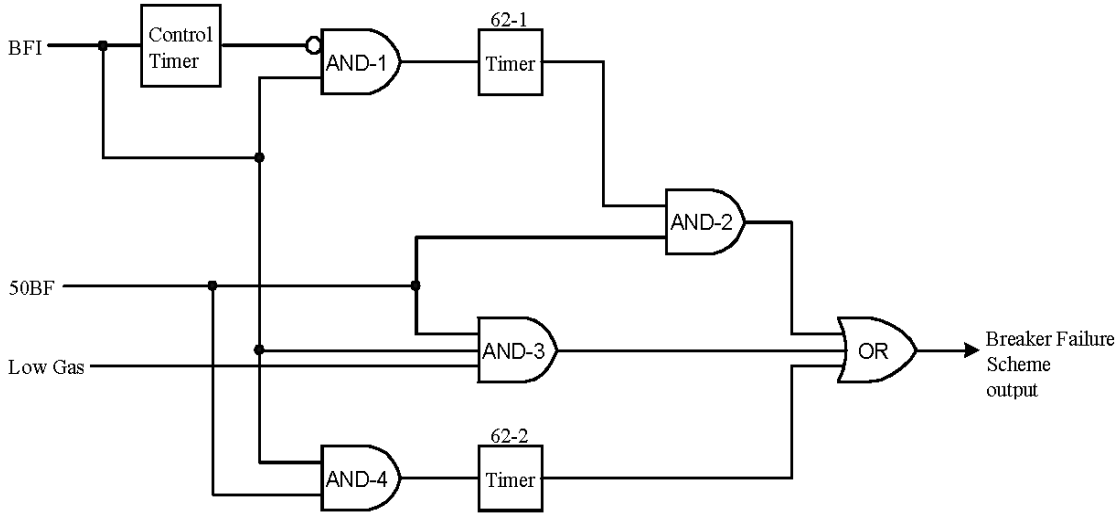

Figure 15—Multiple scheme breaker failure

7.12 Dual breaker alternative

In those cases where stability studies show that the critical clearing time is less than the shortest backup clearing time attainable with high-speed breaker failure protection schemes, the only solution may be to install two identical breakers in series, with both breakers being tripped simultaneously by the protection schemes. With this arrangement, and fully redundant protection schemes, instrument transformers, and control power sources, it can be assumed that at least one of the breakers will successfully interrupt the fault. Thus, the total clearing time will be the same as the primary clearing time, and no breaker failure scheme is necessary.

8. Breaker failure design considerations

Breaker failure schemes are normally activated by the protective relays or systems used for equipment protection such as bus, line, transformer, or capacitor. The overall performance and proper operation of the local breaker failure protection scheme is critical in terms of isolating the problem and preventing cascading effects elsewhere in the system.

Copyright © 2006 IEEE. All rights reserved.

Copyright The Institute of Electrical and Electronics Engineers, Inc.
Provided by IHS under license with IEEE
No reproduction or networking permitted without license from IHS
Not for Resale

Breaker failure schemes are employed wherever failure of a breaker to operate or interrupt has an unacceptable impact on the system. It traditionally has been applied on the high-voltage system and is increasingly being applied at all voltage levels. The breaker failure scheme may require the use of a communications channel for the tripping of local or remote breakers.

Some of the factors influencing the proper operation of the breaker failure protection involve the design of the breaker failure scheme. Typical design considerations for breaker failure protection schemes include:

- Scheme operation should only occur when expected and desired.
- Scheme operation should be independent of the types of failures detected in the breaker. For example, the failure mode of the breaker trip coil (either failed open or shorted) should not affect the scheme's ability to detect the failed breaker and to properly isolate it from the power system.
- Scheme operation during loss of the direct current (dc) source to the failed breaker.
- Sufficient overlapping of protection and isolation switches to allow maintenance and overall testing of the scheme.
- Proper application of auxiliary tripping relays, when applicable.
- Selection of properly rated inputs and outputs when the breaker failure is integrated as part of the equipment protection package and when user selectivity in rating is provided.
- Proper application of dc circuits and avoidance of mixing supply sources.
- Minimizing the impact of dc transients.

An independent breaker failure system should use a dc source that is different than the dc source used for the breaker control or bus differential scheme. Care should be exercised to avoid mixing of dc sources to minimize the impact of floating sources activating the breaker failure scheme unnecessarily; however, it is not necessary to use a separate station battery to supply the breaker failure system. The dc source for each of the breaker failure, breaker control, or bus differential schemes should consist of a separate fused dc circuit. The use of properly rated diodes or separate but functionally equivalent output contacts set to activate breaker trip and breaker failure circuits independently will minimize exposures to mixing of the dc sources. The possibility of inadvertently tying dc sources together is reduced when the breaker failure function is integrated as part of the protective relay; however, both the primary and secondary relays should have this function included so that loss of one relay does not also disable breaker failure.

The breaker failure dc circuit should be monitored to detect loss of the dc supply. The impact of transient voltages on relays with internal power supplies should also be evaluated in the application of the dc source for breaker failure relays.

The bus configuration may support sharing of the dc source for multiple breaker failure relays provided that the dc source is properly selected. The design should be such that a single component failure does not result in the loss of the ability to trip and the loss of breaker failure protection.

The breaker failure design can include a re-trip circuit, or re-trip logic in the case of microprocessor devices. The re-trip function is intended to give the breaker a second chance to open prior to the breaker failure scheme timing out. A properly designed breaker failure scheme should alarm the maintenance personnel that a breaker operation occurred by the re-trip circuit as opposed to normal opening of the breaker.

The selection and application of breaker failure auxiliary tripping devices is also critical, particularly during commissioning stages or during maintenance intervals when scheme verification needs to be performed without tripping energized equipment. The scheme testing procedures and design should allow for the auxiliary tripping relay coil to be energized with the trip isolation switches open without damaging the auxiliary relay. Otherwise, care should be exercised to ensure complete isolation of the auxiliary tripping relay coil to avoid its failure during testing.

--`,,```,,,,````-`-`,,`,,`,`,,`---
Copyright © 2006 IEEE. All rights reserved.
Copyright The Institute of Electrical and Electronics Engineers, Inc.
Provided by IHS under license with IEEE
No reproduction or networking permitted without license from IHS
Not for Resale

Factors impacting the overall performance of the breaker failure scheme should be carefully examined prior to the design and implementation. The design should minimize the use of auxiliary components where possible, as these devices introduce additional failure points and time delays in the scheme. For example, one should use a dedicated set of breaker auxiliary contacts instead of using an auxiliary relay to multiply contacts that are already in use.

A breaker failure scheme may be initiated by receipt of a direct transfer trip (DTT) signal for various reasons. For example, when DTT is part of a the line protection or where DTT is used to quickly remove faults on line reactors, capacitors, or transformers that are on the line, the local breaker failure scheme may be initiated by a DTT signal from the remote terminal. When transfer tripping is used to activate breaker failure, proper isolation of the local transfer trip receivers should be incorporated to prevent inadvertent breaker tripping and breaker failure initiation (BFI) during routine maintenance of the DTT transmitters at the remote substation, or when the communication circuits used for DTT are being tested.

A breaker failure scheme should not be designed such that manually opening a breaker initiates the breaker failure scheme. Protective devices for the equipment connected to the breaker will initiate the breaker failure scheme should an insulation failure occur during a manual operation.

The breaker failure design should also consider the following where applicable:

— Any protective relay operation should activate the breaker failure scheme.
— Blocking reclosing of all tripped breakers.
— Effects of single pole tripping on breaker failure scheme operation.

8.1 Breaker failure current detectors

The purpose of a breaker failure current detector is to determine if the system has continued current flow after the breaker was called upon to operate. It is therefore important that breaker failure current detectors pick up for minimum fault current conditions. The current detectors are non-directional instantaneous relays (or elements) that monitor phase, ground, and residual current or any sequence component of these currents.

8.1.1 Phase current detectors

Phase current detectors are non-directional overcurrent devices (or elements in a multi-function relay) with instantaneous pickup and dropout time characteristics. They are typically set from minimum tap to 50% of minimum phase-to-phase fault current, depending on the scheme that is used. In most applications the level of load current is not an issue in setting the phase current detectors. If for some reason there is a desire to not have the phase current detector picked up during high load conditions the application of a negative sequence current detector in addition to the phase current detector could be considered. Negative sequence current detectors can be set below load current in cases where the minimum phase fault current is less than the maximum load current through the breaker.

8.1.2 Ground current detectors

A ground current detector is a non-directional overcurrent device (or element in a multi-function relay) with instantaneous pickup and dropout time characteristics. Ground current detectors are typically set at 30–40% of the minimum phase-ground fault current available, or below the current pickup setting of the ground time overcurrent protection relay.

8.2 Part of existing protection

Intelligent electronic devices (IEDs) including intelligent multi-function protective relays are the most common devices in today's new installations of substation protection and control systems. Intelligent

Copyright © 2006 IEEE. All rights reserved.

Copyright The Institute of Electrical and Electronics Engineers, Inc.
Provided by IHS under license with IEEE
No reproduction or networking permitted without license from IHS
Not for Resale

multi-function relays typically include a set of primary protection functions required for the protection of the primary system equipment as well as multiple additional protection or non-protection elements that expand their functionality. The drawback to employing the breaker failure function in a multi-function device is the loss of independence of the breaker failure scheme from the primary or backup protective relays. Therefore, when applying breaker failure protection as part of an existing primary or secondary relay, the issue of common-mode failure must be recognized and its effect on the application must be evaluated.

8.2.1 Part of feeder, transformer, motor, or transmission line protection devices

One of the most common additional built-in functions present in multi-function relays for the protection of feeders, transformers, motors, or transmission lines is breaker-failure protection. It can vary significantly in the level of complexity, ranging from a basic single timer to multiple timers and elements.

Following inception of a fault, one or more main protection functions or devices will operate and issue a trip signal to the fault interrupting device. If the fault condition has not been cleared following a set time delay after the trip initiation, the breaker failure protection will operate.

The breaker failure protection may incorporate one or two timers, allowing configuration for the following modes:

— Simple breaker failure protection (BFP), where only one timer is enabled. For any protection trip, Timer 1 is started and is normally reset when the circuit breaker opens to isolate the fault. If successful fault clearing is not detected, Timer 1 times out and closes an output contact assigned to breaker failure. This contact is used to initiate tripping (usually through a lockout relay) of all sources contributing current to the faulty breaker.

— A re-tripping scheme, plus delayed back-tripping. Here, Timer 1 is used to route a trip to a second trip circuit of the same circuit breaker. This requires duplicated circuit breaker trip coils, and is known as re-tripping. Should re-tripping fail to open the circuit breaker, a back-trip may be issued following an additional time delay. The back-trip uses Timer 2, which is also started at the instant of the initial protection element trip.

The BFP element can be configured to operate for trips triggered by protection elements within the relay or via an external protection trip. The latter is achieved by allocating one of the relay's optically-isolated inputs or virtual inputs to "External Trip."

8.2.2 Part of centralized bus protection devices

A centralized bus differential protection system has a number of three-phase current inputs that typically correspond to the number of elements connected to the protected bus. It will perform the data processing for all the inputs and calculate the differential current in order to detect a bus fault and issue trip signals to all breakers connected to the bus. At the same time, it will initiate the breaker failure element that has to monitor the tripping of all breakers to ensure that the fault has been cleared. If any breaker fails to clear the fault, the bus protection should issue a trip signal to all adjacent breakers and to the remote ends of the protected lines, as applicable.

The trip circuit of the bus differential protection can also be used to trip all breakers on the bus should a breaker failure occur when the breaker trip was initiated by the protection of any of the primary system elements connected to the bus. This may result in significant reduction in the wiring required to trip all adjacent breakers to the one that failed to clear the fault, at the risk of not having breaker failure protection if the bus differential protection is out of service. This needs to be evaluated for each application.

Copyright © 2006 IEEE. All rights reserved.
Copyright The Institute of Electrical and Electronics Engineers, Inc.
Provided by IHS under license with IEEE
No reproduction or networking permitted without license from IHS
Not for Resale

8.2.3 Part of distributed bus protection devices

A distributed bus protection system is built up from modules and configured to suit a fixed or changing bus configuration. The advantage of such a system is that it significantly reduces the wiring, since it consists of a central module and peripheral modules that are close to the ct locations. The interface between the central and peripheral units is typically over high-speed communication links over fiber.

The peripheral modules are the “input” modules for the circuits that are included in the bus configuration. They accept the inputs from the cts. In this case, the cts do not need to be connected for the same ratio. Any differential current that is caused by a fault on the bus is seen by the central unit and acted on accordingly. The bus differential system architecture is built around the central unit that collects and analyzes the information from the peripheral units associated with each bay or ct location. Circuit breaker failure initiation is accomplished locally at each circuit by its associated peripheral module. A trip signal is issued by the central unit and is then confirmed by the local peripheral unit. The peripheral unit will then trip its associated breaker and initiate the breaker failure function. If the peripheral unit detects a failure of the breaker to trip, it will trip its associated breaker and issue a general bus-zone trip signal via the central unit to trip all breakers connected to the bus. If the breaker failure function of a peripheral unit is initiated by an external protection device and it detects that the breaker has failed to trip, the peripheral unit will also issue a general bus-zone trip signal via the central unit to trip all breakers connected to the bus.

8.3 Breaker failure initiation

The operation of all relays that trip a breaker usually initiates breaker failure of that breaker. Typically, the one exception is breaker failure from an adjacent device. The rationale for this exception is that it is more likely to have a flaw in both breaker failure schemes than to have two breakers failed at the same time.

Breaker failure initiate (BFI) may originate directly from a protective relay or from a contact on an auxiliary relay, or lockout relay. If originating from a protective relay, the BFI typically resets on breaker operation and clearing of the fault. If originating from an auxiliary relay, the BFI may not reset once the fault is successfully isolated. This operating characteristic should be addressed in the scheme design.

The breaker failure element in a multi-function relay is initiated by any built-in protection function that issues a breaker trip signal. An option to initiate it from an external protection device through an optically isolated input, virtual input, or remote control might be available as well.

8.4 Breaker failure actions

Depending on the application and the specific practices of the company or user, a breaker failure operation can initiate the following actions:

— Trip each electrically adjacent breaker in the same substation regardless of voltage level. This should be accomplished through either a single dedicated breaker failure auxiliary relay or through two independent auxiliary relays, one or both of whose primary functions may be associated with another protection scheme (typically a differential scheme). Redundant auxiliary tripping relays allow a single relay scheme to be unavailable without affecting the operation of the breaker failure relaying.

— Key transfer trip, where applicable, to remote, electrically adjacent locations. The transfer trip signal should be extended long enough to assure remote breaker operation. Blocking of automatic reclosing should be maintained as long as the transfer trip is received at the remote location.

— Enable communications-assisted tripping in pilot relay systems to allow for remote tripping of power circuit breakers associated with the failed breaker. Examples are the stopping of carrier on a directional comparison blocking relay system, or the initiation of the permissive signal in a permissive

Copyright © 2006 IEEE. All rights reserved.

Copyright The Institute of Electrical and Electronics Engineers, Inc.
Provided by IHS under license with IEEE
No reproduction or networking permitted without license from IHS
Not for Resale

overreaching pilot relaying scheme. Although this action may reduce the fault clearing time, it may also allow the breaker at the remote terminal to reclose onto a failed breaker.

— Block reclosing of selected breakers depending upon existing local breaker reclosing schemes or substation configuration.

— Initiate an alarm indicating the breaker failure to trip.

— Trip the failed breaker. This action may be considered redundant, particularly if “re-trip” logic is used in the scheme.

— Lock out or block all closing of the breakers tripped. This action may be unacceptable if remote restoration is desirable.

9. Factors influencing settings

Typical breaker failure schemes include a phase and ground current detector element and an operate timer. In the typical breaker failure scheme, as shown in Figure 2, the 50BF element is composed of a phase current measurement in each of the three phases and a residual ground current measurement, all of which operate a common timer. In some schemes, as in Figure 5, the current measurements are only activated when the assigned breaker is requested to trip, and the breaker failure timer has timed out. The current will go to zero in the phase and ground current detectors when the breaker has successfully operated and cleared the fault.

For a breaker failure scheme to provide the desired response when the protected breaker fails to interrupt fault current, the current detectors need to be set sensitive enough to respond to any fault condition for which the protective relays initiate trips to that breaker. There are a few applications in which use of sensitive current detectors may not be adequate, such as for breakers that are associated with transformers or generators where the protective relays are designed to operate for fault conditions that draw little to no current through the breaker. In these cases, the current detector in the breaker failure scheme will be limited by the minimum sensitivity of the breaker failure relay, and the scheme may need to be supplemented with non-current sensing inputs, such as breaker position status.

In situations where the breaker has opening resistors, the current detector settings should allow for the condition where the resistors are inserted but the main contacts fail to interrupt the current.

For applications where the maximum load current is less than the minimum fault current and the contingency conditions that the breaker failure scheme is intended to function properly (detect and initiate) with some margin, it may be possible to not isolate the breaker failure output during protective equipment testing.

It may be tempting to set the breaker failure current detectors above load current. This approach may be possible for applications where the maximum load current is less than the minimum fault current under all conditions, including contingencies. This option may seem desirable to, for example, support protective equipment maintenance without the need to isolate the protective relay trip initiates to the breaker failure relay. For example, testing line protective relay without isolation of the output contacts initiating breaker failure in conventional applications (breaker failure not integrated as part of the protective relay).

However, this practice may be problematic for the following reasons:

— Some breaker failure schemes only require a protective relay trip initiate, not current, to start the breaker failure timer. Upon timeout, the breaker failure relay may remain armed, waiting indefinitely for the current detector to pick up, such as for a remote fault. Breaker failure scheme logic should be checked thoroughly before implementing breaker failure relay settings.

— Power system changes over time may change the relative load and minimum fault current levels. This approach requires examination of the power system condition as well as the applications each time protective equipment associated with the breaker is tested.

--`,,```,,,,````-`-`,,`,,`,`,,`---
Copyright © 2006 IEEE. All rights reserved.
Copyright The Institute of Electrical and Electronics Engineers, Inc.
Provided by IHS under license with IEEE
No reproduction or networking permitted without license from IHS
Not for Resale

— In multi-breaker applications, such as double-bus, double-breaker, or breaker-and-a-half schemes, care must be taken to validate the current detector set points for each of the breakers if the plan is to retain the breaker in service while protective equipment are tested.

— The extent and type of protective equipment being tested may affect the fault detector pickup. For example, the current detector element of the breaker failure relay may be inadvertently energized if testing involves current injection when the breaker failure current elements are in the same ct circuit as the protective relay that is being tested.

— Maintenance personnel's distinct knowledge of breaker failure set points for each terminal within a given station since not all the breaker failure fault detectors, for different breakers within a substation, may be set above load current.

Alternatively, it is good practice to disable the protective relay breaker failure initiate outputs during testing. This permits more flexibility in setting breaker failure current detectors to coordinate with the protective relay scheme.

For three-phase tripping applications, a ground current detector in the breaker failure scheme can typically be set more sensitive than the phase elements. This will provide additional sensitivity for faults that involve ground. The current magnitude for these faults will be limited by the amount of fault resistance, which will vary depending on the nature of the fault but if the breaker failure ground current detector is set the same as the most sensitive ground fault detecting relay that trips the breaker, the protection packages are coordinated.

Current detector dropout may be delayed by dc current decay present in the ct circuit (known as subsidence current), which often occurs following breaker primary current interruption and ct saturation. Current detectors that operate on the magnitude of both ac and dc current are particularly prone to delayed dropout due to remnant dc decaying current. Current detectors that operate on change of current over time principle (dI/dt) can also have a delayed dropout if the current detectors are set so sensitive that the dI/dt in the decaying dc is detected. Because the current threshold for this phenomenon is difficult, if not impossible to determine, sufficient margin must be included in the breaker failure timer setting to account for the added reset delay due to subsidence current. The breaker failure relay manufacturer should be consulted to determine the current detector reset characteristics in the presence of subsidence current. Breaker failure relays that examine current after the breaker failure timer expires are not necessarily immune to the affects of subsidence current. Digital filters used in microprocessor-based relays retain sample data for at least one filter period, so the filter output, which also includes the affect of subsidence current, may still be sufficient to pick up the current detector, even though the primary current has been interrupted.

If either the phase or ground breaker failure current detector cannot be set sensitive enough to ensure tripping for all faults that initiate tripping of a breaker, then a scheme like that shown in Figure 10 or Figure 11 may be required. A typical application, where supplementing the 50BF breaker failure current detector with the 52a breaker auxiliary contact is for a transformer or generator application where a volts per Hertz function or differential operation may operate on a fault that produces very little current. The scheme with the 52a breaker auxiliary contact should be used only when required as these contacts are considered to have low reliability relative to the rest of the breaker failure scheme and therefore lowers the overall reliability of the breaker failure scheme.

An alternative to using either the current detector, or breaker auxiliary contact to sense whether the breaker has operated successfully, is to use a scheme that "ORs" the current detector with the breaker auxiliary contact. In this scheme, if either is present, the breaker failure scheme is armed.

Referring to Figure 3, by setting the breaker failure timer greater than the breaker interrupt time (less BFI pickup as necessary) and the drop out of the 50BF current detector after the fault is cleared, the breaker failure scheme will not operate for a successful breaker operation. Adequate margin is taken into account to allow for maximum operate times. It is desirable to set the breaker failure timer so that the total fault

Copyright © 2006 IEEE. All rights reserved.

Copyright The Institute of Electrical and Electronics Engineers, Inc.
Provided by IHS under license with IEEE
No reproduction or networking permitted without license from IHS
Not for Resale

clearing time is less than: transient stability time, the time to damage major equipment such as conductors and transformers, and the time that major customers' processes may be affected. Stability constraints typically require breaker failure timer settings in the ten to thirty cycle range, but in rare cases may require settings as low as four cycles. Equipment damage typically occurs for clearing times greater than thirty cycles. Clearing times that impact major customer processes may be longer than thirty cycles. If the required clearing times are less than thirty cycles, it is highly unlikely that faster breaker failure clearing will prevent the process shutdown.

As can be seen from Figure 3, the breaker failure scheme starts timing when a protective device requests the breaker to trip. Therefore, there should not be a need to provide additional delay within the breaker failure timer for external zones that may operate more slowly than breaker failure. If a local backup relay trips the same backup breakers that a breaker failure scheme would operate with a time delay shorter than the breaker failure timer, then the breaker failure scheme must provide a lockout to prevent reclosure.

Coordination of remote backup protective relays may also be taken into consideration so that the breaker failure protection operates first with margin. Some relevant factors in determining an appropriate margin for the coordination of backup protection include:

— Impact on clearing time of backup protection for faults in its own protected zone.
— Impact of tripping by the backup protection for a breaker failure situation. In some cases, the zone protected by the backup protection may have to be cleared anyway for a breaker failure, and there would be little benefit in slowing down the backup protection to coordinate with the breaker failure protection.

9.1 Total clearing time requirements

The total clearing time of the breaker failure protection scheme is the sum of the following quantities (as applicable):

— Relay operate time
— Relay output time
— Breaker failure relay input recognition time
— Breaker failure relay 50BF operate time
— Breaker failure timer
— Breaker failure output operate time
— Auxiliary and lockout relay operate times
— Communication delay time
— Backup breaker operate time
— Adequate margin

This time must be compared to the transient stability requirements of the system as well as equipment damage and customer voltage sag requirements.

The critical switching time for stability is one measure to determine how fast a breaker failure scheme must operate. The critical switching time for transient stability is dependent on many factors. Among these factors are severity of the fault, loading on the system, mass of the generators, and the type of fault. In general, the more severe the fault the faster the fault must be removed from the system. Also, because the critical switching time is dependent upon displacement of positive sequence power, a three-phase fault must be removed faster than a line-to-line-to-ground fault, which must be cleared faster than a line-to-line fault, which in turn must be cleared faster than a line-to-ground fault. Thus, a three-phase fault might need to be cleared in breaker failure time much faster then a single line-to-ground fault. If the breaker failure time, due to stability requirements, is to be cleared faster than eight cycles, then it may be desirable to set the breaker failure timer

Copyright © 2006 IEEE. All rights reserved.
Copyright The Institute of Electrical and Electronics Engineers, Inc.
Provided by IHS under license with IEEE
No reproduction or networking permitted without license from IHS
Not for Resale

faster for three-phase faults than single line-to -ground faults. A scheme like that is shown in Figure 8. The very tight margin of the multiphase faults is exercised in the rare case of a multiphase fault, while the more common single line to ground faults are given additional time to allow maximum timing margin to prevent extraneous breaker operations.

9.2 Control timer setting for scheme described in 7.3

The control timer setting for the scheme described in 7.3 and shown in Figure 7 must be carefully considered on circuits that have high-speed sync-check reclosing. This is due to the possibility of producing a BF output should a line relay trip contact fail closed.

For example, consider a line terminal with a BF relay having the scheme of Figure 7. The breaker failure timer is set at seven cycles and the control timer is set at 36 cycles. The phase current detectors are necessarily set below load so that the BF relay senses all fault conditions seen by primary relays (minimum fault current below maximum load). The same terminal has a sync-check relay set to close in 15 cycles following a breaker trip, if the bus and line voltages are in-phase.

Now, consider the situation that would occur if a line relay on this terminal failed with its trip contacts closed. This stuck contact would provide a BFI input to the breaker failure relay, which starts both the breaker failure and control timers. After three cycles, the breaker trips successfully, but the BFI signal continues due to the failed line relay contact. Fifteen cycles later, the breaker recloses via the high-speed sync-check, restoring line load through the breaker. By this time the BF timer has expired and there is current in the breaker, but the control timer has not yet expired. Thus an erroneous breaker failure output is produced, tripping the backup breakers on the bus section and disrupting the transmission system.

A proper control timer setting would coordinate with the sync-check reclosing time delay, and thus limit the window of opportunity for a breaker failure output. In the specific case above, a control timer setting of 13.5 cycles would have prevented the erroneous breaker failure output while still providing enough margin to produce a needed breaker failure output for an actual breaker failure condition. A proper setting of the control timer would result in the line breaker tripping to lockout instead of locking out the entire bus from an erroneous BF output.

It is necessary to be thoroughly familiar with the method used by a particular breaker failure relay manufacturer, along with knowledge of the scheme in which the relay is placed, when setting this control timer.

9.3 Setting considerations for scheme described in 7.4

The current detector settings for this application are fundamentally the same as those discussed in Clause 9 and 9.1. This scheme allows the user to set the timers independently based on the critical clearing time for different types of faults. The timer (62-1) associated with three-phase faults, phase-to-phase faults, and phase-to-phase-to-ground faults would normally be set fast enough to ensure breaker failure tripping occurs within the critical clearing time for these fault types. Since single line-to-ground faults generally have a longer critical clearing time, the timer (62-2) associated with these faults could have a longer delay.

10. Communications based breaker failure protection

10.1 Communications in conventional breaker failure protection

Communications are used for breaker failure protection to send a direct transfer trip (DTT) signal to a remote line breaker(s) in the event the local breaker fails to trip. This practice enables high-speed remote

Copyright © 2006 IEEE. All rights reserved.

Copyright The Institute of Electrical and Electronics Engineers, Inc.
Provided by IHS under license with IEEE
No reproduction or networking permitted without license from IHS
Not for Resale

clearing for faults that would otherwise be cleared with some intentional time delay. DTT also avoids fault situations that may not be detected by remote protection because fault contributions are minimal.

Teleprotection is the term used to describe communication-assisted protection. The teleprotection channel could operate over leased telephone lines, power line carrier, microwave, or fiber optic paths.

The teleprotection channel must be dependable during fault conditions to ensure that the DTT signal is received correctly, with minimal time delay. Equally important, the teleprotection channel should not cause incorrect spurious DTT.

Direct transfer trip systems, as the name implies, are generally designed to trip a remote breaker without any added supervision. Because of this practice, communication channel security is of great importance. Many systems in use today utilize two separate, or dual channel, DTT signals to enhance security. Both signals must be received at the other end of the line before the remote breaker is allowed to open. Classically, a frequency shift key (FSK) system is used. In FSK systems, the communication channels are always active and can be monitored to ensure operational availability. Modern digital communications systems offer additional techniques, such as path switching, and message error detection, to ensure reliable direct transfer trip functionality. Most dual channel systems are designed to "fail over" to single channel trip operation in the event that one of the channels has failed. Although security is compromised for this situation, the DTT system is still in service. Channel failure is generally monitored so that rapid repair can be accomplished in the event of a failure.

It is also possible to enhance security at the remote end by supervising the DTT signal with an overcurrent fault detector. Care must be taken to ensure that there is adequate current for all cases for which the transfer trip signal may be received.

10.2 High-speed peer-to-peer communications on substation LAN

The development of IEC 61850 [B4] is targeted at reducing the costs and improving the efficiency of integrated substation protection and control systems by replacing the hard wiring between the IEDs with high-speed peer-to-peer communications.

Messages based upon the asynchronous reporting of an IED's digital outputs' status are sent to other peer devices enrolled to receive these status messages during the configuration stages of the substation integration process. Since this communication is used to replace the hard wired control signal exchange between IEDs for interlocking and protection purposes, it is mission sensitive, time critical, and must be highly reliable.

The associated IEDs receiving the message use the contained information to determine what the appropriate protection response is for the given state. The decision of the appropriate action to messages and the action to take should a message time out due to a communication failure is determined by local intelligence in the IED receiving the message. It can be used for breaker failure protection to initiate a distributed breaker failure protection function or to trip the adjacent breakers.

To achieve a high level of reliability, messages will be repeated as long as the state persists. To maximize dependability and security, a message will persist at the receiver IED for the "hold time." After the hold time expires, the message (status) will expire unless the same status message is repeated or a new message is received prior to the expiration of the hold time.

The repeat time for the initial message will be short and subsequent messages have an increase in repeat and hold times until a maximum is reached. The message contains information that will allow the receiving IED to know that a message has been missed, a status has changed, and the time since the last status change.

Copyright © 2006 IEEE. All rights reserved.
Copyright The Institute of Electrical and Electronics Engineers, Inc.
Provided by IHS under license with IEEE
No reproduction or networking permitted without license from IHS
Not for Resale

In order to achieve high-speed performance and at the same time reduce the network traffic during severe fault conditions, the message has been designed based on the idea of having a single message that conveys all required protection scheme information regarding an individual protection IED. It represents a state machine that reports the status of the devices in the IED to its peers. To allow further customization of the messages, individual applications can map other status points to the User Defined bit pairs User_Status.

Distributed communications-based breaker failure protection can be designed in two different ways:

a) As a function in an IED that initiates the breaker failure protection when it sees the trip signal from the relay protecting the faulted power system device

b) As a built-in function in the protection IED that detected the fault and issued the trip signal

10.2.1 Application to initiate breaker failure protection

Figure 16 shows an example of a breaker failure protection scheme based on an external device.

The performance of the different elements of the distributed breaker failure protection scheme is as follows:

The relay will detect a fault condition on the protected line and will issue a trip signal in order to clear the fault. This can be a message with the trip bit pair indicating the operation of the trip output function of the IED. The service used for this operation is called a “GOOSE” (Generic Object Oriented Substation Event). The bay controller that implements the distributed breaker failure (BF) function will subscribe to this message, and as soon as it is received will start the breaker failure timer. If the breaker fails to trip, the BF function will indicate a breaker failure and will send a message to the substation local area network (LAN) to trip adjacent breakers in order to clear the fault.

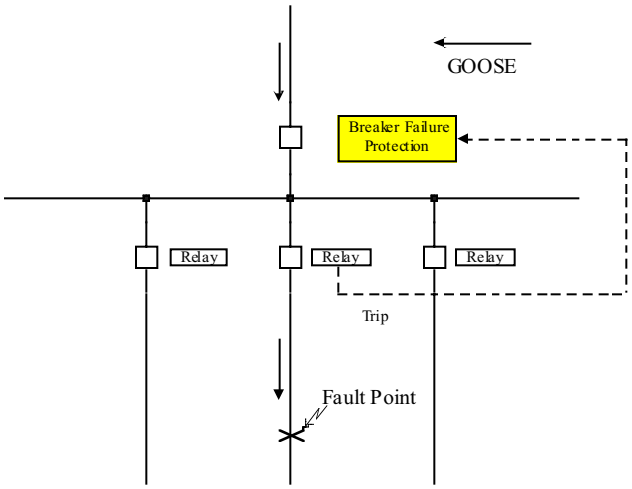

Figure 16—Distributed breaker failure protection

In some cases the BF function in the bay controller can also send a trip message to the network that will attempt to re-trip the faulted feeder breaker through a different physical connection or another breaker IED connected to the substation LAN.

Copyright © 2006 IEEE. All rights reserved.

Copyright The Institute of Electrical and Electronics Engineers, Inc.
Provided by IHS under license with IEEE
No reproduction or networking permitted without license from IHS
Not for Resale

10.2.2 Applications to trip breakers from breaker failure protection

When the breaker failure protection function is built into the relay that detects the fault condition, it will detect the breaker failure to clear the fault based on one of the criteria described in Clause 8 of this guide. It will then issue a message with a bit pair set to indicate the breaker failure condition. All IEDs that are associated with breakers adjacent to the failed breaker will have to be set to subscribe to such a message, and issue the signal to trip their associated breakers.

11. Breaker failure relay testing

Considering the necessary control actions performed by breaker failure outputs, users must be very careful when testing these schemes. Results of erroneous breaker failure (BF) tripping include dropping local loads, interrupting multiple transmission paths, tripping remote breakers with the possibility of dropping tap loads, and tripping or causing instability in generators. However, due to the importance of these schemes and the possible catastrophic consequences should the scheme fail to operate, initial and periodic testing is recommended.

Following are general guidelines to be considered when testing BF schemes. Note that these guidelines apply to conventional BF schemes, in which the BF relay is in a physically separate device from the existing protective relays. Schemes that use BF logic as part of existing protective relays could also follow these guidelines as part of an overall relay calibration/functional test procedure. BF protection implemented over substation LAN requires additional scrutiny, and the best policy would be to consult with the manufacturer to determine appropriate testing methods.

- As stated in Clause 8, isolation switches to allow maintenance and testing of the scheme are required. This is especially true if the breaker failure functions are part of existing primary protection. Separate BF outputs should be wired through isolation switches to facilitate isolation for testing.
- Although auxiliary tripping relays have their disadvantages (additional failure point, additional time delay), it is more difficult to test the BF scheme without them and could necessitate a complete station outage in order to perform adequate tests.
- While it is possible to test a BF relay with its corresponding breaker in service, it is generally advisable to isolate the breaker to reduce the possibility of an erroneous trip output (i.e., test the BF relay when the breaker is out for scheduled maintenance). Testing the BF relay with the breaker in service can be especially risky if the phase current detectors are set below expected load.
- A thorough review of drawings is necessary to determine all possible BF initiation (BFI) sources and trip paths. For example, some schemes trip the bus differential auxiliary relay.
- BF trip outputs should be isolated whenever test current is passed through the BF relay current coils and/or whenever the relays that provide a BFI signal are being trip tested.
- A full set of commissioning bench-tests is recommended prior to placing a new BF relay in service. These tests should including the following:
  - Perform initial testing as per the manufacturer's recommended initial test procedure as found in instruction manuals and/or application guides. This should include testing phase and ground current detectors, breaker failure (and any other) timers, and inputs (breaker failure initiate, low SF_6 gas pressure indication, pallet interlocks, etc.).
  - Apply relay settings according to the specified settings provided by the protection engineer, and test current detectors and timers according to the desired settings.
  - On electromechanical models, mechanical inspection—for broken/damaged components, tight connections, contact gaps/wipe as applicable.
- With the relay installed in the current/tripping circuits, the following tests should be performed (with trip outputs isolated or limited):

Copyright © 2006 IEEE. All rights reserved.
Copyright The Institute of Electrical and Electronics Engineers, Inc.
Provided by IHS under license with IEEE
No reproduction or networking permitted without license from IHS
Not for Resale

— Passing test current from the breaker CT to the relay and reading it in the relay (with external ammeter and/or with relay display)

— Test trip paths designed to provide a BFI input

— Test loss-of-dielectric conditions by simulating low SF_6 or air pressure (if applicable)

— Test the BF scheme as a system, simulating a fault condition with primary relays in series with BF relay; block tripping by primary relays and allow the BF relay to provide re-trip for the breaker as applicable, then allow the BF relay to trip the auxiliary relay

— On commissioning, allow the BF trip auxiliary relay to trip the breakers, send transfer-trip, etc., as designed

— Test the 52a contact input to the BF scheme by operating the protected breaker and monitoring the auxiliary contact's status

— Contact with the manufacturer should be maintained to keep abreast of bulletins issued covering possible component or firmware changes necessary

11.1 End-to-end testing

In Extra High Voltage (EHV) protection, a circuit breaker can be tripped by a number of different protection schemes located on different panels within the substation. For example, a circuit breaker connected to a bus and a line could be tripped by the following types of protection:

— Primary Bus Protection

— Secondary Bus Protection

— Primary 1 Line Protection

— Primary 2 Line Protection

— Backup Electromechanical Line Protection

When commissioning the substation, the use of modern test sets that include synchronized testing capability via Global Positioning Satellites (GPS) can be used within the substation to scheme test the breaker failure relay (BFR) with the initiating protection scheme. An internal fault with a breaker failure condition can be simulated using two three-phase synchronized test sets—one located at the protective relay panel and the other at the BFR panel. For an internal line fault simulation with a breaker failure condition, the system test would confirm the following:

a) Operation of the protective relay breaker failure initiating contact (BFI or 62-X) and the confirmation of the correct wiring to the BFR.

b) Operation of the BFR re-trip element if used.

c) Operation and time delay of the BFR timer.

d) Blocking of circuit breaker reclosing.

e) Operation of the BFR lockout relay.

f) Operation of Local and SCADA alarms.

g) Pallet Interlocks

The scheme test can be repeated for an internal fault with increasing circuit breaker clearing times to measure the total margin in the BFR timer setting. With this type of test, all the elements affecting the performance of the BFR are tested simultaneously.

Copyright © 2006 IEEE. All rights reserved.

Copyright The Institute of Electrical and Electronics Engineers, Inc.
Provided by IHS under license with IEEE
No reproduction or networking permitted without license from IHS
Not for Resale

Annex A

(informative)

Bibliography

[B1] An Appraisal of Remote and Local Backup Relaying, Kennedy, L. F., McConnell, A. J., *AIEE Transactions,* Vol. 76, pp 735–741, October 1957.

[B2] Darlington, A. N., Patrick, T. W., “Experience with Local Breaker Failure Protection,” Georgia Tech Protective Relay Conference, May, 1973.

[B3] Elmore, W., Li, H., Westinghouse Electric Corp., “Breaker Failure Relaying,” *Silent Sentinels,* RPL 80-1, June 1980.

[B4] IEC 61850, Communication networks and systems in substations.

[B5] IEEE 100, *The Authoritative Dictionary of IEEE Standards Terms,* Seventh Edition.

[B6] IEEE Committee Report, “Local Backup Relaying Protection”, 69TP 602-PWR, *IEEE Transactions on Power Apparatus and Systems,* Vol. PAS-89, No. 6, July/August 1970.

[B7] IEEE PSRC Report, “Summary Update of Practices on Breaker Failure Protection”, *IEEE Transaction Power Apparatus and Systems*, Vol. PAS-101, No. 3, pp 555-563, March 1982.

[B8] Li, H., *Protective Relaying Theory and Applications,* Backup Protection, New York: Marcel Dekker Inc., 1994, pp.303-316.

[B9] Thompson, M. J., “Fundamentals and Advancements in Breaker Failure Protection”, 53rd Annual Georgia Tech Protective Relay Conference, Atlanta,GA, May 5-7, 1999.

Copyright © 2006 IEEE. All rights reserved.

Copyright The Institute of Electrical and Electronics Engineers, Inc.
Provided by IHS under license with IEEE
No reproduction or networking permitted without license from IHS Not for Resale

Annex B

(informative)

Breaker failure setting example

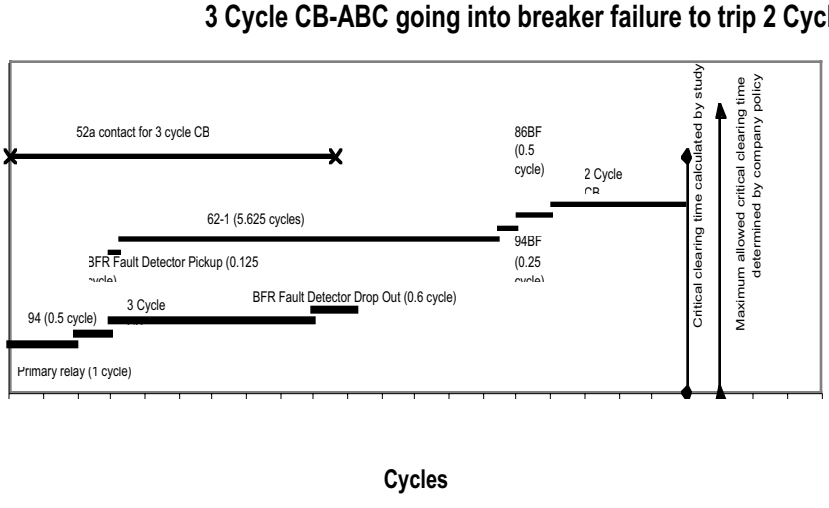

Figure B.1—Setting example timing chart

Figure B.1 shows a typical breaker failure timing chart. A breaker that normally clears a fault within three cycles fails to open. A two-cycle breaker is the backup. In this case, studies have determined that the critical clearing time to maintain transient stability is ten cycles. There are several times that cannot be changed or set. Studies have determined the maximum times for the following list of times:

- Primary Relay Operate time 1 cycle
- Trip relay pick up 0.5 cycle
- Primary Circuit Breaker 3.0 cycles
- BFR Current Detector drop out 0.6 cycles
- 86 BF Lockout relay pick up 0.5 cycle
- 94 BF pick up 0.25 cycle
- Backup Breaker Operate Time 2 cycles

The only variable is the 62-1 breaker failure timer setting. The setting for the breaker failure timer can be determined by adding up all the operate times and subtracting this sum from the critical clearing time. In this case, Primary relay + Aux relay + Current detector pickup + Lockout relay + breaker failure relay output relay + backup breaker clearing time = 1 + 0.5 + 0.5 + 0.25 + 2 = 4.25 cycles. For a critical clearing time of ten cycles, the maximum 62-1, breaker failure timer setting is 10 – 4.25 = 5.75 cycles. If the critical clearing time given does not have any margin built into it, some margin must be subtracted from the breaker failure timer setting calculated.

In this example, the critical clearing time to maintain transient stability is used to determine the breaker failure timer setting. However, this is not the only means of determining this timer setting. More frequently, the

Copyright © 2006 IEEE. All rights reserved.

Copyright The Institute of Electrical and Electronics Engineers, Inc.
Provided by IHS under license with IEEE
No reproduction or networking permitted without license from IHS
Not for Resale

timer will be set only as long as necessary to ensure security of the breaker failure protection against misoperation. The security margin will take into account all variables and uncertainties in the operation of the breaker trip mechanisms, reset of current detectors, operating time of auxiliary relays, and will often include a margin that experience has shown to be secure. This security margin will then determine the setting of the breaker failure timer independently of the critical clearing time for transient stability purposes. Having noted the above comments, it is also noted that the transient stability studies to determine critical clearing times may assume only a single phase of an EHV breaker (with independent pole control operating mechanisms) has failed to open in its interrupting time. Therefore, the critical clearing time may be based on the assumption of an initial three-phase fault, cleared in normal time on two phases, and with a breaker failure to clear the fault on the third phase

Copyright © 2006 IEEE. All rights reserved.
Copyright The Institute of Electrical and Electronics Engineers, Inc.
Provided by IHS under license with IEEE
No reproduction or networking permitted without license from IHS
Not for Resale