IEEE Standard for Preferred Power Supply (PPS) for Nuclear Power Generating Stations (NPGS)

IEEE Power Engineering Society

Sponsored by the
Nuclear Power Engineering Committee

765™

IEEE
3 Park Avenue
New York, NY 10016-5997, USA

18 October 2006

IEEE Std 765™-2006
(Revision of
IEEE Std 765-2002)

Copyright The Institute of Electrical and Electronics Engineers, Inc.
Provided by IHS under license with IEEE
No reproduction or networking permitted without license from IHS

Not for Resale

IEEE Std 765™-2006
(Revision of IEEE Std 765-2002)

IEEE Standard for Preferred Power Supply (PPS) for Nuclear Power Generating Stations (NPGS)

Sponsor

Nuclear Power Engineering Committee
of the
IEEE Power Engineering Society

Approved 8 June 2006
IEEE-SA Standards Board

Copyright The Institute of Electrical and Electronics Engineers, Inc.
Provided by IHS under license with IEEE
No reproduction or networking permitted without license from IHS
Not for Resale

Abstract: The design criteria of the preferred power supply (PPS) and its interfaces with the Class 1E power system, switchyard, transmission system, and alternate ac (AAC) source are described. This standard provides PPS requirements for nuclear power plants and guidance in the areas of AAC power source interfaces with PPS, physical independence of the PPS power and control circuits, and expanded PPS criteria for multi-unit stations.
Keywords: AAC, alternate ac source, Class 1E, NPGS, nuclear power generating station, PPS, preferred power supply, switchyard, transmission system

The Institute of Electrical and Electronics Engineers, Inc.
3 Park Avenue, New York, NY 10016-5997, USA

Copyright © 2006 by the Institute of Electrical and Electronics Engineers, Inc.
All rights reserved. Published 18 October 2006. Printed in the United States of America.

IEEE is a registered trademark in the U.S. Patent & Trademark Office, owned by the Institute of Electrical and Electronics Engineers, Incorporated.

Print: ISBN 0-7381-4988-8 SH95548
PDF: ISBN 0-7381-4989-6 SS95548

No part of this publication may be reproduced in any form, in an electronic retrieval system or otherwise, without the prior written permission of the publisher.

Copyright The Institute of Electrical and Electronics Engineers, Inc.
Provided by IHS under license with IEEE
No reproduction or networking permitted without license from IHS
Not for Resale

IEEE Standards documents are developed within the IEEE Societies and the Standards Coordinating Committees of the IEEE Standards Association (IEEE-SA) Standards Board. The IEEE develops its standards through a consensus development process, approved by the American National Standards Institute, which brings together volunteers representing varied viewpoints and interests to achieve the final product. Volunteers are not necessarily members of the Institute and serve without compensation. While the IEEE administers the process and establishes rules to promote fairness in the consensus development process, the IEEE does not independently evaluate, test, or verify the accuracy of any of the information contained in its standards.

Use of an IEEE Standard is wholly voluntary. The IEEE disclaims liability for any personal injury, property or other damage, of any nature whatsoever, whether special, indirect, consequential, or compensatory, directly or indirectly resulting from the publication, use of, or reliance upon this, or any other IEEE Standard document.

The IEEE does not warrant or represent the accuracy or content of the material contained herein, and expressly disclaims any express or implied warranty, including any implied warranty of merchantability or fitness for a specific purpose, or that the use of the material contained herein is free from patent infringement. IEEE Standards documents are supplied "**AS IS**."

The existence of an IEEE Standard does not imply that there are no other ways to produce, test, measure, purchase, market, or provide other goods and services related to the scope of the IEEE Standard. Furthermore, the viewpoint expressed at the time a standard is approved and issued is subject to change brought about through developments in the state of the art and comments received from users of the standard. Every IEEE Standard is subjected to review at least every five years for revision or reaffirmation. When a document is more than five years old and has not been reaffirmed, it is reasonable to conclude that its contents, although still of some value, do not wholly reflect the present state of the art. Users are cautioned to check to determine that they have the latest edition of any IEEE Standard.

In publishing and making this document available, the IEEE is not suggesting or rendering professional or other services for, or on behalf of, any person or entity. Nor is the IEEE undertaking to perform any duty owed by any other person or entity to another. Any person utilizing this, and any other IEEE Standards document, should rely upon the advice of a competent professional in determining the exercise of reasonable care in any given circumstances.

Interpretations: Occasionally questions may arise regarding the meaning of portions of standards as they relate to specific applications. When the need for interpretations is brought to the attention of IEEE, the Institute will initiate action to prepare appropriate responses. Since IEEE Standards represent a consensus of concerned interests, it is important to ensure that any interpretation has also received the concurrence of a balance of interests. For this reason, IEEE and the members of its societies and Standards Coordinating Committees are not able to provide an instant response to interpretation requests except in those cases where the matter has previously received formal consideration. At lectures, symposia, seminars, or educational courses, an individual presenting information on IEEE standards shall make it clear that his or her views should be considered the personal views of that individual rather than the formal position, explanation, or interpretation of the IEEE.

Comments for revision of IEEE Standards are welcome from any interested party, regardless of membership affiliation with IEEE. Suggestions for changes in documents should be in the form of a proposed change of text, together with appropriate supporting comments. Comments on standards and requests for interpretations should be addressed to:

Secretary, IEEE-SA Standards Board
445 Hoes Lane
Piscataway, NJ 08854
USA

Authorization to photocopy portions of any individual standard for internal or personal use is granted by the Institute of Electrical and Electronics Engineers, Inc., provided that the appropriate fee is paid to Copyright Clearance Center. To arrange for payment of licensing fee, please contact Copyright Clearance Center, Customer Service, 222 Rosewood Drive, Danvers, MA 01923 USA; +1 978 750 8400. Permission to photocopy portions of any individual standard for educational classroom use can also be obtained through the Copyright Clearance Center.

--`,,```,,,,````-`-`,,`,,`,`,,`---

Copyright The Institute of Electrical and Electronics Engineers, Inc.
Provided by IHS under license with IEEE
No reproduction or networking permitted without license from IHS

Not for Resale

Introduction

This introduction is not part of IEEE Std 765, IEEE Standard for Preferred Power Supply (PPS) for Nuclear Power Generating Stations (NPGS).

This standard was originally prepared to provide detailed design criteria for the preferred power supply (PPS) to ensure a design commensurate with its intended function and to provide sufficient detail to interpret, clarify, and expand on guidance given in Title 10, U.S. Code of Federal Regulations, Part 50 (10CFR50 [B1][a]), Appendix A, General Design Criteria 17 and General Design criteria 18, and IEEE Std 308™-1991.

Title 10, U.S. Code of Federal Regulations, Part 50 (10CFR50), Appendix A, General Design Criteria 17 (GDC-17) for nuclear power generating stations requires that an offsite electric power system be provided to permit functioning of structures, systems, and components important to safety. In addition, General Design Criteria 18 (GDC-18) provides requirements for inspection and testing of electric power systems.

In 1988, Title 10, Part 50.63 was added to the U.S. Code of Federal Regulations. Part 50.63 requires each light water-cooled nuclear power generating station to withstand a station blackout for a specific duration and to recover from it. In addition, Part 50.63 defines the requirements for coping with a station blackout by utilizing an alternate ac (AAC) power source.

The Nuclear Utility Management and Resource Council (NUMARC)[b] provided additional guidance in NUMARC 87-00-1988, Guidelines and Technical Bases for NUMARC Initiatives Addressing Station Blackout at Light Water Reactors. Since NUMARC 87-00 (Revision 1 August 1991) is not available for general public distribution, the guidelines contained therein were considered by the Working Group. The design requirements of AAC are outside the scope of this standard.

The previous revision of the standard added Annex A, which provides guidelines that may be used to preserve the reliability of the Preferred Power Supply in a deregulated environment.

This revision of the standard added Annex B, which provides guidelines for transmission system studies to ensure voltage adequacy of the PPS.

Notice to users

Errata

Errata, if any, for this and all other standards can be accessed at the following URL: http://standards.ieee.org/reading/ieee/updates/errata/index.html. Users are encouraged to check this URL for errata periodically.

Interpretations

Current interpretations can be accessed at the following URL: http://standards.ieee.org/reading/ieee/interp/index.html.

[a]The numbers in brackets correspond to those of the bibliography in Annex C.

[b]The Nuclear Energy Institute (NEI), established in March 1994, incorporates NUMARC.

Copyright © 2006 IEEE. All rights reserved.

Copyright The Institute of Electrical and Electronics Engineers, Inc.
Provided by IHS under license with IEEE
No reproduction or networking permitted without license from IHS
Not for Resale

Patents

Attention is called to the possibility that implementation of this standard may require use of subject matter covered by patent rights. By publication of this standard, no position is taken with respect to the existence or validity of any patent rights in connection therewith. The IEEE shall not be responsible for identifying patents or patent applications for which a license may be required to implement an IEEE standard or for conducting inquiries into the legal validity or scope of those patents that are brought to its attention.

Participants

This standard was prepared by Working Group 4.6 of Subcommittee 4, Auxiliary Power, of the Nuclear Power Engineering Committee. The working group had the following membership at the time this standard was approved:

George Attarian, *Chair*

Robert Carruth
Kenneth Fleischer
David Gladey
Kuljit Hara
Harvey Leake
John Mallanda
Gerald Nicely
David Sehi
Tom Sims
Brandon Swartley
Michael Tucker
Jennifer Weber

The Subcommittee on Auxiliary Power (SC4) of Nuclear Power Engineering Committee that recommended approval of this standard had the following membership:

Gerald Nicely, *Chair*

Harvey Leake, *Vice Chair*

George Attarian, *Secretary*

Vincent Andreozzi
John Bonner
Keith Bush
R.C. Carruth
John Carter
Kenneth R. Fleischer
Robert Fletcher
Amritpal Gill
David Gladey
Dale Goodney
Kuljit Hara
Evan Heacock
Paul Johnson
Bruce Lord
John MacDonald
John Mallanda
William Mindick
D. Roger Parker
David Sehi
Tom Sims
Robert Stark
Brandon Swartley
James Thompson
Michael Tucker
Jennifer Weber

At the time this standard was approved, the Nuclear Power Engineering Committee (NPEC) had the following membership:

John Disosway, *Chair*

John MacDonald, *Secretary*

Satish K. Aggarwal
Ijaz Ahmad
George Attarian
George Ballassi
Farouk D. Baxter
Brij M. Bharteey
Wesley W. Bowers
Daniel F. Brosnan
Nissen M. Burstein
Robert C. Carruth
John P. Carter
Stephen Fleger
Robert J. Fletcher
Robert Fuld
James Gleason
Dale T. Goodney
Britton P. Grim
William L. Hadovski
David A. Horvath
Paul R. Johnson
Harvey C. Leake
J. Scott Malcolm
Alexander Marion
Michael H. Miller
Gerald L. Nicely
Roger D. Parker
James Parello
Glen E. Schinzel
Neil P. Smith
James E. Stoner
James E. Thomas
John Waclo
John White
Paul L. Yanosy
David J. Zaprazny

Copyright © 2006 IEEE. All rights reserved.

Copyright The Institute of Electrical and Electronics Engineers, Inc.
Provided by IHS under license with IEEE
No reproduction or networking permitted without license from IHS
Not for Resale

The following members of the individual balloting committee voted on this standard. Balloters may have voted for approval, disapproval, or abstention.

William Ackerman
Satish Aggarwal
George Attarian
Farouk Baxter
John Bonner
Wesley Bowers
Mark Bowman
Daniel Brosnan
Mary Capelli-Schellpfeffer
Robert Carruth
John Carter
Guru Dutt Dhingra
John Disosway
Gary Engmann
Ajit Gwal
David Gladey
Dale Goodney
Randall Groves
Dennis Horwitz
Joseph Jancauskas
Paul Johnson
Yuri Khersonsky
Robert Konnik
Harvey Leake
John MacDonald
Omar Mazzoni
John Merando
Gary Michel
William Mindick
Michael Newman
Gerald Nicely
Joshua Park
Tom Sims
Neil Smith
James Stoner
Brandon Swartley
Shanmugan Thamilarasan
James Thomas
Michael Tucker
T. J. Voss
John Waclo
Jennifer Weber
James Wilson
David Zaprazny

When the IEEE-SA Standards Board approved this standard on 8 June 2006, it had the following membership:

Steve M. Mills, *Chair*
Richard H. Hulett, *Vice Chair*
Don Wright, *Past Chair*
Judith Gorman, *Secretary*

Mark D. Bowman
Dennis B. Brophy
William R. Goldbach
Arnold M. Greenspan
Robert M. Grow
Joanna N. Guenin
Julian Forster*
Mark S. Halpin
Kenneth S. Hanus
William B. Hopf
Joseph L. Koepfinger*
David J. Law
Daleep C. Mohla
T. W. Olsen
Glenn Parsons
Ronald C. Petersen
Tom A. Prevost
Greg Ratta
Robby Robson
Anne-Marie Sahazizian
Virginia C. Sulzberger
Malcolm V. Thaden
Richard L. Townsend
Walter Weigel
Howard L. Wolfman

*Member Emeritus

Also included are the following nonvoting IEEE-SA Standards Board liaisons:

Satish K. Aggarwal, *NRC Representative*
Richard DeBlasio, *DOE Representative*
Alan H. Cookson, *NIST Representative*

Michelle Turner
IEEE Standards Program Manager, Document Development

--`,,```,,,,````-`-`,,`,,`,`,,`---
Copyright © 2006 IEEE. All rights reserved.
Copyright The Institute of Electrical and Electronics Engineers, Inc.
Provided by IHS under license with IEEE
No reproduction or networking permitted without license from IHS
Not for Resale

Contents

1. Overview 1

1.1 Scope 1
1.2 Purpose 1

2. Normative references 2

3. Definitions 3

4. General design criteria 3

4.1 General 3
4.2 Safety classification 3
4.3 Function 3
4.4 Capacity and capability 4
4.5 Availability 4
4.6 Independence 7
4.7 Design basis 8

5. Specific design criteria 9

5.1 Transmission system interface 9
5.2 Switchyard interface 10
5.3 Class 1E power system interface 10
5.4 AAC source interface 11

6. Surveillance, control, and test requirements 11

6.1 Surveillance requirements 11
6.2 Control requirements 11
6.3 Test requirements 12

7. Multi-unit considerations 12

7.1 Sharing of PPSs 12
7.2 Shared system capability 12
7.3 Surveillance 12
7.4 Protective systems 12
7.5 Design basis 13
7.6 Shared controls and indication 13

Annex A (informative) Guidelines for preferred power system reliability in a deregulated environment 14

Annex B (informative) Guidelines for transmission system studies to ensure voltage adequacy of preferred power supply 17

Annex C (informative) Bibliography 19

Copyright © 2006 IEEE. All rights reserved.

Copyright The Institute of Electrical and Electronics Engineers, Inc.
Provided by IHS under license with IEEE
No reproduction or networking permitted without license from IHS
Not for Resale

and Electronics Engineers, Inc.
IEEE
itted without license from IHS
Not for Resale

IEEE Standard for Preferred Power Supply (PPS) for Nuclear Power Generating Stations (NPGS)

1. Overview

This standard has seven clauses and two annexes. The first clause defines the scope of this standard, Clause 2 provides references, and Clause 3 provides definitions that are not found in other standards or are essential to the interpretation of the intent of this standard.

The general design criteria of the preferred power supply (PPS) are outlined in Clause 4, and the specific design criteria in Clause 5 describe the interfaces with the transmission system, switchyard, Class 1E power system, and alternate ac (AAC) source. Clause 6 describes the surveillance and test requirements, and Clause 7 describes multi-unit considerations. Annex A provides guidelines that may be used to preserve the reliability of the PPS in a deregulated environment. Annex B provides guidelines for performing transmission system studies to ensure voltage adequacy of PPS. Annex C is the bibliography.

1.1 Scope

This standard describes the design criteria of the PPS and its interfaces with the Class 1E power system, switchyard, transmission system, and AAC source. Figure 1 is a typical interface diagram of the PPS with related power systems.

1.2 Purpose

This standard provides PPS requirements for nuclear power generating stations (NPGSs) and guidance in the areas of AAC power source interfaces with the PPS, physical independence of the PPS power and control circuits, and expanded PPS criteria for multi-unit stations.

Copyright © 2006 IEEE. All rights reserved.

Copyright The Institute of Electrical and Electronics Engineers, Inc.
Provided by IHS under license with IEEE
No reproduction or networking permitted without license from IHS
Not for Resale

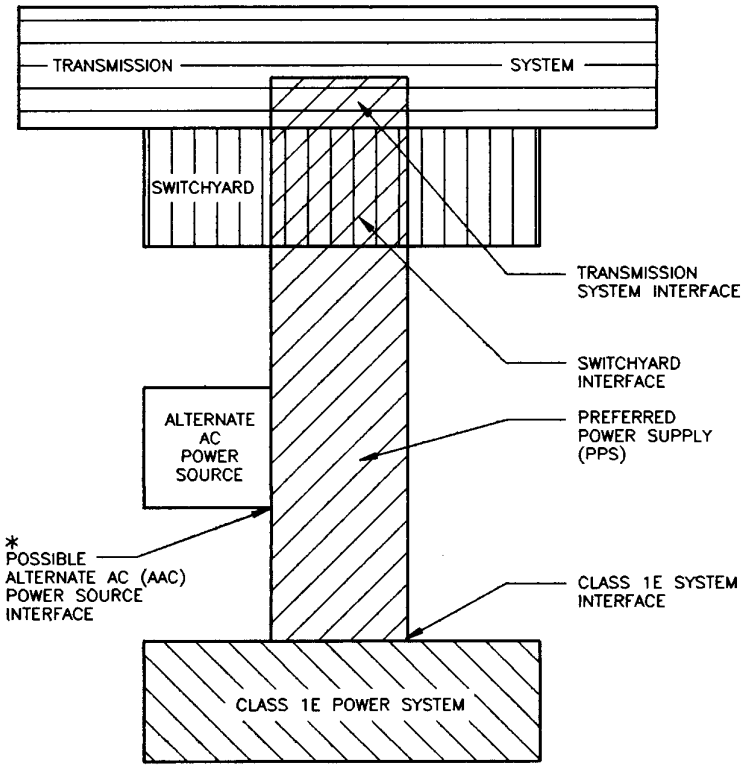

*AAC source interfaces with entities other than the PPS are outside the scope of this standard.

Figure 1—PPS interface diagram

2. Normative references

The following referenced documents are indispensable for the application of this document. For dated references, only the edition cited applies. For undated references, the latest edition of the referenced document (including any amendments or corrigenda) applies.

IEEE Std 308™, IEEE Standard Criteria for Class 1E Power Systems for Nuclear Power Generating Stations.[1, 2]

IEEE Std 741™, IEEE Standard Criteria for the Protection of Class 1E Power Systems and Equipment in Nuclear Power Generating Stations.

[1]IEEE publications are available from the Institute of Electrical and Electronics Engineers, 445 Hoes Lane, P.O. Box 1331, Piscataway, NJ 08855-1331, USA (http://standards.ieee.org/).

[2]The IEEE standards or products referred to in this clause are trademarks of the Institute of Electrical and Electronics Engineers, Inc.

Copyright © 2006 IEEE. All rights reserved.

Copyright The Institute of Electrical and Electronics Engineers, Inc.
Provided by IHS under license with IEEE
No reproduction or networking permitted without license from IHS Not for Resale

3. Definitions

For the purpose of this standard, the following terms and definitions apply. *The Authoritative Dictionary of IEEE Standards Terms* [B2][3] should be referenced for terms not defined in this clause.

3.1 acceptable: Demonstrated to be adequate by the safety analyses of the station.

3.2 alternate ac (AAC) source: An alternating current (ac) power source that is available to and located at or nearby a nuclear power generating station that meets the following requirements:

a) It may be connected to the PPS or the onsite emergency ac power system.

b) It has minimum potential for common-mode failure with PPS or onsite emergency ac power sources.

c) It is available in a timely manner after the onset of a station blackout.

d) It has sufficient capacity and reliability to operate all systems required for the following:

   1) Coping with a station blackout

   2) The time needed to bring the plant to and maintain it in a safe shutdown condition (non-design basis accident)

3.3 preferred power supply (PPS): The power supply from the transmission system to the Class 1E distribution system that is preferred to furnish electric power under accident and post-accident conditions.

3.4 station blackout: The complete loss of alternating current (ac) electric power to the essential and nonessential switchgear buses in a nuclear power generating station (i.e., loss of the preferred power supply concurrent with turbine trip and unavailability of the onsite emergency ac power system). Station blackout does not include the loss of available ac power to buses fed by station batteries through inverters or by alternate ac sources.

4. General design criteria

4.1 General

The PPS shall consist of two or more circuits from the transmission system to the Class 1E distribution system. Some examples of acceptable arrangements are shown in Figure 2, Figure 3, and Figure 4.

4.2 Safety classification

The PPS is not a Class 1E system. Therefore, requirements that are associated with Class 1E installations for redundancy, independence, separation, application of the single-failure criterion, seismic, and equipment qualification do not apply.

4.3 Function

The PPS provides electric power, as required, for the safe shutdown of the station and for the operation of safety systems. The PPS circuits may be used during all modes of operation to supply power to the Class 1E and non-Class 1E buses of the plant.

[3]The numbers in brackets correspond to those of the bibliography in Annex C.

Copyright © 2006 IEEE. All rights reserved.

Copyright The Institute of Electrical and Electronics Engineers, Inc.
Provided by IHS under license with IEEE
No reproduction or networking permitted without license from IHS
Not for Resale

4.4 Capacity and capability

Each circuit of the PPS shall be designed to provide sufficient capacity and capability to power equipment that is required to ensure the following:

a) Specified acceptable fuel design limits and design conditions of the reactor coolant pressure boundary are not exceeded as a result of anticipated operational occurrences.

b) The core is cooled and containment integrity and other vital functions are maintained in the event of plant design basis accidents.

Each PPS, under all operating modes, shall be sized to supply the maximum expected coincident Class 1E and non-Class 1E loads.

4.5 Availability

A minimum of two circuits from the transmission system to the Class 1E power system shall be designed to be available during start-up and normal operation to meet accident, post-accident, and safe shutdown requirements in accordance with the following guidelines:

a) The two circuits may be connected by way of the non-Class 1E distribution system to the redundant Class 1E bus as shown in Figure 2 and Figure 3.

b) The non-Class 1E connections should not compromise the PPS independence requirements.

c) Direct connection of the two circuits to each redundant Class 1E bus as shown in Figure 4 may further enhance availability.

d) A minimum of one PPS circuit shall be designed to be available automatically to provide power to the Class 1E buses within a few seconds following a design basis accident. A second PPS circuit shall be designed to be available within a time period demonstrated to be adequate by the safety analysis of the station.

e) An enhanced design should have two PPS circuits automatically available to provide preferred power to Class 1E buses within a few seconds following a design basis accident.

Copyright © 2006 IEEE. All rights reserved.
--`,,```,,,,````-`-`,,`,,`,`,,`---

Copyright The Institute of Electrical and Electronics Engineers, Inc.
Provided by IHS under license with IEEE
No reproduction or networking permitted without license from IHS Not for Resale

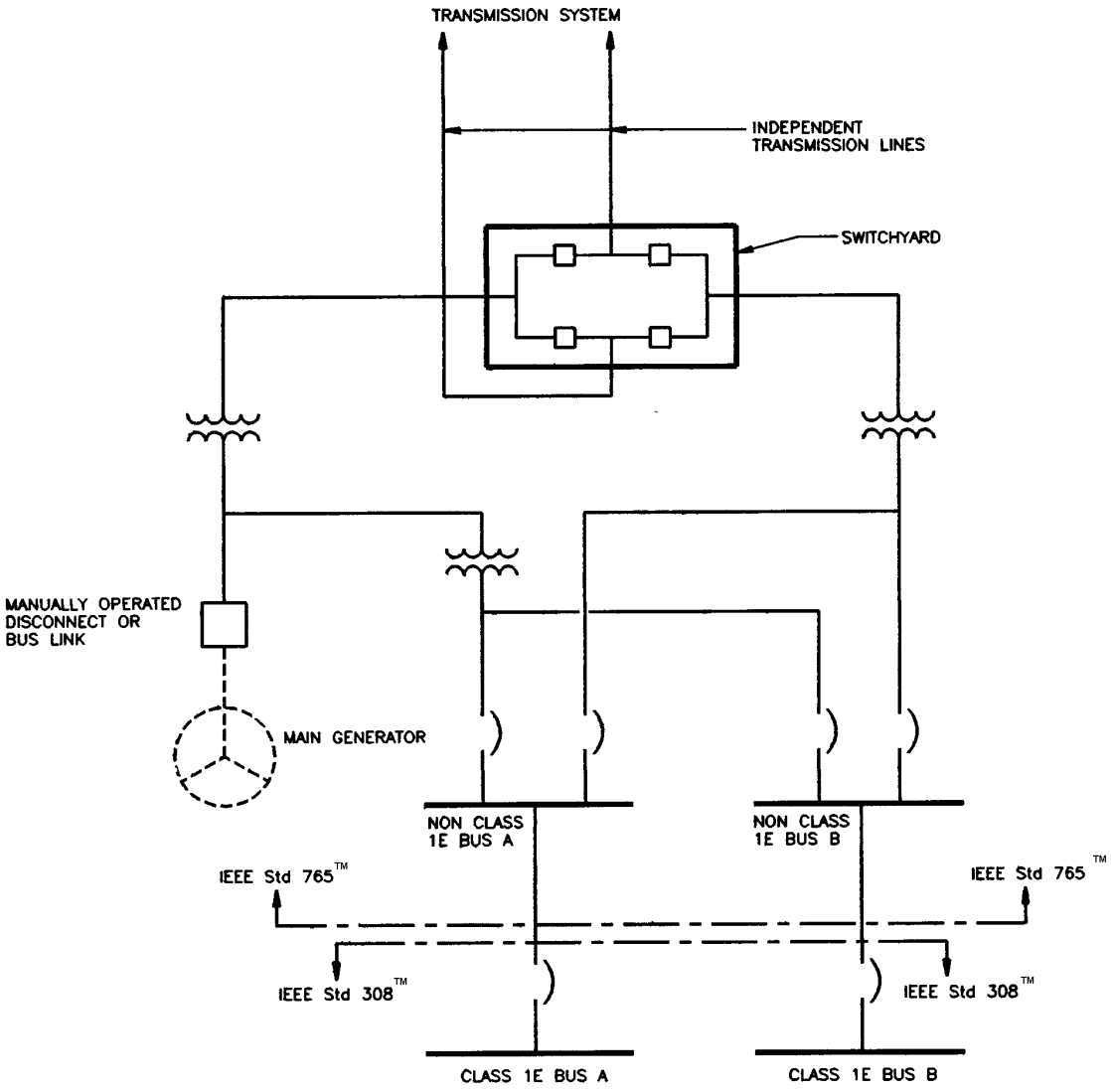

Figure 2—An example of an acceptable PPS design

Copyright © 2006 IEEE. All rights reserved.

Copyright The Institute of Electrical and Electronics Engineers, Inc.
Provided by IHS under license with IEEE
No reproduction or networking permitted without license from IHS
Not for Resale

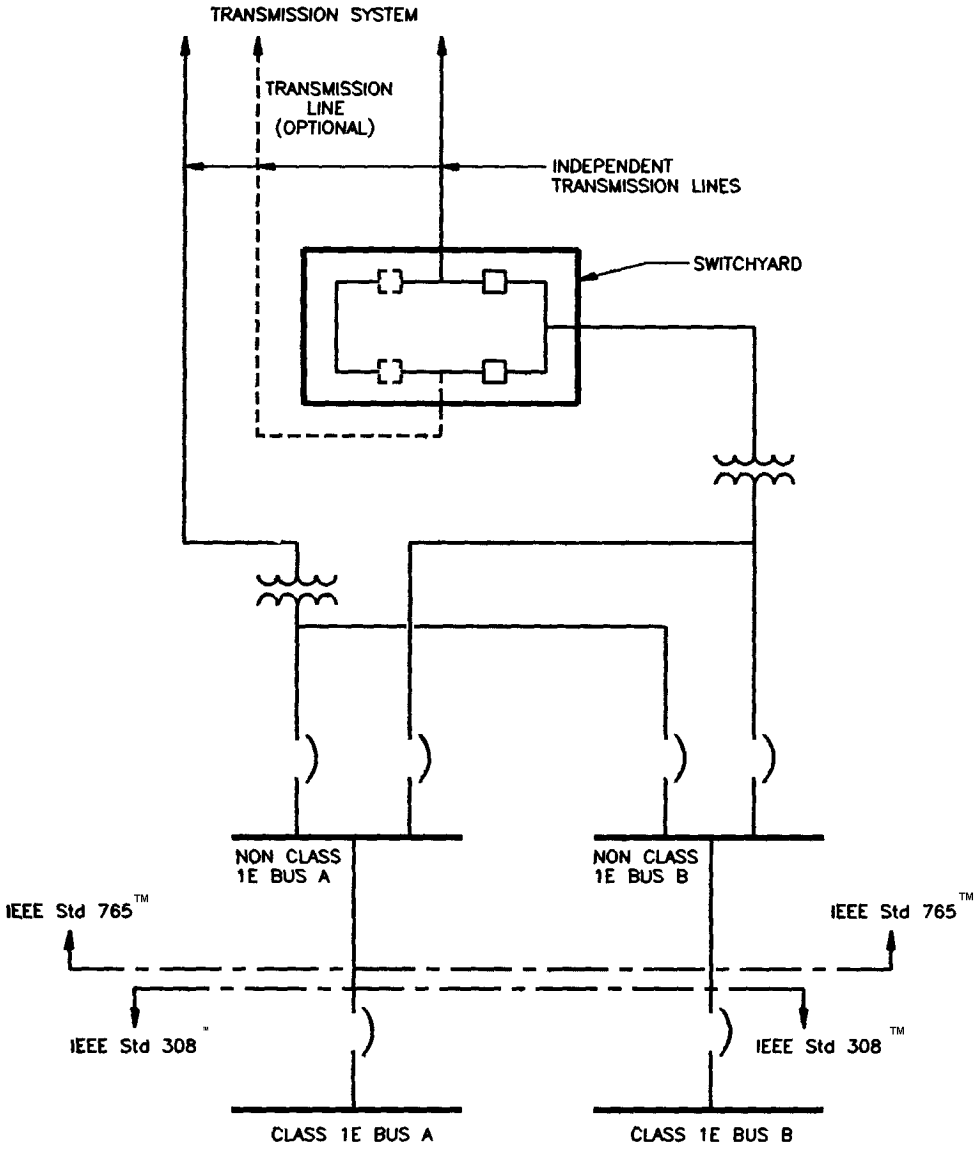

Figure 3—A second example of an acceptable PPS design

Copyright © 2006 IEEE. All rights reserved.

Copyright The Institute of Electrical and Electronics Engineers, Inc.
Provided by IHS under license with IEEE
No reproduction or networking permitted without license from IHS
Not for Resale

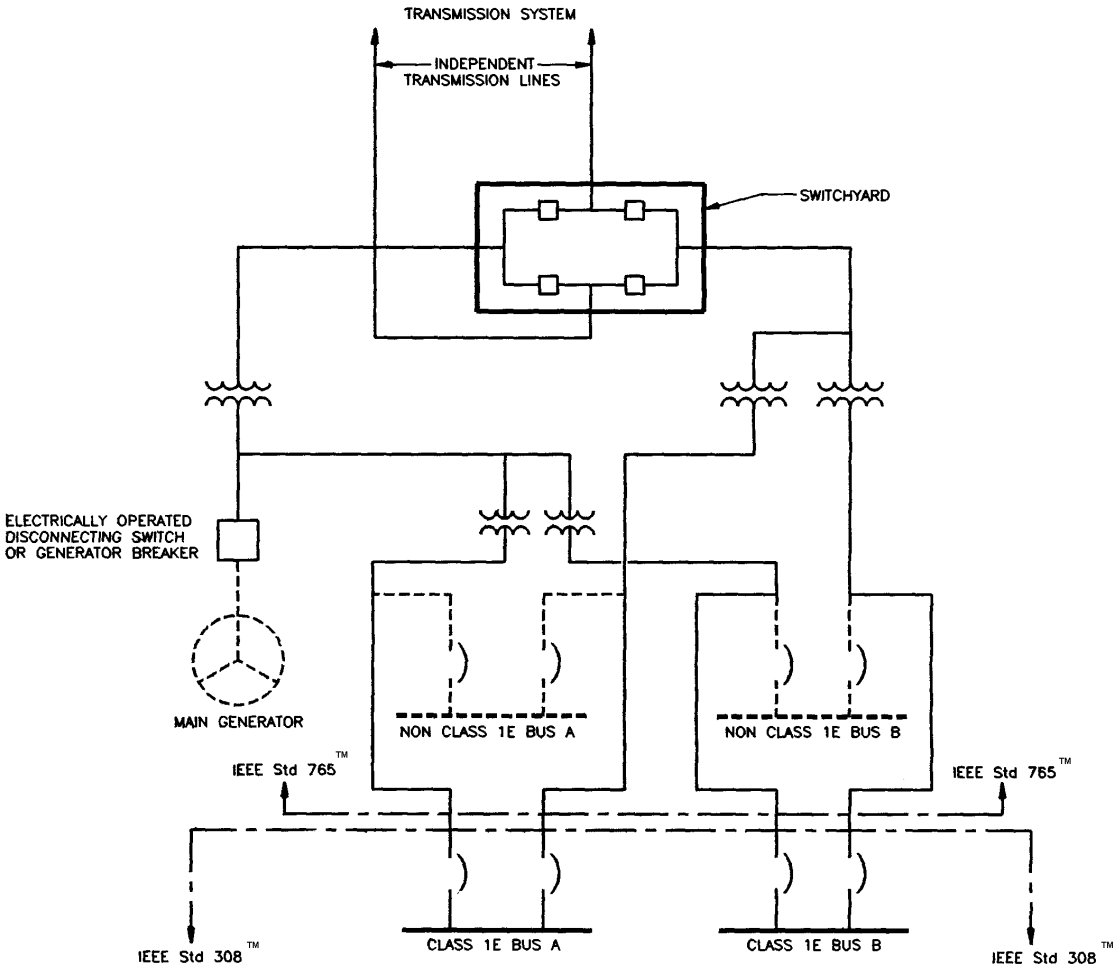

Figure 4—Example of an enhanced PPS design

4.6 Independence

The PPS circuits to the Class 1E power system shall be physically independent, designed, and located to minimize (to the extent practical) the likelihood of simultaneous failure of both PPS circuits under operating, postulated accident, and environmental conditions.

To reduce the likelihood of simultaneous failure of both PPS circuits, the PPS control circuits shall be physically independent from each other and from the PPS power circuits to the extent practical.

If a common takeoff structure is used for both PPS circuits, analysis shall be performed to confirm that the reliability of the common takeoff structure is not lower than the overall reliability of the balance of the PPS circuits.

Copyright © 2006 IEEE. All rights reserved.

Copyright The Institute of Electrical and Electronics Engineers, Inc.
Provided by IHS under license with IEEE
No reproduction or networking permitted without license from IHS
Not for Resale

4.7 Design basis

A specific design basis shall be provided for the PPS system for each NPGS. The design basis shall include as a minimum the following requirements:

a) The design basis shall include station electric loads and systems that use the services of PPS during start-up, normal operation, safe shutdown, accident, and post-accident operation, including the required switching sequences and duration period of energization.

b) The design basis shall include environmental conditions to which the PPS may be subjected during operations. Examples of environmental conditions that may be considered are any of the following:
   - Wind
   - Lightning
   - Ice
   - Temperature variations
   - Snow
   - Flood

c) The design basis shall include station design basis events and operating incidents that could cause degradation of the PPS. Examples of operating incidents that may be considered are any of the following:
   - Equipment maintenance outage
   - Fire
   - Effects of water
   - Equipment failure

d) The design basis shall include identification of transmission system, steady-state, and transient conditions to which the PPS may be subjected when required to perform. Examples that may be considered are any of the following:
   - Switching and lightning surges
   - Voltage ranges—maximum and minimum—for heavy and light load conditions
   - Frequency variation
   - Stability limits

e) The design basis shall include required performance and operating characteristics of PPS equipment. Examples that may be considered are any of the following:
   - Short-circuit withstand capability
   - Equipment capacity
   - Voltage and frequency transient response
   - Voltage regulation limits
   - Step load capability
   - Coordination of protective relaying
   - Grounding

f) The design basis shall include the degree of independence and redundance within the PPS. Examples that may considered are any of the following:
   - Tower and right-of-way separation
   - Direct current (dc) systems
   - Control and protection circuits
   - Raceway routing
   - Switchyard arrangement

 Copyright © 2006 IEEE. All rights reserved.

Copyright The Institute of Electrical and Electronics Engineers, Inc.
Provided by IHS under license with IEEE
No reproduction or networking permitted without license from IHS Not for Resale

g) The design basis shall include details of interfaces of the PPS with the switchyard, transmission system, Class 1E power systems, and AAC power source.

h) The design basis shall include the capability of periodic testing. Examples that may be considered are the following:

— Testing of protective relays

— Operation tests on breakers

— Testing of transfer schemes

i) The design basis shall include the use of PPS circuits for applications other than safe shutdown, accident, and post-accident conditions.

j) The design basis shall include a restoration methodology for realignment of the PPS following the loss of power.

5. Specific design criteria

5.1 Transmission system interface

5.1.1 Description

The transmission system interface shall consist of a minimum of two transmission lines not necessarily on separate right-of-ways. Where there are more than two lines available from the transmission system, any combination of two lines may be used as PPS circuits, provided the requirements of this standard are met.

5.1.2 Reliability

The PPS transmission system reliability shall be determined using analytical or modeling techniques to ensure that the NPGS PPS requirements are met with future planned transmission and generation facilities considered.

5.1.3 Independence

The two lines from the transmission system, which provide the PPS to the Class 1E distribution system, shall be designed to minimize their simultaneous loss as a result of the failure of any transmission tower or failure from crossing transmission lines.

The PPS circuits originating from the transmission system shall be designed to minimize their simultaneous failure as a result of the failure of a single breaker, switchyard bus, switchgear bus, or cable.

5.1.4 Transmission system studies (TSS)

Transmission system studies shall be performed to demonstrate that the PPS is not degraded below a level that results in unnecessary challenges to nuclear safety systems as a result of contingencies such as any of the following single events:

a) Loss of the nuclear power generating unit

b) Loss of the largest (or most significant) generating unit

c) Loss of the largest (or most significant) transmission circuit or intertie

d) Loss of the largest (or most significant) load

System studies shall be reviewed periodically for transmission, generation, and system load changes to ensure that the design basis of the PPS remains valid for all reasonably expected system conditions. Refer to

Copyright © 2006 IEEE. All rights reserved.

Copyright The Institute of Electrical and Electronics Engineers, Inc.
Provided by IHS under license with IEEE
No reproduction or networking permitted without license from IHS
Not for Resale

Annex B for further guidelines for transmission system studies to ensure voltage adequacy of preferred power supply.

5.2 Switchyard interface

5.2.1 Description

Electrical equipment and structures required for the interface of the transmission circuit of the PPS with the Class 1E system (see Figure 1) shall be designed to the criteria set forth in this standard. The balance of the switchyard used for other functions is not subject to these criteria.

5.2.2 Independence

The physical design of the switchyard should minimize the probability of a single incidence of equipment failure causing the simultaneous or subsequent loss of both PPS circuits.

5.2.3 Electrical faults

The switchyard equipment shall be designed to withstand stresses from the worst-case faults.

5.2.4 Protective systems

Protective systems shall be provided to minimize the probability of loss of the PPS. The following design features are suggested for guidance:

a) Primary and backup relay systems
b) Breaker failure relaying
c) Dual battery systems
d) Dual breaker trip coils

5.3 Class 1E power system interface

5.3.1 Description

A minimum of two PPS circuits shall be provided to the Class 1E power system.

5.3.2 Independence

Each PPS circuit may be utilized to supply both redundant Class 1E buses, as shown in Figure 2, Figure 3, and Figure 4.

5.3.3 Connections with Class 1E systems

The connection between the preferred power supply and the Class 1E power systems shall be made at the input terminals of the Class 1E circuit breaker. (The Class 1E circuit breaker is located in safety class structures in accordance with IEEE Std 308.[4])

When transfer schemes are used, operation of the Class 1E breakers (Figure 4) or non-Class 1E breakers (Figure 2 and Figure 3) to transfer from one PPS source to another may be accomplished by use of the following:

[4]Information on references can be found in Clause 2.

Copyright © 2006 IEEE. All rights reserved.

--`,,```,,,,````-`-`,,`,,`,`,,`---

Copyright The Institute of Electrical and Electronics Engineers, Inc.
Provided by IHS under license with IEEE
No reproduction or networking permitted without license from IHS Not for Resale

a) Manual transfer schemes

b) Automatic live-bus transfer

c) Automatic dead-bus transfer

Where automatic bus transfers are used, the adequacy of the transfer schemes shall be demonstrated.

Exposure to an increase in available fault current in excess of equipment rating may occur during bus transfers when two power sources are momentarily connected in parallel to a Class 1E bus. During parallel operation from two sources, the increase in available fault current to the bus requires either equipment with much higher fault duty ratings or minimized parallel operating time.

5.3.4 PPS voltage degradation

PPS voltage degradation shall be detectable at the Class 1E bus to which the PPS source is connected. Selection of degraded voltage and time delay setpoints shall be in accordance with IEEE Std 741. A PPS voltage degradation condition shall be alarmed in the control room. The affected PPS circuits shall be automatically disconnected from the Class 1E buses on sensing PPS degradation to a low-voltage condition below the minimum value that will assure proper operation of all electrical loads required for mitigation of design basis events.

5.4 AAC source interface

The AAC source may interface with the PPS. This interface shall

a) Be maintained electrically open except when needed to provide its intended function or during testing.

b) Avoid vulnerability to a likely weather-related event or to single active failure that could render both the AAC power source and the PPS inoperable. As an example, a switchyard common to both the AAC source and the PPS would be considered such a single-point vulnerability.

c) Minimize degradation to the availability of the PPS.

6. Surveillance, control, and test requirements

6.1 Surveillance requirements

Status indication (open-close) of PPS circuit-interrupting devices shall be provided in the main control room. Undervoltage alarms shall be provided in the main control room for the dc systems associated with the PPS circuit-interrupting devices. An alarm to sense voltage degradation, as required in 5.3.4, shall be provided in the main control room. Indication of the PPS voltage and frequency shall be provided in the main control room.

6.2 Control requirements

Control of all circuit-interrupting devices connecting the PPS to the station auxiliary buses shall be provided in the main control room.

Copyright © 2006 IEEE. All rights reserved.

Copyright The Institute of Electrical and Electronics Engineers, Inc.
Provided by IHS under license with IEEE
No reproduction or networking permitted without license from IHS Not for Resale

6.3 Test requirements

6.3.1 Preoperational system tests

The preoperational system tests shall be performed with all components installed. These tests shall demonstrate that the equipment and system are operational. The following requirements shall be demonstrated:

a) All required Class 1E and non-Class 1E loads can be adequately powered from their designated PPS.

b) The loss of the PPS can be detected.

c) Transfers between PPS circuits can be accomplished.

d) The dc supporting system (e.g., batteries and chargers) associated with the PPS can meet the requirements of their design loads.

6.3.2 Periodic equipment tests

Periodic tests shall be performed to the extent practical to detect the deterioration of equipment toward any condition impacting performance below that required for mitigation of design basis events.

6.3.3 Periodic systems tests

The system tests referred to in the preoperational system tests (see 6.3.1) shall also be performed at scheduled intervals.

7. Multi-unit considerations

7.1 Sharing of PPSs

At a multi-unit station, the PPS may be shared between two or more units.

7.2 Shared system capability

PPS circuits that are shared among units shall be capable of simultaneously supplying the coincident loads required for each of the units for the credible range of operation contained in the NPGS design and licensing bases.

7.3 Surveillance

Status indication of the shared PPS circuit-interrupting devices shall be located in the main control room of each unit that is sharing these facilities.

7.4 Protective systems

Protective systems shall be provided to minimize (to the extent practical) the probability of loss of the shared PPS. Protective systems shall be designed to minimize the impact of events in one unit on the other unit(s).

 Copyright © 2006 IEEE. All rights reserved.

Copyright The Institute of Electrical and Electronics Engineers, Inc.
Provided by IHS under license with IEEE
No reproduction or networking permitted without license from IHS Not for Resale

7.5 Design basis

The design basis shall specifically address the degree of independence of the PPSs of each unit. The design basis should address shared major equipment, the impact of their loss on each unit, interactions among units, and expected operational occurrences and disturbances on each unit.

7.6 Shared controls and indication

The capability to monitor the availability of the PPS in the control room of each unit shall be provided. The ability to disconnect one unit from its PPS shall not affect the PPS availability to the other unit(s). When the PPS is disconnected from the transmission system, indication shall be provided at the control board of each unit. If controls are located at multiple points, interlocks shall be provided to ensure that the control action will be from only one location at any given time, with appropriate indications as to which location has access to control.

Copyright © 2006 IEEE. All rights reserved.

Copyright The Institute of Electrical and Electronics Engineers, Inc.
Provided by IHS under license with IEEE
No reproduction or networking permitted without license from IHS Not for Resale

Annex A

(informative)

Guidelines for preferred power system reliability in a deregulated environment

A.1 Purpose

As the electric utility industry moves toward deregulation, the reliability of the preferred power system to a nuclear power generating station (NPGS) must be maintained. The purpose of this annex, as a natural extension of this standard, is to identify the design bases and other interface requirements that should be considered and acknowledged between a NPGS, Independent System Operators (ISOs), Regional Transmission Operator (RTO), or other organizations not corporately aligned with the utility. The licensing bases for each NPGS determines the specific functional requirements and limits of the preferred power system with respect to the nuclear facility. This annex does not try to establish specific criteria, but rather identifies areas in a suggested format that need to be considered in the preservation of the reliability of the preferred power system in a deregulated environment.

A.2 Discussion

The need for a reliable preferred power system, with the capacity and capability to function in support of a NPGS, requires the close cooperation and interface of the utility's transmission, system planning, and nuclear organizations. In a regulated environment, this cooperation is facilitated by interface documents, procedures, and a common management structure. In a deregulated environment, organizations that are required to operate and maintain the grid and preferred power system may be independent from the NPGS and operate on an independent, commercial platform. The interface between the NPGS and these organizations may become a matter of contract rather than procedure. It is, therefore, in the NPGS's best interest to identify specifically the requirements of the preferred power system that must be maintained by an ISO or other organization to support the licensing and design basis of the nuclear facility. Furthermore, in order for a NPGS to operate, it must meet its Technical Specifications. This demands that clear and unambiguous requirements exist between the NPGS and the preferred power provider.

A.3 Preferred power system interface

The following, in a suggested format, provides the structure of an agreement document and the suggested contents to ensure that all parties understand their responsibilities in the design, maintenance, and operation of the PPS. The requirements presented in the body of this standard, if not specifically cited below, should be considered together with the NPGS's unique licensing/design basis requirements.

a) *Introduction and general overview*
In this section a discussion should be presented that identifies the need for the document and key areas within the document. Regulatory commitments may be identified and discussed. System configuration, operational philosophy, and general programs and procedures that govern may also be discussed here.

b) *Responsibilities*
In this section, organizations should be identified along with their responsibilities and lines of communication and interface required to ensure a reliable preferred power system. As an example, if it is required that an organization maintain the analysis that determines minimum and maximum

 Copyright © 2006 IEEE. All rights reserved.

Copyright The Institute of Electrical and Electronics Engineers, Inc.
Provided by IHS under license with IEEE
No reproduction or networking permitted without license from IHS Not for Resale

voltages, that organization should be identified in this section. Clear boundaries of responsibility and policy should also be defined, such as the distinction between maintenance and design activities, vehicle access, communication, and so on.

c) *Design and operating requirements*
In this section, specific requirements such as the following should be specified:

- The number of transmission circuits required to be in service for normal, startup, shutdown, and accident conditions
- The real power and reactive power demand of the NPGS on the PPS for normal, startup, and accident scenarios
- The minimum and maximum voltage needed to support the NPGS during startup, shutdown, and accident scenarios
- Identification of operational and initiating events that cannot compromise the requirements of the preferred power system, i.e., those contingencies listed in 5.1.4
- Switchyard normal voltage schedule
- Minimum and maximum real power and reactive power generation limits
- Grid frequency and stability operating limits
- NPGS unique requirements such as independence, environmental factors, and single failure criteria
- Required actions if a specified condition cannot be maintained
- Required actions for prompt restoration of power in the event of loss of all preferred power to the NPGS
- Any surveillance requirements needed to maintain the operability of the preferred power system that are analytically derived (e.g., predicted post-trip voltage) and/or monitored by organizations (e.g., ISO or RTO) other than the NPGS

d) *Maintenance requirements*
In this section, clear boundaries of the various organizations responsible for ensuring that the preferred power system facilities are maintained and specific equipment required to be maintained by those organizations are identified, such as the following:

- High-voltage circuit breakers
- Main, unit, and startup transformers and autotransformers, including spares
- Switchyard bus conductors, insulators, surge arrestors, and supporting equipment
- Potential devices
- Line traps and coupling capacitors
- Grounding equipment
- Generator, transformer, and system relaying
- Monitoring systems
- Metering equipment
- Switchyard batteries and chargers
- Fire protection systems
- Other equipment unique to the NPGS
- Shunt reactors, capacitors, etc.
- Periodic testing

e) *Switching requirements*
In this section the requirements and responsibilities for switching of high-voltage equipment in the NPGS switchyard/transformer yard should be described. These include the following:

Copyright © 2006 IEEE. All rights reserved.

Copyright The Institute of Electrical and Electronics Engineers, Inc.
Provided by IHS under license with IEEE
No reproduction or networking permitted without license from IHS
Not for Resale

— Clearly defined operational control boundaries of responsibility for switching and equipment clearance/lockout activities. For example, the generator output breakers (including manual disconnects), the breakers feeding the startup/reserve auxiliary transformer(s), and all equipment on the NPGS side of these devices are controlled by the NPGS operations personnel. All equipment on the grid side of these devices are controlled by the system operations personnel.

— Provisions to establish equipment clearances across this operational control boundary, when necessary, with any given clearance being unquestionably controlled by only one organization (systems operation or NPGS operations). For example, a high-voltage bus clearance would generally be controlled by system operations. However, the clearance might require tagging and lockout of the generator output breakers that are normally controlled by the NPGS operations. Provisions might be made to allow system operations to control these breakers for the specific purpose of the needed bus clearance.

— A process for requesting prearranged equipment clearances that allow each organization to review and approve the switching activities, scheduling, and sequence of events for equipment clearances.

— Procedures that require prior notification for any switching activities in the NPGS switchyard/transformer yard, pre-job briefings immediately before commencing switching to review the risks involved, and close communications throughout the switching evolution.

— Training, procedures, or other means to ensure that common terms and equipment nomenclatures are used by both system operations and NPGS operations personnel.

Procedures that establish any special considerations for communications needs during adverse or severe weather events or other emergencies when emergency facilities might be activated. For example, alternate communications means, etc.

 Copyright © 2006 IEEE. All rights reserved.

Copyright The Institute of Electrical and Electronics Engineers, Inc.
Provided by IHS under license with IEEE
No reproduction or networking permitted without license from IHS Not for Resale

Annex B

(informative)

Guidelines for transmission system studies to ensure voltage adequacy of preferred power supply

B.1 Purpose and objective

The purpose of this annex is to provide an acceptable methodology for performing Transmission System Studies (TSSs) to ensure that the design basis of the preferred power system (PPS) post-trip voltage remains valid for all reasonably expected system conditions.

B.2 Background

TSSs are typically performed by a Transmission Planning/Operations organization, which usually is separate from the Nuclear organization. Good communications across organizations is critical when it comes to defining the plant/grid interfaces. Annex A stresses the need for a strong interface between the transmission system owner/operator and the plant. Important interfaces are input data, modeling methods, design and licensing bases, and interpretation of TSS. The plant should supply worst-case station service loading for the different plant operating conditions, including any load transfers or additions that may result following a plant trip. The Transmission Planning organization should take that station service loading and consider transmission contingencies under different transmission system loading conditions and configurations. Many times the information supplied by the plant contains contingencies and when coupled with the transmission system contingencies, the results of the studies may show that little or no margin exists. This is primarily due to the evaluation of too many unrelated simultaneous contingencies.

TSSs have also been the subject of NRC scrutiny and have been the subject of several NRC Information Notices: IN 95-37 [B3], IN 2000-06 [B4], and NRC Regulatory Risk Issue Summary 2004-05 [B5]. This annex will define an analytical approach to TSS that is conservative, but not overly conservative.

B.3 Discussion

The purpose of IEEE Std 765, in part, is to provide detailed design and operating criteria for the PPS (the supply from the transmission system to the Class 1E distribution system) to ensure a design commensurate with its intended function and provide sufficient detail to interpret, clarify, and expand guidance given in IEEE Std 308.

Clause 4 of this standard states that the PPS should consist of two or more circuits from the transmission system to the Class 1E distribution system, each designed to provide sufficient capacity and capability. A minimum of one PPS circuit shall be designed to be available automatically to provide power to the Class 1E buses within a few seconds following a design basis accident. A second PPS circuit shall be designed to be available within a time period demonstrated to be adequate by the safety analysis of the station.

Copyright © 2006 IEEE. All rights reserved.

Copyright The Institute of Electrical and Electronics Engineers, Inc.
Provided by IHS under license with IEEE
No reproduction or networking permitted without license from IHS
Not for Resale

B.4 Study methods

The study of PPS adequacy is often performed in two different environments: a) the traditional Transmission Planning Study validates the overall design of the transmission system for the current year and usually a future year look-ahead, and b) Transmission Operating Studies are performed generally for an upcoming year and are used to identify any transmission operating restrictions and/or compensatory measures for expected system loading scenarios and system configurations. Additionally, real-time Operational Studies may be performed to ensure that the transmission system is being operated consistent with the philosophy reflected in the transmission planning study and operating studies and to identify and evaluate any unusual conditions that may jeopardize operability of the NPGS PPS.

TSSs performed for a NPGS are intended to demonstrate that the transmission system, including all connected generation, is designed and constructed with enough capacity and capability to provide the nuclear plant's station service load needed to shutdown and mitigate a postulated accident. This objective is accomplished by providing sufficient flexibility in the transmission system such that a transmission element outage does not jeopardize the capability and capacity of the PPS. These TSSs should also consider the worst-case bulk system power transfers.

B.5 Criteria

TSSs that are input to nuclear plant voltage analyses should use the following criteria, which are determined by the nuclear plant. Specific design basis limits such as allowable low-voltage limits and voltage drop (difference between the switchyard voltage during normal operation and the post-trip voltage) at the NPGS shall be provided to the PSS Transmission Operator (TO). Periodically, these design limits should be verified by the NPGS to be correctly used in the TSSs. TSSs may need to be revised when the input data, such as the plant's load requirements or the transmission system configuration, changes.

a) Minimum required steady-state post-trip grid voltages should be established such that sufficient voltage would be supplied to the onsite plant distribution system in the event of a postulated design basis event at the plant and operating/shutdown of other nuclear operating units at the site as required by the licensing bases.
   Concurrently, TSSs should ensure that the requirements of nuclear plants are met under the range of transmission operating conditions anticipated, assuming that transmission elements may be unavailable, such as during periods of transmission system or neighboring generator maintenance. Examples that should be considered are as follows:

   — Loss of the largest (or most significant) generating unit
   — Loss of the largest (or most significant) transmission circuit or intertie
   — System loading

   The above practices are intended to facilitate the design and operation of the transmission system to minimize the anticipated occurrences of grid conditions resulting in unacceptable PPS voltages at nuclear plant switchyards.

b) Maximum acceptable grid voltage should be established based on light in-house plant loading, such as during refueling.

c) The Transmission Provider/System Operator should have provisions in place to a) recognize when conditions exist that would result in unacceptable PPS voltages at nuclear plant switchyards, b) promptly notify nuclear plant operating personnel of such actual or anticipated conditions, and c) restore conditions to an acceptable level, if possible.

d) Stability studies.
   This annex does not cover traditional generator transient stability studies.

 Copyright © 2006 IEEE. All rights reserved.

Copyright The Institute of Electrical and Electronics Engineers, Inc.
Provided by IHS under license with IEEE
No reproduction or networking permitted without license from IHS Not for Resale

Annex C

(informative)

Bibliography

[B1] 10CFR50, Title 10, U.S. Code of Federal Regulations, Part 50, Appendix A, General Design Criteria 17 and General Design Criteria 18.

[B2] IEEE 100, The Authoritative Dictionary of IEEE Standards Terms, Seventh Edition. New York: Institute of Electrical and Electronics Engineers, Inc.

[B3] NRC Information Notice IN 95-37, “Inadequate Offsite Power System Voltages During Design Basis Events”

[B4] NRC Information Notice IN 2000-06, “Offsite Power Voltage Inadequacies”

[B5] NRC Regulatory Risk Issue Summary 2004-05, “Grid Reliability and the Impact on Plant Risk and the Operability of Offsite Power”

[B6] North American Electric Reliability Council (NERC) Planning Standard I.A, “Transmission Systems.”

Copyright © 2006 IEEE. All rights reserved.

Copyright The Institute of Electrical and Electronics Engineers, Inc.
Provided by IHS under license with IEEE
No reproduction or networking permitted without license from IHS
Not for Resale