IEEE Recommended Practice for Seismic Design of Substations

IEEE Power Engineering Society

Sponsored by the
Substations Committee

693™

IEEE
3 Park Avenue
New York, NY 10016-5997, USA

8 May 2006

IEEE Std 693™-2005
(Revision of IEEE Std 693-1997)

Copyright The Institute of Electrical and Electronics Engineers, Inc.
Provided by IHS under license with IEEE
No reproduction or networking permitted without license from IHS

Not for Resale

and Electronics Engineers, Inc.
IEEE
nitted without license from IHS
Not for Resale

Recognized as an
American National Standard (ANSI)

IEEE Std 693™-2005
(Revision of
IEEE Std 693-1997)

IEEE Recommended Practice for Seismic Design of Substations

Sponsor

Substations Committee
of the
IEEE Power Engineering Society

Approved 16 March 2006

American National Standards Institute

Approved 8 November 2005

IEEE-SA Standards Board

--`,,```,,,,````-`-`,,`,,`,`,,`---

Copyright The Institute of Electrical and Electronics Engineers, Inc.
Provided by IHS under license with IEEE
No reproduction or networking permitted without license from IHS

Not for Resale

Abstract: Seismic design recommendations for substations, including qualification of each equipment type, are discussed. Design recommendations consist of seismic criteria, qualification methods and levels, structural capacities, performance requirements for equipment operation, installation methods, and documentation.
Keywords: anchorage, conductor, electrical equipment, damping, dynamic analysis, loads, projected performance, required response spectrum, seismic qualification, shake table, sine beat, static coefficient analysis, support structure, suspended equipment, time history

The Institute of Electrical and Electronics Engineers, Inc.
3 Park Avenue, New York, NY 10016-5997, USA

Copyright © 2006 by the Institute of Electrical and Electronics Engineers, Inc.
All rights reserved. Published 8 May 2006. Printed in the United States of America.

IEEE is a registered trademark in the U.S. Patent & Trademark Office, owned by the Institute of Electrical and Electronics Engineers, Incorporated.

Print: ISBN 0-7381-4844-X SH95391
PDF: ISBN 0-7381-4845-8 SS95391

No part of this publication may be reproduced in any form, in an electronic retrieval system or otherwise, without the prior written permission of the publisher.

Copyright The Institute of Electrical and Electronics Engineers, Inc.
Provided by IHS under license with IEEE
No reproduction or networking permitted without license from IHS Not for Resale

IEEE Standards documents are developed within the IEEE Societies and the Standards Coordinating Committees of the IEEE Standards Association (IEEE-SA) Standards Board. The IEEE develops its standards through a consensus development process, approved by the American National Standards Institute, which brings together volunteers representing varied viewpoints and interests to achieve the final product. Volunteers are not necessarily members of the Institute and serve without compensation. While the IEEE administers the process and establishes rules to promote fairness in the consensus development process, the IEEE does not independently evaluate, test, or verify the accuracy of any of the information contained in its standards.

Use of an IEEE Standard is wholly voluntary. The IEEE disclaims liability for any personal injury, property or other damage, of any nature whatsoever, whether special, indirect, consequential, or compensatory, directly or indirectly resulting from the publication, use of, or reliance upon this, or any other IEEE Standard document.

The IEEE does not warrant or represent the accuracy or content of the material contained herein, and expressly disclaims any express or implied warranty, including any implied warranty of merchantability or fitness for a specific purpose, or that the use of the material contained herein is free from patent infringement. IEEE Standards documents are supplied "**AS IS**."

The existence of an IEEE Standard does not imply that there are no other ways to produce, test, measure, purchase, market, or provide other goods and services related to the scope of the IEEE Standard. Furthermore, the viewpoint expressed at the time a standard is approved and issued is subject to change brought about through developments in the state of the art and comments received from users of the standard. Every IEEE Standard is subjected to review at least every five years for revision or reaffirmation. When a document is more than five years old and has not been reaffirmed, it is reasonable to conclude that its contents, although still of some value, do not wholly reflect the present state of the art. Users are cautioned to check to determine that they have the latest edition of any IEEE Standard.

In publishing and making this document available, the IEEE is not suggesting or rendering professional or other services for, or on behalf of, any person or entity. Nor is the IEEE undertaking to perform any duty owed by any other person or entity to another. Any person utilizing this, and any other IEEE Standards document, should rely upon the advice of a competent professional in determining the exercise of reasonable care in any given circumstances.

Interpretations: Occasionally questions may arise regarding the meaning of portions of standards as they relate to specific applications. When the need for interpretations is brought to the attention of IEEE, the Institute will initiate action to prepare appropriate responses. Since IEEE Standards represent a consensus of concerned interests, it is important to ensure that any interpretation has also received the concurrence of a balance of interests. For this reason, IEEE and the members of its societies and Standards Coordinating Committees are not able to provide an instant response to interpretation requests except in those cases where the matter has previously received formal consideration. At lectures, symposia, seminars, or educational courses, an individual presenting information on IEEE standards shall make it clear that his or her views should be considered the personal views of that individual rather than the formal position, explanation, or interpretation of the IEEE.

Comments for revision of IEEE Standards are welcome from any interested party, regardless of membership affiliation with IEEE. Suggestions for changes in documents should be in the form of a proposed change of text, together with appropriate supporting comments. Comments on standards and requests for interpretations should be addressed to:

Secretary, IEEE-SA Standards Board
445 Hoes Lane
Piscataway, NJ 08854
USA

NOTE—Attention is called to the possibility that implementation of this standard may require use of subject matter covered by patent rights. By publication of this standard, no position is taken with respect to the existence or validity of any patent rights in connection therewith. The IEEE shall not be responsible for identifying patents for which a license may be required by an IEEE standard or for conducting inquiries into the legal validity or scope of those patents that are brought to its attention.

Authorization to photocopy portions of any individual standard for internal or personal use is granted by the Institute of Electrical and Electronics Engineers, Inc., provided that the appropriate fee is paid to Copyright Clearance Center. To arrange for payment of licensing fee, please contact Copyright Clearance Center, Customer Service, 222 Rosewood Drive, Danvers, MA 01923 USA; +1 978 750 8400. Permission to photocopy portions of any individual standard for educational classroom use can also be obtained through the Copyright Clearance Center.

Copyright The Institute of Electrical and Electronics Engineers, Inc.
Provided by IHS under license with IEEE
No reproduction or networking permitted without license from IHS
Not for Resale

Introduction

This introduction is not part of IEEE Std 693-2005, IEEE Recommended Practice for Seismic Design of Substations.

This revision of IEEE Std 693-1997 was developed as a recommended practice for the seismic design of substations. This recommended practice emphasizes the qualification of electrical equipment. Nuclear Class 1E equipment is not covered by this recommended practice, but it is covered by IEEE Std 344™.

This recommended practice is intended to establish standard methods of providing and validating the seismic withstand capability of electrical substation equipment. It provides detailed test and analysis methods for each type of major equipment or component found in electrical substations.

This recommended practice is intended to assist the substation user or operator in providing substation equipment that will have a high probability of withstanding seismic events to predefined ground acceleration levels. It establishes standard methods of verifying seismic withstand capability, which gives the substation designer the ability to select equipment from various manufacturers, knowing that the seismic withstand rating of each manufacturer's equipment is an equivalent measure.

This recommended practice is also intended to guide the manufacturers of power equipment in the seismic design and in demonstrating and documenting the seismic withstand capability of their product in a form that can be universally accepted.

Although most damaging seismic activity occurs in limited areas, many additional areas could experience an earthquake with forces capable of causing great damage. This recommended practice should be used in all areas that may experience earthquakes.

It is the hope of those who worked on the development of this recommended practice that these standard methods of verifying seismic withstand capability will lead to better earthquake performance and to lower qualification costs.

Notice to users

Errata

Errata, if any, for this and all other recommended practices can be accessed at the following URL: http://standards.ieee.org/reading/ieee/updates/errata/index.html. Users are encouraged to check this URL for errata periodically.

Interpretations

Current interpretations can be accessed at the following URL: http://standards.ieee.org/reading/ieee/interp/index.html.

Copyright © 2006 IEEE. All rights reserved.

Copyright The Institute of Electrical and Electronics Engineers, Inc.
Provided by IHS under license with IEEE
No reproduction or networking permitted without license from IHS

Not for Resale

Patents

Attention is called to the possibility that implementation of this recommended practice may require use of subject matter covered by patent rights. By publication of this recommended practice, no position is taken with respect to the existence or validity of any patent rights in connection therewith. The IEEE shall not be responsible for identifying patents or patent applications for which a license may be required to implement an IEEE standard or for conducting inquiries into the legal validity or scope of those patents that are brought to its attention.

Participants

The following is a list of participants in the Seismic Design of Substations Working Group.

Rulon Fronk, *Chair*
Eric Fujisaki, *Vice Chair*
Alan King, *Co-Vice Chair*
William (Woody) Savage, *Secretary*

Larry Bowie
Steve Brown
David Brucker
Terry Burley
Philip Caldwell
Ron Campos
Florian Costa
Jean-Bernard Dastous
Mike Dickinson
Lonnie Elder
Keith Ellis
Willie Freeman
Joseph Graziano
Vincente Guerrero
William E. Gundy
Husein Hasan
Carl Horvath
John Irvin
Carl Johnson
Leon Kempner Jr.
Kamran Khan
Donald Kleyweg Jr.
Eric Kress
Tim Little
Alberto López
Kevin Macon
Kelly Merz
Peter Meyer
Barry Miller
Michael Miller
Philip Mo
Jon Mochizuki
Al Molner
Timothy Moore
Jerry Mundon
Dennis Ostrom
Helen Petersen
Jean-Robert Pierre
John Randolph
Craig Riker
Damaso Roldan
Wolfgang Saad
Anshel Schiff
Julia Shaughnessy
Gerald Stewart
Robert Stewart
Charles Todd
Ron Tognazzini
Mark Williams
Pedro Zazueta

Copyright The Institute of Electrical and Electronics Engineers, Inc.
Provided by IHS under license with IEEE
No reproduction or networking permitted without license from IHS
Copyright © 2006 IEEE. All rights reserved.
Not for Resale

The following members of the individual balloting committee voted on this recommended practice. Balloters may have voted for approval, disapproval, or abstention.

William Ackerman
David Aho
Richard Aichinger
Stan J. Arnot
Sabir Azizi-Ghannad
Munnu Bajpai
Thomas Barnes
Stan Billings
Wallace Binder
Anne Bosma
Steven Brown
Ted Burse
Carl Bush
Weijen Chen
Ron Campos
Giuseppe Carbone
Robert Carruth
Donald Cash
Garry Chapman
Keith Chow
Michael Comber
Jerry Corkran
John Crouse
William Darovny
Jean-Bernard Dastous
R. Daubert
Matthew Davis
Nicholas DeSantis
Frank Denbrock
Guru Dutt Dhingra
Jerry DiSciullo
Dieter Dohnal
Denis Dufournet
James Edmonds
Gary Engmann
Mehrdad Eskandary
Eric Fujisaki
Harry Gianakouros
David Gilmer
Joseph Graziano
William Griesacker
Randall Groves
Robert Grunert
Jim Gurney
Kenneth Harless
Husein Hasan
Steven Hensley
Carl Horvath
Dennis Horwitz
Chris Huntley
Magdi Ishac
David Ittner
David W. Jackson
James H. Jones
Lars-Erick Juhlin
Innocent Kamwa
Leon Kempner Jr.
Gael R. Kennedy
Kamran Khan
Alan King
Hermann Koch
Robert Konnik
Antonio Lim
Jason Lin
Gene Lindholm
Lisardo Lourido
Gregory Luri
Otto Lynch
Joseph Ma
Al Maguire
Keith Malmedal
Donald Marihart
Jesus Martinez
Frank Mayle
Ken McClenahan
Nigel McQuin
John Merando
Gary Michel
Philip Mo
Gary L. Nissen
Jeffrey Nelson
Michael Newman
Joe Nims
Robert Nowell
T. W. Olsen
Miklos Orosz
Bob Oswald
Klaus Papp
James Parello
Neal Parker
Bansi Patel
Paul Pillitteri
John Randolph
Craig Riker
Timothy Robirds
Dinesh Sankarakurup
Douglas Seely
H. Jin Sim
Chuck Simmons
Pritpal Singh
Tarkeshwar Singh
Dave Singleton
H. Melvin Smith
Richard Starck
Bob Stewart
Charles Todd
Norbert Trapp
Joe Watson
Kenneth White
Alan Wilks
James Wilson
Richard York
Roland Youngberg
Xi Zhu

Copyright The Institute of Electrical and Electronics Engineers, Inc.
Provided by IHS under license with IEEE
No reproduction or networking permitted without license from IHS

Copyright © 2006 IEEE. All rights reserved.

Not for Resale

When the IEEE-SA Standards Board approved this recommended practice on 8 November 2005, it had the following membership:

Steve M. Mills, *Chair*
Richard H. Hulett, *Vice Chair*
Don Wright, *Past Chair*
Judith Gorman, *Secretary*

Mark D. Bowman
Dennis B. Brophy
Joseph Bruder
Richard Cox
Bob Davis
Julian Forster*
Joanna N. Guenin
Mark S. Halpin
Raymond Hapeman
William B. Hopf
Lowell G. Johnson
Herman Koch
Joseph L. Koepfinger*
David J. Law
Daleep C. Mohla
Paul Nikolich
T. W. Olsen
Glenn Parsons
Ronald C. Petersen
Gary S. Robinson
Frank Stone
Malcolm V. Thaden
Richard L. Townsend
Joe D. Watson
Howard L. Wolfman

*Member Emeritus

Also included are the following nonvoting IEEE-SA Standards Board liaisons:

Satish K. Aggarwal, *NRC Representative*
Richard DeBlasio, *DOE Representative*
Alan H. Cookson, *NIST Representative*

Don Messina
IEEE Standards Project Editor

Copyright The Institute of Electrical and Electronics Engineers, Inc.
Provided by IHS under license with IEEE
No reproduction or networking permitted without license from IHS
Copyright © 2006 IEEE. All rights reserved.
Not for Resale

Contents

1. Overview 1

1.1 General 1
1.2 Scope 1
1.3 Purpose 1
1.4 How to use this recommended practice 2
1.5 Acceptance of previously qualified electrical equipment 3
1.6 Earthquakes and substations 4
1.7 Design and construction 4
1.8 The equipment at risk 5
1.9 Mechanical loads 5

2. Normative references 5

3. Definitions, acronyms, and abbreviations 7

3.1 Definitions 7
3.2 Abbreviations and acronyms 10

4. Instructions 11

4.1 General 11
4.2 Specifying this recommended practice in user's specifications 11
4.3 Standardization of criteria 12
4.4 Selection of qualification level 12
4.5 Witnessing of shake-table testing 13
4.6 Optional qualification methods 13
4.7 Qualifying equipment by group 14
4.8 Inherently acceptable equipment 15
4.9 Shake-table facilities 15
4.10 Equipment too large to be tested in its in-service configuration 16
4.11 Report templates 16

5. Installation considerations 16

5.1 General 16
5.2 Equipment assembly 17
5.3 Site response characteristics 17
5.4 Soil-structure interaction 17
5.5 Support structures 17
5.6 Base isolation 19
5.7 Suspended equipment 19
5.8 Anchorage 22
5.9 Conductor induced loading 23
5.10 Short-circuit loads 28
5.11 Wind and ice loads 29

Copyright © 2006 IEEE. All rights reserved.

Copyright The Institute of Electrical and Electronics Engineers, Inc.
Provided by IHS under license with IEEE
No reproduction or networking permitted without license from IHS
Not for Resale

6. Qualification methods: an overview 29

6.1 General 29
6.2 Analysis methods 30
6.3 Testing methods 30
6.4 Special test cases 31
6.5 Qualification method for specific equipment 32
6.6 Functionality of equipment 32
6.7 Qualification by seismic experience data 32
6.8 Response spectra 33
6.9 Damping 34

7. Design considerations 34

7.1 Structural supports, excluding foundations 34
7.2 Foundation analysis 34
7.3 Station service 35
7.4 Emergency power systems 36
7.5 Telecommunication equipment 38

8. Seismic performance criteria for electrical substation equipment 38

8.1 Introduction 38
8.2 Objective 38
8.3 Seismic qualification levels 39
8.4 Projected performance 40
8.5 Seismic qualification 42
8.6 Selecting the seismic level for seismic qualification 42

Annex A (normative) Standard clauses 47

Annex B (normative) Equipment, general 74

Annex C (normative) Circuit breakers 77

Annex D (normative) Transformers and liquid-filled reactors 82

Annex E (normative) Disconnect and grounding switches 89

Annex F (normative) Instrument transformers 93

Annex G (normative) Air core reactors 97

Annex H (normative) Circuit switches 100

Annex I (normative) Suspended equipment 104

Copyright © 2006 IEEE. All rights reserved.

Copyright The Institute of Electrical and Electronics Engineers, Inc.
Provided by IHS under license with IEEE
No reproduction or networking permitted without license from IHS
Not for Resale

Annex J (normative) Station batteries and battery racks 109

Annex K (normative) Surge arresters 113

Annex L (normative) Substation electronic devices, distribution panels and switchboards, and solid-state rectifiers 117

Annex M (normative) Metalclad switchgear 120

Annex N (normative) Cable terminators (potheads) 123

Annex O (normative) Capacitors, series, and shunt compensation 126

Annex P (normative) Gas-insulated switchgear 128

Annex Q (normative) Experience-based qualification procedures for low-voltage substation equipment 133

Annex R (informative) Composite and porcelain insulators 135

Annex S (normative) Analysis report template 148

Annex T (normative) Test report template 155

Annex U (informative) Specifications 165

Annex V (informative) Bibliography 166

--`,,```,,,,````-`-`,,`,,`,`,,`---
Copyright © 2006 IEEE. All rights reserved.

Copyright The Institute of Electrical and Electronics Engineers, Inc.
Provided by IHS under license with IEEE
No reproduction or networking permitted without license from IHS
Not for Resale

IEEE Recommended Practice for Seismic Design of Substations

1. Overview

1.1 General

This recommended practice provides minimum requirements for the seismic design of substations, excluding Class 1E equipment for nuclear power generation stations. Seismic qualification of electrical equipment and its support is emphasized.

1.2 Scope

The recommended practice contains recommendations for the seismic design of substation buildings, structures, and equipment.

1.3 Purpose

This recommended practice is for new substations and planned additions or improvements to existing substations. It is not intended that existing substations must be retrofitted to these recommended practices.

For instruction on how to include this recommended practice in specifications, refer to 5.2.

IEEE Std 693 is designed as an integrated set of requirements for the seismic qualification of electrical power equipment. Users should use IEEE Std 693 as a whole. Do not modify or remove any requirement, except as allowed herein.

If any part of this recommended practice is removed, not met, or reduced, then neither the user nor the manufacturer may claim the equipment is in compliance with IEEE Std 693 and should not attach the seismic identification plate to the equipment. The user is strongly urged not to modify any of the requirements herein, including increasing or adding to the requirements.

The most important goal of this recommended practice is to provide a single standard set of design recommendations for seismic qualification of each equipment type. Design recommendations consist of seismic criteria, qualification methods and levels, structural capacities, performance requirements for equipment operation, installation methods, and documentation. The intent of a uniform and consistent seismic qualification procedure is to reduce the cost for qualification of substation equipment, because the

Copyright © 2006 IEEE. All rights reserved.

Copyright The Institute of Electrical and Electronics Engineers, Inc.
Provided by IHS under license with IEEE
No reproduction or networking permitted without license from IHS
Not for Resale

manufacturers can qualify their equipment once for each qualification level and eliminate specialized testing. It should also improve earthquake performance by establishing clear performance criteria that take into account the dynamic characteristics of substation equipment.

Three qualification levels are defined. They are low, moderate, and high. The user should determine the desired qualification level when purchasing the equipment. See Clause 8.

This recommended practice is divided into 8 Clauses (Clause 1 through Clause 8) and 22 Annexes (Annex A through Annex V). Clauses contain general seismic design requirements. Annex C through Annex P contain equipment-specific seismic design requirements and are located after the clauses. If the type of equipment to be qualified is not specifically addressed in Annex C through Annex P, the seismic design requirements of Annex B may be used, if applicable.

Annexes are titled normative or informative. Normative annexes are official parts of this recommended practice. Informative annexes include information only and are not an official part of this recommended practice.

The following references are recommended for seismic design of substation structures, foundations, and anchorage[1]:

— *Buildings:* International Building Code (IBC), Mexican Code (MDOC/CFE), Uniform Building Code (UBC), or National Building Code of Canada (NBCC).

— *Anchorage design:* American Society of Civil Engineers (ASCE) Substation Structure Design Guide.

NOTE—Anchorage design requirements are found in the ASCE Substation Structure Design Guide. Anchorage requirements for equipment qualification are provided in this recommended practice.[2]

— *Foundation Design:* International Building Code (IBC), Uniform Building Code (UBC), Mexican Code MDOC/CFE, NBCC, or Canadian Foundation Engineering Manual [B6].[3]

— *Structures:* Strain Bus Structures, A-Frames, racks, box structures, rigid bus supports, and all other such substation structures. ASCE Substation Structure Design Guide.

The ASCE “Guide to Improved Earthquake Performance of Electric Power Systems,” ASCE Manual 96, is a guide that illustrates many methods of installing substation equipment and discusses their advantages. This guide will provide useful information for evaluating existing installation details for good earthquake performance.

The ASCE “Guide to Reliable Emergency Power for Lifelines and Critical Applications,” ASCE Manual, is a guide that discusses methods of selecting, installing, maintaining, and testing emergency power systems. It illustrates many methods of installation of emergency power equipment and discusses their advantages. This guide provides useful information for evaluating existing installation details for good earthquake performance.

1.4 How to use this recommended practice

Follow the flow chart Figure 1, and read the clauses and annexes noted.

[1] Information on references can be found in Clause 2.
[2] Notes in text, tables, and figures are given for information only and do not contain requirements needed to implement the recommended practice.
[3] The numbers in brackets correspond to those of the bibliography in Annex V.

Copyright © 2006 IEEE. All rights reserved.

Copyright The Institute of Electrical and Electronics Engineers, Inc.
Provided by IHS under license with IEEE
No reproduction or networking permitted without license from IHS
Not for Resale

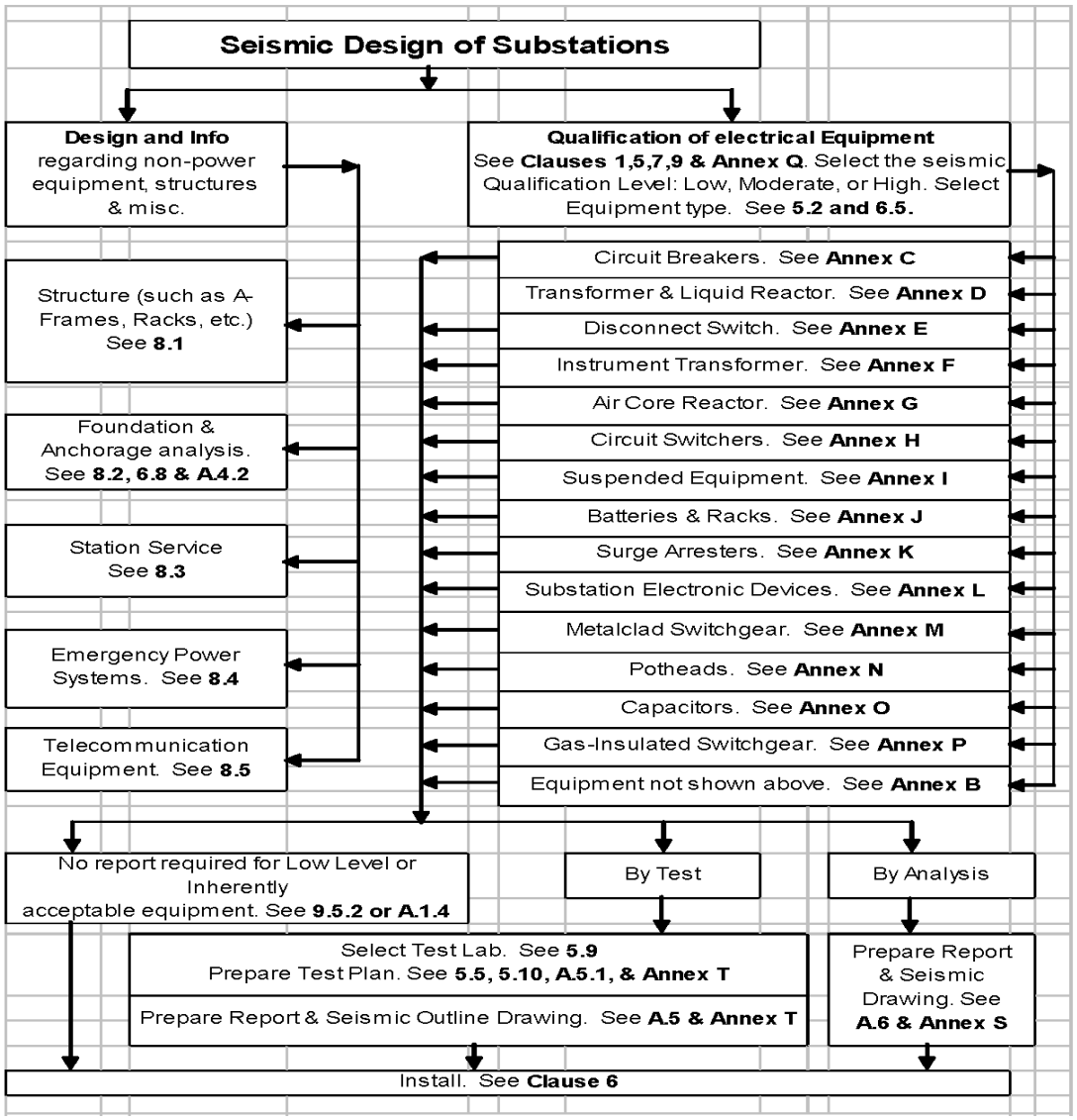

Figure 1—Using this recommended practice

1.5 Acceptance of previously qualified electrical equipment

Existing qualifications, including qualifications in conformance with other standards, may be acceptable and need not be repeated, provided the specialist who signs the report and the user agree in writing that the existing qualification adequately meets or exceeds the requirements of this recommended practice. However, the existing qualification report shall be augmented with a detailed explanation of the adequacy of the equipment to meet the requirements of this recommended practice. Changes to the report will be identified.

"Adequately" means that if the qualification was repeated using the requirements of this current recommended practice, in the opinion of the user and the specialist and based on the data in the existing qualification report, the equipment would meet or exceed the acceptance criteria of this current recommended practice.

Copyright © 2006 IEEE. All rights reserved.

Copyright The Institute of Electrical and Electronics Engineers, Inc.
Provided by IHS under license with IEEE
No reproduction or networking permitted without license from IHS
Not for Resale

Part of an existing qualification may be acceptable and need not be repeated provided the requirements stated here are met.

1.5.1 Acceptance of previous versions of IEEE Std 693

Equipment qualified to IEEE Std 693-1997 or later versions will be deemed to be in conformance with the current version of IEEE Std 693, and the qualification need not be repeated, unless a previous qualification test or analysis method is explicitly excluded by the current version. The qualification will be acceptable once the explicitly excluded part is done according to the current recommended practice and found acceptable according to A.5 or A.6. Additional documentation will be required if the current version requires additional documentation.

For a manufacturer to use a qualification from a previous edition of this recommended practice to qualify the equipment to the current version of this recommended practice, a supplemental report must be appended to the old qualification report explaining how sections excluded in the new version of the recommended practice will meet the adequacy criteria given in 1.5. The identification tag for the equipment supplied to that user can state that the equipment has been qualified to the current IEEE Std 693.

1.6 Earthquakes and substations

Earthquakes are caused by the sudden rupture of a geologic fault. Shock waves radiate from the fault fracture zone and arrive at the earth's surface as a complex multifrequency vibratory ground motion, having both horizontal and vertical components.

The response of buildings and structures to earthquake ground motion depends on factors, including their configuration, strength of construction, ductility, and their dynamic properties. Lightly damped structures having one or more natural modes of oscillation within the frequency band of ground excitation can experience considerable amplification of the forces, component stresses, and deflections.

Mechanisms that absorb energy in a structure, in response to its deformation, provide damping.

If two or more structures or equipment are linked together, such as through a conductor, they may interact with one another producing a modified response and interaction loads. Even when the link is sufficiently flexible to accommodate the relative displacement, forces may be transferred between the structures or equipment including dynamic effects. Therefore, particular care should be given to that design aspect so that the level of forces is minimized. However, provisions should also be taken in equipment design to take such forces into account. (See 5.9 and IEEE Std 1527-2006 [B23].) In particular, many items of substation equipment, for electrical reasons, are highly interconnected and often contain brittle, relatively low strength (compared with, e.g., steels), and/or low damping materials (e.g., porcelain). The conductors are often installed with very small slack. In these cases, after only a little relative motion occurs, damaging nonlinear interaction, including impacting between connected equipment will begin. Thus, items of substation equipment whose natural frequencies lie in the normal frequency range of earthquake ground motion are particularly vulnerable to damage by seismic events.

1.7 Design and construction

It is recognized that a substation may not always be designed and constructed solely by a utility using its in-house expertise. A substation may be designed as a "turnkey contract." In between these two extremes lie many hybrid possibilities, including the involvement of consultants or architect-engineers as third parties.

After the substation is complete, the user should have procedures that ensure that the installed configuration and any subsequent modification or expansion of the substation is subject to proper review to verify that the intentions of this recommended practice are preserved.

Copyright © 2006 IEEE. All rights reserved.

Copyright The Institute of Electrical and Electronics Engineers, Inc.
Provided by IHS under license with IEEE
No reproduction or networking permitted without license from IHS
Not for Resale

1.8 The equipment at risk

The satisfactory operation of a substation during and after an earthquake depends on the survival, without malfunction, of many diverse types of equipment. Not only must individual equipment be properly engineered, but also their anchorage, services, and interconnections must be well designed. For critical areas, it may be prudent to have back-up facilities and protected spares in the event of failure due to earthquake-causing ground motion.

1.9 Mechanical loads

Seismic loads (horizontal and vertical, acting simultaneously) are superimposed on other preexisting loads or other loads that may occur due to the earthquake.

Preexisting loads and loads other than seismic loads include the following:

a) Dead weight (gravitational load)

b) Assembly loads, either deliberate (i.e., by design) or accidental (arising from manufacturing tolerances and assembly misalignment)

c) Line pull (and other interconnections)

d) Wind, snow, and ice loads

e) Internal pressure (or vacuum)

f) Thermal affects (stresses due to thermal expansion, plus influence on strength properties of materials over the full temperature range from minimum ambient to maximum ambient plus temperature rise due to load heating effects)

g) Electromagnetic forces due to normal current and short-circuit current

h) Operating mechanism forces and reactions to open and closed contacts

Of course, it is not reasonable to expect all of these loads to occur simultaneously.

2. Normative references

The following referenced documents are indispensable for the application of this document. For dated references, only the edition cited applies. For undated references, the latest edition of the referenced document (including any amendments or corrigenda) applies.

ADM 1-516166, Aluminum Association, Aluminum Design Manual, Specification and Guidelines for Aluminum Structures, 2000 Edition.[4]

AISC Manual of Steel Construction, Load Resistance Factor Design (LRFD) Third Edition, 2003.[5]

AISC M016-1989, Manual of Steel Construction, ASD - 9th Edition, Including updates, which exclude the 1/3 increase of allowable stresses.

ANSI C37.06-2000, Switchgear—AC High-Voltage Circuit Breakers Rated on a Symmetrical Current Basis —Preferred Ratings and Related Required Capabilities.[6]

[4] ADM publications are available from the Aluminum Association, 1525 Wilson Boulevard, Suite 600, Arlington, VA 22209, USA (http://www.aluminum.org).
[5] AISC publications are available from the American Institute of Steel Construction, One East Wacker Drive, Chicago, IL 600601-2001, USA (http://www.aisc.org).
[6] ANSI publications are available from the Sales Department, American National Standards Institute, 11 West 42nd Street, 13th Floor, New York, NY 10036, USA.

Copyright © 2006 IEEE. All rights reserved.

Copyright The Institute of Electrical and Electronics Engineers, Inc.
Provided by IHS under license with IEEE
No reproduction or networking permitted without license from IHS
Not for Resale

ANSI C37.32-2002, High-Voltage Switches, Bus Supports, and Accessories—Schedules of Preferred Ratings, Construction Guidelines, and Specifications.

ANSI C93.1-1999, Power-Line Carrier Coupling Capacitor and Coupling Capacitor Voltage Transformers (CCVT)—Requirements.

ASCE, Substation Structure Design Guide.[7]

ASTM A36/A36M-04, Standard Specification for Carbon Structural Steel.[8]

ASTM A307-04, Standard Specification for Carbon Steel Bolts and Studs, 60,000 psi Tensile Strength.

ASTM F1554-04 Standard Specification for Anchor Bolts, Steel, 36, 55, and 105-ksi Yield Strength.

IBC-2003, International Building Code.[9]

IEEE Std 48™-1996 (Reaff 2003), IEEE Standard Test Procedures and Requirements for Alternating-Current Cable Terminations 2.5 kV through 765 kV.[10, 11]

IEEE Std 518™ -1982 (Reaff 1996) (Withdrawn), IEEE Guide for the Installation of Electrical Equipment to Minimize Electrical Noise Inputs to Controllers from External Sources.

IEEE Std 824™ -1994, IEEE Standard for Series Capacitors in Power Systems.

IEEE Std 1036™ -1992, IEEE Guide for Application of Shunt Power Capacitors.

IEEE Std C37.09™ -1999, IEEE Standard Test Procedure for AC High-Voltage Circuit Breakers Rated on a Symmetrical Current Basis.

IEEE Std C37.20.2™ -1999, IEEE Standard for Metal-Clad Switchgear.

IEEE Std C37.90.1™ -2002, IEEE Standard Surge Withstand Capability (SWC) Tests for Protective Relays and Relay Systems Associated With Electric Power Apparatus.

IEEE Std C37.90.2™ -2004, IEEE Standard for Withstand Capability of Relay Systems to Radiated Electromagnetic Interference from Transceivers.

IEEE Std C37.122™ -1993, IEEE Standard for Gas-Insulated Substations.

IEEE C57.12.00™ -2000, IEEE Standard General Requirements for Liquid-Immersed Distribution, Power, and Regulating Transformers.

IEEE Std C57.13™ -1993, IEEE Standard Requirements for Instrument Transformers.

IEEE Std C57.16™ -1996, IEEE Standard Requirements, Terminology, and Test Code for Dry-Type Air-Core Series-Connected Reactors.

[7]ASCE publications are available from the American Society of Civil Engineers, 1801 Alexander Bell Drive, Reston, VA 20191-4400.
[8]ASTM publications are available from the American Society for Testing and Materials, 100 Barr Harbor Drive, West Conshocken, PA 19428-2959, USA.
[9]IBC publications are available from International Code Council, 900 Montclair Road, Birmingham, AL 35213-1206, USA.
[10] IEEE publications are available from the Institute of Electrical and Electronics Engineers, Inc., 445 Hoes Lane, Piscataway, NJ 08854, USA (http://standards.ieee.org/).
[11] The IEEE standards or products referred to in this clause are trademarks of the Institute of Electrical and Electronics Engineers, Inc.

Copyright © 2006 IEEE. All rights reserved.

Copyright The Institute of Electrical and Electronics Engineers, Inc.
Provided by IHS under license with IEEE
No reproduction or networking permitted without license from IHS
Not for Resale

IEEE Std C57.19.00™ -2004, IEEE Standard General Requirements and Test Procedure for Outdoor Power Apparatus Bushings.

IEEE Std C57.21™ -1990 (Reaff 1995), IEEE Standard Requirements, Terminology, and Test Code for Shunt Reactors Over 500 kVA.

IEEE Std C62.11™ -1999, IEEE Standard for Metal-Oxide Surge Arresters for Alternating Current Power Circuits.

MDOC/CFE Manual de Diseño de Obras Civiles, de la Comisión Federal de Electricidad, Instituto de Investigaciones Eléctricas, México, 1993.[12]

National Building Code of Canada (NBCC), Eleventh Edition, 1995.[13]

NEHRP-2000 (National Earthquake Hazards Reduction Program), Recommended Provisions for Seismic Regulations for New Buildings [Federal Emergency Management Agency (FEMA), 2000].[14]

PSM Peligro Sísmico en México, II-UNAM, CENAPRED, CFE, IIE, México, 1996.[15]

Uniform Building Code, 1997.[16]

Wilson, E. L., Der Kiureghian, A., and Bayo, E. R., "A replacement for the SRSS method in seismic analysis," *Earthquake Engineering and Structural Dynamics*, vol. 9, pp. 187–192, 1981.[17]

3. Definitions, acronyms, and abbreviations

3.1 Definitions

For the purposes of this document, the following terms and definitions apply. *The Authoritative Dictionary of IEEE Standards Terms* [B16] should be referenced for terms not defined in this clause.

3.1.1 **Arias Intensity:** A ground motion parameter that is a measure of the total energy associated with a ground motion record. The Arias Intensity is proportional to the integral over time of the acceleration squared (m/s), and thus, it considers the full range of frequencies recorded over the duration of the given record.

Arias Intensity $A(t) = (\pi / 2g)\int_0^t a^2(\tau)d\tau$

Normalized Arias Intensity $I(t) = A(t) / A(\infty)$

where $a(\tau)$ is the acceleration time history function.

[12]MDOC/CFE publications are available from the Civil Engineering Department, P.O. Box 1-475, 62001, Cuernavaca, Mor, Mexico.
[13]The National Building Code of Canada is available from the National Research Council of Canada, Institute for Research in Construction, Ottawa, Canada.
[14]The NEHRP publication is available from the Building Seismic Safety Council, 1201 L St., N.W., Suite 400, Washington, D.C. 20005, USA.
[15]PSM publications are available from the Instituto De Ingenieria, CD Universtaria, Coyoacan, 04510, Mexico, D.S.
[16]UBC publications are available from International Code Council, 4051 W. Flossmoor Rd, Country Club Hills, IL 60478-5795, USA.
[17] The *Earthquake Engineering and Structural Dynamics* publication available online from John Wiley and Sons, Inc. at http://cajun.cs.nott.ac.uk/engineering/civeng.html.

Copyright © 2006 IEEE. All rights reserved.

Copyright The Institute of Electrical and Electronics Engineers, Inc.
Provided by IHS under license with IEEE
No reproduction or networking permitted without license from IHS
Not for Resale

3.1.2 basketing of conductors (bird caging): The unraveling or untwisting of outer and inner strands. Basketing can be caused by the following:

— Minimum bending radius being violated.

— Ends being twisted opposite to direction of twist.

3.1.3 biaxial testing: Testing simultaneously in two directions, i.e., one horizontal and one vertical direction.

3.1.4 brittle material components: A material that experiences limited or no plastic deformation before fracture. Limited deformation shall be taken as less than 10% in 5 cm (2 in) at failure in tension.

3.1.5 complete quadratic combination (CCC method): A modal combination method, especially useful for systems with closely spaced frequencies.

NOTE—See 5.9.3.

3.1.6 composite: Materials that refer to polymer impregnated fiber components used as insulators or bushings.

3.1.7 ductile material: Material that experiences considerable plastic deformation before fracture.

NOTE—See 3.1.4.

3.1.8 dynamically equivalent or better structure(s): A functionally similar structure that transmits seismic motions, such as translation and rotation, at the equipment interface equal to (equivalent) or less (better) than a structure to which a comparison is being made. Accelerations should include all possible axes of freedom.

3.1.9 first support: The primary aboveground support of a piece of equipment. For stand-alone equipment, the first support is the entire structure, such as a CVT pedestal or the entire frame for a disconnect switch. For racks or A-frames that support other equipment or carry pull-off loads, the first support is the member(s) upon which the equipment is attached and its connections.

NOTE—The rest of the structure is designed according to the ASCE Substation Structure Design Guide.[18]

3.1.10 flexible equipment: Equipment, structures, and components whose lowest resonant frequency is less than the cutoff frequency, 33 Hz, on the response spectrum.

3.1.11 fragility testing: Vibration testing of substation equipment to the minimum level of shaking at which the equipment will no longer operate as intended.

3.1.12 *g*: Acceleration due to gravity that is 9.81 m/s^2 (32.2 ft/s^2).

3.1.13 ground acceleration: The acceleration of the ground resulting from the motion of a given earthquake. The maximum or peak ground acceleration is the zero period acceleration (ZPA) of the ground response spectrum.

3.1.14 load path: The route the loads follow through the equipment and support. It describes the transfer of loads generated by, or transmitted through, the equipment from the point of origin of the load to the anchorage.

[18] Information on references can be found in Clause 2.

Copyright © 2006 IEEE. All rights reserved.

--`,,```,,,,````-`-`,,`,,`,`,,`---

Copyright The Institute of Electrical and Electronics Engineers, Inc.
Provided by IHS under license with IEEE
No reproduction or networking permitted without license from IHS
Not for Resale

3.1.15 maximum mechanical load (MML): The largest service load allowed on a composite insulator or bushing. The MML is within the reversible elastic range and is supplied by the manufacturer.

NOTE—It is defined in IEC TC 36 WG07 Project 1462 Ed 1 (draft). See R.1.2.4.

3.1.16 normal operating load: Any force, stress, or load resulting from equipment operation that can reasonably be expected to occur during an earthquake, except short-circuit loads.

3.1.17 oil leakage load: The cantilever load applied to the top of any oil-filled component at which oil leakage begins.

3.1.18 projected performance: The estimated performance based on the value of critical variables (strain, stress, and deflection) determined from shake-table tests or analyses at the required response spectrum using acceptance criteria that assure the critical variables are equal to or less than their acceptance allowables.

NOTE—See A.2.

3.1.19 resonant frequency: A frequency at which a response peak occurs in a system subjected to sinusoidal forced vibration. This frequency is accompanied by a 90º phase shift of response relative to the excitation.

3.1.20 response spectrum: A plot of the maximum response of an array of single-degree-of-freedom (SDOF) identically damped oscillators with different frequencies, all subjected to the same base excitation.

3.1.21 rigid equipment: Equipment, structures, and components whose lowest resonant frequency is greater than the cutoff frequency, 33 Hz, on the response spectrum.

3.1.22 seismic outline drawing: A 280 mm × 432 mm (11 in × 17 in), A3, 216 mm × 280 mm (8½ in × 11 in), or A4 drawing that shows key information concerning the seismic qualification of the equipment. It shows information such as the resonant frequencies of the equipment, important loads, an outline drawing of the equipment, the center of gravity of the equipment, and other key information about the equipment.

NOTE—See A.5.3 and A.6.2.

3.1.23 specified mechanical load (SML): The bending moment load of a composite, which is ≥2.5 times the maximum mechanical load. After application of the SML load, the residual strain may be ±5% of the maximum strain (irreversible plastic phase), but no visible damage may occur. The SML is a load rating used for composite insulators. [adapted from IEC TC 36 WG07 Project 1462 Ed 1 (draft)]

NOTE—In the context of this recommended practice, the term will be used in reference to bending loads, but users should be aware that the terminology is also applicable to other loading directions. See R.1.2.4.

3.1.24 triaxial: Testing or analysis in two horizontal orthogonal directions and the vertical direction simultaneously.

3.1.25 zero period acceleration (ZPA): The acceleration level of the high-frequency, non-amplified portion of the response spectrum (e.g., above the cutoff frequency, 33 Hz). This acceleration corresponds to the maximum (peak) acceleration of the time history used to derive the spectrum.

NOTE—For use in this recommended practice, the ZPA is assumed to be the acceleration response at 33 Hz or greater.

Copyright © 2006 IEEE. All rights reserved.

Copyright The Institute of Electrical and Electronics Engineers, Inc.
Provided by IHS under license with IEEE
No reproduction or networking permitted without license from IHS
Not for Resale

3.2 Abbreviations and acronyms

ACI	American Concrete Institute
ADM	Aluminum Design Manual
AISC	American Institute of Steel Construction
ASCE	American Society of Civil Engineers
ASD	allowable stress design
AWS	American Welding Society
BIL	basic impulse insulation level
CG	center of gravity
CQC	complete quadratic combination
CT	current transformer
CVT	capacitor voltage transformer
D	dead load
DFR	digital fault recorders
E	earthquake loads or seismic loads
EPDM	ethylene propylene diene copolymer
EPM	ethylene propylene copolymer
FRP	fiberglass reinforced polymer
GIS	gas insulated switchgear
IED	intelligent electronic devices
IBC	International Building Code
IT	instrument transformer
LTR	laboratory test report
LRFD	load resistance factor design
MDOC/CFE	Manual de Diseño de Obras Civiles de la Comisión Federal de Electricidad
MML	maximum mechanical load
NBCC	National Building Code of Canada
NEHRP	National Earthquake Hazards Reduction Program
PGA	peak ground acceleration
PSD	power spectral density (g^2/Hz vs. frequency)
RRS	required response spectrum
RTU	remote terminal unit
SDOF	single degree of freedom
SED	substation electronic devices
SER	sequence of events recorders
SML	specified mechanical load
SR	silicone rubber
SRSS	square root of the sum of the squares
SSI	soil-structure interaction
TRS	test response spectrum
UBC	Uniform Building Code
VT	voltage transformer
W	wind loads
ZPA	zero period acceleration

Copyright © 2006 IEEE. All rights reserved.

Copyright The Institute of Electrical and Electronics Engineers, Inc.
Provided by IHS under license with IEEE
No reproduction or networking permitted without license from IHS
Not for Resale

4. Instructions

4.1 General

This recommended practice provides qualification requirements for substation equipment and supports manufactured from steel, aluminum, porcelain, and composites. Should other material, such as timber, structural plastics, concrete, or glass, be specified, the user or the user's agent should provide the acceptance criteria. Any acceptance criteria proposed by the manufacturer shall first be accepted by the user or user's agent, before it can be used by the manufacturer in the qualification.

4.2 Specifying this recommended practice in user's specifications

For equipment to be qualified to this recommended practice, this recommended practice must be used in its entirety. The user or user's agent must not add additional requirements to their specifications, nor remove requirements given herein from their specifications. Nor should the user or user's agent attempt to cut-and-paste sections from this recommended practice to create a specification.

The user or the user's agent should supply the following information in their equipment specifications to the manufacturer:

a) The type of equipment shall be stated, and the name must match one of the types of equipment described in Annex C through Annex P, such as circuit breaker, disconnect switch, suspended wave trap, and so on, or Annex B must be referenced.

NOTE—The electrical section of the user's specifications should define the detailed electrical requirements, including voltage, BIL, creep lengths, and so on.

b) A statement that the equipment shall be qualified according to the requirements of this recommended practice.

c) The seismic qualification level required (i.e. high, moderate, or low). To determine the qualification level, refer to 8.6.

d) Equipment's in-service configuration. The user or user's agent should

   1) Specify that the equipment be supplied with or without a support.

   2) If without a support, the requirements of 5.5 shall be followed.

e) The user or user's agent should provide any necessary information, such as allowables or acceptable codes for wood, plastics, or other material not provided for in this recommended practice.

f) The user should include a schedule of due dates for completion of the test plan, testing (if needed), and the report.

The templates given in Annex U may be used in preparing seismic qualification specifications for Annex B through Annex P.

The specification templates are given in English. It may be translated into other languages.

Copyright © 2006 IEEE. All rights reserved.

Copyright The Institute of Electrical and Electronics Engineers, Inc.
Provided by IHS under license with IEEE
No reproduction or networking permitted without license from IHS
Not for Resale

For example, filling in the template in Annex U, the user's specifications for Annex C through Annex P may read as follows:

> The surge arresters and support structure shall be qualified according to the requirements of IEEE Std 693-2005. The surge arresters and support shall meet the requirements of the high seismic qualification level. (Structure height and information discussed in item d) of 4.2 must be included if the support structure is required.) The test plan shall be submitted within 35 calendar days of award of contract, and the test shall be completed within 75 calendar days of award of contract. The report shall be submitted within 21 calendar days after testing is complete.

For example, filling in the template in Annex U, the user's specifications for Annex B may read as follows:

> The voltage divider and support shall be qualified according to the requirements of IEEE Std 693-2005. The voltage divider and support shall meet the requirements of the moderate seismic qualification level and shall be qualified according to Annex B. Qualification shall be by time history testing. No functional tests are required. The test plan shall be submitted within 35 calendar days of award of contract, and the test shall be completed within 75 calendar days of award of contract. The report shall be submitted within 21 calendar days after testing is complete.

Note that additional information is required, because this latter example is for Annex B.

Structure height and information discussed in item d) of 4.2 must be included if a support structure is required. The test plan schedule requirements should be omitted from the Annex B template, if the qualification is by analysis.

4.3 Standardization of criteria

The user should not include additional or different seismic requirements in their specifications for equipment. This recommendation provides for a uniform and consistent seismic qualification procedure and allows multiple users to take advantage of pre-qualified equipment with the goal of distributing the cost among the users. This also allows the manufacturer to design the equipment to a standard set of requirements.

4.4 Selection of qualification level

This recommended practice provides three levels of qualification that should encompass the needs of most users. Experience has shown that it is good practice to specify the same criteria for all like equipment in all substations within a reasonably large geographical area, even if some of the substations within the area have moderately higher or slightly lower expected levels of ground shaking. There are several reasons for this. The most important reason is interchangeability. Should equipment malfunction or in the event of an earthquake, be lost and need to be replaced quickly, equipment from other substations can be moved and installed in the substation that experienced the loss. Also, keeping the same criteria for all like equipment will simply make it easier to keep track of equipment and its qualification level.

Following this practice makes economical sense. There are savings to be had by specifying fewer levels for the same equipment. The manufacturer only needs to design and manufacture fewer modifications of the same equipment. Also, the equipment supplied to slightly different areas is generally the same equipment with possible minor modifications.

Copyright © 2006 IEEE. All rights reserved.

Copyright The Institute of Electrical and Electronics Engineers, Inc.
Provided by IHS under license with IEEE
No reproduction or networking permitted without license from IHS
Not for Resale

4.5 Witnessing of shake-table testing

Potential users should witness the shake-table testing. If the equipment is being qualified for a specific purchaser, it is suggested that additional potential users also be invited, with the approval of the purchaser.

The names of the witnesses should be included in the report, with the approval of the witnesses.

4.6 Optional qualification methods

4.6.1 General

The manufacturer may replace an annex-specified qualification method with an optional qualification method listed in 4.6.2 through 4.6.7. The intent of the optional qualification methods is to return either a more conservative or a more precise determination of the seismic loads than the original required technique. Qualification techniques with recognized options are limited to those listed in 4.6.2 through 4.6.7.

It should be noted that these are manufacturers' options only. The user is not to exercise these options.

4.6.2 Option to static analysis

When static analysis is specified, the manufacturer has the option of substituting dynamic analysis, time history testing, or sine beat testing according to the requirements of A.1 and the acceptance requirements of A.2 as appropriate, provided all other requirements are met.

4.6.3 Option to dynamic analysis (static coefficient analysis)

When dynamic analysis is specified, the manufacturer has the option of substituting the static coefficient analysis method as defined in A.1.3.2, provided a static coefficient of 1.5 is used and all other requirements are met. This method allows a simpler technique in return for added conservatism. Under this alternative method, a determination of natural frequencies and damping is not required. Where natural frequencies are normally shown or provided in the report and seismic outline drawing, the note "Optional analysis" should be shown.

4.6.4 Option to dynamic analysis (testing)

When dynamic analysis is specified, the manufacturer has the option of substituting the time history test or sine beat test and its associated acceptance criteria in lieu of the analytical method, provided all other requirements are met. The testing shall be done according to the requirements of A.1, and the acceptance requirements shall be according to A.2.

4.6.5 Option to static coefficient analysis

When the static coefficient analysis is specified, the manufacturer has the option of substituting dynamic analysis, time history, or sine-beat testing as an alternative method of analysis, provided all other requirements are met. The qualification shall be done according to the requirements of A.1, and the acceptance requirements shall be according to A.2.

Copyright © 2006 IEEE. All rights reserved.

--`,,```,,,,````-`-`,,`,,`,`,,`---

Copyright The Institute of Electrical and Electronics Engineers, Inc.
Provided by IHS under license with IEEE
No reproduction or networking permitted without license from IHS
Not for Resale

4.6.6 Option to use a greater acceleration

The manufacturer may use an acceleration greater than that specified or a response spectrum that envelops the required response spectrum as discussed in A.1.2.2, provided all other requirements are met.

4.6.7 Option to test at the performance level

When testing is specified, the manufacturer has the option of testing at the performance level, which is twice the RRS level. For sine beats, the acceleration level is increased by a factor of 1.2; that is, for the moderate seismic level, the peak acceleration is 0.3*g*, and for the high seismic level, it is 0.6*g*. All other requirements shall be met, except as allowed in A.2.6.

When an analysis or pull test is specified, the manufacturer has the option of testing at twice the RRS level specified, provided all other requirements are met. The testing shall be done according to the requirements of A.1, and the acceptance requirements shall be according to A.2.6.

Equipment tested at twice the RRS level shall not be provided to the user, unless the user accepts in writing the tested equipment.

4.6.8 Option to pull test

When a pull test is specified, the manufacturer has the option of substituting the time history test or sine beat test and its associated acceptance criteria in lieu of the pull test, provided all other requirements are met. The testing shall be done according to the requirements of A.1, and the acceptance requirements shall be according to A.2.

4.7 Qualifying equipment by group

Equipment that differs structurally or dynamically, including different voltage class, BIL, and equipment type, shall require a separate qualification, except as allowed herein.

Often, equipment of the same type, such as bushings, surge arresters, or instrument transformers, are very similar structurally, but of varying current, voltage, BIL, and so on. Equipment such as these may be combined into groups for qualification purposes, with the most seismically vulnerable piece of equipment of each group being analyzed or tested. That qualification would then apply to all equipment in that group. It shall be demonstrated analytically or by test that the equipment in that group is structurally similar and that the most seismically vulnerable equipment was tested or analyzed. The manufacturer shall include the demonstration work in the seismic report. The user or the user's agent reserves the right to refuse the grouping, if they do not agree with the technical merit of the demonstration analysis. Should this happen, a review of the analysis should be conducted to determine if the reason for rejection can be resolved. If it cannot be resolved, grouping may not be used, and the equipment shall be qualified separately.

Note that additional equipment may be added to a grouping at any time. For example, an existing surge arrester, model number "Existg," has been qualified, and some time later, a new surge arrester, model number "New," is required. If surge arrester "New" can be shown to be less vulnerable than surge arrester "Existg"; then surge arrester "New" can be grouped with the qualification of surge arrester "Existg," provided the user or user's agent agree as discussed above.

Copyright © 2006 IEEE. All rights reserved.

Copyright The Institute of Electrical and Electronics Engineers, Inc.
Provided by IHS under license with IEEE
No reproduction or networking permitted without license from IHS
Not for Resale

A seismic outline drawing shall be provided for the most seismically vulnerable piece of equipment. A seismic outline drawing need not be provided for the other pieces of equipment in the grouping. A list of the other equipment in the grouping shall be provided in the seismic report. Note that the data provided on the seismic outline drawing are only applicable to the equipment tested or analyzed. For the other equipment in the grouping, it is the user's responsibility to adjust the data, such as deflections or base loads, if needed.

4.8 Inherently acceptable equipment

The following types of equipment are deemed inherently acceptable and can be qualified by the requirements of A.1.4:

— Electric motors

— Engine generators

4.9 Shake-table facilities

Due to the design and capacities of the incorporated actuators and servo valves, all shake-tables have limitations in displacement, velocity, and acceleration. Thus, the size and weight of equipment that can be tested is restricted.

Equipment identified in this recommended practice as requiring shake-table testing can be fully tested by most commercial tables according to the requirements of this recommended practice, with the possible exception of equipment with low resonant frequencies. Such equipment may include tall slender cantilever type equipment, such as live tank circuit breakers or current transformers, or base isolated equipment. Equipment with natural frequencies below 1 Hz may require special techniques. If it is apparent or reasonably possible that resonant frequencies exist below 1 Hz, testing below 1 Hz shall be done. The following approaches may be used: Although the broad-band signal may be reduced below 1 Hz and at the equipment fundamental natural frequency, it will generally be possible to add a low amplitude sine beat signal to the time history at the equipment fundamental frequency to raise the test response spectrum above the RRS. Note that the sine beat may have to be longer duration, but lower amplitude than the typical sine beat used in a sine beat test.

If equipment limitations at the test laboratory require deviations from this recommended practice, the deviation shall be approved by the user or user's agent. (It is suggested that the deviations be discussed with the potential user witnesses discussed in 4.5.)

All safety requirements as determined by the testing laboratory shall be followed. A safety line with sufficient slack to decouple the safety line from the equipment during testing should be attached to the equipment during testing, and appropriate precautions should be followed for testing pressurized equipment.

Minimum requirements for testing laboratories shall be as follows:

a) The table shall be biaxial with triaxial preferred.

b) The weight of the equipment shall not exceed the capacity of the table.

c) The table shall be capable of enveloping the RRS for the equipment weight at frequencies of 0.75 times the lowest resonant frequency of the equipment, and all resonant frequencies up to 33 Hz, except shake-table need not be capable of testing below 1 Hz. (Example: Lowest resonant frequency is 4 Hz. Table shall be capable of testing equipment weight at 4 Hz × 0.75 = 3 Hz and above.)

d) The test laboratory equipment shall be capable of identifying resonant frequencies from at least 1 Hz in both horizontal directions and the vertical direction.

Copyright © 2006 IEEE. All rights reserved.

Copyright The Institute of Electrical and Electronics Engineers, Inc.
Provided by IHS under license with IEEE
No reproduction or networking permitted without license from IHS
Not for Resale

e) The laboratory's control and function equipment shall be capable of performing all of the tests required by this recommended practice.

f) The test laboratory personnel shall be experienced in performing testing work.

g) The test laboratory shall be capable of producing the test data necessary to complete the test report as required by this recommended practice.

4.10 Equipment too large to be tested in its in-service configuration

Gas-insulated switchgear and other equipment too large to be mounted completely on the shake-table may be broken into sub-assemblies and tested separately, provided the parts tested produce conservative results, and the conservatism can be demonstrated by analysis or test. The test or analysis concept must be approved by utility witnesses or the user or user's agent, before it can be used. The sub-assemblies removed may be simulated by adding weights and/or support to the part tested, provided it can be demonstrated by analysis or test that the additional weight and/or support effectively replicate the missing equipment sub-assemblies. This procedure should be repeated for all sub-assemblies until all are tested. Seismically and structurally independent equipment sub-assemblies may be tested independently.

All components that can interact, such as the individual columns of one phase of a live-tank circuit breaker, should be tested or analyzed as a unit.

4.11 Report templates

The manufacturer shall use the template given in Annex S for the static coefficient method and static and dynamic analysis. Annex T shall be used for time history and sine beat testing. Annex S and Annex T provide a checklist for the manufacturer to follow to help ensure that no information or requirement is inadvertently omitted. The templates also provide the user with a standard format for the many reports the user will need to review and maintain. Annex S and Annex T are presented in metric unit format and in English unit format.

Additional sections or appendices may be added, as required. If an existing section or appendix is not required, list the section number or appendix letter and note N/A.

5. Installation considerations

5.1 General

This clause discusses the effect that the parameters of installation may have on the equipment qualification and earthquake performance. Installation parameters can have a significant effect on the way equipment will respond and perform during an earthquake. Some equipment installation parameters can affect the motion that the equipment will experience during an earthquake. This is true of both equipment that is installed and operating or spare components in storage. Installation parameters can either amplify or attenuate the equipment response to an earthquake. Important installation parameters include equipment assembly, site response characteristics, SSI, support structures, base isolation, suspended equipment, anchorage, and conductor loading from the conductor dynamic and adjacent equipment interaction.

Copyright © 2006 IEEE. All rights reserved.

--`,,```,,,,````-`-`,,`,,`,`,,`---

Copyright The Institute of Electrical and Electronics Engineers, Inc.
Provided by IHS under license with IEEE
No reproduction or networking permitted without license from IHS
Not for Resale

5.2 Equipment assembly

The proper assembly of equipment and its components in accordance with the manufacturer's guidelines (e.g., tightening bolts to required torque levels, minimizing the conductor loading on insulators, ensuring that components are properly aligned, following anchorage recommendations, etc.) is critical to achieving the intended seismic performance of the equipment. It is the responsibility of the user or user's agent to ensure that the equipment is properly installed except in the case when the manufacturer undertakes the responsibilities of erection. It is also crucial that all future field alterations be approved by an engineer familiar with the seismic design and criteria of the equipment. A statement reflecting this should be included on the manufacturer's installation drawings.

Where the difference in post-insulator length can induce assembly stresses, insulators should be shimmed to limit unnecessary assembly stresses.

5.3 Site response characteristics

Site effects are dependent on the dynamic properties of the geologic formations at and around the site and are influenced by factors including bedrock quality, soil type and depth, liquefaction potential, surface and bedrock topography (including the presence of sedimentary basins), and near-fault effects. The impact of site effects on the motion from an earthquake is usually considered in detailed hazard assessments. Site effects can result in dynamic amplification or attenuation between the bedrock and the soil immediately surrounding the foundation of the equipment of interest. Generally speaking, due to the usual frequency content of earthquakes, hard rock sites tend to have less severe motion of engineering significance than do softer sites of alluvium or saturated clays or silts. It is the responsibility of the user to ensure that site response characteristics are reflected in the RRS.

5.4 Soil-structure interaction

SSI occurs when the soil deforms due to the loading to the soil from the equipment-foundation system responding to an earthquake. The soil-foundation system may become a significant component in the dynamic properties of the equipment-foundations-soil system, which may increase or decrease the motion the equipment experiences during an earthquake. SSI occurs with certain combinations of equipment mass and size, foundation type and configuration, and soil properties. Transformers and liquid-filled reactors are especially susceptible to SSI. The rocking motion of transformers can cause increased acceleration and displacement of components high in the equipment, such as bushings and lightning arresters. SSI is generally not considered in the design of substation equipment, unless specifically requested by the user. SSI increases where there are high accelerations, heavy equipment, high centers of gravity, or soft sites.

5.5 Support structures

Support structures can have a very significant effect on the motion that the supported equipment will experience during an earthquake. The acceleration that the equipment experiences on a structure can be several times more severe than the ground acceleration. During qualification, it is generally desirable to have the equipment mounted or modeled in the identical manner as it would be in its in-service configuration. However, the following reasons are typical for not qualifying the equipment in its in-service configuration:

— *The equipment will be used on a variety of supports.* When equipment is to be used on a variety of supports, the user often cannot design the support until electrical requirements are established. Yet the equipment must be qualified or an existing qualification should be used, if possible.

Copyright © 2006 IEEE. All rights reserved.

Copyright The Institute of Electrical and Electronics Engineers, Inc.
Provided by IHS under license with IEEE
No reproduction or networking permitted without license from IHS
Not for Resale

— *Existing supports*. Adequate supports already exist that are different from those used in the equipment qualification. That is, the qualification for the equipment already exists, and the supports used in the qualification are different from those to be used by the user.

— *Support height unknown.* The exact height of the pedestals is not known at the time the equipment is purchased.

— *Better supports to be used*. The support to be used by the User is dynamically better (i.e., will transmit lower accelerations to the mounted equipment) than the support tested or analyzed.

— *Equipment height.* The height of the equipment makes it impractical to test inside a test laboratory.

When the equipment cannot be mounted for testing or modeled for analysis in the identical manner as it would be in its in-service configuration, the following methods may be used.

5.5.1 Modifying existing qualified support

When the user intends to install the equipment on supports different from those used in an existing qualification, the existing qualification will be acceptable if the support used is dynamically equivalent (Definition 3.1.8) or better than that used in the existing qualification. The user's designer shall design the support to meet all of the requirements of this recommended practice and shall demonstrate due consideration of all electrical and structural functions that were served by the original equipment support structure. The user may assign the design requirement to the manufacturer in the specification. If the user intends to install the pre-qualified equipment on a support other than that used in the existing qualification, then the user needs to inform the manufacturer of his/her intent to use a dynamically equivalent or better support.

5.5.2 Qualification on multiple supports

[If the support parameters (i.e., height, etc.) are not known, 5.5.4 must be used.]
When equipment will be mounted on a variety of pre-designed or pre-defined supports, the qualification will be acceptable if the equipment is mounted or modeled on the most seismically vulnerable configuration of the equipment/structures to be used.

It is the responsibility of the user to determine which support is deemed "most seismically vulnerable."

5.5.3 Qualification without support—support parameters known

When the equipment is tested without the support, the shake-table base acceleration shall be amplified to replicate the effects of the support, including the effects of translation, rotation, and torsional accelerations. The amplification value used in testing shall be the amplification value found multiplied by 1.1.

It is the responsibility of the user to supply the design and effects of the support to the manufacturer. The manufacturer shall include the effects of the support in the shake-table test. Or the manufacturer may fabricate a support structure and test the equipment on the actual support.

Only the user may exercise this option, except the case in which the equipment and support will not fit in the test laboratory. In this case, the manufacturer may exercise this option. Should the manufacturer exercise this option, the manufacturer shall determine the effects of the support and include the support effects in the test.

5.5.4 Qualification without support—support parameters not known

When equipment will be mounted on a support or a variety of supports and the parameters of the support(s) are not known, the qualification will be acceptable if the equipment is mounted or modeled without the support and the qualification is conducted at 2.5 times the requirements specified in this recommended

Copyright © 2006 IEEE. All rights reserved.

Copyright The Institute of Electrical and Electronics Engineers, Inc.
Provided by IHS under license with IEEE
No reproduction or networking permitted without license from IHS
Not for Resale

practice. The manufacturer shall include an amplification of 2.5 in the shake-table test or analysis. The users shall design the structures, once the parameters become known such that the supports do not amplify the loads at the base of the equipment greater than 2.25 times the base accelerations and the support(s) shall meet all requirements of this recommended practice. When adding the amplification factors, the user should consider the complexity of the support motions, which may include translation, torsion, and rotation of the equipment.

5.6 Base isolation

The support structure dynamics can figure heavily in the qualification strategy of equipment. Base isolation is an earthquake damage mitigation strategy that relies on a support structure to lessen the severity of earthquake-induced accelerations. Base isolators have been successfully used. However, relying on base isolation devices introduces the following concerns:

a) The damping or frequency characteristics of the system may change over time, due to creep or relaxation of materials, exposure to the elements, and other causes.

b) The device or attachment may, over time, require maintenance.

c) Should the device be removed for any reason, such as maintenance of the equipment, it may not be reinstalled properly.

d) Very large displacements may result, causing electrical clearance problems.

Base isolation shall not be allowed, unless the considerations and problems listed below and in A.7 are resolved.

Historically, there have been significant problems with existing base isolation designs that use conical-shaped disked springs (washers). Base isolation systems should be tested, nonlinearly if necessary, to assure they perform as intended. The design of this type of base isolating device should be very carefully considered before using for the following reasons:

— The springs (washers) have been known to change characteristics, usually due to environmental effects, such as corrosion, dust, or other material collecting between the washers. (This type of device should be sealed from the environment.)

— The springs have been known to change characteristics due to fatigue or improper tensioning.

— To remove the equipment from its stand, this type of spring assembly usually must be entirely disassembled.

— The expected response of the springs may not be achieved if improperly pretensioned.

— Base isolation systems must be capable of accommodating displacements associated with performance level excitations.

— The base isolation device shall have sufficient restoring capabilities to return the equipment to its original position after a performance level event.

5.7 Suspended equipment

Equipment that is suspended often takes on the dynamic characteristics of base-isolated equipment. As a consequence, it may not be subjected to the peak levels of the horizontal ground motion acceleration. On the other hand, just as with base-isolated equipment, it may experience significant vertical acceleration and horizontal displacements and may be subject to large loads associated with snubbing action of restraints. In the case of suspended equipment, instances of displacements over a meter have been observed during a significant earthquake. The large motions may cause significant nonlinear effects due to interaction with conductor connections with inadequate slack. The dynamics of the upper support point may also influence the response and loads on support and restraint points. (It is expected that most suspension mounting

Copyright © 2006 IEEE. All rights reserved.

Copyright The Institute of Electrical and Electronics Engineers, Inc.
Provided by IHS under license with IEEE
No reproduction or networking permitted without license from IHS
Not for Resale

structures are nonrigid in at least one direction.) These interactions can cause large connection point loads. Suspended equipment has included wave traps, capacitor voltage transformers, capacitors, and thyristor valves. Requirements for suspended equipment other than thyristor valves are given in Annex I. Suspended thyristor valves shall be qualified on a case-by-case basis.

There are four basic components to a suspended mounting configuration. They are as follows:

— The equipment

— A suspension system

— A restraint system

— Electrical connections

To achieve the intended seismic performance of the suspended equipment, the user must adequately design the suspension system, restraint system, and the electrical connections.

Figure 2 is provided to assist the user in understanding the terms used in conjunction with suspended equipment. It does not represent the only configuration. For example, the restraint system need not be below the equipment and both the suspension and the restraint systems may consist of more than one line.

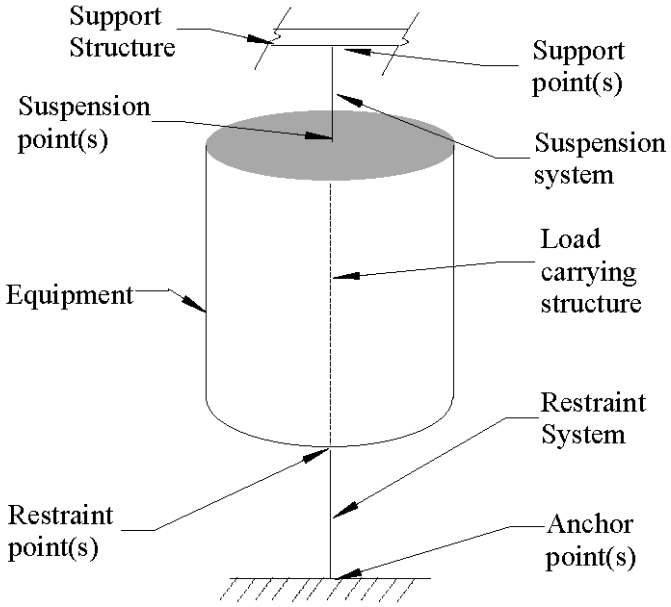

Figure 2—Definitions

There are numerous possible configurations for the mounting of suspended equipment, but seismically proven designs generally adhere to the following concepts:

a) *Equipment.* Suspended equipment shall meet the requirements of Annex I.

b) *Suspension system.* The purpose of the suspension system is to support the weight and loads imparted by the suspended equipment, the restraint system, and the suspension system. The suspension system consists of all hardware between the support point(s) and the equipment's suspension point(s) (I.1.4.2). The suspension system must be constructed such that it allows the suspended equipment to oscillate about the upper support point(s).

Copyright © 2006 IEEE. All rights reserved.

Copyright The Institute of Electrical and Electronics Engineers, Inc.
Provided by IHS under license with IEEE
No reproduction or networking permitted without license from IHS
Not for Resale

To allow the necessary freedom of motion and yet control the attitude of the suspended equipment, the upper connection of the suspension system to the upper support point(s) and the lower connection of the suspension system to the equipment suspension point(s) must each have rotational freedom about any horizontal axis.

c) *Restraint system.* All seismically qualified equipment that is suspension mounted should have a restraint system. The purpose of the restraint system is to control oscillation (i.e., maintain electrical clearances of the suspended equipment), without unduly increasing the equipment acceleration and to maintain a continuous downward force upon the suspension system. The restraint system encompasses all of the hardware from the suspended equipment's restraint point(s) (I.1.4.2) to the anchorage point(s), which are normally below the equipment.

The restraint system must be constructed such that it continuously maintains the electrical clearances of the suspended equipment. It is prohibited to have slack in either the suspension or the restraint system, neither initially nor as the system moves in an earthquake. Therefore, the restraint system must not go slack. Past field experience has proven that designs with initial slack or lines that go slack in an earthquake have experienced impact damage.

For reasons identical to those given for the suspension system, the connection of the restraint system to the equipment restraint point(s) must allow rotational freedom about, and translational freedom in, any horizontal axis. The connection of the restraint system to the anchorage point(s) must allow rotational freedom about any horizontal axis.

The restraint system is usually attached to anchors located below the equipment, but the restraint system need not be below the equipment. However, restraint systems must be capable of maintaining a continuous downward load upon the suspension system throughout a seismic event (to avoid any slack in the suspension system). For restraint systems that are not below the equipment, maintaining a continuous downward load typically entails the incorporation of axial stiffness into the suspension system to prevent vertical displacements. Without axial stiffness, the insulators may go slack, resulting in the equipment bouncing and causing impact loads.

A recommended, but not compulsory, type of restraint system is to incorporate a spring-damper mechanism. Care should be exercised not to over-damp the restraint system, thereby increasing the acceleration of the equipment.

A suspension system can have coincident restraint functions. This is done by providing full rotational freedom at the support and suspension points, using rigid insulators and providing adequate flexibility of movement of the conductor to allow free movement of the equipment. It is key to ensure that no contact arises due to potential large deflections of the system and to prevent any slack from occurring in the suspension system.

d) *Electrical connections.* To allow the necessary freedom of motion of the suspended equipment, the equipment's electrical connections must be made with suitably flexible conductors, which do not impede the free oscillations of the equipment. Also, the displacements of the entire suspended configuration should be accounted for when designing clearances with neighboring equipment or structures.

Typically, electrical conductors do not serve as part of the suspension or restraint systems. However, for certain equipment types [e.g., capacitor voltage transformers (CVTs)], the electrical conductor may provide the structural support. This is acceptable provided there are independent connectors at either end of the conductor capable of transferring the mechanical loads and the conductor can accommodate the structural loads.

The combination of unique requirements for a suspension mounted system (e.g., suitable structures from which to suspend the equipment, restraint anchorage points, physical clearances, and conductor terminals) may dictate the design of the suspended equipment. If this is the case, the user should provide the following information in their specification:

— The number and locations of the suspension and restraint points on the equipment.

— The direction and magnitude of the normal operating restraint load(s) at the restraint point(s).

Copyright © 2006 IEEE. All rights reserved.

Copyright The Institute of Electrical and Electronics Engineers, Inc.
Provided by IHS under license with IEEE
No reproduction or networking permitted without license from IHS
Not for Resale

5.8 Anchorage

Providing adequate anchorage is often the most cost-effective measure that can be implemented to improve the earthquake performance of equipment. It is important, as in the case of a support structure, that the anchorage used in the qualification closely simulate the in-service anchorage. Welded anchorage normally allows for a simpler and stiffer anchorage configuration and can be stronger than bolted anchorages.

It is the responsibility of the manufacturer to supply a product with the capability of being secured by a fastening method condoned by the user (either welded or bolted). The manufacturer shall state the anticipated seismic loads (shear, tension, compression, bending, if applicable) in combination with normal loads at the footprint(s) of the equipment. It is the responsibility of the user to ensure that the connection between the manufacturer's equipment and the immediate support (either a foundation, support structure, or other piece of equipment) is made so that it will properly transfer the anticipated load combinations.

The recommended equipment anchorage is made by welding the base to structural steel members embedded in or firmly anchored to a concrete foundation. The manufacturer designs the welds, including the size, location, and type, and shows them on the manufacturer's installation drawing and on the seismic outline drawing. All welds and welders should conform to applicable American Welding Society (AWS) specifications, such as ANSI/AWS D1.1 [B1].

If bolts are to be used, their size, strength, location, and materials should be shown on the manufacturer's installation drawings and on the seismic outline drawing.

The size and strength of the anchor systems (welds or anchor bolts) should be determined using either the ASD or the LRFD method, as described in A.2.1. It is recommended that mild ductile steel be specified, such as ASTM A36, ASTM 1554-36, or ASTM A307, and that the design requirements of the ASCE Substation Structure Design Guide be followed. The depth of embedment and the type of bonding to that portion of the anchor system within the foundation is to be determined by the user and should produce a strength greater than the strength of the anchor bolts. The intention here is to ensure that the bolt is weaker than the concrete so that the beginning of failure, should it occur, will be ductile. The strength of the steel portion of the anchor depends on the steel properties and the size of the anchor. The strength of the embedded portion of the anchorage depends on its embedment length, strength of concrete, proximity to other anchors, distance to free edges, and size of head at the embedded end of the anchor. Consideration should be given by the user to any unequal distribution of dynamic earthquake loading on the anchor bolts.

All anchor systems must withstand the forces resulting from the design earthquake in addition to other existing loads (refer to 1.8).

When designing equipment foundation anchoring systems, it is recommended that the anchor system be reviewed for adequacy to withstand the cyclic nature of the seismic forces. The anchor must withstand the shear, uplift, and compressive forces resulting from the design earthquake. Any anchoring system (e.g., expansion type, adhesive type, etc.) must be certified by the manufacturer as being acceptable for use in seismic applications. The manufacturer's recommendations for safety factors, embedment lengths, pullout design, and edge shear design should be reviewed, modified, and applied as required by the designer, taking into account the objectives of this recommended practice (refer to 8.2).

In the past, it has been considered good engineering practice not to use mechanical fasteners that rely on friction or wedging action to anchor equipment against earthquake loading. Although certain types of mechanical fasteners perform acceptably for tension and shear static loads, historical experience suggests that these types of anchors should not generally be used for tension and shear vibrating loads. In all cases, use caution and investigate qualification testing and *in situ* experience for these types of anchors.

Refer to A.4.2 for further information.

Copyright © 2006 IEEE. All rights reserved.

Copyright The Institute of Electrical and Electronics Engineers, Inc.
Provided by IHS under license with IEEE
No reproduction or networking permitted without license from IHS
Not for Resale

5.9 Conductor induced loading

Subclause 5.9.3 provides a brief overview of methods of decoupling equipment to minimize the effects discussed in 5.9.1 by providing flexible conductoring between equipment. Subclause 5.9.2 discusses observed displacements. For a detailed discussion of this topic, refer to IEEE Std 1527-2006 [B23].

5.9.1 Interconnection with adjacent equipment

All equipment, whether installed and operating or stored as spares, may be adversely affected by impacting an adjacent moving or stationary component. Therefore, care must also be given to the placement of important components so that failure or movement of adjacent components does not cause damage that would lessen the ability of a facility to operate.

Equipment that is interconnected by conductors must have some provision in the installation (e.g., sufficient flexible line slack) that allows for any relative deflection between the equipment that will occur during an earthquake. Likewise, in rigid bus installation, it is necessary to incorporate adequate flexibility to permit axial or longitudinal movement of individual major equipment assemblies while avoiding the transfer of excessive forces between the individual components.

5.9.2 Observed component displacements

Based on analyses, tests, and forensic engineering after earthquakes, it has been determined that individual items of major equipment and bus supports move by varying degrees depending on their mass, mounting height, type, and size of support structure, and so on. This movement results in the need for specific flexible bus configurations.

Depending on the equipment's resonant frequency and damping, it may experience small to large displacements at its conductor connection point. Table 1 represents typical values calculated for 2% damping.

The lower bound displacement in Table 1 is related to equipment with mass concentrated at their top, such as live tank circuit breakers or CVTs. The upper bound is related to equipment with mass and stiffness more evenly distributed. An average displacement value for most equipment supported on supports or pedestals is 1.3 times the lower bound value.

5.9.3 Decoupling equipment through flexible bus-work

The typical movements (displacements) given in Table 1 are for informational purposes only and should not be used in design. Equipment movement is dependent on equipment configuration. The displacement found in the qualification should be used in the design. The user is cautioned that deflections found from an RRS qualification method must be multiplied by two so that the values represent the ground acceleration. Wherever possible the design should provide additional slack or movement between equipment over that found in the qualification; that is, the required length should be less than the actual length.

Table 1— Typical equipment displacements for moderate and high qualification levels

Fundamental frequency (Hz)	Qualification level Displacements (mm)	
	Moderate	High
1.0	375–750	750–1500
2.0	100–200	200–400
3.0	45–90	90–180
5.0	16–32	32–64
8.0	6–12	12–24
10.0	3–6	6–12

Copyright © 2006 IEEE. All rights reserved.

Copyright The Institute of Electrical and Electronics Engineers, Inc.
Provided by IHS under license with IEEE
No reproduction or networking permitted without license from IHS
Not for Resale

The necessary conductor length between interconnected components can be estimated as follows:

$$L_o = L_1 + 1.5(\max u(t)) + L_2 \quad (1)$$

where

L_o is the minimum required conductor length. Note that the equivalent equation given in IEEE Std 1527-2006 [B23] is slightly different. This recommended practice is the more conservative approach.
L_1 is the straight line between connected points.
max $u(t)$ is the maximum relative displacement between equipment.
L_2 is the additional provision for conductor configuration under consideration.

The value max $u(t)$ can be estimated, using the maximum standalone displacements (u_n and u_m) of the equipment, by one of the following methods:

a) *Absolute sum—preferred method*. Add displacements directly

$$\max u(t) = u_n + u_m \quad (2)$$

b) *SRSS*. Add displacements using the square root sum of the squares

$$\max u(t) = \sqrt{u_n^2 + u_m^2} \quad (3)$$

c) *CQC*. Combine displacements using the complete quadratic combination[19]

$$F = \sqrt{\sum_n (\sum_m f_n \rho_{nm} f_m)} \quad (4)$$

where

F is the peak value of a response quantity (e.g., force or displacement)
f_n is the modal response quantity associated with mode n
f_m is the modal response quantity associated with mode m

$$\rho_{nm} = \frac{8\sqrt{\zeta_n \zeta_m}(\zeta_n + r\zeta_m) r^{\frac{3}{2}}}{(1-r^2)^2 + 4\zeta_n \zeta_m r(1+r^2) + 4(\zeta_n^2 + \zeta_m^2) r^2}$$

[19] See Wilson et al. in Clause 2.

Copyright © 2006 IEEE. All rights reserved.

Copyright The Institute of Electrical and Electronics Engineers, Inc.
Provided by IHS under license with IEEE
No reproduction or networking permitted without license from IHS
Not for Resale

ρ_{nm} simplifies when all modal responses have identical damping ratios to

$$\rho_{nm} = \frac{8\zeta^2(1+r)r^{3/2}}{(1-r^2)^2 + 4\zeta^2 r(1+r^2) + 8\zeta^2 r^2}$$

where

ρ_{nm} is the cross-modal coefficient
r is the ratio of modal frequencies $= \omega_m / \omega_n$, $r \le 1$
ζ is the damping ratio

$$\max\ u(t) = \sqrt{u_n^2 - 2\rho_{nm}u_n u_m + u_m^2}$$

Table 2 provides a comparison study among the three methods given above. A damping value of 2% was used for consistency. As observed from cases A and B, it is not the frequency that defines the combined deflections, but the ratio $r = f_1/f_2$. It is also clear from cases B through E that the difference between the SRSS and CQC is significant only when the frequencies of the two pieces of equipment are almost identical. As observed from cases B and F, the difference between the SRSS and the CQC decreases significantly when the deflection difference between the two pieces of equipment becomes significant. (That is, instead of 64 to 10 for case B, it is only 50 to 45 for case F.) In most cases, there is a significant difference between the absolute sum method and the SRSS and CQC methods. However, the user should use the absolute sum method whenever possible. All connection configurations transmit loads, including well-designed loops. The user should concentrate on designing the best slack configuration that does not violate electrical restrictions.

Table 2— Calculations examples for the maximum relative displacement (max *u*(*t*))

Case	f_1 (Hz)	f_2 (Hz)	u_1 (cm)	u_2 (cm)	$r = f_1/f_2$	ρ_{12}	(max *u*(*t*))		
							Absolute	SRSS	CQC
A	1.0	1	50	40	1.00	1.000	90	64	10
B	10.0	10	50	40	1.00	1.000	90	64	10
C	9.5	10	50	40	0.95	0.378	90	64	51
D	9.0	10	50	40	0.90	0.126	90	64	60
E	8.5	10	50	40	0.85	0.057	90	64	62
F	10.0	10	50	5	1.00	1.000	55	50	45

An example of Equation (1), using method a), and Figure 3 is as follows: For the installation of an adjacent circuit breaker and disconnect switch, the deflection of the circuit breaker is 55 mm and the deflection of the disconnect switch is 75 mm. When combined, the total deflection equals 130 mm for the out-of-phase scenario.

Example data:

Equipment #1 (circuit breaker) displacement: 55 mm
Equipment #2 (disconnect switch) displacement: 75 mm
Straight-line distance between equipment: 3000 mm

Equation (1):

a) max $u(t)$ = 55 mm + 75 mm = 130 mm.
b) L_1 = 3000 mm.
c) L_2 = 800 mm. The user selected configuration 1 (Figure 3) and after testing concluded that the addition length required was 800 mm. (See below for an explanation of L_2.)
d) L_o = 3000 mm + 1.5 × 130 mm + 800 mm ≈ 4000 mm or 4 m.

Copyright © 2006 IEEE. All rights reserved.

Copyright The Institute of Electrical and Electronics Engineers, Inc.
Provided by IHS under license with IEEE
No reproduction or networking permitted without license from IHS
Not for Resale

To determine whether configuration 1 is acceptable, check the following: A full half-circle arc with a diameter of 3 m (the clear distance between equipment) would yield a conductor length of 4.71 m ($\pi d/2$ or $\pi \times 3$ m/2 = 4.71 m). Therefore, the required length is less than the arc length (4.0 m < 4.7 1 m), so configuration 1 is acceptable (Figure 3).

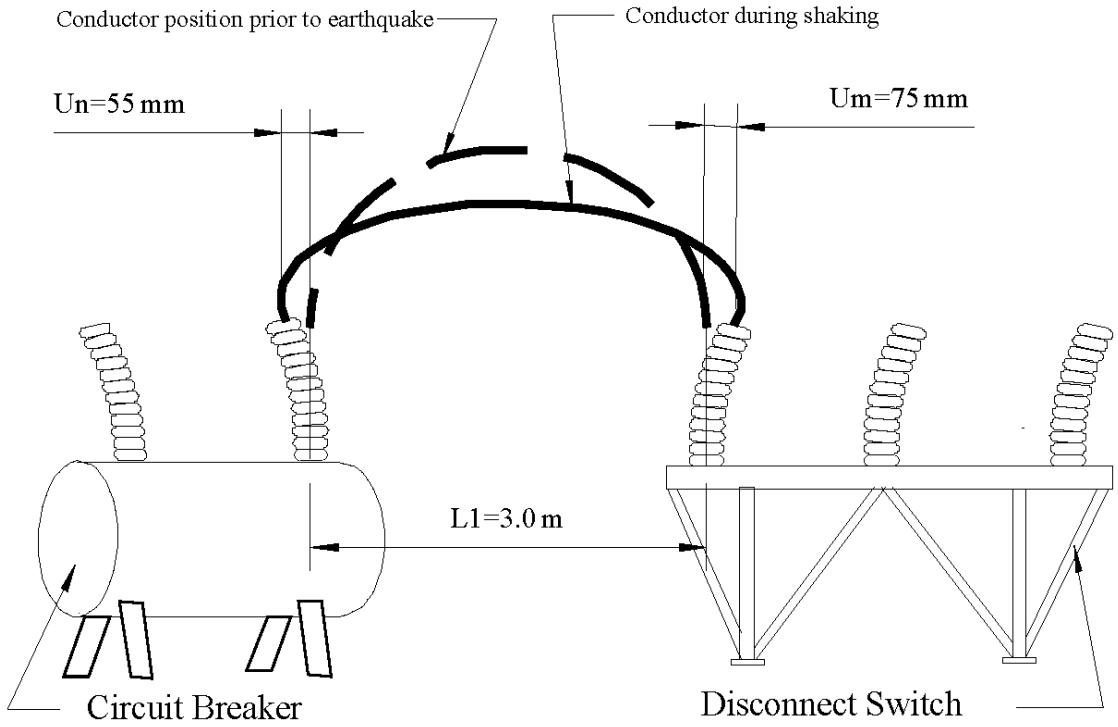

Figure 3—Example using configuration 1

To understand the necessity for step c), L_2, it is necessary to recognize two points: (1) The conductors are pre-bent to the configurations shown in Figure 4, such that the conductor does not add load to the equipment, except the dead weight of the conductor. (2) All configurations, including configuration 1, have rigid moment connections between the conductor and the insulator at both ends of the conductor. A high-voltage conductor is stiff and takes significant force to bend sharply. If the end connections between the conductor and insulator were pin connected, then the equipment insulators could move apart the full length of the conductor, or in this case 4.71 m. But the ends are moment connected. Therefore, as the insulators move apart, the conductor bends exerting a moment and a force onto the insulator (Figure 3 and Figure 4). Obviously, the stiffer the conductor, the greater the effect the bending of the conductor has due to the fixed-end-moment boundary conditions. The user must test or take into consideration the conductor shape, number of bundle conductors, the distance between the ends of conductors, and the stiffness of the conductor in determining how much addition conductor length is required. The conductor end connection displacing forces (Figure 4) should remain at or below a reasonable force level so not to adversely impact the equipment. In this case, the user determined that an additional length L_2 = 0.8 m was needed for the conductor under consideration. For a discussion of L_2, refer to IEEE Std 1527-2006 [B23].

Only the longitudinal motion (for the equipment/device to equipment/device length) is important for the flexible conductor. For the rigid conductor, both longitudinal and transverse motion can be important.

Copyright © 2006 IEEE. All rights reserved.

--`,,```,,,,````-`-`,,`,,`,`,,`---
Copyright The Institute of Electrical and Electronics Engineers, Inc.
Provided by IHS under license with IEEE
No reproduction or networking permitted without license from IHS
Not for Resale

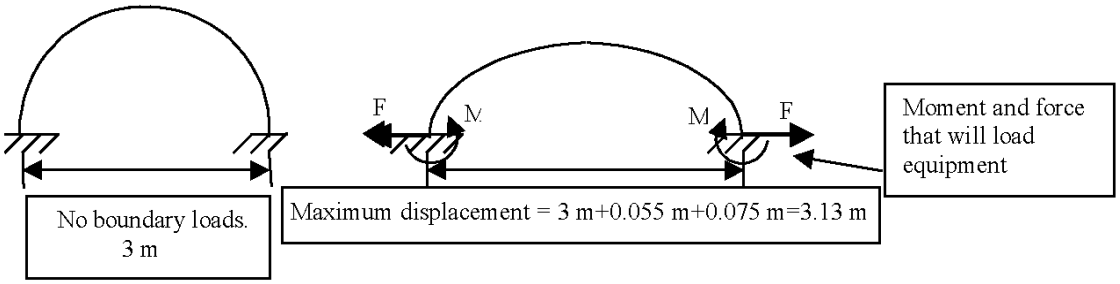

Figure 4—Loads from displacement

5.9.4 Conductor installation

The stranded bare conductor, although considered to be flexible, will not allow sufficient movement between equipment unless adequate length is included. The minimum distance between the termination points for which the stranded bare conductor may be used is determined by the minimum-bending radius of the conductor. The distance between termination points will determine the configuration of the conductor.

In addition to establishing the required amounts of differential movement, it is necessary to choose a practical conductor configuration that will provide the necessary limited flexibility. The flexible connection shall be configured to avoid compromising voltage gradients across bus and equipment insulators and to maintain the established phase-to-phase and phase-to-ground air insulation clearances.

It is generally not good practice to simply install a tension conductor to the equipment, even with significant sag. As the result of analysis and tests aimed at establishing the flexibility characteristics of standard all-aluminum conductors, four basic configurations (see Figure 5) and adaptations of each were found to be suitable. Other configurations are presented in IEEE Std 1527-2006 [B23]. The configurations are intended to provide the necessary conductor stretch and compression without applying excessive force to the bus and equipment terminations. The dimensions of configurations adequate for an application are determined according to voltage (clearances), conductor size (bending radius), equipment differential movement, and vertical and horizontal separation of the termination points (V and H).

Adding conductor length normally decreases dynamic load, but it can result in violation of required electrical clearances.

Some suggested configurations are shown in Figure 5.

It is recommended that conductor connections be configured to conform to a shape that has given good testing and/or earthquake performance, such as those shown in Figure 5.

The right end of configuration 2 exhibited basketing during lateral load testing, which simulated wind loads on the conductor. However, basketing has not been noticed in actual installations.

Copyright © 2006 IEEE. All rights reserved.

Copyright The Institute of Electrical and Electronics Engineers, Inc.
Provided by IHS under license with IEEE
No reproduction or networking permitted without license from IHS
Not for Resale

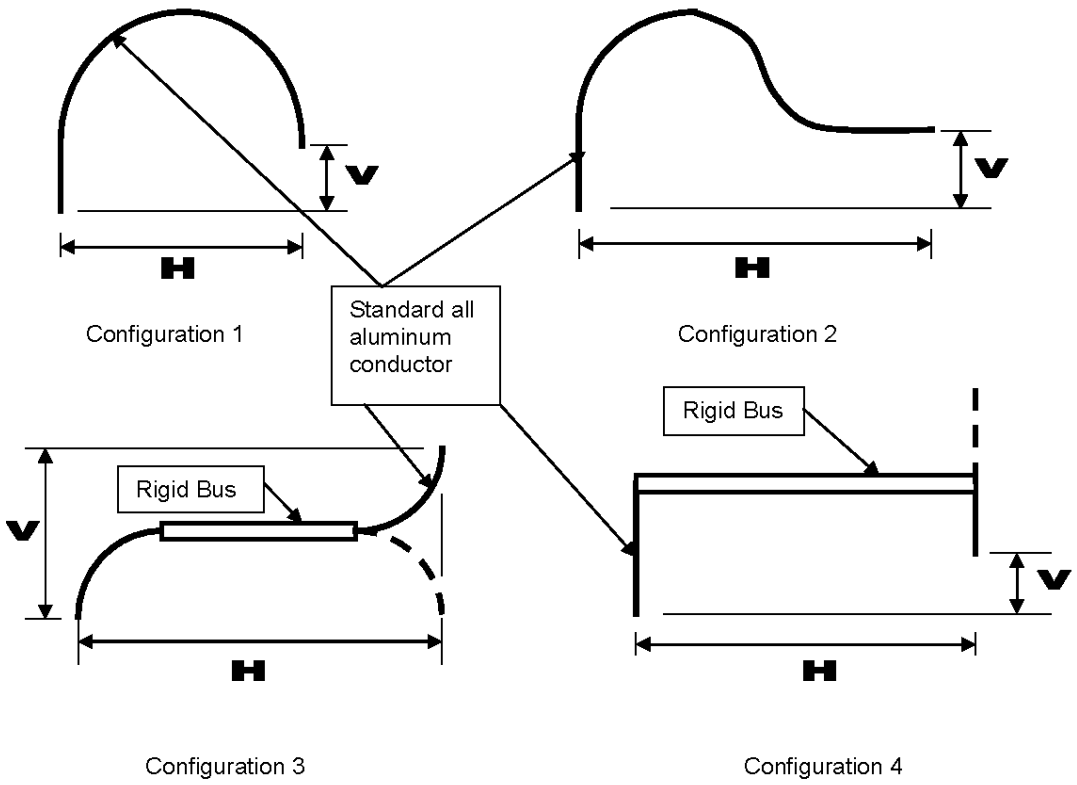

Figure 5—Basic slack configurations

5.9.5 Weight of conductor (static) and conductor dynamic loads

The weight of the conductor (static) and conductor dynamic loads does not seem to have been a significant cause of failure during past earthquakes when the conductor is installed according to the recommendations of 5.9.2 through 5.9.4.

When the conductor is strung from another component, the conductor weight may exert a longitudinal force due to catenary action. Depending on the amount of sag, this force can be significant. During an earthquake, the conductor responds dynamically. This dynamic response can be significant.

Based on earthquake performance and installations meeting the recommendations of 5.9.2 throughout 5.9.4, equipment need not be designed for concurrent earthquake, conductor weight (static), except as provided in A.1.1, and conductor dynamic loads.

5.10 Short-circuit loads

Short-circuit conditions typically produce a high fault current that in turn produces electromagnetic forces between conductors carrying the current. Depending on the spacing of the conductors, the generated forces can be significant. The greater the current and the smaller the conductor spacing, the greater the force generated.

The short-circuit force exists as long as the current flows and ceases when the current flow ceases. The faster the system recognizes there is a fault and opens the circuit via circuit breaker operation, the less the system will respond and be stressed.

Copyright © 2006 IEEE. All rights reserved.

--`,,```,,,,````-`-`,,`,,`,`,,`---

Copyright The Institute of Electrical and Electronics Engineers, Inc.
Provided by IHS under license with IEEE
No reproduction or networking permitted without license from IHS
Not for Resale

Sometimes by the time the earthquake shaking reaches a substation, the substation is de-energized due to damage in other substations, circuit breaker operation in adjoining substations, or faulting along the lines leading into the substation causing the substation circuit breakers to open.

Short-circuit loads have not been shown to be a significant cause of failure during past earthquakes. Equipment need not be designed for concurrent earthquake and short-circuit loading.

5.11 Wind and ice loads

Wind and ice loads do not seem to have been a significant cause of failure during past earthquakes.

Wind and ice loads can be significant on electrical equipment, especially if they are due to the loading on conductors.

Equipment need not be designed for concurrent earthquake and wind and ice loads.

6. Qualification methods: an overview

6.1 General

Static analysis, static coefficient analysis, dynamic response spectrum analysis, time history testing, sine-beat testing, and static pull testing are methods used in this recommended practice to qualify electrical equipment. This clause explains these methods. This clause does not provide qualification requirements. The requirements for the qualification methods are given in Annex A through Annex P. However, this clause discusses time history dynamic analysis, which the user may use as discussed within.

To qualify equipment to withstand earthquakes, the following dynamics factors should be considered:

a) *The expected magnitude of the excitation.* The geographical region, local site and soil conditions, historical seismic data, and degree of conservatism should all be considered when establishing the expected magnitude of excitation.

b) *The configuration of the equipment.* In general, taller, heavier, high-voltage equipment has lower natural frequencies and is more susceptible to seismic excitations, which results in higher stresses and motions. Therefore, simpler calculation methods are generally acceptable for lighter, higher frequency, or low-voltage equipment.

c) *The functional aspects of the equipment during and after a seismic event.* This is influenced by the importance of the equipment and level of acceptable risk. For important equipment, it may be advisable to demonstrate by test that components such as equipment mechanisms, relays, and contacts operate without malfunctioning before, during, and after a design earthquake. Refer to 6.6 and Clause 8 for more detailed information. Review of previous seismic performance or testing of similar equipment is recommended.

The use of seismic response spectra as a means for qualifying equipment either by calculation or by test has become the most widely accepted and powerful method. Figure A.1 and Figure A.2 give the RRS for high and moderate levels, respectively.

The maximum acceleration response of equipment with modes in the range of 1.1 Hz to 8 Hz is as indicated by these spectra. The response levels are also a function of damping, the less damping the higher the response. Equipment modes above 33 Hz are considered to be rigid and to respond at the constant ZPA level of the required spectrum.

Copyright © 2006 IEEE. All rights reserved.

Copyright The Institute of Electrical and Electronics Engineers, Inc.
Provided by IHS under license with IEEE
No reproduction or networking permitted without license from IHS
Not for Resale

6.2 Analysis methods

6.2.1 Static analysis

For rigid equipment (refer to Definition 3.1.21), with all modal frequencies above 33 Hz, apply a multiple of the ZPA at the center of gravity in each principal axis direction simultaneously and calculate the combined resulting stresses and anchorage loads. See A.1.3.1 for further requirements.

6.2.2 Static coefficient analysis

This type of analysis usually applies to equipment having a few important modes in the seismic range. A factor of 1.5 times the peak *g* value from the RRS is to be applied according to the mass distribution in each principal axis direction (vertical and two horizontal) simultaneously, unless otherwise specified in the annexes, and calculate the combined resulting stresses and anchor loads. The 1.5 factor accounts for multimode effects. Refer to 4.6.3 and A.1.3.2 for more details.

6.2.3 Response spectrum dynamic analysis

For complex structures with many modes in the seismic range, a detailed finite element model is needed. The RRS method is used with damping ratio determined in accordance with A.1.1.3 or a conservatively low value (e.g., 2%) is used. The lower frequencies of the mathematical model should, if possible, also be verified by simple-bump or other specified test methods. The loads and modal stresses are combined using the SRSS method, or closely spaced modes (within 10% of lower modes) are added directly and then the remaining modes are added using the SRSS method. An alternative method for combining modes is the CQC technique. (For requirements, see A.1.3.3.) Residual mass effects at the CG should be included.

6.2.4 Time history dynamic analysis

This method is a powerful tool when evaluating multiple, interconnected equipment or when studying equipment too large to test. Note that this method is intended as a qualification method for electrical equipment, only if the user specifically requires it, because it requires proper definition of the time history.

In linear analysis, a time history representing a seismic event can be applied to a linear finite element model to calculate the instantaneous stresses, deformations, and loads. Modal reduction techniques can be used to reduce models to important lower modes and degrees of freedom, and then calculations can be made more readily.

A time history as above can be applied to a finite element model having nonlinear elements representing important nonlinearities in equipment. It is more time-consuming and costly and requires direct time integration of all degrees of freedom. Modal or modal reduction methods do not apply in general unless nonlinearities are treated as pseudo-forces. The behavior of nonlinear elements may also differ significantly under different input time histories, even when the input time histories match the same response spectrum. For this reason, the use of multiple time histories may be needed. This is an approximate method requiring considerable engineering judgment.

6.3 Testing methods

Historically, testing has been done using a variety of test methods, as follows:

a) Single sine frequency

b) Continuous-sine

c) Sine beat

d) Decaying sine

Copyright © 2006 IEEE. All rights reserved.

Copyright The Institute of Electrical and Electronics Engineers, Inc.
Provided by IHS under license with IEEE
No reproduction or networking permitted without license from IHS
Not for Resale

e) Multiple-frequency

f) Time history

g) Random motion

h) Random motion with sine beats

i) Combination of multiple sinusoids

j) Combination of multiple sine beats

k) Combination of decaying sinusoids, and others plus combinations of any of the above.

l) Pull test

An important consideration, regarding methods that envelop the RRS, is that the calculated TRS of the table motion at the test facility envelops the RRS in a manner similar to that of an actual earthquake. That is, it envelops the RRS with amplitudes, frequencies, and energy levels that occur in a similar simultaneous manner.

The method of attaching equipment to the test table should be the same or equivalent to that used on the actual foundation or supporting structure. Strain bolts are recommended to measure anchorage loads.

Direction categories for testing include biaxial and triaxial. Primarily for device testing, it is important to introduce cross-effects due to the earthquake disturbance. Hence, multiple tests are required in different directions (orientations) of each system when biaxial testing is performed. Because the triaxial method requires only one test position, the consequent stress fatigue effects will be at a minimum in the equipment tested in this manner.

A biaxial machine with 100% horizontal and 80% vertical motion can be used in lieu of a triaxial table by mounting the equipment at 45° to the table motion with the table motion increased by 40% to meet the RRS in both directions simultaneously, which will simultaneously excite the two orthogonal principal directions. This process reduces the number of tests, but the magnitude of motion applied to the equipment in the direction of table motion may be too severe. The severity is dependent on the geometry and type of equipment.

Instrumentation to measure accelerations at the overall CG is recommended, but not mandatory. If the CG is outside the equipment, the closest practical location on the equipment should be used. The results can be used to calculate and verify foundation loads and the seismic performance of equipment on other supports.

The resonant frequency search test is for the determination of resonant frequencies and damping of equipment. The data obtained from the test may be an essential part of an equipment qualification; however, the test does not constitute a seismic test qualification by itself.

Instrumentation of the table should be such that rotational accelerations of the table (about the X, Y, and Z axes) can be determined at moderate excitation levels so that the excitation can be adjusted to more accurately represent the higher RRS motions or the facility should quantify the rotational characteristics with similar equipment installed.

After testing to the desired level is completed, a frequency search should be repeated and evaluated to look for unexpected changes of system frequencies indicating the presence of equipment damage. A shift in frequency of more than 20% from the pre-vibration search indicates the need for careful inspection for damage, but it does not disqualify a unit.

6.4 Special test cases

Generic testing beyond specified requirements (overtesting) may be accomplished by broadening the specification to include a wide variety of applications. However, it can produce a severe test motion and

Copyright © 2006 IEEE. All rights reserved.

Copyright The Institute of Electrical and Electronics Engineers, Inc.
Provided by IHS under license with IEEE
No reproduction or networking permitted without license from IHS
Not for Resale

care must be taken to avoid costly damage. Generic or overtesting if done carefully can lead to improved seismic designs at reasonable costs.

Fragility testing can be used to determine the ultimate capability of equipment. Such information serves to prove adequacy for more drastic earthquake disturbances and may conclusively show the weak link, which may result in improved seismic capability. It also provides experimentally derived information on the seismic margin of the equipment.

Where the equipment was not tested before installation, on-site testing can be accomplished by portable shaking devices. It has the advantage of including the effects of attachments or modifications made to the equipment and limited foundation and soil effects, but it is not typical of earthquake random type motion. However, the results can be used to update and improve calculations (models).

6.5 Qualification method for specific equipment

The table of contents of this recommended practice lists annexes for equipment types found in substations. Depending on the complexity of its structure, historic performance, and importance, a specification has been provided for either calculations or tests necessary to qualify each piece of equipment to withstand an earthquake. The annexes contain a recommended qualification outline for the listed equipment.

6.6 Functionality of equipment

The functional aspects of specific equipment are defined in the “Operational requirements” and the “Acceptance criteria” of the annexes. The ultimate requirement for the particular equipment is to be capable of functioning before, during, and after a seismic event. This requirement can only be verified by testing to a level equivalent to the particular seismic event and performing the required functions before, during, and after the test. Switches, linkages, relays, and so on must remain functional, or they must change state as required to perform their function, which includes both mechanical and electrical integrity requirements.

Functional requirements are only verified to the actual level of the test. On the other hand, structural requirements can be satisfied by lower levels of testing and extrapolating results to higher levels by comparing the actual stress measurements with the allowables provided failure modes are known and stresses at appropriate locations are measured.

6.7 Qualification by seismic experience data

Procedures for qualifying certain types of equipment through the use of actual earthquake experience have been developed in the nuclear power industry. The use of earthquake experience data as a qualification method is addressed in IEEE Std 344™-2004 [B17] and in subsequent revisions of that standard under development at the time of this writing.

Earthquake experience data typically applies to categories of equipment rather than to specific items. The documented performance record of the equipment category must demonstrate that there is no tendency for significant structural seismic damage over the range of ground shaking experienced in actual earthquakes.

This documented performance record consists of an inventory of equipment within the particular category that has experienced substantial earthquake ground motion, for which the post-earthquake condition of the equipment can be verified. This inventory of earthquake-affected equipment comprises a database for the equipment category.

Copyright © 2006 IEEE. All rights reserved.

Copyright The Institute of Electrical and Electronics Engineers, Inc.
Provided by IHS under license with IEEE
No reproduction or networking permitted without license from IHS
Not for Resale

The use of experience data may be considered as an alternative to testing and analysis only when the following criteria have been met:

a) The particular type of equipment can be shown to have no tendency for significant structural damage or performance degradation for the specified level of ground motion.

b) The specified ground motion is less than or comparable with the range of ground motions experienced by sites reviewed in compiling the database.

c) Items of equipment qualified by experience data must be shown to be generally represented by the equipment category for which an adequate database has been compiled. Representation means that a specific equipment item must fit within the database range of size, mass, and capacity; must be similar in operation and construction (including its support); and must contain no significant design differences compared with database equipment that might be sources of weakness under seismic loading. The equipment item need not be represented within the database by the specific manufacturer and model.

d) An adequate database inventory for a particular category of equipment should include about 50 examples (i.e., about 50 items of similar equipment) that have experienced earthquake ground motion comparable with or greater than the predicted level for the substation site. This database inventory should include multiple sites and multiple earthquakes.

e) The earthquake performance record for the category of equipment must demonstrate that there is no tendency for seismic damage in past earthquakes, or that sources of seismic damage are precluded by design or installation provisions for the particular item to be qualified.

f) Experience data may be used only when approved by the user or user's agent of the substation equipment.

Experience data can only be used to demonstrate the ability of equipment to survive the earthquake and remain operable afterward. It cannot be used to ensure that equipment such as circuit breakers, relays, or contacts will maintain correct operational state during shaking.

Procedures for qualification by experience data have been developed by the nuclear power industry for certain categories of equipment powered at voltages up to about 15 kV. These procedures are supported by an existing database of adequate size and detail and a standard set of restrictions and requirements for reviewing specific equipment items. These procedures are discussed in Annex Q and in the EPRI/SQUG standard [B10]. Qualification by experience data requires appreciable expertise; it is suggested that the standards developed by the nuclear industry be used whenever possible.

6.8 Response spectra

A response spectrum is a plot of maximum response (displacement, velocity, or acceleration) versus a system characteristic (frequency or period and damping ratio) for a single degree-of-freedom oscillator for a particular applied load, such as an earthquake acceleration time history. Computation of a response spectrum is shown in Figure 17 in Chopra [B7]. The response, for each single degree-of-freedom oscillator, to the acceleration time history is calculated by numerical evaluation of the Duhamel integral or by numerical solution of the equation of motion. The maximum response of each oscillator is plotted as a function of damping ratio and period or frequency. After plotting the maximum responses for a sufficient number of frequencies or periods at a specified damping ratio, a response spectrum is created. The damping ratio can be changed to develop a family of response spectra.

The response spectra used in this recommended practice are intended to reasonably envelop anticipated earthquakes. Different earthquakes will have different response spectra. Strong motion accelerometers in different locations for the same earthquake will likely record different acceleration time histories and thus may have different response spectra.

For shake table testing, a displacement time history can be fed to actuators or hydraulic rams that shake the table. Accelerometers can be located on the shake table to measure the acceleration time histories. These

Copyright © 2006 IEEE. All rights reserved.

--`,,```,,,,````-`-`,,`,,`,`,,`---

Copyright The Institute of Electrical and Electronics Engineers, Inc.
Provided by IHS under license with IEEE
No reproduction or networking permitted without license from IHS
Not for Resale

acceleration time histories can be evaluated to create test response spectra at specified damping ratios. If the test response spectra envelop the required response spectra at the same percent of damping, then the testing is acceptable.

Response spectra are used to calculate responses (strain, velocity, displacement, acceleration) for each natural frequency or mode shape in a dynamic analysis. After the maximum response for each mode shape is determined, the maximum total response can be calculated. The maximum total response is not obtained by adding the response variable of each mode shape, because different modes will obtain their maximum values at different times. The superposition of modal maximums is an upper bound on the actual total response and will significantly overestimate the response for most cases. This recommended practice, uses SRSS or CQC for combining modal maximums to obtain the total response.[14]

6.9 Damping

Damping is a characteristic of a structure. Damping should not be associated with a particular device or material (e.g., if a structure with a particular damping device/material achieves "x" percent damping, it cannot be assumed that the same level of damping can be achieved with that same device/material on a different structure).

Damping is in fact mode specific, but in the context of this recommended practice, the term is generalized to one single value. This generalized value of damping is applicable to all modes of vibrations and in any direction of movement and should therefore be conservative in nature (e.g., if a structure achieves a value of "x" percent damping in one axis and "y" percent damping in another axis, the lower value of the two damping values should be assumed as the generalized value).

Damping characteristics of a structure may change with the level of stress of the materials in the structure. All levels of damping associated with this practice should be associated with levels of stresses below the allowable material stresses mandated herein.

A maximum damping value of 2% can be assumed on all equipment and structures.

Claims of any damping beyond 2% must be substantiated by testing (A.1.1.3). Historically, the determination of damping of substation equipment has been focused on the damping associated with the horizontal response of equipment and with particular emphasis on the lower modes of vibration. This practice seems to have resulted in designs that have performed adequately in earthquakes and is thus condoned in this recommended practice.

7. Design considerations

7.1 Structural supports, excluding foundations

The structural support requirements provided herein are applicable to the equipment's "first support." (See Definition 3.1.9.) All other support structures should be designed according to the ASCE Substation Structure Guide. Connection of the "first support," including connections of the first support to ASCE designed supports, shall be designed according to the requirements of this recommended practice.

7.2 Foundation analysis

This subclause applies to the design of foundations and the analysis of the soil. It does not apply to anchorage. See ASCE Substation Structure Design Guide and A.4.2 for anchorage.

As an option to 7.2.1 and 7.2.2, the user may design the foundations to appropriate codes.

Copyright © 2006 IEEE. All rights reserved.

--`,,```,,,,````-`-`,,`,,`,`,,`---

Copyright The Institute of Electrical and Electronics Engineers, Inc.
Provided by IHS under license with IEEE
No reproduction or networking permitted without license from IHS Not for Resale

7.2.1 Pad type foundation supporting flexible equipment

Pad type foundations supporting flexible equipment may be designed using loads that are less than the foundation loads found in the qualification of the equipment and support. Foundation can be analyzed to the following:

$$F_p = 0.33 \times I_p \times W_p \text{ for High Qualification areas} \quad (5)$$

$$F_p = 0.2 \times I_p \times W_p \text{ for Moderate Qualification areas} \quad (6)$$

F_p is the lateral load applied at the center of gravity of the equipment/support; I_p is the importance factor, as defined by the ASCE Substation Structure Design Guide; and W_p is the weight of the equipment/support. As always, the dead weight of the equipment and foundation should be considered a vertical load. Normal operating loads, if applicable, should be included. F_p can be used for overturning and determining the loads on the soil. This method requires using working allowables for the soils, instead of ultimate.

7.2.2 Pad type foundations supporting heavy or rigid equipment

Pad type foundations supporting heavy or rigid equipment, such as transformers, may be designed to the same criteria as flexible equipment. Special care should be exercised when designing the foundation and evaluating the soils. Poor or marginal soils may require that engineered fill or piles be placed under the foundation. Limited settlement, rocking, cracked, and/or damaged foundations have been observed after earthquakes.

7.2.3 Pier and pile type foundations

Pier and pile type foundations supporting equipment should be designed to the loads found in the qualification process for the equipment and support. However, the soil may be analyzed by the same criteria and loads as the pad type foundations.[20]

If the electrical support structure is designed to act as an integral unit at the high and moderate performance levels and is located on multiple foundations, then consideration should be given to connecting the foundation with grade beams to minimize differential foundation displacement due to an earthquake.

7.3 Station service

Station service is one key element necessary to bring earthquake-damaged substations back on line. The station service normally comprises lower voltage equipment (except the transformer high-voltage side), and experience has shown that such equipment is generally inherently rugged. However, station service has been lost in earthquakes, which can often be traced to inadequate attention to detail. The following checklist can be used when designing the station service:

a) Verify that all equipment and supports are adequately anchored to the foundations.

b) Verify that all equipment is decoupled by providing adequate slack or jumper loops in the conductors and interconnections with rigid bus.

c) Verify that equipment meets the requirements of Annex B through Annex P.

d) Verify that the support structures are rugged.

e) Verify that there are no weak hinge points in the structures.

[20]The equation factors of 7.2.1 should be increased as deemed necessary by the engineer for tall, top-heavy pedestal-type equipment and support.

Copyright © 2006 IEEE. All rights reserved.

Copyright The Institute of Electrical and Electronics Engineers, Inc.
Provided by IHS under license with IEEE
No reproduction or networking permitted without license from IHS
Not for Resale

f) Verify that the bushings and their mounting fittings to the equipment are adequately designed.

g) Verify that there are no objects, such as trees or branches, which are outside of the station service area but can fall into the station service area.

h) It is desirable, if practicable, to place the station service equipment on one solid foundation. If liquefaction or soil settlement occurs, damage can be minimized using this technique. Also, differential movement between equipment is minimized.

i) All items, including "non-critical" items (such as light poles), that are within or near the station service area that have the potential of falling on station equipment or energized bus, should be considered as critical and designed not to fail, because their failure could cause the station service to fail.

j) Verify that no damage will result from the swinging of any suspended or hung equipment or article.

7.4 Emergency power systems

7.4.1 Station and other batteries

7.4.1.1 Station batteries

Experience in moderate and large earthquakes (magnitudes 6.4 and above) has shown that area-wide blackouts can occur well beyond areas of direct earthquake damage; thus, it is recommended that critical substations should have emergency generating systems. In the aftermath of an earthquake, travel times to deliver mobile emergency generating systems may be four or more times longer than normal.

Station batteries are needed for normal and emergency operation of control systems and emergency operation of communication systems. The capacity reserve of the battery, that is, the number of hours the battery can supply emergency load, typically ranges from 2 h to 6 h. Emergency generating systems can provide vital loads for an extended duration. For critical sites without emergency generating systems, battery capacity reserve should be determined by the time it would take to supply emergency power with a mobile generator.

During the life of a battery, it electrochemically degrades and its internal structure weakens. The service life of batteries is sensitive to their operating temperature. Their life is typically reduced by about half for every 10 °C above the rated operating temperature of 25 °C. The end of a battery's service life is usually defined when it can no longer provide 80% of its published capacity. Thus, for a battery to meet its load requirement at the end of its service life, it must have a published capacity of 125% of its design load. Optimum battery performance and service life can be achieved by implementing a surveillance and maintenance program for the type of battery in service (Refer to IEEE Std 450™-2002 [B18] and IEEE Std 484™-2002 [B19] for vented lead-acid batteries, IEEE Std 1106™-2005 [B20] for vented nickel-cadmium batteries, and IEEE Std 1187™-2002 [B22] for valve regulated lead-acid (VRLA) batteries).

7.4.1.2 Other batteries

Substations may have batteries in addition to station batteries for starting an engine generator, radio communications, and microwave communications. These batteries are usually much smaller than station batteries but should still be restrained so that they do not impact adjacent equipment, fall, or move so that power connections are damaged.

Copyright © 2006 IEEE. All rights reserved.

Copyright The Institute of Electrical and Electronics Engineers, Inc.
Provided by IHS under license with IEEE
No reproduction or networking permitted without license from IHS
Not for Resale

7.4.2 Emergency generating systems

The performance of emergency generating systems after earthquakes has not been good for several reasons. These reasons include inadequate anchorage of the engine-generator or fuel supply system, overturning or malfunction of the engine-generator control system, fouled fuel, uncharged starting batteries, or overloading of the system. Detailed discussion of issues related to the selection, installation, operation, maintenance, and testing of emergency generators is contained in the ASCE "Guide to Reliable Emergency Power for Lifelines and Critical Applications" [B1].

The most common problems with emergency generators are easily avoided, as follows:

a) *Generator anchorage.* Engine generators are often mounted on vibration isolation systems to keep vibrations of the engine generator from getting into the engine support structure. In most cases, these isolation systems are not necessary. If they are used, it is vital that the system that is supported be restrained so that its motion is limited and that it cannot fall off of its support system. Some isolation systems have self-contained restraints, but they are often made of cast iron and fail under earthquake induced loads. It is also important to provide all utility connections, such as the fuel line, control lines, power lines, and cooling water lines, with adequate slack and flexibility. Combustion air ducts and exhaust piping should incorporate flexible sections.

b) *Securing engine-generator-starting batteries.* Frequently, in otherwise well-engineered emergency power facilities, batteries that are used to start the engine generator are unanchored. In an earthquake, unanchored batteries can be damaged and, hence, unavailable to start the emergency engine. Batteries should be secured so that they cannot fall or slide and impact against each other or their support structure.

c) *Day tank anchorage.* Day tanks are small tanks located near the engine generator and fed from the main storage tank. Typically they consist of a closed fuel tank sitting in a second open tank. Although the overall system is typically anchored to the floor, the closed tank may not be anchored to the open tank in which it sits. In this case, fuel lines provide the restraint to secure the tank. The load path for all system components should be evaluated for adequate strength and limited flexibility.

d) *Fouled and contaminated fuel.* If diesel fuel is used, it should be treated with additives to prevent growth of micro-organisms and changed periodically, about every five years. Fouled fuel will clog injectors and filters. Under some conditions, partially filled tanks will allow water to condense and contaminate the fuel. Low pour point fuels (Diesel 1) have been found to be more stable in long-term storage than higher pour fuels (Diesel 2).

e) *Posted manual operating instructions.* Several conditions can prevent an engine from starting. For example, relays used to control and protect the engine may malfunction due to earthquake-induced vibrations. It is important that detailed instruction be posted near the engine for starting the units. These instructions should indicate the proper position for all switches and valves and sequence of actions needed to start the engine.

f) *Annually compare engine-generation capacity to its load*. Annually review electrical load on the engine generator to ensure that it is below its capacity. The load calculation should include the increased demand associated with inductive loads such as starting motors.

g) *Annual verification of starting batteries and charger.* Annually verify that the starting batteries are charged and the charging unit is operating properly.

h) *Tested at rated capacity.* The complete system should be tested at its rated capacity for several hours at least once a year. Preferably this should be done by simulating loss of normal station service and applying all emergency loads. If this is not practical, a load bank should be employed.

Copyright © 2006 IEEE. All rights reserved.

Copyright The Institute of Electrical and Electronics Engineers, Inc.
Provided by IHS under license with IEEE
No reproduction or networking permitted without license from IHS
Not for Resale

7.5 Telecommunication equipment

Three features common to telecommunication equipment can cause poor performance in earthquakes. They are as follows:

a) *Flexible anchorage details of communication equipment racks.* Telecommunication equipment racks are typically anchored to the floor by four bolts through large aluminum angles in front and back. Although this anchoring method may have adequate strength, it is very flexible. These racks can experience earthquake-induced motions of many centimeters at the top of the rack. It is important that cable connections be provided with adequate slack to accommodate these motions. These motions can be greatly reduced by providing an upper brace to the rack by attaching the top of the rack to an overhead cable tray. The design should also prevent stretching or pinching of cables between cable trays or between rack and cable tray.

b) *Communication cable trays.* Cable trays commonly used by the communication industry are constructed so that sections are connected with friction clips. If these trays are used to brace equipment racks, positive connections should be used in their assembly.

c) *Communication equipment circuit board or pack restraints.* Communication equipment often contains circuit boards, or circuit packs, that plug into a motherboard mounted in the equipment chassis. These boards should have positive restraints to prevent them from vibrating loose. The restraints can be provided by circuit board retractors with locks or with other means to restrain the boards.

8. Seismic performance criteria for electrical substation equipment

8.1 Introduction

This clause describes

a) Three seismic qualification levels (high, moderate, and low).

b) The RRS and/or requirements for each qualification level.

c) The substation equipment performance that can be expected for each qualification level.

d) The projected performance and how the performance levels and qualification levels are related to each other.

e) Guidelines to the equipment user or user's agent on how to select the appropriate qualification level.

8.2 Objective

The objective of this practice is to allow the user to secure individual equipment that will be completely undamaged and will continue to function after being subjected to the shaking described by the RRS for a given level, as specified in 8.3. It is further anticipated that the equipment will perform acceptably after ground shaking equivalent to the corresponding performance level, as described in 8.4 with little or no significant structural damage, and that most equipment will continue to function. However, some minor damage may occur and a small amount of equipment may not fully function after shaking to the performance level. (See 6.6 for a discussion of electrical function.)

Copyright © 2006 IEEE. All rights reserved.

Copyright The Institute of Electrical and Electronics Engineers, Inc.
Provided by IHS under license with IEEE
No reproduction or networking permitted without license from IHS
Not for Resale

8.3 Seismic qualification levels

As with all standards dealing with naturally occurring loads, such as earthquakes, the first step is to decide on the load conditions and boundaries. Qualification loads and acceptance criteria are established by reviewing the service environment of equipment, including events such as earthquakes.

Many records from actual earthquakes have been obtained using strong-motion instruments located at substation sites. Many had peak ground accelerations above 0.5*g* and a few around 1*g*.

However, there are several reasons why it is often impractical or impossible to test to these high levels, such as 1*g*. These include:

a) Test laboratories may not be able to attain these acceleration levels, especially at low frequencies.

b) More importantly, because some yielding of ductile materials is considered acceptable at the performance level, so long as the equipment remains functional, some structural components may be damaged and hence would be a financial loss.

c) Testing to the theoretical limit of brittle materials, such as porcelain, may constitute an unacceptable safety risk.

d) Equipment tested at the performance level may not be acceptable to the user (refer to 4.6.7) and therefore may have to be discarded, which results in economic loss.

For these reasons, qualification is normally done by testing or analysis at a reduced level, but with provisions made in the acceptance criteria, such that the anticipated performance is likely to match that obtained if the equipment had been tested to the realistic earthquake excitation levels. These reduced levels are defined here, and the provisions made in the acceptance criteria are discussed in 8.4.

The reduced test levels are defined as the seismic qualification levels. The three levels are the high, moderate, and low seismic qualification levels. The high and moderate seismic qualification levels are each tied to a specific RRS. The RRS defines the input motion used for testing or analysis, when seeking a given seismic qualification. The low seismic qualification level does not require actual testing, but it is tied to a set of stated requirements.

The shape of the RRS is a broadband response spectrum that attempts to account for the effects of earthquakes in different areas, encompassing magnitude/distance combinations, and considering site conditions ranging from rock to soft soil as described in NEHRP. Although the RRS has taken the above effects into account, it has not been derived by enveloping response spectra from historical earthquakes included in the evaluation. Indeed, the response spectra of many earthquakes exceed the RRS at some frequencies. Different damping percentages are specified, as shown in Figure A.1 and Figure A.2.

The RRS shapes bracket most substation site conditions and, in particular, provide longer period coverage for soft sites. However, very soft sites, stations located in the upper floors of buildings, and hill sites may not be adequately covered by these spectral shapes. The user may develop and use a site-specific response spectrum and be in compliance with this recommended practice, provided the site-specific spectrum envelops Figure A.1 or Figure A.2 for the high or moderate seismic qualification levels, respectively. It should be noted that this might require retesting of previously qualified equipment, with a higher associated cost.

8.3.1 High seismic level

Equipment that is qualified in accordance with this practice, meeting the objective described in 8.2 and using the high RRS as given in Figure A.1 is said to be seismically qualified to the high seismic level.

Copyright © 2006 IEEE. All rights reserved.

Copyright The Institute of Electrical and Electronics Engineers, Inc.
Provided by IHS under license with IEEE
No reproduction or networking permitted without license from IHS
Not for Resale

8.3.2 Moderate seismic level

Equipment that is qualified in accordance with this practice, meeting the objective described in 8.2 and using the moderate RRS as given in Figure A.2 is said to be seismically qualified to the moderate seismic level.

8.3.3 Low seismic level

Equipment that is qualified in accordance with this recommended practice, and using the low seismic criteria is said to be seismically qualified to the low seismic level. The low seismic level represents the performance that can be expected when good construction and seismic installation practices are used, but when no special consideration is given to the seismic performance of the equipment.

8.4 Projected performance

It is the intent of this practice that equipment qualified to one seismic qualification level would remain functional after a seismic event corresponding to a level of shaking twice that actually tested. This level is defined as the performance level. As equipment qualified to a seismic qualification level is tested or analyzed to an RRS that is only half the performance level, projections must be made of its anticipated performance. This projected performance must be sufficient that equipment qualified to a seismic qualification level would likely perform satisfactorily if it was to be tested to the performance level. The performance levels and the corresponding seismic qualification levels are related to each other by a factor of two. As the seismic qualifications allow for testing at an RRS that is less than the performance level, acceptable performance at the performance level is provided for in the acceptance criteria discussed in A.2, and results from the allowable stress design basis specified in A.1 though A.2.

Projecting the performance beyond the qualification level (to the performance level) is justified if the dynamic response of the equipment is generally understood, if the failure modes are known, and if the critical stress points or other critical variables associated with the failure mode are known and can be measured. If these conditions are met, then it is reasonable to test at the reduced levels allowed by the seismic qualification levels, to monitor the critical points, and to apply acceptance criteria that would indicate performance equivalent to the performance level. For allowable stress design basis, equipment qualified is evaluated against allowable stresses that typically vary from 50% of ultimate strength (for non-ductile components) to 80% of yield strength (for ductile components). Similar results are obtained from the LRFD basis.

These methods result in a projected performance that is twice that obtained using the RRS alone, either directly or when considering inelastic behavior of the equipment and its supports, material over-strength, and other factors described below. As such, the projected performance is automatically obtained through application of the acceptance criteria and the user need not make further allowances for it.

For consistency, analysis will also be performed at the RRS, with the acceptance criteria the same as for tested equipment.

When the acceptance criteria are applied to testing or analysis performed at a qualification level, the results are projected to be equivalent to the corresponding performance level. However, unidentified failure modes and/or non-linearities may cause a discrepancy between the actual performance of the equipment and the projected performance. The actual performance may exceed or be less than the projected performance. This uncertainty is the reason the term “projected” is used. This is also the reason that equipment can only be claimed to meet the performance level if it was actually tested to the performance level, which is twice the RRS.

Copyright © 2006 IEEE. All rights reserved.
--`,,```,,,,````-`-`,,`,,`,`,,`---

Copyright The Institute of Electrical and Electronics Engineers, Inc.
Provided by IHS under license with IEEE
No reproduction or networking permitted without license from IHS
Not for Resale

Some possible reasons for variation in actual limits of acceptable performance as compared with projected performance are given as follows:

a) *Allowable stress design basis or LRFD basis.* Allowable stress or LRFD can be used as the acceptance criteria for steel and aluminum. An acceptable stress is a function of the loading mechanism, loading combinations, and material type. Consequently, a uniform projected performance is not expected, but it is anticipated from historical performance that these materials will be adequate at two times the RRS.

b) *Variability in materials.* The natural variability in material strengths from unit to unit allows for the statistical probability that components may perform at less or greater than expected capacity.

c) *Increased damping or energy dissipation due to inelastic behavior*. For most materials, the hysteresis damping capability increases at the higher levels of stress normally associated with higher levels of shaking.

d) *Uncertainties in the locations of critically stressed components.* If the locations of the highest stresses within the equipment are not identified and thus not monitored during testing or evaluated in analysis, the equipment may experience premature failure in an earthquake or when attempting to test at the performance level.

e) *Uncertainties in equipment response.* The response of the equipment to the dynamic loading or inelastic behavior may be different at levels exceeding the RRS. If this is not anticipated, premature failures may occur.

8.4.1 Performance levels

Due to the wide range of anticipated ground motions, and the desire to avoid the possible higher costs associated with designing to the absolute highest level, this practice defines three performance levels to span the desired performance for expected seismic exposure levels in different regions. These performance levels are defined as the high performance level for peak ground motions up to 1.0*g*, the moderate performance level for peak ground motions up to 0.5*g*, and the low performance level for peak ground motions up to 0.1*g*. Note that the high and moderate performance levels can only be obtained through testing. Neither testing nor analysis is required to demonstrate the low performance level.

As stated in 8.2, it is desired that equipment qualified to this practice will have a high probability of being operational after a seismic event with ground motions at the maximum value given for a particular performance level. Indeed, it would be preferable to test equipment with accelerations corresponding to these maximums, and this is given as an option in this recommended practice. Equipment so tested is said to be qualified to the performance level, and the only way it can be said to be qualified to the moderate or high performance levels is by direct testing at the given level. This option provides a high degree of assurance that the equipment will function after experiencing an earthquake fitting into the boundaries of the given performance level.

As discussed in 8.3, equipment is normally qualified to the RRS level. However, the manufacturer has the option to test to the performance level and thereby qualify the equipment to this level. If this is done, the requirements are as follows.

8.4.1.1 High performance level

Equipment that is shake-table tested in accordance with this practice, meeting the objective described in 8.2 and using test levels that are twice the high RRS as given in Figure A.1 is said to be qualified to the high performance level. This term cannot be applied to equipment tested at reduced levels or analyzed at any level.

Copyright © 2006 IEEE. All rights reserved.

--`,,```,,,,````-`-`,,`,,`,`,,`---

Copyright The Institute of Electrical and Electronics Engineers, Inc.
Provided by IHS under license with IEEE
No reproduction or networking permitted without license from IHS
Not for Resale

8.4.1.2 Moderate performance level

Equipment that is shake-table tested in accordance with this practice, meeting the objective described in 8.2 and using test levels that are twice the moderate RRS as given in Figure A.2 is said to be qualified to the moderate performance level. This term cannot be applied to equipment tested at reduced levels or analyzed at any level.

8.4.1.3 Low performance level

Equipment in this level should meet the objective described in 8.2 without testing or analysis. However, the requirements of A.1.1.4 shall be met.

8.5 Seismic qualification

The discussion of 8.4 pertains to the structural performance of the equipment. Qualification by analysis provides no assurance of electrical function (refer to 6.6). Shake-table testing provides assurance for only those electrical functions verified by electrical testing and only to the RRS level, not to the performance level.

Qualification techniques are established based on three criteria, as follows:

a) *Voltage level*: Higher voltage equipment has historically and theoretically demonstrated an increased vulnerability to seismic damage. Thus, the greater kilovolt level for any given type of equipment requires a more stringent qualification procedure.

b) *Historical performance*: Historical performance of general types of equipment (e.g., disconnect switches) has demonstrated the susceptibility of the equipment to seismic damage and the suitability of specific qualification procedures.

c) *Equipment importance*: Equipment critical to the function of the substation requires a more stringent qualification procedure.

8.5.1 High and moderate seismic qualification levels

The high and moderate RRS are shown in Annex A, Figure A.1 and Figure A.2, respectively. The equations for the spectra are listed in Figure A.1 and Figure A.2.

8.5.2 Low seismic qualification level

A stringent seismic qualification, such as is required to meet the high and moderate seismic qualification levels, is not required for equipment qualified to the low seismic qualification level.

In general, it is expected that most equipment will have acceptable performance at 0.1*g* and less.

8.6 Selecting the seismic level for seismic qualification

A degree of judgment and advanced planning is needed in selecting the qualification level to be used. The site hazard should not be expected to fall directly on the high, moderate, or low seismic qualification level and a decision to take more risk or less risk will need to be made. It is recommended that large blocks of service area be dedicated to a single level as discussed in 4.4. Also, many operational factors will need to be considered when selecting equipment to go into the active inventory of an operating utility. Therefore, it is recommended that the user should evaluate all sites in its entire service territory and establish a master plan, evaluating which sites are high, moderate, or low qualification levels (4.4).

Copyright © 2006 IEEE. All rights reserved.

Copyright The Institute of Electrical and Electronics Engineers, Inc.
Provided by IHS under license with IEEE
No reproduction or networking permitted without license from IHS
Not for Resale

As the performance level of equipment is often projected from tests conducted at the RRS level or analyses, there is uncertainty as to the true performance level. To reduce the risks of unfavorable performance associated with this uncertainty, the user may wish to assign the high qualification level to sites with a PGA less than, but approaching, 0.5*g*.

8.6.1 Earthquake hazard method

The earthquake hazard method is the preferred approach and can be used at any site.

The procedure to select the appropriate seismic qualification level (high, moderate, or low) for a site consists of the following steps:

a) Establish the mean plus one standard deviation peak ground acceleration and response spectra associated with the maximum credible earthquake that can impact the substation. As an alternative, the 2% probability of exceedance in 50-year mean peak ground acceleration and response spectra can be used. In developing the peak ground motion and response spectra, local site conditions shall be considered.

b) The resulting site-specific peak acceleration values should then be used to select the qualification level (high, moderate, and low) that best accommodates the ground motion expected. If the peak ground acceleration is equal to or less than 0.1*g*, the low qualification level should be used. If the peak is greater than 0.1*g* but equal to or less than 0.5*g*, the moderate qualification level should be used. If the peak is greater than 0.5*g*, the high qualification level should be used. Use of one of the three qualification levels given in this recommended practice and the corresponding required response spectra is encouraged. Use of different utility specific criteria will require requalification of the equipment and does not meet the intent of this recommended practice in regard to uniformity.

c) This procedure assumes the accelerations at the predominant frequencies of the component as given by the site specific response spectra are below those that are given by response spectra in Figure A.1, but it is anchored at the projected performance level of 0.5*g* for moderate qualification, and at the projected performance level of 1.0*g* for high qualification. If the accelerations at the components predominant frequencies are higher for the site-specific spectra, higher qualification may be appropriate.

If new information becomes available about the seismic risk in the service area, this information should be considered in selecting the qualification level.

8.6.2 Seismic exposure map method

Users of this recommended practice in countries other than the United States, Mexico, and Canada should develop an equivalent seismic exposure map procedure. It is recommended that the map procedure be developed using a method similar to that described in the following clauses. The method should yield results similar to or more conservative than 8.6.1.

If maps do not exist, the earthquake hazard method for specific sites is recommended.

8.6.2.1 United States

The IBC ground motion maps may be used. The IBC maps provide spectral acceleration levels at periods of 0.2 s and 1.0 s for the maximum considered earthquake.

To select the appropriate seismic qualification level, follow the steps outlined below:

a) Determine the soil classification of the site (A, B, C, D, E, or F) from section 1615.1.1 Site Class definitions.

b) Locate the site on the maps (section 1615.1) for the Maximum Considered Earthquake Ground Motion 0.2 s Spectral Response Acceleration (5% of critical damping), Site Class B.

Copyright © 2006 IEEE. All rights reserved.

Copyright The Institute of Electrical and Electronics Engineers, Inc.
Provided by IHS under license with IEEE
No reproduction or networking permitted without license from IHS
Not for Resale

c) Estimate the site 0.2 s spectral acceleration, S_s, from this map.

d) Determine F_a from Table 1615.1.2(1), value of site coefficient F_a as function of Site Class and mapped spectral response acceleration at short periods (S_s), and adjust S_s for site coefficient.

e) The peak ground acceleration to select the seismic qualification level can be found by $S_s/2.5$.

f) Use the peak ground acceleration to select the seismic qualification level. If the peak ground acceleration is equal to or less than 0.1*g*, the low qualification level should be used. If the peak is greater than 0.1*g* but equal to or less than 0.5*g*, the moderate qualification level should be used. If the peak is greater than 0.5*g*, the high qualification level should be used.

8.6.2.2 Canada

Seismic zoning maps or tables, located in the 11th edition of the NBCC, may be used. The NBCC maps provide contours of peak horizontal firm ground acceleration and velocities for a probability of exceedance of 10% in 50 years (i.e., 475-year return period).

To select the appropriate seismic qualification level, follow the steps outlined here:

a) Determine the foundation category (1 to 4) at the site as defined in Table 4.1.9.1.C of the National Code of Canada.

b) Locate the site on the NBCC peak acceleration-zoning map.

c) Determine the site peak firm ground acceleration from the map (or the tabulated values provided in the NBCC for some sites).

d) Multiply the firm ground acceleration by 1.5.[21]

e) Multiply that value by the appropriate Foundation Factor from Table 4.1.9.1.C of the National Code of Canada to obtain the site peak ground acceleration.

f) Select the appropriate seismic level. If the site peak ground acceleration is less than 0.1*g*, the site is classified as low. If the site peak ground acceleration is greater than 0.1*g*, but less than or equal to 0.5*g*, the site is classified as moderate. If the site peak ground acceleration is greater than 0.5*g*, the site is classified as high.

8.6.2.3 Mexico

To select the appropriate seismic qualification level, follow the steps outlined here:

a) Locate the area on the seismic zoning map of Manual de Diseño de Obras Civiles de la Comisión Federal de Electricidad (MDOC/CFE). Seismic zones from A to D reflect from low to high the peak acceleration level expected on stiff soil.

b) Establish the soil classification of the substation site as follows:

1) Soil type I: A soil formation with rock of any characteristic that has shear wave velocity greater than or equal to 700 m/s.

2) Soil type II: A soil formation whose effective shear wave velocity and dominant period are such that

$$\beta_o \leq \beta_s < 700 \text{ m/s}$$

[21]This factor is applied because the NBCC seismic zoning maps show accelerations, which do not have the same probability of exceedance as the seismic level accelerations defined in this recommended practice. Experience at various Canadian sites has shown that the computed peak firm ground acceleration for a probability of exceedance of 2% in 50 years is typically about 1.5 to 3.0 times as high as the peak firm ground acceleration for a probability of exceedance of 10% in 50 years. For critical sites, it is recommended that users consider the use of a factor larger than 1.5; in such cases, it is advisable to consult an engineering seismologist familiar with the area.

Copyright © 2006 IEEE. All rights reserved.

Copyright The Institute of Electrical and Electronics Engineers, Inc.
Provided by IHS under license with IEEE
No reproduction or networking permitted without license from IHS
Not for Resale

or

$$\beta_s < \beta_o \text{ and } T_s \geq T_o(1- \beta_s/\beta_o)$$

3) Soil type III: A soil formation whose effective shear wave velocity and dominant period are such that

$$\beta_s < \beta_o \text{ and } T_s < T_o(1- \beta_s/\beta_o)$$

where

T_s is the dominant site period in shear waves
β_s is the effective shear wave velocity of the site
T_o is the characteristic period depending on the seismic zone given in Table 3
β_o is the characteristic velocity depending on the seismic zone given in Table 3

The site parameters β_s and T_s can be obtained as

$$\beta_s = H_s/\Sigma(h_m/\beta_m)$$

$$T_s = 4H_s/\beta_s$$

where

H_s is the depth of the soil layers overlying the rock
h_m is the thickness of the mth soil layer
β_m is the shear wave velocity of the mth soil layer

c) Determine the site coefficient *S* from Table 4 to account for the effects of the local soil conditions.

d) Estimate the peak rock acceleration *Ar* from the seismic hazard maps of PSM, Peligro Sísmico en México, by locating the substation site on the map indicating the appropriate return period selected for seismic qualification; interpolation or the higher adjacent value may be used. Return periods from 100 to 200 years are recommended for the west coast of Mexico due to its high seismicity; the former is typical of Mexico building codes.

e) Obtain the peak ground acceleration *Ag* for the site as

$$Ag = S\,Ar$$

Table 3—Values of T_o and β_o

Seismic zone	T_o (s)	β_o (m/s)
A	5.3	400
B	5.3	400
C	4.7	500
D	2.5	500

Copyright © 2006 IEEE. All rights reserved.

Copyright The Institute of Electrical and Electronics Engineers, Inc.
Provided by IHS under license with IEEE
No reproduction or networking permitted without license from IHS
Not for Resale

Table 4—Value of the site coefficient *S*

Seismic zone	Soil type		
	I (stiff soil)	II (intermediate soil)	III (soft soil)
A	1	2.0	2.5
B	1	2.0	2.5
C	1	1.8	1.8
D	1	1.7	1.7

Select the seismic qualification level as follows:

— If $Ag \leq 0.1g$, the area is classified as low.

— If $0.1g < Ag \leq 0.5g$, the area is classified as moderate.

— If $Ag > 0.5g$, the area is classified as high.

The following is provided as an example, using Manzanillo, Colima as the represented area: longitude 104.28 and latitude 19.05. Local soil conditions are stable deposit of sands with effective shear wave velocity β_s = 590 m/s. The recurrence interval for large earthquakes is for a 10% probability of exceedance in 20 years of exposure period, which is about a 200-year return period.

— By using the MDOC/CFE seismic zoning map, the area belongs to seismic zone D.

— From Table 4, β_o = 500 m/s for seismic zone D. As $\beta_o \leq \beta_s < 700$ m/s, the soil is classified as type II.

— For seismic zone D and soil type II, the site coefficient is $S = 1.7$ according to Table 4.

— Beginning with the PSM seismic hazard maps, the peak rock acceleration for a 200-year return period is about 60% of gravity; that is, $Ar = 0.6g$.

— The peak ground acceleration for the site results in $Ag = 1.7 \times 0.6g = 1.0g$.

— As $Ag > 0.5g$, the high seismic level should be selected.

Copyright © 2006 IEEE. All rights reserved.

--`,,```,,,,````-`-`,,`,,`,`,,`---

Copyright The Institute of Electrical and Electronics Engineers, Inc.
Provided by IHS under license with IEEE
No reproduction or networking permitted without license from IHS

Not for Resale

Annex A

(normative)

Standard clauses

NOTE—Annex B through Annex P provide the qualification requirements for electrical equipment, such as circuit breakers and transformers. Some qualification requirements are common to all equipment. So as not to repeat these requirements in each annex, those requirements are given once in Annex A, with Annex B through Annex P referring back to Annex A.

A.1 Qualification procedures

A.1.1 General

The equipment shall be tested or analyzed in its equivalent in-service configuration,[22] including pedestal or another support structure. It is preferable that the exact in-service configuration be tested or analyzed. However, it is recognized that there are times when that is not practical or economical. An equivalent structure, as defined in 5.5 may be used. The effects of operating pressure, conduit, sensing lines, and any other interfaces supplied by the manufacturer shall be considered and included in the analysis or test, unless otherwise justified.

Only the most seismically vulnerable piece of equipment out of a family of equipment need be tested or analyzed, provided the requirements of 4.7 are met.

Existing qualifications may be acceptable and need not be repeated provided the requirements of 1.4 are met.

Porcelain, glass, and ceramic components that have been shake-table tested shall not be provided to the user, unless the user is notified in writing and has provided written acceptance of the tested component.

Any equipment or equipment component that does not comply with the acceptance criteria or the functional requirements shall not be provided to the user.

Loads/stresses found through analysis or test shall include seismic, dead, pressure, and normal operating loads.

When testing equipment, the following weight shall be added to the terminal connection point:

a) 500 kV and greater 11 kg (25 lbs)

b) 161 kV to less than 500 kV 7 kg (15 lbs)

These weights represent the lower range of weight associated with a corona ring, conductor connection hardware, and 30 cm (1 ft) of conductor that is assumed to move with the top of the equipment.

Installation of substation equipment with additional mass at their conductor connections, such as test equipment at the end of a bushing, does not meet the intent of this recommended practice, unless the equipment was qualified with this added weight.

[22] Guidelines on permissible variations between a qualification configuration and an intended installation configuration are given in 4.10 and 5.5.

Copyright © 2006 IEEE. All rights reserved.

Copyright The Institute of Electrical and Electronics Engineers, Inc.
Provided by IHS under license with IEEE
No reproduction or networking permitted without license from IHS Not for Resale

Some monitoring requirements are not directly used in the acceptance criteria. However, selected data need to be collected to better understand the dynamic response of equipment.

A.1.1.1 Triaxial analysis and testing

Analysis and time history testing shall be triaxial, unless as otherwise allowed in A.1.1.2. A test response spectrum that envelops the RRS shall be applied in the two perpendicular horizontal axes of the equipment together with a response spectrum in the vertical axis that shall have an acceleration of 80% of that in the horizontal axes.

Analysis shall use the SRSS method to account for orthogonal acceleration effects. The SRSS method, as used in this recommended practice, combines seismic stresses at a particular location or combines local seismic forces acting on a particular element of a structure system. With this method, the stresses or local forces associated with each maximum required orthogonal seismic response are determined separately and then combined by squaring each value, adding them algebraically, and then taking the square root of that sum. The result of this calculation is the maximum seismic stress or force at the location or element in question, which shall then be applied in the direction that produces the most severe equipment stresses.

A.1.1.2 Biaxial testing

Biaxial time history testing (one horizontal and the vertical) may be used if it can be shown that no significant coupling exists in the equipment between the two horizontal axes to give additive responses in the unexcited axis or if the input acceleration is increased to account for any additive response. If biaxial testing is used, two separate tests shall be made, one for each principal horizontal axis. If both horizontal axes are symmetrical and have the same structural shape, only one horizontal axis test need be performed.

In lieu of showing that no significant coupling exists and performing two separate tests, one biaxial test may be conducted for both the time history test and the sine beat test, provided the equipment is rotated 45 degrees to its principal horizontal axis and the horizontal acceleration is increased by a factor of 1.4. For the sine beat test, the resonant frequencies shall be in the rotated axis.

All other requirements given in A.1.1.1 shall be met.

A.1.1.3 Damping

Damping can either be assumed at a conservative level (refer to 6.9) or determined by any of the following methods:

a) *Measuring the decay rate.* The equivalent viscous damping can be calculated by recording the decay rate of the particular vibration mode. This procedure is often referred to as the logarithmic decrement method.

b) *Measuring the half-power bandwidth.* The equipment should be excited with a slowly swept sinusoidal vibration. The response of any desired location in the equipment is measured and plotted as a function of frequency. From these response plots, the damping associated with each mode can be calculated by measurements of the width of the respective resonance peak at the half-power point.

c) *Curve fitting methods.* The equipment is excited by swept sine, random, or transient excitation, and a response transfer function is developed. The modal damping is obtained by fitting a mathematical model to the actual frequency response data (transfer function). This curve fitting will smooth out any noise or small experimental errors.

Copyright © 2006 IEEE. All rights reserved.

Copyright The Institute of Electrical and Electronics Engineers, Inc.
Provided by IHS under license with IEEE
No reproduction or networking permitted without license from IHS
Not for Resale

A.1.1.4 Low seismic qualification level

Neither a seismic report, seismic outline drawing, nor a seismic nameplate is required. However, the following shall be met:

a) *Anchorage*. Anchorage for the low seismic level shall be capable of withstanding at least 0.2 times the equipment weight applied in one horizontal direction combined with 0.16 times the weight applied in the vertical direction at the center of gravity of the equipment and support. The resultant load shall be combined with the maximum normal operating load and dead load to develop the greatest stress on the anchorage. The anchorage shall be designed using the requirements of A.4.2.

b) *Defined load path*. The equipment and its support structure shall have a well-defined load path. Documentation of the load path is not required. However, the manufacturer shall design the equipment such that it adheres to the characteristics described herein and provides a stable and adequately braced load path. The determination of the load path shall be established (see A.1.3.4).

c) *Slack.* Adequate slack and flexibility should be provided to conductor connections between equipment.

A.1.2 Test qualifications

A.1.2.1 Resonant frequency search test

The resonant frequency search test is for determining the resonant frequencies and damping of equipment. The data obtained from the test are an essential part of an equipment qualification; however, the test does not constitute a seismic test qualification by itself.

A sine sweep frequency search shall be conducted at a rate not greater than one octave per minute in the range for which the equipment has resonant frequencies, but at least from 1 Hz, in the two horizontal axes and the vertical axis to determine the resonant frequencies and the damping. The amplitude shall be no less than 0.05*g*. It is suggested that an amplitude of 0.1*g* be used. Damping may be found using the half-power bandwidth method. See item b) in A.1.1.3. A frequency search above 33 Hz is not required. No resonant frequency search in the vertical axis is required if it can be shown that no resonant frequencies exist below 33 Hz in the vertical direction.

White noise may be used in lieu of the sine sweep, provided damping is found and the amplitude of the white noise input is not less than 0.25*g* and the test time in seconds is $T = 8/(fn \times z)$ or greater, where *fn* is the lowest natural frequency and *z* is the fraction of critical damping expressed numerically (not in %). Curve fitting should be used with no spectral smoothing.

Many types of substation equipment have, for a given direction, a mode shape that significantly predominates movement when subjected to the RRS. Such equipment types may lend themselves to the determination of fundamental frequencies by either of the methods outlined here:

a) *Snapback test*. In the axis of interest, the equipment (which is firmly restrained in its in-service configuration) is deflected by a load that is judged safe but significant. The load is then suddenly removed such that the equipment is free to oscillate. Measurements of the oscillation will give frequency information.

b) *Man-shake test*. For some equipment, deflections can be noted (without instrumentation) at a level of loading that can be exerted by a human. In such cases, it is possible to manually input periodic loading such that significant deflections are achieved. When large defections are attained, it is possible to cease inputs and measure the resulting oscillations to obtain frequency information.

Copyright © 2006 IEEE. All rights reserved.

--`,,```,,,,````-`-`,,`,,`,`,,`---

Copyright The Institute of Electrical and Electronics Engineers, Inc.
Provided by IHS under license with IEEE
No reproduction or networking permitted without license from IHS
Not for Resale

In addition to obtaining frequency information, these tests can also give damping information through the method outlined in item a) of A.1.1.3.

For RRS testing, a resonant frequency search shall be conducted as the first and last test on the shake table. The first test is conducted to determine the natural frequencies of the test specimen. The last resonant frequency search test is used to determine whether there is a significant change. A change of more than 20% in the resonant frequencies as a result of qualification testing will be used only as one parameter to determine whether there are structural changes and the significance of the changes.

A.1.2.2 Time history shake-table test

Composite insulators and bushings shall be tested according to the requirements of A.1.2.5.

A.1.2.2.1 Requirements for input motion for testing

The equipment and supporting structure shall be subjected to at least one time history test. The input motion time history shall satisfy the requirements given below. This recommended practice principally uses response spectra to establish the characteristics of the time histories used to seismically qualify substation equipment. When taken alone, it is an imprecise method of specifying excitation motions. A time history may be such that its response spectrum envelops the RRS, but the energy content in certain frequency ranges will be low, so that equipment that has important natural frequencies in that range may not be adequately excited. This result can occur because of the design of the time history or the interaction of the equipment and the shake-table that is exciting it. There is a need to balance the concern that the equipment be adequately excited, with the desire to avoid over-testing equipment during its qualification. Although imposing a power spectral density requirement on the input time history can assure an acceptable distribution of energy over the frequency range of interest, this has proved problematic in attempting to address this issue (Kennedy [B24]). If the response spectrum of a time history is reasonably smooth, a reasonable distribution of the energy in the record is also assured (Kennedy [B24]). To avoid over-testing, the TRS is permitted to dip slightly below the RRS, with appropriate limitations.

The lowest permissible resolution (i.e., maximum permissible spacing between frequency points) of calculated response spectra is specified to provide consistency in the enveloping procedure between different tests, and prevent deviations in the spectra that may be masked by the use of too coarse a resolution. When calculating response spectra, the 1.1 Hz frequency point shall be used in all cases, and additional frequency points are developed from this starting point, according to the stated resolution limits. The maximum permissible spacing of frequency points, which is specified in terms of a fraction of an octave (frequency interval between a frequency f and 2 f), is defined by the following:

$$f_{i+1} / f_i = 2^{1/n}$$

where

f_i is the ith frequency point
n is the number of divisions per octave

In the following, a distinction is made between theoretical motions and table output motions. Theoretical motions refer to input motions developed by a variety of software packages and used as input to the shake table. Table output motions refer to motions that are measured from instruments mounted on the shake-table platform.

All theoretical and table output motions cited below refer to accelerations or signals that ultimately will be evaluated as accelerations.

High amplitude cycle count requirements are intended to provide assurance that the input motion provides sufficient cyclic excitation of single-degree-of-freedom oscillators over a wide frequency range. The strong

Copyright © 2006 IEEE. All rights reserved.

Copyright The Institute of Electrical and Electronics Engineers, Inc.
Provided by IHS under license with IEEE
No reproduction or networking permitted without license from IHS
Not for Resale

part ratio requirement provides some assurance that the energy contained in the input motion is distributed in a manner similar to large historic earthquakes:

a) Spectral matching. The theoretical response spectrum developed for testing shall envelop the RRS according to the requirements of this section. When the high seismic level is specified, the RRS shown in Figure A.1 shall be used. When the moderate seismic level is specified, the RRS shown in Figure A.2 shall be used. Spectral acceleration shall be plotted on a linear scale, in all response spectra plots used for the purpose of demonstrating conformance to the spectral matching requirements.

   The theoretical response spectrum for testing shall be computed at 2% damping, at the resolution stated, and shall include the lower corner point frequency of the RRS (1.1 Hz), for comparison with the RRS.

b) Duration. The input motion shall have a duration of at least 20 s of strong motion. Acceleration ramp-up time and decay time shall not be included in the 20 s of strong motion. The duration of strong motion shall be defined as the time interval between when the plot of the time history reaches 25% of the maximum amplitude to the time when it falls for the last time to 25% of the maximum amplitude.

c) Theoretical input motion. The spectrum matching procedure should be conducted at 24 divisions per octave resolution or higher and result in a theoretical response spectrum that is within ±10% of the RRS at 2% damping.

d) Filtering limits. The theoretical input motion record used for testing may be high-pass filtered at frequencies less than or equal to 70% of the lowest frequency of the test article, but not higher than 2 Hz. The lowest frequency of the test article shall be established by test.

e) Filtered theoretical input motion to table. The response spectrum of the filtered table input motion shall envelop the RRS within a –5%/+30% tolerance band at 12 divisions per octave resolution or higher. A –5% deviation is allowed, provided that the width of the deviation on the frequency scale, measured at the RRS, is not more than 12% of the center frequency of the deviation, and not more than five deviations occur at the stated resolution. Exceedance of the +30% tolerance limit is acceptable with concurrence of the equipment manufacturer. Exceedance of the stated upper tolerance limit at frequencies above 15 Hz is generally not of interest, and should be accepted, unless resonant frequencies are identified in that range.

   The filtered input motion to the table shall include at least 2 and a maximum of about 25 high amplitude cycles of an SDOF oscillator response at 2% damping. A “high amplitude cycle” is a cycle defined by ASTM E1049-97 [B3], which consists of two positive or negative peaks of the same range with a peak of opposite sign between them, having an amplitude greater than or equal to 70% of the maximum response of the SDOF oscillator. SDOF oscillators in the frequency range from 0.78 Hz to 11.78 Hz shall be included, and oscillator frequencies shall be selected with 12 divisions per octave band resolution. The minimum number of high amplitude cycles is permitted to drop to 1 at no more than 5 frequency points in the specified frequency range. The number of high amplitude cycles may exceed the stated maximum value with concurrence of the equipment manufacturer. An executable for computing the number of high amplitude cycles can be obtained from the e-mail address 693-th@ieee.org. A detailed explanation of this requirement is given in Takhirov et al. [B26].

   The strong part ratio of the table input motion record shall be at least 30%. The “strong part ratio” of a given record is defined as the ratio of the time required to accumulate from 25% to 75% of the total cumulative energy of the record, to the time required to accumulate from 5% to 95% of the total cumulative energy of the record, where

$$\text{Cumulative Energy} = \int a^2(\tau)\,d\tau$$

$a(\tau)$ = acceleration time history

Copyright © 2006 IEEE. All rights reserved.

--`,,```,,,,````-`-`,,`,,`,`,,`---

Copyright The Institute of Electrical and Electronics Engineers, Inc.
Provided by IHS under license with IEEE
No reproduction or networking permitted without license from IHS
Not for Resale

f) Table output motion. The table output TRS shall envelop the RRS within a –10%/+50% tolerance band at 12 divisions per octave resolution or higher. A –10% deviation is allowed, provided that the width of the deviation on the frequency scale, measured at the RRS, is not more than 12% of the center frequency of the deviation, and not more than five deviations occur at the stated resolution. Over-testing that exceeds the +50% limit is acceptable with concurrence of the equipment manufacturer. Exceedance of the stated upper tolerance limit at frequencies above 15 Hz is generally not of interest and should be accepted, unless resonant frequencies are identified in that range.

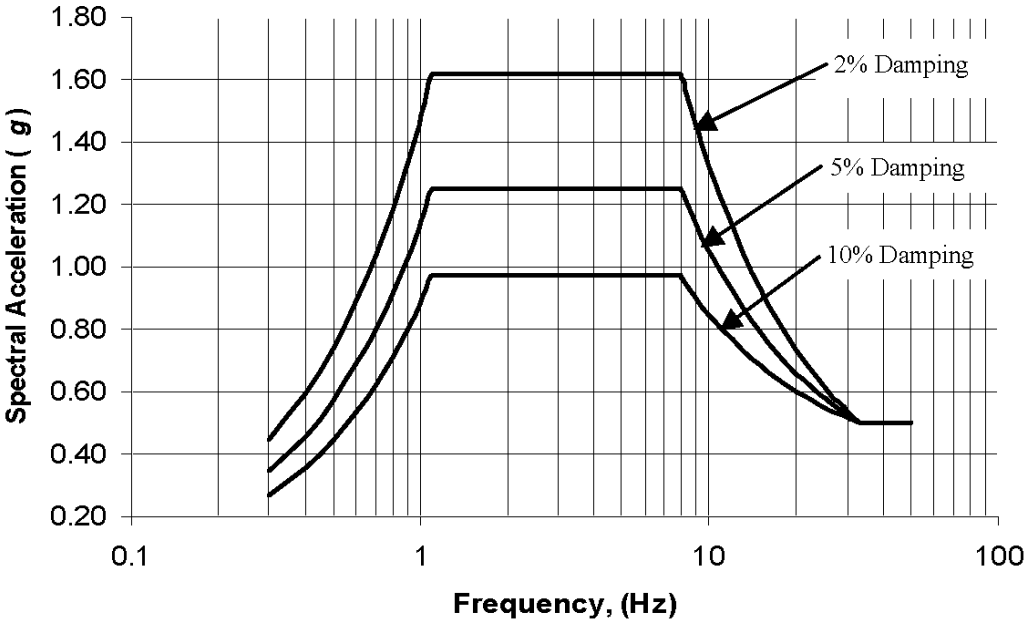

Spectral Accelerations, $S_a(g)$, for Frequencies, f(Hz):

$S_a = 1.144\,\beta f$ for $0.0 \le f \le 1.1$

$S_a = 1.25\,\beta$ for $1.1 \le f \le 8.0$

$S_a = (13.2\,\beta - 5.28)/f - 0.4\,\beta + 0.66$ for $8.0 \le f \le 33$

$S_a = 0.5$ for $f > 33$

$\beta = (3.21 - 0.68 \ln(d))/2.1156$, where d is the percent damping (2, 5, 10, etc.) and $d \le 20\%$.

Figure A.1—High required response spectrum, 0.5*g*

Copyright © 2006 IEEE. All rights reserved.

Copyright The Institute of Electrical and Electronics Engineers, Inc.
Provided by IHS under license with IEEE
No reproduction or networking permitted without license from IHS
Not for Resale

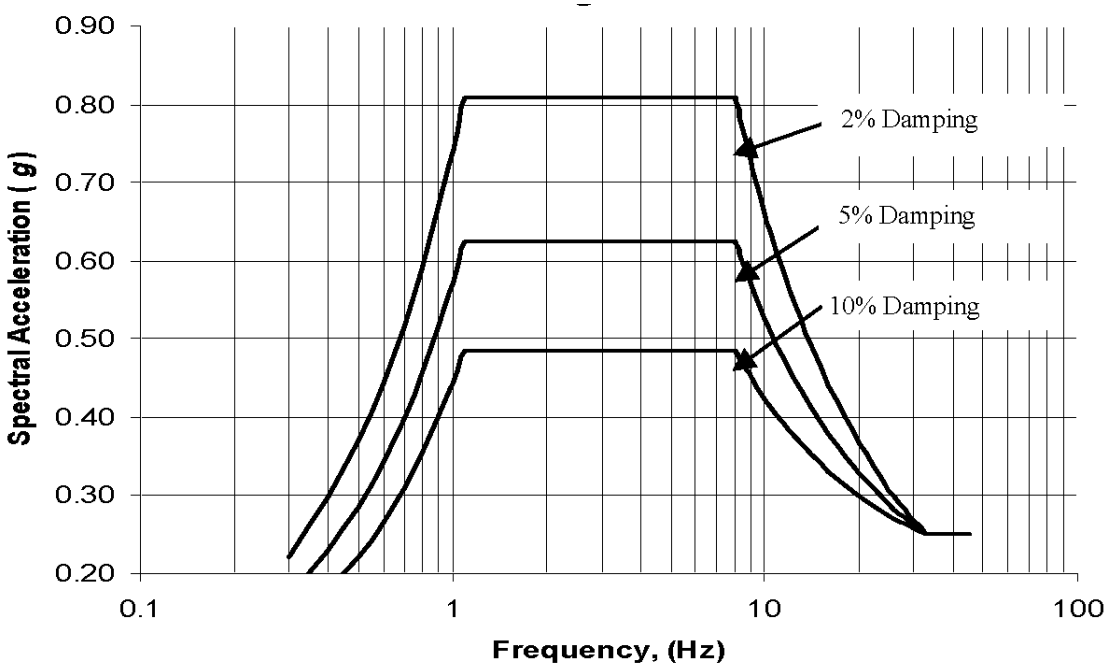

Spectral Accelerations, S_a (g), for Frequencies, f (Hz):

$S_a = 0.572\,\beta f$ for $0.0 \le f \le 1.1$

$S_a = 0.625\,\beta$ for $1.1 \le f \le 8.0$

$S_a = (6.6\,\beta - 2.64)/f - 0.2\,\beta + 0.33$ for $8.0 \le f \le 33$

$S_a = 0.25$ for $f > 33$

$\beta = (3.21 - 0.68 \ln(d))/2.1156$, where d is the percent damping (2, 5, 10, etc.) and $d \le 20\%$.

Figure A.2—Moderate required response spectrum, 0.25*g*

A.1.2.2.2 Pre-approved input motions for testing

In lieu of developing a set of input motions for the time history test, the user may apply one of the following options:

a) Empirically based input motion is available at the e-mail address 693-th@ieee.org. This input motion satisfies the specified requirements of this recommended practice. The empirically based input motion consists of three components of motion specified as acceleration time histories. Two filtered versions of the input motion are also available at the e-mail address 693-th@ieee.org.

b) Random input motion is available at the e-mail address 693-th@ieee.org. This input motion satisfies the specified requirements of this recommended practice in the frequency range above 1 Hz. The random input motion consists of three components of motion specified as acceleration time histories.

Copyright © 2006 IEEE. All rights reserved.

Copyright The Institute of Electrical and Electronics Engineers, Inc.
Provided by IHS under license with IEEE
No reproduction or networking permitted without license from IHS
Not for Resale

A.1.2.3 Sine beat test

The test shall be conducted in two stages:

a) *Stage 1—Resonant frequency search*. A resonant frequency search as specified in A.1.2.1 shall be conducted just before the sine beat test (stage 2) and predominant frequencies are determined.

b) *Stage 2—Sine beat test*. A sinusoidal beat motion consisting of a sinusoid of the equipment resonant frequencies modulated by a lower frequency sinusoid that provides at least 10 cycles of resonant frequency per beat shall be applied to the equipment and supports. There shall be a minimum of five such beats of resonant frequency, with a pause between bursts long enough so that there will be no significant superposition of motion. The 10 cycle sine beat test shall be performed at the predominant resonant frequencies found in stage 1, once in each of the three orthogonal axes. Sine beat testing shall be run at the specified input value in the horizontal axes, each simultaneously and in phase with 80% of the specified value in the vertical axis at the predominant frequencies found in the horizontal directions. Sine beat testing shall also be run at 80% of the specified value in the vertical axis at the predominant frequencies found in the vertical axis. If no predominant frequencies are found in the vertical axis below 34 Hz, then no test will be required for the vertical direction.

When the high seismic level is specified, the input value shall be 0.5*g*. When the moderate seismic level is specified, the input value shall be 0.25*g*.

The following guidelines are only for selecting the predominant frequencies. Unless the equipment is complex, it is usually sufficient to test no more than three or four of the most predominant frequencies in any direction. The amplification at a predominant frequency is usually 2 or greater.

If no resonant frequency is found in a horizontal axis, a test at 33 Hz shall be performed in that axis.

Composite insulators and bushings shall be tested according to the requirements of A.1.2.5.

A.1.2.4 Static pull test

The static pull test shall consist of pulling at the top of the equipment in the direction that provides the most severe loading with a load that is two times the operating weight of the equipment. This load shall be applied for a minimum of 1 minute. Oil-filled gasketed equipment shall be pressurized to a minimum of 10 psig. Composite insulator and bushing test

A.1.2.5 Composite insulator and bushing test

Composites do not require strain gauges or stress measurements, except at the points of maximum stress on the metal end fitting.

Insulators and bushings of composite construction may require additional auxiliary tests to fulfill the acceptance criteria established in item b) of A.2.1.

See Figure A.3 for an example of a single-column cantilever and multiple- and non-cantilever composite insulators.

Copyright © 2006 IEEE. All rights reserved.

Copyright The Institute of Electrical and Electronics Engineers, Inc.
Provided by IHS under license with IEEE
No reproduction or networking permitted without license from IHS
Not for Resale

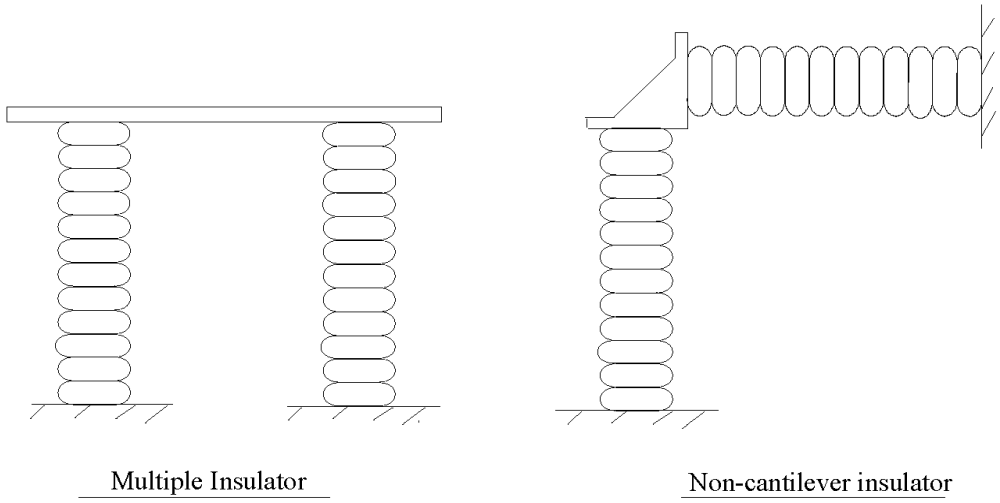

Figure A.3—Example of multiple insulator and non-cantilever insulator

A.1.2.5.1 Single-column cantilever composite insulator(s) and bushing load test

Single columns include insulators and bushings "stacked" one on top of another.

The single-column cantilever composite load test is applicable to any equipment that uses a single composite insulator or bushing.

Before the shake-table tests and again after the qualification testing, a horizontal static load of 50% of the specified mechanical load for the insulator or bushing shall be applied at the top of the insulator or bushing in the front–back and side–side directions. The peak relative deflection shall be measured as defined below. The load shall be removed. The above procedure shall be repeated at least two more times for insulators with crimped metal end fittings and the deflections averaged.

The deflections shall be measured between the top of the composite and the base of the composite. Rotation at the base may be excluded. These deflections can be measured directly or inferred by strain measurements obtained from the lower flange of the insulator. The factor to convert strain to top deflection can be obtained from initial pull test data. Integration of accelerations at the top of the device is not acceptable unless their validity can be substantiated.

Damping shall be measured in snapback tests in the front–back and side–side directions before and again after shake-table testing. In the snapback tests, the load at release shall be at least three eighths of the SML.

A.1.2.5.2 Multiple-insulator or non-cantilever composite insulator and bushing test

The multiple-insulator or non-cantilever composite polymer test is applicable to any equipment that uses composite insulators that are not described by A.1.2.5.1.

Copyright © 2006 IEEE. All rights reserved.

--`,,```,,,,````-`-`,,`,,`,`,,`---

Copyright The Institute of Electrical and Electronics Engineers, Inc.
Provided by IHS under license with IEEE
No reproduction or networking permitted without license from IHS
Not for Resale

It may not be possible to perform the static load test as described in A.1.2.5.1 if there are multiple insulators in parallel or insulators that take moment at both ends (insulator in double curvature). In such cases, the appropriate method below shall be performed (only one of the following need be performed):

a) *Method 1—For any case:* Static load tests are not required for this method. The time history shall be performed at twice the specified level, and the sine beat shall be performed at 1.2 times the specified level. If this alternative is chosen, stresses need not be monitored. Monitoring of accelerations and deflections shall remain unchanged.

b) *Method 2—For composites primarily in bending:* The static load tests shall be performed as defined in A.1.2.5.1; except instead of the load being applied at the top of the insulator or bushing, it shall be applied at the top of the equipment assembly. Strain bolt(s) shall be installed at the tension side of the metal end fittings of bending insulators. As the equipment assembly is pulled laterally, the SML shall be determined by measuring the stresses in a strain bolt(s) and calculating the equivalent SML load applied at the inflection point of the insulator(s). The resulting deflections of the equipment assembly shall be averaged as discussed in A.1.2.5.1.

c) *Method 3—For composites primarily in tension or compression:* The static load tests shall be performed as defined in A.1.2.5.1; except instead of the load being applied at the top of the insulator or bushing, it shall be applied at the top of the equipment assembly. Strain bolt(s) shall be installed at the bottom metal end fitting.

A.1.3 Analytical qualification

A.1.3.1 Static analysis

The forces on each component of the equipment shall be obtained by multiplying the values of the mass of the component by the acceleration specified in the principal directions. The resulting force shall be applied at the center-of-gravity of the component. A part may be subdivided into smaller components, to better represent the part's mass distribution.

The vertical seismic forces shall act simultaneously with both horizontal seismic forces. The horizontal forces are applied in the direction of the orthogonal axes. The three forces at each component's center-of-gravity shall be applied using the SRSS method, applied in the direction that produces the most severe equipment stresses, and then combined with dead load stresses and any normal operating stresses.

When the high seismic level is specified, the static analysis shall use 0.5*g* in the two horizontal directions and 0.4*g* in the vertical direction. When the moderate seismic level is specified, the static analysis shall use 0.25*g* in the two horizontal directions and 0.2*g* in the vertical direction.

The following is an acceptable way of performing the static analysis:

a) *Develop free-body diagrams.*

   1) Divide the load path (i.e., the route the loads follow through the equipment to the foundations) for the equipment's principal axes into free-body diagrams

   2) Label resultant forces and applied loads in each free-body diagram. Labels shall be consistent throughout all free-body diagrams (Figure A.4).

   3) Analyze each free-body diagram, starting with the free end mass and propagate the loads until they reach the foundation.

b) *Calculations or information needed for each free-body.*

   1) Section properties of all structural members in the free-body.

   2) Provide all necessary dimensions.

   3) Provide all necessary loads/weights.

Copyright © 2006 IEEE. All rights reserved.

Copyright The Institute of Electrical and Electronics Engineers, Inc.
Provided by IHS under license with IEEE
No reproduction or networking permitted without license from IHS
Not for Resale

4) Model the structure and loads.

5) Determine stresses/loads/moments/deflections as necessary for all structural members. Combine the loads in the x, y, and z directions, as needed, for "actuals."

6) Determine allowable/permissible values for all structural members.

c) *Compare allowables to actuals.*

See Figure A.4 for an example.

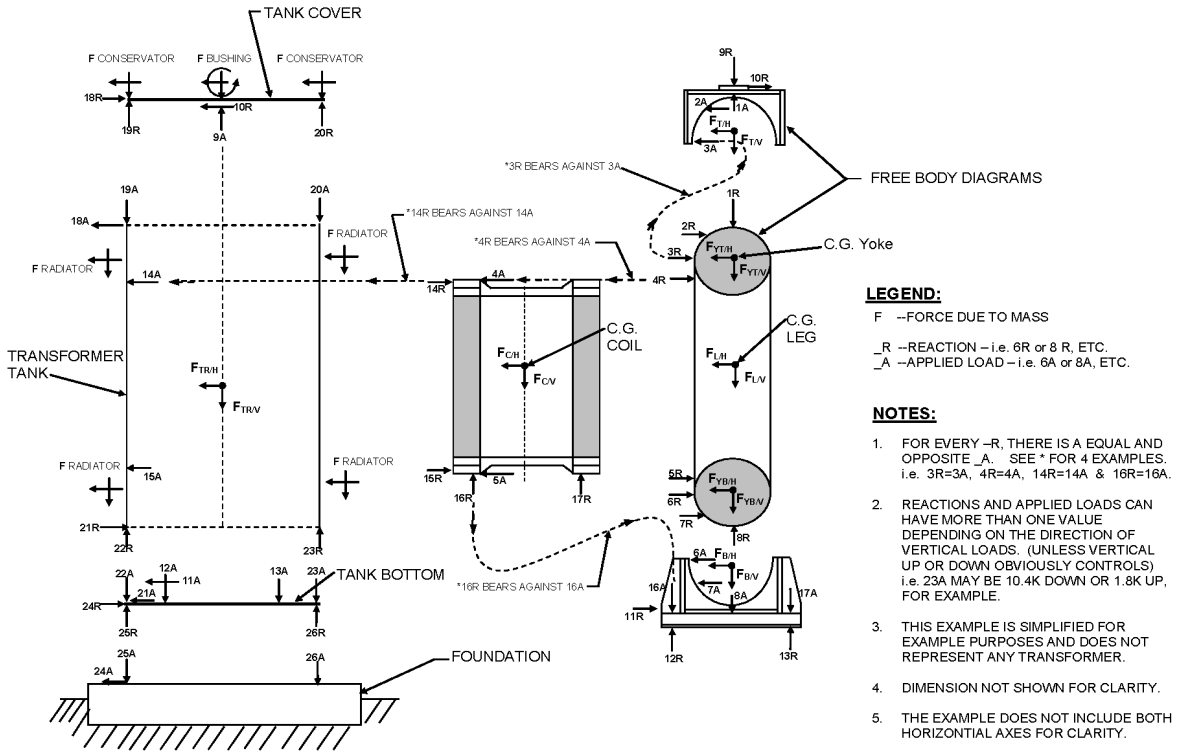

Figure A.4—Example of free-body diagrams in load path

A.1.3.2 Static coefficient method

The acceleration response of the equipment shall be determined using the maximum peak of the RRS at a damping value of 2%, unless a higher value for damping is justified by a test specified in A.1.1.3. The seismic forces on each component of the equipment are obtained by multiplying the values of the mass times the maximum peak of the RRS times the static coefficient. A static coefficient of 1.5 shall be used, unless otherwise noted herein, with 80% of the horizontal value being applied in the vertical axis. The resulting force shall be distributed over the components in a manner proportional to its mass distribution. The stress at any point in the equipment shall be determined by combining the three orthogonal directional stresses (at that particular point) by the SRSS method at that point and combining all dead and normal operating stresses in such a manner to obtain the greatest stress at the point. The points of maximum stress shall be found.

When the high seismic level is specified, the spectrum given in Figure A.1 shall be used. When the moderate seismic level is specified, the spectrum given in Figure A.2 shall be used.

Copyright © 2006 IEEE. All rights reserved.
--`,,``,,,,````-`-`,,`,,`,`,,`---

Copyright The Institute of Electrical and Electronics Engineers, Inc.
Provided by IHS under license with IEEE
No reproduction or networking permitted without license from IHS
Not for Resale

A.1.3.3 Dynamic analysis

Using dynamic analysis, the equipment and any support structure shall first be modeled as an assemblage of discrete structural elements interconnected at a finite number of points called nodes. The number, location, and properties of elements and nodes shall be such that an adequate representation of the modeled item(s) is obtained in the context of a seismic analysis. The resulting system is called a finite element model.

The finite element model shall be dynamically analyzed using a "modal spectrum analysis," as described, for example, by Chopra [B7] and Gupta [B11]. In general, the modal responses of the finite element model to the dynamic analysis shall have three translational and three rotational components in and about the defined orthogonal axes system. Certain shell and solid elements may have inactive rotational degrees of freedom. The total response of all modes in any direction shall be determined by combining all modal response components acting in that direction using the SRSS technique, except if the mode frequencies differ by less than 10% of the lower mode, then these closely spaced modes are added directly and these added modes and the remaining modes are added using the SRSS method. Alternatively, the total response in any direction may be determined by applying the CQC technique to all modal response components acting in that direction.

Sufficient modes shall be included to ensure an adequate representation of the equipment's dynamic response. The acceptance criteria for establishing sufficiency in a particular direction shall be that the cumulative participating mass of the modes considered shall be at least 90% of the sum of effective masses of all modes. The acceptance criteria shall be applicable to the directions of orthogonal excitation and those response directions deemed significant, as determined by the specialist and the user, for the particular type of equipment being analyzed.

Should the finite element model have several resonant frequencies above 33 Hz such that the attainment of the acceptance criteria in an orthogonal excitation direction is impractical (as may be the case with vertical ground acceleration of vertically stiff equipment), then the effects of the orthogonal inputs can be simulated as follows:

a) Determine the remaining effective mass in a given direction.

b) For each component, apply a static force equal to the mass of the component times the percentage of mass missing times the ZPA.

c) Calculate stresses, reactions, and so on using these forces.

d) For each direction, combine stresses, reactions, and so on from the dynamic analysis with those from the analysis above using the SRSS.

When the high seismic level is specified, the spectrum given in Figure A.1 in A.1.2.2.1 shall be used. When the moderate seismic level is specified, the spectrum given in Figure A.2 in A.1.2.2.1 shall be used.

A damping value of 2% or less shall be used for dynamic analysis, unless a higher damping value is justified by one of the tests specified in A.1.1.3.

Testing may be done to provide data for the analysis.

Discrete parts of the equipment may be tested independently of the overall equipment. If testing is done to qualify parts of the equipment, the input acceleration, at the mounting point of the part, shall be increased to account for the amplification of the intermediate parts between the base acceleration and the mounting point. The increase in acceleration may be determined by analysis or testing.

A.1.3.4 Load path

The load path shall be identified. The load path is the route the loads follow through the equipment to the foundations.

Copyright © 2006 IEEE. All rights reserved.

Copyright The Institute of Electrical and Electronics Engineers, Inc.
Provided by IHS under license with IEEE
No reproduction or networking permitted without license from IHS
Not for Resale

The load path shall not include the following:

a) Sacrificial collapse members.

b) Materials that will undergo non-elastic deformations, unrestrained translation, or rotational degrees of freedom.

c) Solely friction-dependent restraint (control energy dissipating devices excepted).

A.1.4 Inherently acceptable

Neither a seismic report, a nameplate, nor a seismic outline drawing as defined in Annex A is required. However, calculations that demonstrate the following anchorage requirements shall be provided to the user or user's agent. The equipment anchorage shall be capable of withstanding at least 1.0 times the equipment weight applied in one horizontal direction combined with 0.8 times the weight applied in the vertical direction at the center of gravity of the equipment and support. The resultant load shall be combined with the maximum normal operating load and dead load to develop the greatest stress on the anchorage. Both orthogonal directions shall be checked, and the greatest stresses shall be used in the design of the anchorage. The anchorage shall be designed according to the requirements of A.4.2.

A.2 Acceptance criteria

The seismic qualification will be acceptable if the appropriate criteria in A.2.1 through A.2.5 are met.

A.2.1 General

Where appropriate, this recommended practice recognizes both ASD and LRFD design methodologies. The load combinations to be used for ASD and LRFD methods shall be as follows:

$$ASD = 1.0\,D + 1.0\,E_{RSS} + 1.0\,OP \tag{7}$$

$$LRFD = 1.2\,D + 1.4\,E_{RSS} + 1.0\,OP \tag{8}$$

$$LRFD = 0.9\,D + 1.4\,E_{RSS} + 1.0\,OP$$

Use the more critical of the two equations of Equation (8) for LRFD, where

D is the dead load

E_{RRS} is the earthquake load demand from the RRS (service load)

OP is the normal operating load (see Definition 3.1.16)

The total load/stress found shall not exceed the allowable load/stresses. Allowable load/stress shall be as follows, except as modified in A.2.4 and A.2.5:

a) *Porcelain.* Porcelain loads/stresses shall not exceed 50% of the ultimate load/stress of the porcelain.

b) *Composite*. The use of composite material shall meet the following criteria:

1) Composite insulators shall:

i) Not exceed 50% of the stress developed at the SML of the composite when analyzed.

ii) Meet the requirements of Composite Polymer Test (A.1.2.5) when tested.

iii) Meet the requirements of the Composite Polymer Shed Seal Test (A.4.4).

Copyright © 2006 IEEE. All rights reserved.

Copyright The Institute of Electrical and Electronics Engineers, Inc.
Provided by IHS under license with IEEE
No reproduction or networking permitted without license from IHS
Not for Resale

iv) Meet the following maximum allowable deflection limitations for RRS time history tested or dynamically analyzed bushings or insulators:

— 21 cm (8 in) for 138 kV to 230 kV

— 26 cm (10 in) for greater than 230 kV to 361 kV

— 31 cm (12 in) for greater than 361 kV to 500 kV

— 46 cm (18 in) for greater than 500 kV to 800 kV

as measured at the top of the insulator or bushing from the base of the bushing or insulator, excluding deflections or rotations of the base support.

The user is cautioned that these limits will yield extreme displacements. The user must check actual equipment deflections to verify that the recommendations of 5.9 can be met.

If testing is to the performance level, the above deflection limits may be doubled.

2) All other composite materials shall meet the requirements of item f) or item g) of A.2.1.

c) *Steel.*

1) *ASD.* Stresses in steel shall not exceed the appropriate allowable stress defined in the latest edition of the AISC Manual of Steel Construction, Allowable Stress Design.

2) *LRFD.* Structural steel elements shall be designed in accordance with the AISC Manual of Steel Construction, LRFD Specification.

d) *Aluminum.*

1) *ASD.* Aluminum shall not exceed the appropriate allowable stress defined in the latest edition of the Aluminum Association's Aluminum Design Manual. Allowable stress shall be as given in Part 1A. Substation structures shall be classified as "Bridge and similar type structures." Increases for allowable stress caused by seismic loads shall not be permitted.

2) *LRFD.* The LRFD design specifications given in Part IB of the Aluminum Association's Aluminum Design Manual are derived from nominal resistances that have been calibrated against "Building and similar type structures" criteria. Consequently the specifications given in Part IB are inconsistent with the objectives of the current IEEE Std 693 (refer to 8.2) and should not be used.

To use the LRFD method, the user must do an appropriate calibration in a manner consistent with Part IIB of the Aluminum Design Manual. Nominal resistances shall be derived from the "Bridge and similar type structures" criteria given in Part 1A.

e) *Unreferenced steel and aluminum*. Structural steel or aluminum not specified in the references given in item c) or item d) may be used providing all of the following conditions are met:

1) The material is not used in a bolted fastener.

2) The physical properties of the material are documented to the extent that all data required for the application of the relevant formulae of the references exist.

3) The material meets the acceptance criteria of the appropriate references given in either item c) or item d).

f) *Other materials covered by code*. Recognized applicable codes that are appropriate for use with this recommended practice may be used for materials not covered in item a) through item d) of this subclause.

Copyright © 2006 IEEE. All rights reserved.

Copyright The Institute of Electrical and Electronics Engineers, Inc.
Provided by IHS under license with IEEE
No reproduction or networking permitted without license from IHS
Not for Resale

g) *Other materials*. Any structural material other that those mentioned in item a) through item d) of this subclause and not covered by an existing acceptable code shall only be used when the following criteria is met:

   1) When the complete material and structural properties of the material are documented to the satisfaction of the user and specialist in writing (4.1).

   2) When the material is classified as being brittle (refer to Definition 3.1.4), then the material stress must be compared with one of the following and shown to not exceed that value:

      i) 50% of the materials ultimate load/stress.

      ii) 50% of the yield strength when the yield strength is determined from 0.2% offset.

      iii) 50% of the force or strength factor determined from a static test of non-ductile components (refer to A.4.3)

   3) When a material is classified as ductile (refer to Definition 3.1.7), then the material stress must not exceed 50% of the yield stress and must have a factor of safety against buckling of 1.7.

h) *Oil-filled bushings*. Shake-table tested oil-filled bushings shall not leak when testing to the performance level. If equipment is tested to the RRS level, then in addition to the criteria specified in item a) through item f), the tested stress/load shall not exceed 50% of the leakage stress/load. The leakage stress/load shall be taken as the maximum stress/load on a component before the onset of leakage.

i) *Components with complex geometry*. The value of the critical variable applied during static test shall be at least twice that observed during shake-table tests at the RRS (A.3).

A.2.2 Test: general

Equipment and support shall not fail, crack, buckle, or show any other permanent distress.

A.2.2.1 Functionality test

The specified functions of the equipment shall be checked before and after the shake-table testing. The test will be acceptable if, after the test, the equipment continues to perform its intended functions as defined in the applicable annex. If demonstration of correct functions during the shake-table test has been specified, then the test will be considered acceptable if the equipment has performed the functions successfully within the accepted limits set down for these functions.

A.2.2.2 Porcelain insulators and bushings

Stresses determined from strain gauge measurements shall be computed by using the mean modulus of elasticity (E) of porcelain for the type of component being qualified. The original equipment manufacturer shall certify that the modulus of elasticity data was obtained by recognized test methods.

A.2.2.3 Composite insulators and bushings

A.2.2.3.1 Single-column cantilever composite polymer load test

The composite load test will be acceptable if the difference in the relative deflections from the pull tests in the front–back and side–side directions after the vibration tests do not increase by over 15% from the original test.

Copyright © 2006 IEEE. All rights reserved.

Copyright The Institute of Electrical and Electronics Engineers, Inc.
Provided by IHS under license with IEEE
No reproduction or networking permitted without license from IHS
Not for Resale

A.2.2.3.2 Multiple-insulator or non-cantilever composite polymer test

a) *Method 1—For any case.* The composite and metal end fitting shall not fail, crack, buckle, retain a permanent deflection, or show any other permanent distress. Stresses in anchor bolts or welds shall not exceed yield.

b) *Method 2—For composites in bending.* The requirements of A.2.2.3.1 shall be met.

c) *Method 3—For composites in tension or compression.* The tension or compression in the composite shall be calculated and compared with the tensile allowable or compression allowable or the buckling loads, as applicable.

A.2.2.4 Gasketed assemblages

Equipment with gaskets shall not suffer from leakage, obvious permanent movement of the gasket, or permanent movement relative to the gasket.

A.2.3 Time history test(s)

The time history test will be acceptable if the requirements of A.2.1 or A.2.2 are met.

A.2.4 Sine beat test(s)

The sine beat history test will be acceptable if the following requirements are met:

a) A.2.1, except that all allowable loads/stresses may be multiplied by a factor of 1.8, when ASD methods are used. When LRFD methods are used for structural steel, a load factor of 1.0 may be used.

b) A.2.2 may be multiplied by a factor of 1.8.

A.2.5 Static pull test

The static pull test will be acceptable if the equipment and support do not fail, crack, slip, buckle, or show any other permanent distress. For bushings, there shall be no oil leakage before or after the pull test.

A.2.6 Test performance level

In lieu of the acceptance requirement of A.2.1 through A.2.4, the following may be used:

a) Insulating components, including porcelain and their end fittings or composite polymers and their end fittings, shall not crack, slip, leak, or otherwise fail. The permanent deformation of composite polymers must be less than 5% of peak defection.

b) Metal parts shall not fail. However, metal parts and composite parts may elongate or bend slightly provided the damage does not affect the function of the equipment.

c) The functional test requirements of A.2.2.1 shall remain unchanged.

In lieu of monitoring requirements specified in A.2.8 and Annex B through Annex P, monitoring of stresses on ductile components may be omitted, except monitoring requirements for accelerations and displacements shall remain unchanged.

In lieu of the requirement of A.4.2 Anchorage to concrete, which states that “Stresses/loads for anchor bolts or welds shall be as specified in A.2.1, unless qualification is by sine beat in which case a 1/3 increase is allowable,” the following may be used: “Stresses in anchor bolts or welds shall not exceed yield.”

Copyright © 2006 IEEE. All rights reserved.

Copyright The Institute of Electrical and Electronics Engineers, Inc.
Provided by IHS under license with IEEE
No reproduction or networking permitted without license from IHS
Not for Resale

If LRFD methods are used for steel anchorage elements, the following may be used in lieu of the requirements of A.4.2:

a) Use AISC LRFD specification load combinations containing earthquake load, except replace earthquake load term (1.0 E) by 1.0 EPL where EPL is the earthquake load demand from the performance level test.

b) Embedments in concrete should be designed according to requirements of the ASCE Substation Structure Design Guide, using the same load combinations specified for structural steel by the LRFD method, as modified above.

See 4.6.7 for additional information regarding testing at the performance level.

A.2.7 Analysis

The analysis will be acceptable if the requirements of A.2.1 are met.

A.2.8 Monitoring of shake-table testing

The following monitoring requirements shall be met:

a) Strain gauges (porcelain): The highest stressed porcelain insulator shall have a minimum of two strain gauges located 90 degrees apart at the base of the porcelain. The highest stressed column shall have a minimum of two strain gauges located 90 degrees apart at the base of the column. The column gauges should be located 5 cm to 8 cm (2 in to 3 in) above stiffener plates and welds on the principal axes of the column section. Strain gauges shall also be located at other critical points determined in the analysis and in accordance with the appropriate annex.

b) Strain gauges (composites): Strain gauges shall be located at the mid-span on the barrel of the metal end fitting in the direction of the loads.

c) Strain bolts: Strain bolts are recommended, but they are not required.

d) Accelerometers: As a minimum, triaxial accelerometers shall be located on the table, at or close to the center of gravity of the equipment, if possible, at conductor attachment points, at the top of the equipment and the top of the support, and in accordance with the appropriate annex.

A.3 Static testing of components

Static testing of components is a method to determine acceptable loading in lieu of either the stress monitoring, as given in A.2.8, or the stress calculations. The static testing of components is appropriate in the following circumstances:

a) Test qualifications:

   1) Strain gauge/bolt application is not possible due to the inaccessibility of the component in the test configuration (refer to A.1.1).

   2) The component material is incompatible with strain gauge technology.

   3) No appropriate holes for the use of strain bolts.

   4) The presence of complex geometry (e.g., gussets, cutouts, curves, tapered geometry, fastening interfaces, etc.) such that the location of maximum stress is not intuitive.

Copyright © 2006 IEEE. All rights reserved.

Copyright The Institute of Electrical and Electronics Engineers, Inc.
Provided by IHS under license with IEEE
No reproduction or networking permitted without license from IHS
Not for Resale

b) Analytical qualifications:

1) The presence of complex geometry (e.g., gussets, cutouts, curves, tapered geometry, fastening interfaces, etc.) such that the employed engineering theory cannot accurately determine the maximum stress.

2) The material properties data of the component are limited or nonexistent (e.g., unique materials, the use of processes that alter material characteristics to an unknown extent).

The test of the component shall consist of the application of static loads as follows:

a) The component shall be restrained in its in-service configuration (refer to A.1.1).

b) Loads shall be simultaneously and statically applied to the component in the directions of interest. Although the simulation of seismic loads is a triaxial load state, often an axis contributes minimal stress and can be dismissed.

c) If testing is only conducted in one axis at a time, then the load magnitude should be increased 40% unless substantiated by an analysis dictating an alternative factor.

d) The magnitude of loading shall be, as a minimum, at least twice the level of loading projected at the RRS (or the level of loading at the PL) and the provisions in item b).

e) Where practical, it is preferable to test to destruction or permanent yield of the component so that a definitive margin can be established.

f) The level of loading required by item c) and item d) such that the component remains in a state that is in keeping with the aims of the objective (refer to 8.2) shall be called the static component load.

g) It is preferable to conduct multiple tests of the component so that statistical variations can be established for the static component load.

A.4 Design requirements

The equipment, supports, and anchorage shall be designed and constructed according to the following requirements in A.4.1 through A.4.4.

A.4.1 Support frames and anchorages

A.4.1.1 General

The support frames shall be fabricated from steel, aluminum, or other materials allowed by the user or the user's agent. The design, materials, workmanship, fabrication, and detailing of support frames and anchor bolts shall be in accordance with the following, as applicable:

a) The AISC Manual of Steel Construction, ASD

b) The AISI Specification for the Design of Cold-formed Steel Structural Members

c) The Aluminum Association's Aluminum Design Manual, ASD

d) The AISC Manual of Steel Construction, LRFD

If supports are required, erection drawings and shop drawings for support frame components shall be furnished that show member sizes, materials used, dimensions, connection details and welding details, and shall include bills of material. The drawings shall be prepared using standard AWS and AISC symbols.

Support drawings and all copies shall be retained by the user only and not by the user's agent.

Copyright © 2006 IEEE. All rights reserved.

Copyright The Institute of Electrical and Electronics Engineers, Inc.
Provided by IHS under license with IEEE
No reproduction or networking permitted without license from IHS
Not for Resale

A.4.1.2 Deflection criteria

The support frame shall be designed to minimize deflections. The support frame shall be designed such that the top of the frame does not deflect more than as allowed by the ASCE Substation Structure Design Guide. The deflection criteria may be exceeded for suspended equipment. When base isolation is used, the required deflection may be the total deflection minus the deflection of the base isolator.

A.4.2 Anchorage to concrete

All anchorage to concrete assemblies, including welds and anchor bolts, shall be designed for loads resulting from the analysis or from the test. The user will supply and install the anchorage materials, such as anchor bolts, embeds, and welds, unless specified otherwise by the user or the user's agent. If more than one qualification method is used, the one that produces the largest bolt or weld shall be used. Anchor bolts shall comply with the requirements of ASTM A36, ASTM F1554 36, or A307. Anchor bolts shall not be less than 19 mm (0.75 in) in diameter, unless it can be shown that the allowable stresses exceed the applied stresses by not less than a factor of two. Stresses/loads for anchor bolts or welds shall be as specified in A.2.1, unless qualification is by sine beat test; in which case, a one-third increase is allowable.

Anchorage to concrete should be according to ASCE Substation Structure Design Guide.

A.4.3 Structural bolts and steel

Structural bolts, including equipment and support bolts, with an ultimate tensile (minimum) strength of 965 MPa (140 000 ksi) or greater shall not be used.

Structural steel with a yield strength greater than 650 MPa (94 250 ksi) or an ultimate tensile strength of 965 MPa (140 000 ksi) shall not be used, unless approved in writing by the user. Structural bolts 10 mm (0.41 in) and smaller shall not be used unless it can be shown that the allowable stresses exceed the applied stresses by not less than a factor of 1.2. These requirements do not apply to non-structural materials (i.e., material not in the load path).

A.4.4 Composite polymer shed seal test

A shed seal test shall be performed on composite polymer insulators and bushings. This is a test of the ability of the sheath-shed seal to the metal-end fitting to prevent the entrance of moisture into the core or electrical components. Only one test need be performed for each seal design method. This one test applies to all equipment using the tested sealing method. That is, the test need not be repeated for different equipment types or voltage class, whether insulator or bushing, where the same sealing method is used.

A tension line shall be connected to one end of the insulator or bushing with the other end of the insulator or bushing anchored rigidly to produce a moment connection, as shown in Figure A.5. The tension line shall be pulled to produce one half of the SML in the insulator or bushing. The tension shall be held for at least two minutes, and then the interface of the metal end fittings and the shed at the moment end of the insulator or bushing shall be heavily coated or flooded with dye-penetrant. The load shall be removed, and the metal end fittings and insulator shall be cut longitudinally and transversely at the highest stressed areas to determine whether any dye penetrant penetrated beyond the external surface. The test will be considered acceptable if the dye did not penetrate to within 2 mm of the fiberglass core. The test shall be documented in writing by the independent testing laboratory and documented by photographs of each step of testing and the cut pieces, including photographs of the dye covered uncut insulator or bushing and a description of the cut pieces and how they fit into the insulator/metal end fitting.

Copyright © 2006 IEEE. All rights reserved.

Copyright The Institute of Electrical and Electronics Engineers, Inc.
Provided by IHS under license with IEEE
No reproduction or networking permitted without license from IHS
Not for Resale

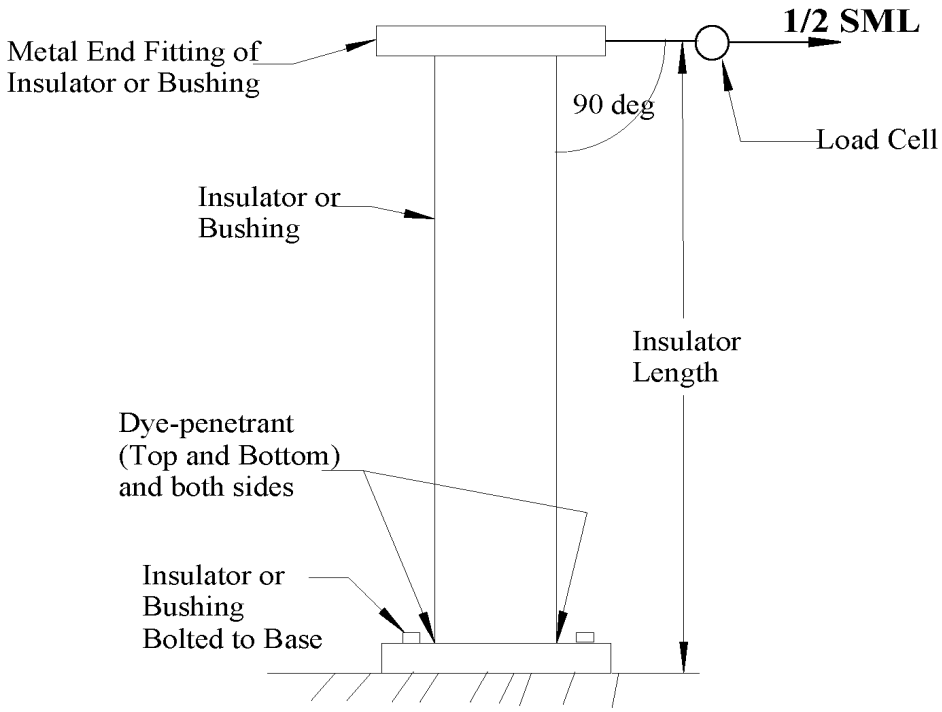

Figure A.5—Composite polymer shed seal test setup

A signed copy of the test results shall be included with the seismic report. The following information shall be provided: the equipment type tested, the voltage class, the results of the functional tests done before and after (and a sketch of the equipment, such as provided in the seismic outline drawing, if requested by the user), and color photographs.

The previous composite polymer shed seal test not meeting the requirements of this clause shall not be grand-fathered as allowed in 1.5.1. Insulators or bushings not meeting this clause shall be tested to these requirements.

A.5 Seismic test-qualification report

A seismic qualification report, including a corrected (as-tested) test plan, shall be prepared and supplied to the user. The report shall be as described in Annex T. The report is to be supplied in two parts. Part 1 shall contain the key information listed in the applicable annexes, including Annex T. Part 2 shall contain the detailed data, charts, and so on that support the key information. The Test Laboratory Report meets the requirements for the second part. The report, test(s), test plan, and all test results, calculations, seismic outline drawing, charts, and records that show compliance with the seismic requirements of this recommended practice shall be approved before issuance to the user by a qualified specialist competent in seismic testing and qualification of electrical equipment. The specialist shall sign the report, test plan, and seismic outline drawing. The specialist shall meet the following requirements:

a) Understands and complies with the applicable requirements of this recommended practice.

b) Provides a report acceptable to the user. An acceptable report provides the data and results required herein, in sufficient detail, which is easily understood, with labeled sketches and charts, organized as described in Annex T, with calculations that meet industry standards of competency.

Copyright © 2006 IEEE. All rights reserved.

Copyright The Institute of Electrical and Electronics Engineers, Inc.
Provided by IHS under license with IEEE
No reproduction or networking permitted without license from IHS
Not for Resale

c) Has had an appropriate and adequate education in seismic testing. (The education may be on-the-job training.)

d) Has had appropriate and adequate experience in preparing electrical equipment seismic testing-qualification reports.

If any of the above requirements are not met, the person will not be considered qualified to sign the above documents.

The following criteria will be considered, but they are not mandatory:

— Holds a valid Civil, Structural, or Mechanical Professional Engineering license.

— Has taught or written papers concerning seismic testing.

— Has directed and signed seismic testing-qualification reports.

The documentation demonstrating compliance with the above requirements shall be provided to the user or the user's agent upon request.

The report shall be supplied to the user or the user's agent in English and in the units required by the user. Should corrections or additions be needed to the initial report, only those pages needing revisions need be corrected and submitted for acceptance. Once agreement of corrections and omissions has been reached, then the entire report shall be resubmitted to the user with the corrections and omissions incorporated in their proper location in the report and the errors removed.

The equipment parameters and variables, which may increase the equipment's vulnerability, shall be defined in the qualification report. Of particular concern are equipment parameters or variables that influence the failure modes. Items such as operating voltages, current rating, BIL, creep length, and rated strengths of porcelain members shall be documented.

A.5.1 Equipment description and test plan

In this subclause, the equipment to be tested is identified and an instrumentation plan, test methods, and test sequence are established. A test plan shall be prepared and approved by the specialist before the test, except in the case of a static pull test. This plan, as a minimum, shall contain the following:

a) *Description of equipment to be tested*. This should include the general description (such as disconnect switch, capacitor voltage transformer), its operating voltage (such as 230 kV), its BIL rating (such as 230 kV), and the rated strength of critical components (such as porcelain insulators or the SML of composite insulators).

b) *Monitoring requirements*. An outline drawing of the equipment showing the proposed locations of the monitoring devices, such as accelerometers and strain gauges using the same transducer numbering system as contained in the shake-table laboratory test report. Add to the bottom of the list other instruments not mounted on the shake table, such as those items used for the pull test needed for composite insulators.

c) *Test method*. Testing to be triaxial or give justification of biaxial testing. See 1.1.

d) *Functional test*. Description of functional tests and where test will be performed.

e) *Qualification level*. The plan shall state the qualification level.

f) *Listing of tests*. The plan shall include a sequence listing of all tests to be performed at the test facility.

See Annex T for an example of a test plan.

Copyright © 2006 IEEE. All rights reserved.

Copyright The Institute of Electrical and Electronics Engineers, Inc.
Provided by IHS under license with IEEE
No reproduction or networking permitted without license from IHS
Not for Resale

The test plan should be reviewed by the witnesses, if any, before the test. See 4.5.

Static load testing does not require a test plan.

A.5.2 Data (shake-table test)

The report shall include the following:

a) Tabulated summary of maximum controlling stresses, loads, and/or defections (f), allowable capacities (F), and their margins, starting in order with the equipment component's smallest (F/f) factor, for the support structure and equipment. The part 2 source page number of the data shall be referenced (see the "Example of the Shake-Table Test—Summary of Maximum Stresses, Loads, etc." in Annex T).

b) Location, telephone number of test laboratory, and date of test.

c) Test engineer's name and title.

d) Description of testing equipment, test method(s), and instrumentation.

e) Photographs showing the test setup and instrumentation location.

f) Sketch showing location of strain gauges and accelerometers.

g) Anchorage of the equipment details and material strength.

h) Serial number of the equipment and equipment components being tested.

i) Resonant frequencies and damping, including resonant frequency search records for pre- and post-test, and supporting calculations.

j) Comparison of the RRS and the TRS.

k) Tabulated list of maximum accelerations, stresses, and displacements at measurement points of all tests, including resonant frequency searches (see "Example of Data Measurement Points" in Annex T).

l) Reactions at base support points and associated calculations.

m) List any anomalies observed, and document any areas of distress or damage.

n) Modifications required to pass the test.

o) List of utility (user) representative(s), if any, who witnessed the testing and which part(s) of the testing was witnessed.

p) Summary data for composites pull tests, including direction (see A.1.2.5).

q) Tabulated list of acceptance criteria allowables and performance values.

r) A picture or graphical reproduction of the identification plate (see A.8).

s) Document justifying the ultimate porcelain strength.

t) Static pull test data for composite insulators and bushings.

u) A calibration list of test laboratory equipment that lists the equipment to be used during the test and the last calibration date.

v) Describe supplemental work (see A.5.4).

w) Pull test results for subsystems with complex geometry (see A.3).

x) Test for seal integrity for composites (see A.4.4).

Copyright © 2006 IEEE. All rights reserved.

Copyright The Institute of Electrical and Electronics Engineers, Inc.
Provided by IHS under license with IEEE
No reproduction or networking permitted without license from IHS
Not for Resale

A video recording of the tests shall be provided with the test report. The video shall be labeled with the following information: equipment type, report number, and date of testing.

A.5.3 Seismic outline drawing (shake-table test)

The supplier shall also include in the report a one page, 280 mm × 432 mm (11 in × 17 in), A3, 216 mm × 280 mm (8½ in × 11 in), or A4 seismic outline drawing of the equipment and any support. The seismic outline drawing shall be as shown in the examples of "seismic test-qualification report" in Annex T. All of the following shall be shown on one drawing:

a) Include in drawing block:
   1) Type of equipment
   2) Equipment voltage
   3) Approved by
   4) Report or contract number
   5) Qualified by IEEE Std 693-2005, Level (High or Moderate; Performance level High or Moderate)
   6) Drawing number block
b) Total weight
c) Dimension and weight of support (if applicable) and major components of the equipment
d) Location of the center of gravity of the equipment, with support (if applicable) and location of the center of gravity of the equipment only
e) Anchoring details showing bolt and weld sizes, their type and grade, and their locations
f) Resonant frequencies and damping ratio of the equipment
g) The test(s) performed to qualify the equipment
h) Maximum deflection(s) at conductor attachment point(s)
i) Controlling reactions at the base of the supporting structure for seismic loads and for seismic plus normal operating loads
j) Date of test
k) Outline view(s) of the equipment and support, giving the x, y, and z axes used in the report. Note the equipment outline must be kept recognizable, but simple with minimal detail (see Annex S and Annex T for examples)

Only that information listed in A.5.3 may be shown on the seismic outline drawing. Additional information not listed in A.5.3 must be shown on separate drawings or sheets.

A.5.4 Supplemental work and options

A *Supplemental Work and Options* section shall be included in the report. It shall include a listing of supplemental work and options, such as the following:

a) Anything requiring written approval by the user.
b) The manufacturer used materials not covered in item a) through item d) of A.2.1, such as structural plastics, which are not directly provided for in this recommended practice, but were approved by the original user (note that the use of plastic must be approved by all subsequent users also).

Copyright © 2006 IEEE. All rights reserved.

Copyright The Institute of Electrical and Electronics Engineers, Inc.
Provided by IHS under license with IEEE
No reproduction or networking permitted without license from IHS
Not for Resale

c) The original user required the specialist to also be a licensed Engineer.

d) The manufacturer chose to do the sine beat in addition to the time history, for example, for a 230 kV surge arrester.

e) The manufacturer chooses to exercise one of the options of 4.6.

f) Or the section shall state that there was no supplemental work or options performed.

A.6 Analysis report

A seismic report shall be prepared and supplied to the user. The report shall be as described in Annex S. The report, calculations, seismic outline drawing, charts, and records that show compliance with the seismic requirements of this recommended practice shall be approved and signed before issuance to the user by a qualified specialist competent in seismic analysis and qualification of electrical equipment. Test reports and plans used to justify any part of the analysis shall also be approved and signed before issuance to the user by the specialist.

The specialist shall meet the following requirements:

a) Understands and complies with all requirements of this recommended practice.

b) Provides a report acceptable to the user. An acceptable report provides the data and results required herein, in sufficient detail, which is easily understood, with labeled sketches and charts, organized as described in Annex S, with calculations that meet industry standards of competency.

c) Uses assumptions generally acceptable to experienced specialists.

d) Has had an appropriate and adequate education in seismic analysis.

e) Has had appropriate and adequate experience in preparing electrical equipment seismic analysis-qualification reports.

If any of the above requirements are not met, the person will not be considered qualified to sign the above documents.

The following criteria will be considered, but are not mandatory:

— Holds a valid Civil, Structural, or Mechanical Professional Engineering license

— Has taught or written papers concerning seismic analysis

— Has directed and signed seismic analysis-qualification reports

The documentation demonstrating compliance with the above requirements shall be provided to the user or the user's agent upon request.

The report shall be supplied to the user or the user's agent in English and in the units required by the user. Should corrections or additions be needed to the initial report, the entire final report shall be resubmitted to the user with the corrections and omissions included, once agreement of corrections and omissions have been reached.

The equipment parameters and variables, which may increase the equipment's vulnerability, shall be defined in the qualification report. Of particular concern are equipment parameters or variables that influence the failure modes. Items such as operating voltages, current rating, BIL, creep length, and rated strengths of porcelain members shall be documented.

Copyright © 2006 IEEE. All rights reserved.

Copyright The Institute of Electrical and Electronics Engineers, Inc.
Provided by IHS under license with IEEE
No reproduction or networking permitted without license from IHS
Not for Resale

A.6.1 Data (analysis)

The report shall include the following:

a) Tabulated summary of maximum controlling stresses, loads, and/or defections (f), allowable capacities (F), and their margins, starting in order with the equipment component's smallest (F/f) factor, for the support structure and equipment. (See the "Example of the Shake-Table Test—Summary of Maximum Stresses, Loads, etc." in Annex S.)

b) Tabulated list of all load cases showing maximum accelerations, stresses or loads, and displacements at critical points, if by dynamic analysis.

c) Tabulated list of equipment and structure reactions at foundation support points, including magnitude and direction, at each reaction point for each load case.

d) Anchorage details, including size, location, and material strength for structural members, bolts, or plates.

e) Maximum input (ground) accelerations.

f) Modifications required to pass the analysis.

g) Method of analysis and computer program name, if computer program used.

h) Assumptions made in modeling the equipment and supporting structure.

i) Tabulated list of material types and strengths.

j) All inputs and outputs from computer programs necessary to demonstrate the requirements of this recommended practice.

k) Model[23] with labeled nodes, members, and dimensions, if by dynamic analysis.

l) Member properties.

m) Plot of all modes considered, if by dynamic analysis.

n) Tabulated list of acceptance criteria allowables and performance values.

o) A picture or graphical reproduction of the identification plate (see A.8).

p) Document justifying the ultimate porcelain strength.

q) The SML value, if insulator or bushing is composite.

A.6.2 Seismic outline drawing (analysis)

The supplier shall also include in the report a one page 280 mm × 432 mm (11 in × 17 in), A3, 216 mm × 280 mm (8½ in × 11 in), or A4 seismic outline drawing of the equipment and support, if any support. The seismic outline drawing shall be as shown in the examples of "seismic analysis-qualification report" in Annex S. All of the following shall be shown on one drawing:

a) Include in drawing block:
   1) Type of equipment
   2) Equipment voltage

[23] If the model is complex, with many nodes and members, the model may be simplified provided all critical nodes and members are shown.

Copyright © 2006 IEEE. All rights reserved.

Copyright The Institute of Electrical and Electronics Engineers, Inc.
Provided by IHS under license with IEEE
No reproduction or networking permitted without license from IHS
Not for Resale

3) Approved by

4) Report or contract number

5) Qualified by IEEE Std 693-2005, Level (High or Moderate)

6) Drawing number block

b) Total weight

c) Dimensions and weight of support (if applicable) and major components of the equipment

d) Location of the center of gravity of the equipment, with support (if applicable) and location of the center of gravity of the equipment only

e) Anchoring details showing bolt and weld sizes, their type and grade, and their locations

f) Resonant frequencies and damping ratio of the equipment, if by dynamic analysis

g) The analysis method used

h) Any tests used to qualify the equipment, including the acceleration levels used

i) Maximum deflection(s) at conductor attachment point(s)

j) Controlling reactions at the base of the supporting structure for seismic loads and for seismic plus normal operating loads

k) Date prepared

l) Outline view(s) of the equipment and support, giving the x, y, and z axes used in the report (note the equipment outline must be kept recognizable, but simple with minimal detail. See Annex S and Annex T for examples)

A.6.3 Supplemental work and options

A *Supplemental Work and Options* section shall be included in the report. It shall include a listing of supplemental work and options, such as

a) Anything requiring written approval by the user.

b) The manufacturer used materials not covered in item a) through item d) of A.2.1 such as structural plastics, which are not directly provided for in this recommended practice, but were approved by the original user (note that the use of plastic must be approved by all subsequent users also).

c) The original user required the specialist to also be a licensed engineer.

d) The manufacturer chose to do the sine beat in addition to the time history, for example, for a 230 kV surge arrester.

e) The manufacturer chooses to exercise one of the options of 4.6.

f) Or the section shall state that there was no supplemental work or options performed.

A.7 Frequency or damping modifying devices or attachments (Base isolation)

Frequency or damping modifying devices shall not be used unless permitted in writing by the user or user's agent.

Copyright © 2006 IEEE. All rights reserved.

Copyright The Institute of Electrical and Electronics Engineers, Inc.
Provided by IHS under license with IEEE
No reproduction or networking permitted without license from IHS
Not for Resale

For systems that change the frequency or the damping characteristics of the equipment or the equipment support assembly for the purpose of seismic qualification (see 5.6), evidence and proof shall be provided in the report as follows:

a) The damping and frequency characteristics of the devices or attachments will not change.

b) The devices or attachments will not require maintenance.

c) The devices or attachments do not and will not require field adjustments or field pre-load or other installation requirements, unless otherwise approved by the user in writing.

d) The system will not adversely affect the operation or maintenance of the equipment over the life of the equipment.

e) The systems must be capable of accommodating displacements associated with performance level excitations.

f) The device shall have sufficient restoring capabilities to return the equipment to its original position after a performance level event.

The life of the equipment will be assumed to be 30 years.

A.8 Seismic qualification identification plate

The seismic qualification identification plate shall be designed and attached to the equipment to last its service life. The plate shall use the following designation:

Seismic Qualification plate: XYZ Manufacturing Company
IEEE 693-2005 — [DATE REPORT SIGNED] — QUALIFICATION LEVEL — [REPORT NUMBER] — OPTIONAL INFORMATION

An example **plate** is shown below for a 121 kV power circuit breaker:

Seismic Qualification plate: XZY Manufacturing Company
IEEE 693-2005 — [12/2006] — Moderate — [56877-FL] — Time History Shake-Table Test

— IEEE 693	This recommended practice
— [12/2006]	Date (Month/Year) testing or analysis report signed
— Moderate	Seismic qualification level; high or moderate
— [56877-FL]	Seismic qualification report number
— Time History Shake-Table Test	Optional information: This qualification plate area can be used to specify optional qualification methods as specified in 4.6

This example demonstrates a 121 kV power circuit breaker that was qualified using shake-table testing in lieu of the IEEE 693 specified dynamic analysis. Other seismic qualification information as specified by the manufacturer or purchaser can be placed in this area.

Copyright © 2006 IEEE. All rights reserved.

--`,,```,,,,````-`-`,,`,,`,`,,`---

Copyright The Institute of Electrical and Electronics Engineers, Inc.
Provided by IHS under license with IEEE
No reproduction or networking permitted without license from IHS
Not for Resale

Annex B

(normative)

Equipment, general

NOTE—Qualification requirements for specific equipment types, such as circuit breakers, transformers, and so on, are given in Annex C through Annex P. This annex may be used, if applicable, to qualify equipment that is not specifically provided for in Annex C through Annex P.

B.1 General

The requirements of this annex are applicable to equipment, (except for equipment that is specifically addressed in Annex C through Annex P) in high and moderate seismic qualification level areas. This annex contains four qualification methodologies: time history shake-table testing, static coefficient analysis, dynamic analysis, or static analysis. The user or the user's agent will supply the following to the manufacturer as part of the specification for that equipment:

a) Seismic qualification level (high or moderate).

b) Which qualification method to use (time history shake-table testing, static coefficient analysis, analysis, or a combination of methods). For pre-qualifying equipment, the time history test may be used. The time-history test shall be done according to the requirements of A.1.

c) Whether the equipment is to be supplied with or without a support.

d) Functional requirements, if any (see B.5.2).

e) Monitoring requirements, which are in addition to B.4.2, if any, if testing is required.

Functional requirements are generally associated with shake-table testing. These tests are electrical and mechanical production test(s) that should be performed before and after the shake-table test to ensure that the equipment continues to perform its intended operations and maintains the correct operational state after the testing. Some equipment may require functional tests during strong motion testing.

The user or the users agent may, if applicable, supply to the manufacturer the following:

— Materials, other than those already provided for in this recommended practice that the user will allow for use as equipment supports.

— An amplification value to be used in conjunction with the ZPA of the RRS should static analysis be acceptable as specified in B.4.3.

B.2 Operational requirements

The equipment and supporting structure shall be designed so that there will be neither damage nor loss of function during and after the seismic event. In addition, equipment shall maintain the correct operational state during the seismic event.

B.3 Seismic qualification method

Seismic withstand capability shall be demonstrated as directed by the user or the user’s agent (i.e., time history shake-table testing, static coefficient analysis, analysis, or a combination of methods).

Copyright © 2006 IEEE. All rights reserved.

Copyright The Institute of Electrical and Electronics Engineers, Inc.
Provided by IHS under license with IEEE
No reproduction or networking permitted without license from IHS
Not for Resale

B.4 Qualification procedure

The qualification procedure shall be according to the requirements of A.1.1.

B.4.1 Qualification procedure for time history shake-table testing

The equipment and structure, if required, shall be tested according to the requirements of A.1.2.2.

In addition to time history shake-table testing, some substation equipment may also require sine-beat testing as a condition of qualification; as an example, see Annex C. Sine-beat testing shall be in accordance with the requirements of A.1.2.3.

A resonant frequency search shall be performed according to the requirements of A.1.2.1.

B.4.2 Monitoring requirements for resonant frequency search and shake-table testing

Critical locations on the equipment and supporting structure shall be monitored for maximum displacement, maximum accelerations, and maximum stresses. Monitoring requirements shall be in accordance with A.2.8 and the following:

- Maximum displacement: Conductor attachment points of insulators and bushings.
- Maximum accelerations (vertical and horizontal): Top of insulators and bushings.
- Maximum stresses: Base of porcelain insulators and porcelain bushings. Base of supporting structure's leg(s). Base metal end flange connection of composite insulators and bushings.

B.4.3 Qualification procedure for analysis

The preparer of the analysis shall first determine the resonant frequency or frequencies of the equipment and its support by tests or dynamic analysis. In lieu of determining the frequencies, the dynamic analysis method of A.1.3.3 may be used.

If all frequencies are equal to or exceed 33 Hz, the static analysis method of A.1.3.1 may be used. If a frequency is less than 33 Hz, then the dynamic analysis method of A.1.3.3 shall be used.

B.4.4 Qualification procedure for static coefficient analysis

The qualification procedure shall be according to the requirements of A.1.3.2.

B.5 Acceptance criteria

The qualification will be considered acceptable if the following requirements given in B.5.1 and B.5.2 are met.

Copyright © 2006 IEEE. All rights reserved.

Copyright The Institute of Electrical and Electronics Engineers, Inc.
Provided by IHS under license with IEEE
No reproduction or networking permitted without license from IHS
Not for Resale

B.5.1 General

The general requirements are as follows:

a) The general criteria specified in A.2.1 and A.2.2.
b) If the time history test is required, the requirements of A.2.3.
c) If analysis is required, the requirements of A.2.7.
d) If static coefficient analysis is required, the requirements of A.2.7.

B.5.2 Functional requirements for shake-table tested equipment

If shake-table test is required, the functional requirements of the user or user's agent and those given in A.2.2.1 shall be met.

B.6 Design requirements

The equipment, support, and anchorage shall be designed according to A.4.

B.7 Report

A report shall be prepared and supplied.

B.7.1 Report for shake-table test

The report shall be in accordance with the requirements of A.5.

B.7.2 Report for dynamic, static coefficient analysis or static analysis

The report shall be in accordance with A.6.

B.8 Frequency or damping modifying devices and attachments

The requirements of A.7 shall be met.

B.9 Seismic identification plate

A seismic identification plate shall be attached to each piece of equipment supplied. The plate shall be as specified in A.8.

Copyright © 2006 IEEE. All rights reserved.

--`,,```,,,,````-`-`,,`,,`,`,,`---

Copyright The Institute of Electrical and Electronics Engineers, Inc.
Provided by IHS under license with IEEE
No reproduction or networking permitted without license from IHS
Not for Resale

Annex C

(normative)

Circuit breakers

C.1 General

The voltage kV, as used in this annex, is the rated maximum voltage as defined in ANSI C37.06. In the case where the voltage to ground is greater than the rated voltage, e.g., a series capacitor bypass circuit breaker, the higher voltage shall apply.

Seismic qualification levels are as given in C.1.1 through C.1.3.

C.1.1 High seismic qualification level

The requirements of Annex C, with the exception of C.1.2 and C.1.3, are applicable to all circuit breakers in high seismic level areas.

C.1.2 Moderate seismic qualification level

The requirements of Annex C, with the exception of C.1.1 and C.1.3, are applicable to all circuit breakers in moderate seismic level areas.

C.1.3 Low seismic qualification level

Only the requirements of A.1.1.4 are applicable to circuit breakers in low seismic qualification level areas. The user should refer to Clause 1 through Clause 8 for information.

C.2 Operational requirements

The circuit breaker and supporting structure shall be designed so that there will be neither damage nor loss of function during and after the seismic event. In addition, equipment shall maintain the correct operational state during the seismic event.

Copyright © 2006 IEEE. All rights reserved.

Copyright The Institute of Electrical and Electronics Engineers, Inc.
Provided by IHS under license with IEEE
No reproduction or networking permitted without license from IHS
Not for Resale

C.3 Seismic qualification method

Seismic withstand capability shall be demonstrated as follows:

a)	169 kV and above.	By time history and sine beat shake-table testing.	C.4.1
b)	121 kV to less than 169 kV.	By dynamic analysis.	C.4.2
c)	35 kV to less than 121 kV.	By static coefficient method.	C.4.3
d)	Less than 35 kV.	By inherently acceptable.	C.4.4

C.4 Qualification procedure

The qualification procedure shall be according to the requirements of A.1.1.

C.4.1 Time history and sine beat shake-table testing

For circuit breakers whose poles are dynamically independent, only one pole need be tested. The tested equipment shall include the control cabinet, including stored energy sources, and the associated current transformer, if applicable.

The qualification procedure shall be in five stages:

a) *Stage 1: Resonant frequency search*. A resonant frequency search shall be conducted to determine resonant frequencies according to the requirements of A.1.2.1.

b) *Stage 2: Time history test*. The equipment and support structure shall be tested according to the requirements of A.1.2.2.

c) *Stage 3: Time history operational test*. The circuit breaker and support structure shall be subjected to the same test described above in stage 2 with the addition of a breaker open-close-open (O-C-O) operation, during the strong motion. Breaker operation should be initiated at approximately the time at which the normalized Arias Intensity of 50% of maximum is achieved for one horizontal component of motion (see Clause 3 for a definition of Arias Intensity). During this test, the breaker shall be filled with gas at the rated operating pressure.

d) *Stage 4: Sine beat test*. The equipment and support structure shall be tested according to the requirements of A.1.2.3.

e) *Stage 5: Resonant frequency search*. A resonant frequency search shall be conducted according to the requirements of A.1.2.1.

To prevent injury or damage from possible failure of pressurized components, test with protective barriers and other appropriate precautions, as needed. As a minimum, all precautions shall be in accordance with any laboratory and legal requirements.

Copyright © 2006 IEEE. All rights reserved.

Copyright The Institute of Electrical and Electronics Engineers, Inc.
Provided by IHS under license with IEEE
No reproduction or networking permitted without license from IHS
Not for Resale

C.4.1.1 Monitoring requirements

Critical locations on the circuit breaker and supporting structure shall be monitored during all stages required above and for each test run for maximum displacement, maximum accelerations, and maximum stresses. Monitoring requirements shall be in accordance with A.2.8 and the following:

a) Maximum displacement: Top of bushing or connection point of conductor to equipment.

b) Maximum accelerations (vertical and horizontal): Top of bushing or insulator.

c) Maximum stresses: Base of porcelain bushing or insulator. Base of supporting structures leg.

To detect relay bounce and to verify that false operation will not occur, the following components shall be energized and monitored during stage 2 and stage 3 tests:

— The trip and close circuits and mechanism motor shall be energized.

— The X and Y relay contacts and SF6 density switch contacts shall be monitored.

The timing characteristics of the circuit breaker and the measurement of the resistance of the current carrying parts shall be recorded before the testing begins and as a minimum after completion of the last shake-table test. Pressure readings and sniff tests shall be made directly after each pressurized shake-table test to detect possible leaks.

The equipment and supports shall be inspected for cracking, buckling, or other types of failure or distress. Gaskets associated with support columns and bushings shall be inspected for evidence of slippage.

C.4.1.2 Production tests after shake-table testing

The circuit breaker shall undergo standard production tests after the completion of the shake-table tests.

C.4.2 Dynamic analysis

The qualification procedure shall be according to the requirements of A.1.3.3.

The analyzed equipment shall include the control cabinet, including stored energy sources, and associated current transformer, if applicable.

C.4.3 Static coefficient method

The qualification procedure shall be according to the requirements of A.1.3.2. The static coefficient may be taken as 1.0.

C.4.4 Inherently acceptable

The qualification procedure shall be according to the requirements of A.1.4.

Copyright © 2006 IEEE. All rights reserved.

--`,,```,,,,````-`-`,,`,,`,`,,`---
Copyright The Institute of Electrical and Electronics Engineers, Inc.
Provided by IHS under license with IEEE
No reproduction or networking permitted without license from IHS
Not for Resale

C.5 Acceptance criteria

The qualification will be considered acceptable if the following requirements given in C.5.1 and C.5.2 are met.

C.5.1 General

The general requirements are as follows:

a) The general criteria of A.2.1 and A.2.2. Also, there shall be no evidence of support column or bushing gasket slippage.

b) For the time history test, the requirements of A.2.3.

c) For the sine beat test, the requirements of A.2.4.

d) For the dynamic and static coefficient analysis, the requirements of A.2.7.

C.5.2 Functional requirements for shake-table tested equipment

The equipment shall meet the requirements of A.2.2.1.

The circuit breaker shall maintain the correct operational state, its trip coils shall perform their desired function, and contact bounce of circuits shall not occur to the extent that malfunction or mis-operation will occur during testing.

No leaks are found using a portable leak detector.

There shall not be a significant change in resistance readings between the terminals of each pole of the circuit breaker when measured in accordance with the manufacturer's procedures. If changes in readings do occur, they shall be within the tolerances in the manufacturer's specifications.

Changes in the opening and closing timing parameters, which shall include, as a minimum, open (contact part) time and opening velocity, and close (contact make) time and closing velocity, shall not exceed normal operation-to-operation variations, which are typically within a time of milliseconds.

Passage of the 60 Hz, 1-min high-voltage withstand tests as specified by IEEE Std C37.09, 5.16, is required. These tests will have to be performed in a high voltage laboratory. The tests should be performed in accordance with the manufacturer's production test procedures.

C.6 Design requirements

The equipment and support shall be designed according to A.4.

C.7 Report

A report shall be prepared and supplied.

Copyright © 2006 IEEE. All rights reserved.

Copyright The Institute of Electrical and Electronics Engineers, Inc.
Provided by IHS under license with IEEE
No reproduction or networking permitted without license from IHS
Not for Resale

C.7.1 Report for shake-table test

The report shall be in accordance with A.5.

C.7.1.1 Timing and resistance

The circuit breaker's pre-test and post-test opening and closing-timing characteristics and the resistance measurements of its current carrying parts shall be included in the report. Pre-test characteristics and measurements shall be provided before the beginning of shake-table tests.

C.7.1.2 Circuits monitoring

A list of circuits that were monitored along with any indication of a change in status during the tests shall be included in the report.

C.7.2 Report for dynamic or static analysis

The report shall be in accordance with A.6.

C.8 Frequency or damping modifying devices or attachments

The requirements of A.7 shall be met.

C.9 Seismic identification plate

A seismic identification plate shall be attached to each piece of equipment supplied. The plate shall be as specified in A.8.

Copyright © 2006 IEEE. All rights reserved.

Copyright The Institute of Electrical and Electronics Engineers, Inc.
Provided by IHS under license with IEEE
No reproduction or networking permitted without license from IHS
Not for Resale

Annex D

(normative)

Transformers and liquid-filled reactors

D.1 General

The voltage kV, as used in this annex, is the nominal system voltage as defined in IEEE Std C57.12.00.

The seismic qualification levels are given in D.1.1 through D.1.3.

D.1.1 High seismic qualification level

The requirements of Annex D, with the exception of D.1.2 and D.1.3, are applicable to transformers and liquid-filled reactors in high seismic qualification level areas.

D.1.2 Moderate seismic qualification level

The requirements of Annex D, with the exception of D.1.1 and D.1.3, are applicable to all transformers and liquid-filled reactors in moderate seismic qualification level areas.

D.1.3 Low seismic qualification level

Only the requirements of A.1.1.4 are applicable to transformers and liquid-filled reactors in low seismic qualification level areas. The user should refer to Clause 1 through Clause 8 for information.

D.2 Operational requirements

Transformers and liquid-filled reactors shall be designed so there will be neither structural damage nor loss of function immediately after an earthquake when subjected to design seismic loads occurring simultaneously with dead and normal operation loads.

D.3 Seismic qualification method

Seismic withstand capability shall be demonstrated as follows:

Transformer and liquid-filled reactors (kV referenced are the high side of the transformer and liquid-filled reactors), except bushing and surge arresters:

a) 115 kV and above. By static analysis. D.4.1

Copyright © 2006 IEEE. All rights reserved.

Copyright The Institute of Electrical and Electronics Engineers, Inc.
Provided by IHS under license with IEEE
No reproduction or networking permitted without license from IHS Not for Resale

b)	35 kV to less than 115 kV.	By load path.	D.4.2
c)	Less than 35 kV.	By inherently acceptable.	D.4.3

Bushings:

a)	161 kV and above.	By time history shake-table tests.	D.4.4
b)	35 kV to less than 161 kV.	By static pull test.	D.4.5
c)	Less than 35 kV	By inherently acceptable.	D.4.3

Surge arresters:

a)	All kVs.	By requirements given in Annex K.	D.4.6

D.4 Qualification procedure

The qualification procedure shall be according to the requirements of A.1.1.

D.4.1 Static analysis

D.4.1.1 Qualification of tank components (excluding appendages)

The transformer tank, core, coils, anchorage, and other components other than appendages, bushings, and surge arresters shall be qualified using static analysis according to the requirements of A.1.3.1.

The static analysis calculations shall include verification of the load path from the core, coils, tank, and base to the anchorage for all three orthogonal axes. All components of the load path shall have sufficient rigidity to restrain the core and coil from shifting. Sketches shall be provided with the analysis that clearly show a complete load path(s) to the anchorage. Load path parts and members shall be clearly labeled and dimensioned. Section properties, calculated stresses, and allowables of all load path parts and members shall be provided.

D.4.1.2 Qualification of appendages, such as radiators, conservators, and control cabinets

Appendages such as radiators, conservators, and control cabinets shall be qualified by static analysis according to the requirements of A.1.3.1, where the acceleration values are multiplied by 3.

D.4.2 Load path calculations

A load path evaluation shall be made for both horizontal axes from the core, yoke, coils, tank, and base to the anchorage. Sketches shall be provided with the evaluation that clearly shows complete load path(s) to the anchorage. Load path parts and members shall be clearly labeled. Any dimensions or section properties needed to clarify or verify the load path shall also be provided.

Copyright © 2006 IEEE. All rights reserved.

Copyright The Institute of Electrical and Electronics Engineers, Inc.
Provided by IHS under license with IEEE
No reproduction or networking permitted without license from IHS
Not for Resale

The load path, as defined in A.1.3.4, shall be identified and documented. The appendages (such as radiators, conservators, and control cabinet) and the bushings are excluded from the load path, but the loads attributed to the appendages shall be propagated through the load path.

D.4.3 Inherently acceptable

The qualification procedure shall be according to the requirements of A.1.4.

D.4.4 Bushing time history shake-table tests

Bushings 161 kV and above shall be qualified using a time history test according to the requirements of A.1.2.2. A resonant frequency search shall be conducted according to A.1.2.1. Because it is impractical to shake-table test the bushing(s) on the transformer or liquid-filled reactor, the bushing(s) shall be mounted on a rigid stand during the test. The stresses the bushing actually experiences from the ground acceleration are amplified due to the influence of the transformer body. Because of the complexity of the flange connection and the criticality of the transformer bushing, it is not acceptable to attempt to project the performance for the RRS test. The bushing shall be tested to twice the input level required at the top of the transformer. Therefore, bushings shall be tested to four times (Figure A.1) for the high seismic level or four times (Figure A.2) for the moderate seismic level. This testing is to the performance level.

If resistance to lateral load depends on clamping or pre-stressing of the bushing core, reduction of pre-stressing force due to thermal expansion, relaxation, or material creep effects anticipated at operating temperatures shall be accounted for in qualification tests. As a minimum, specimens used for seismic qualification tests shall be assembled with core clamping forces adjusted for both ambient and operating temperatures above the temperature at assembly.

Rise due to ambient temperature in excess of temperature at assembly shall be based on an operating ambient of +30 °C. Operating temperature rise may be conservatively based on the thermal basis of rating requirements given in IEEE Std C57.19.00. Thermal analysis or test data applicable to the specific bushing model may be used in lieu of values given in IEEE Std C57.19.00. Temperature differentials for the bushing shell, core tube, flange, and other affected parts shall be determined from tests, analysis, or other rational methods.

A suggested method for adjustment of the core clamping force due to elevated temperatures is given as follows:

a) Identify and compute the stiffness (force required to cause a unit displacement) of elements that carry loads due to the core clamping force. Typically these components include the porcelain sections, flange, spacers, spring assemblies, and core tube. The elements having the lowest stiffness will have the greatest effect on loss of core clamping force. Particular caution should be used in developing the stiffnesses of nonlinear elements such as gaskets. The stiffness of spring assemblies should account for their arrangement (e.g., whether individual springs or their sub-assemblies are placed to act in parallel, or stacked in series). In general, the predicted loss of core clamping force will be overestimated by the use of higher stiffnesses of the individual components. Because ignoring the contribution of any element is equivalent to setting its stiffness to infinity, omission of any element from the stiffness calculation will overestimate the predicted loss of core clamping force, and it is acceptable.

b) Compute the effective stiffness of the bushing (the components described above may be considered to be springs connected in series, because they all carry the same magnitude of force, although some are loaded in tension, whereas others are loaded in compression). Note that overestimating the stiffness of the bushing or its individual components will result in an increased predicted loss of clamping force, which is conservative.

Copyright © 2006 IEEE. All rights reserved.
--`,,```,,,,````-`-`,,`,,`,`,,`---

Copyright The Institute of Electrical and Electronics Engineers, Inc.
Provided by IHS under license with IEEE
No reproduction or networking permitted without license from IHS
Not for Resale

$$K_{\text{eff}} = \frac{1}{\sum\left(1/K_i\right)}$$

where

K_i is the stiffness of the *i*th component that carries forces due to core clamping
K_{eff} is the effective stiffness of bushing

c) Determine temperature differentials (ΔT) for each component that carries clamping force, and compute extension due to ΔT. Compute net extension (Δ_{exp}) of the assembly by summing the change in length of the individual components.

$$\Delta_{\text{exp}} = \sum\left(\Delta T_i C_i L_i\right)$$

where

ΔT_i is the temperature differential for the ith component
C_i is the coefficient of thermal expansion for the ith component
L_i is the length of the ith component in the direction parallel to the core tube

NOTE— The quantity ($\Delta T_i\ C_i\ L_i$) is taken as negative if the component is loaded in compression (e.g., porcelain and flange) and positive if loaded in tension (e.g., core tube).

d) Determine the adjusted clamping force simulating in-service conditions as follows:

$$P_f = P_o - K_{\text{eff}}\Delta_{\text{exp}}$$

where

P_f is the adjusted clamping force simulating an in-service condition
P_o is the initial clamping force applied during assembly
Δ_{exp} is the net expansion of assembled bushing components

The adjusted clamping force P_f should be used during assembly of the seismic qualification test specimen.

Each bushing shall be tested at no less than its in-service slope (the slope angle measured from vertical). It is recommended that the bushing be tested at 20 degrees measured from vertical. Hence, the bushing qualification will be acceptable for use on all transformers with angles from vertical to 20 degrees. In service mounting of bushings at an angle greater than that which it was tested will negate the qualification. All bushings at angles greater than 20 degrees shall be tested at its in-service angle.

D.4.4.1 Monitoring requirements for porcelain bushings

Monitoring requirements shall be in accordance with A.2.8 and the following:

a) Maximum vertical and horizontal accelerations at the top of the bushing, at the end of the bottom of the bushing, at the bushing flange, center of gravity of that part of the bushing above the porcelain/flange interface, and at the top of the shake-table.

Copyright © 2006 IEEE. All rights reserved.

Copyright The Institute of Electrical and Electronics Engineers, Inc.
Provided by IHS under license with IEEE
No reproduction or networking permitted without license from IHS
Not for Resale

b) Maximum relative displacement of the top of the bushing to the flange shall be measured during the test or calculated from the acceleration time histories.

c) Maximum porcelain stresses at the base of the bushing (near the flange).

d) Maximum stresses at the flange metal end fitting and maximum stresses in the flange attachment bolts. The maximum stresses in the bolts may be found by calculations. However, the use of strain bolts is recommended.

e) Slippage of bushing relative to the base.

D.4.4.2 Monitoring requirements for composite polymer bushings

Monitoring requirements shall be in accordance with A.2.8 and the following:

a) Maximum vertical and horizontal accelerations at the top of the bushing, at the end of the bottom of the bushing, at the bushing flange, and at the top of the shake-table.

b) Maximum relative displacement of the top of the bushing to the flange shall be measured during the test or calculated from the acceleration time histories.

c) Maximum stresses at the flange metal end fitting and maximum stresses in the flange attachment bolts. The maximum stresses in the bolts may be found by calculations. However, the use of strain bolts is recommended.

D.4.5 Bushing static pull test

Bushing 35 kV to 161 kV shall be qualified by static pull test, as specified in A.1.2.4.

D.4.6 Qualification of surge arresters

Surge arresters shall be qualified according to the requirements of Annex K, except that twice the input acceleration specified by Annex K shall be used.

D.5 Acceptance criteria

The qualification will be considered acceptable, if the following requirements given in D.5.1 and D.5.2 are met.

D.5.1 General

a) *General criteria*. For components that are shake-table tested or static pull tested, there shall be no evidence of damage, such as broken, shifted, or dislodged insulators; visible leakage of oil; or broken support flanges.

Copyright © 2006 IEEE. All rights reserved.

Copyright The Institute of Electrical and Electronics Engineers, Inc.
Provided by IHS under license with IEEE
No reproduction or networking permitted without license from IHS
Not for Resale

b) *Acceptance criteria*. The stresses in parts, members, and components, including flange attachment bolts, shall meet the requirements of A.2.1. In lieu of the acceptance criteria of item b) of D.5.1, for bushings tested to four times the RRS, the acceptance criteria of A.2.6 may be used.

c) *Composite polymer bushings*. These bushings shall meet the requirements in A.2.1 and A.2.2.3.

d) *Leakage criteria for bushings*. Bushings shall not leak, and porcelain bushings shall not slip at the porcelain-flange interface.

e) *Requirements for radiators*. For radiators of transformers and liquid-filled reactors having a high side of 115 kV and above, horizontal and vertical seismic bracing for the radiator shall be connected directly to the body of the transformer. Bending, shear, and axial loads across the gasket connection of the radiators or radiator manifolds to the main body of the transformer shall be limited by assuring that stiffness of the radiator bracing system is much larger than that of the gasket connection. As an alternative, the radiator can be supported independent of the transformer and connected to the transformer by flexible connections. Support of the radiator by both the transformer and an independent support to the foundation is not permitted, unless the following conditions are met:

   1) The radiator is supported on the same continuous pad as the tank.

   2) The horizontal seismic bracing for the radiator is connected directly to the body of the transformer. Vertical dead weight and seismic loads only may be transmitted directly to the foundation from the radiator.

   3) Bending, shear, and axial loads across the gasket connection of the radiators or radiator manifolds to the main body of the transformer shall be limited by assuring that stiffness of the radiator bracing system is much larger than that of the gasket connection.

f) *Static pull test*. Bushing qualified by the static pull test shall meet the requirements of A.2.5. Item a) through item e) of D.5.1 do not apply to static pull tested bushings.

D.5.2 Functional requirements for shake-table tested equipment

The equipment shall meet the requirements of A.2.2.1.

After shake-table testing of bushings, they shall be subjected to and pass all routine tests as specified in the latest revision of IEEE Std C57.19.00.

Surge arresters shall pass the functional tests described in Annex K.

Copyright © 2006 IEEE. All rights reserved.

Copyright The Institute of Electrical and Electronics Engineers, Inc.
Provided by IHS under license with IEEE
No reproduction or networking permitted without license from IHS
Not for Resale

D.6 Design requirements

D.6.1 Design and construction

The transformer or liquid-filled reactor tank shall be fabricated from steel. The transformer or liquid-filled reactor and supports for appendages shall be designed according to A.4.

D.6.2 Anchorage welds

All transformers and liquid-filled reactors shall be designed to be field welded to embedded plates or beams. The vendor shall indicate, on the equipment outline drawing, locations, size, and length of field welds, and if applicable, locations where welding is not allowed.

D.7 Report

Portions of the transformer or liquid-filled reactor will be qualified by testing (bushing and surge arresters), wheras other portions will be qualified by analysis. For components qualified by testing, a test report shall be prepared and supplied in accordance with A.5. For portions qualified by analysis, an analysis report shall be prepared and supplied in accordance with A.6.

D.8 Frequency or damping modifying devices or attachments

The requirements in A.7 are applicable to these components.

D.9 Seismic identification plate

A seismic identification plate shall be attached to each piece of equipment supplied. The plate shall be as specified in A.8.

Copyright © 2006 IEEE. All rights reserved.

Copyright The Institute of Electrical and Electronics Engineers, Inc.
Provided by IHS under license with IEEE
No reproduction or networking permitted without license from IHS
Not for Resale

Annex E

(normative)

Disconnect and grounding switches

E.1 General

The voltage kV, as used in this annex, is the rated maximum voltage as defined in ANSI C37.32-2002.

Seismic qualification levels are given in E.1.1 through E.1.3.

E.1.1 High seismic qualification level

The requirements of Annex E, with the exception of E.1.2 and E.1.3, are applicable to all voltage classes of disconnect switches and grounding switches, including the support structure, operating mechanism, and other associated equipment as required for field installation in high seismic qualification level areas.

E.1.2 Moderate seismic qualification level

The requirements of Annex E, with the exception of E.1.1 and E.1.3, are applicable to all voltage classes of disconnect switches and grounding switches, including the support structure, operating mechanism, and other associated equipment as required for field installation in moderate seismic qualification level areas.

E.1.3 Low seismic qualification level

Only the requirements of A.1.1.4 are applicable to disconnect switches in low seismic qualification level areas. The user should refer to Clause 1 through Clause 8 for information.

E.2 Operating requirements

The disconnect switches, grounding switches, and support structures shall be designed so there will be neither damage nor loss of function during and after the seismic event. The operational state shall remain correct during the seismic event.

E.3 Seismic qualification methods

Seismic withstand capability shall be demonstrated as follows:

a) 169 kV and above. By time history shake-table testing. E.4.1

Copyright © 2006 IEEE. All rights reserved.

Copyright The Institute of Electrical and Electronics Engineers, Inc.
Provided by IHS under license with IEEE
No reproduction or networking permitted without license from IHS Not for Resale

b)	121 kV to less than 169 kV.	By dynamic analysis.	E.4.2
c)	35 kV to less than 121 kV.	By static coefficient analysis.	E.4.3
d)	Less than 35 kV.	By inherently acceptable.	E.4.4

E.4 Qualification procedures

The qualification procedures shall be according to the requirements of A.1.1.

The tests or analysis shall be performed with the disconnect switch open and closed. If a ground switch is included, the tests or analysis shall be performed with the disconnect switch open and the ground switch closed, with the disconnect switch open and the ground switch open, and with the disconnect switch closed and the ground switch open.

E.4.1 Time history shake-table testing

The switch, structure, operating mechanism, and other associated equipment shall be set up (on the shake-table) and adjusted. Correct operating (full opening and full closing) is to be verified before any testing. After the equipment is set up and adjusted, the testing is to proceed as follows:

The equipment and structure shall be tested according to the requirements of A.1.2.2.

A resonant frequency search shall be performed according to the requirements of A.1.2.1.

E.4.1.1 Monitoring requirements

Critical locations on the disconnect switch, grounding switch, and supporting structure shall be monitored for maximum displacements, maximum accelerations, and maximum stresses. Monitoring requirements shall be in accordance with A.2.8 and the following:

a) Maximum displacements at the top of the insulator and the end of the blade.

b) Maximum accelerations, vertically and horizontally, at the top of the insulator, the end of the blade, and the top of the shake table.

c) Maximum stresses at the base of the porcelain insulator or metal end fitting of composite insulator, and at the base of the switch arm hinge, and the base of the two opposite diagonal legs of the supporting structure.

d) Any electrical equipment, such as a motor operator, shall be energized during testing and monitored to detect relay bounce and the potential for misoperation.

e) Monitor critical variables of the following components (see A.3):

   1) Castings supporting the post insulator

   2) The hinge of vertical break switches

   3) Bearing supporting rotating insulators

All data shall be time dependent, so values can be compared.

Copyright © 2006 IEEE. All rights reserved.

Copyright The Institute of Electrical and Electronics Engineers, Inc.
Provided by IHS under license with IEEE
No reproduction or networking permitted without license from IHS
Not for Resale

E.4.2 Dynamic analysis

The qualification procedure shall be according to the requirements of A.1.3.3.

E.4.3 Static coefficient analysis

The qualification procedure shall be according to the requirements of A.1.3.2. A static coefficient of 1.0 may be used.

E.4.4 Inherently acceptable

The qualification procedure shall be according to the requirements of A.1.4.

E.5 Acceptance criteria

The qualification will be considered acceptable, if the following requirements given in E.5.1 and E.5.2 are met.

E.5.1 General

The general requirements are as follows:

a) The criteria of A.2.1 and A.2.2.

b) During the testing, the disconnect switch and grounding switch shall maintain the correct operational state. When tested in the "closed position," it shall stay closed throughout the duration of testing, and when tested in the "open position," it shall stay open throughout the duration of testing.

c) For the shake-table test, the measured deflections shall be within the design limitations of the disconnect switch or grounding switch.

d) For the time history test, the requirements of A.2.3.

e) For the dynamic and static coefficient analysis, the requirements of A.2.7.

E.5.2 Functional requirements for shake-table tested equipment

The equipment shall meet the requirements of A.2.2.1.

The shake-table tested switch shall pass the following tests to ensure its functionality:

a) *Millivolt drop test*. Circuit resistance shall be tested before and after the shake-table test as specified in IEC 129.

Copyright © 2006 IEEE. All rights reserved.

Copyright The Institute of Electrical and Electronics Engineers, Inc.
Provided by IHS under license with IEEE
No reproduction or networking permitted without license from IHS
Not for Resale

b) *Continuity*. Electrical continuity shall be monitored across the main disconnect switch or ground circuit when the switch or ground is closed during shake-table testing.

c) *Mechanical operating test*. The disconnect switch and the ground switch, if applicable, shall be operated (closed to opened and opened to closed). Correct operation, full opening, and full closing shall be verified. The correct operation and function of all associated equipment shall be verified. Insulator support plates, shafts, and mechanical linkage should be evaluated or monitored for deformation or failure.

The post shake-table millivolt drop test and the mechanical operating test shall be performed while the disconnect switch is on the shake table.

E.6 Design requirements

The equipment and support shall be designed according to A.4.

E.7 Report

A report shall be prepared and supplied.

E.7.1 Report for shake-table test

The report shall be in accordance with A.5.

E.7.2 Report for dynamic or static coefficient analysis

The report shall be in accordance with A.6.

E.8 Frequency or damping modifying devices or attachments

The requirements of A.7 shall be met.

E.9 Seismic identification plate

A seismic identification plate shall be attached to each piece of equipment supplied. The plate shall be as specified in A.8.

Copyright © 2006 IEEE. All rights reserved.

--`,,```,,,,````-`-`,,`,,`,`,,`---

Copyright The Institute of Electrical and Electronics Engineers, Inc.
Provided by IHS under license with IEEE
No reproduction or networking permitted without license from IHS
Not for Resale

Annex F

(normative)

Instrument transformers

F.1 General

The requirements of Annex F are applicable to all instrument transformers (IT), including the following:

a) Capacitor voltage transformers (CVTs)
b) Coupling capacitor voltage transformers (CCVTs)
c) Voltage transformers (VTs)
d) Current transformers (CTs)

The voltage kV, as used in this annex, is the nominal system voltage (kV) per IEEE Std C57.13-1993 for the CT and VT and per ANSI C93.1-1999 for the CVT and CCVT.

Seismic qualification levels are as given in F.1.1 through F.1.3.

F.1.1 High seismic qualification level

The requirements of Annex F, with the exception of F.1.2 and F.1.3, are applicable to all instrument transformers in high seismic qualification level areas.

F.1.2 Moderate seismic qualification level

The requirements of Annex F, with the exception of F.1.1 and F.1.3, are applicable to all instrument transformers in moderate seismic qualification level areas.

F.1.3 Low seismic qualification level

Only the requirements of A.1.1.4 are applicable to instrument transformers in low seismic qualification level areas. The user should refer to Clause 1 through Clause 8 for information.

F.2 Operational requirements

The equipment and supporting structure shall be designed so that there will be neither damage nor loss of function during and after the seismic event. In addition, equipment shall maintain the correct operational state during the seismic event.

Copyright © 2006 IEEE. All rights reserved.

--`,,```,,,,````-`-`,,`,,`,`,,`---

Copyright The Institute of Electrical and Electronics Engineers, Inc.
Provided by IHS under license with IEEE
No reproduction or networking permitted without license from IHS

Not for Resale

F.3 Seismic qualification method

Seismic withstand capability of the equipment shall be demonstrated by:

a)	230 kV and greater or having a total equipment height equal to or greater than 6.1 m (20 ft) including the support structure.	By time history shake-table testing.	F.4.1
b)	69 kV to less than 230 kV.	By dynamic analysis.	F.4.2
c)	35 kV to less than 69 kV.	By static coefficient analysis.	F.4.3
d)	Less than 35 kV.	By inherently acceptable.	F.4.4

F.4 Qualification procedure

The qualification procedure shall be according to the requirements of A.1.1.

F.4.1 Time history shake-table testing

The equipment to be shake-table tested shall be tested according to the requirements of A.1.2.2. Devices that are pressurized should be shake-table tested in a pressurized condition.

A resonant frequency search shall be performed according to the requirements of A.1.2.1.

F.4.1.1 Monitoring requirements

Critical locations on the equipment and supporting structure shall be monitored for maximum displacement, maximum accelerations, and maximum stresses. Monitoring requirements shall be in accordance with A.2.8 and the following:

a) Maximum displacement: Top of equipment

b) Maximum accelerations (vertical and horizontal): Top of equipment

c) Maximum stresses: Base of porcelain insulator or metal end fitting of composite insulator, and base of supporting structure

d) Monitor critical variable of the base box (see A.3)

F.4.1.2 Post-shake-table testing

The equipment shall undergo routine production electrical and mechanical tests after the completion of the shake-table tests. In addition, devices that are pressurized or sealed against atmospheric contamination shall be tested to ensure seal integrity. Oil-filled units shall be checked for leaks.

Copyright © 2006 IEEE. All rights reserved.
--`,,```,,,,````-`-`,,`,,`,`,,`---

Copyright The Institute of Electrical and Electronics Engineers, Inc.
Provided by IHS under license with IEEE
No reproduction or networking permitted without license from IHS
Not for Resale

F.4.2 Dynamic analysis

The equipment to be dynamically analyzed shall be analyzed according to the requirements of A.1.3.3.

F.4.3 Static coefficient analysis

The equipment shall be analyzed according to the requirements of A.1.3.2. The static coefficient may be taken as 1.0.

F.4.4 Inherently acceptable

The qualification procedure shall be according to the requirements of A.1.4.

F.5 Acceptance criteria

The qualification will be considered acceptable, if the following requirements given in F.5.1 and F.5.2 are met.

F.5.1 General

The general requirements are as follows:

a) The general criteria of A.2.1 and A.2.2.
b) For the time history shake-table test, the requirements of A.2.3.
c) For dynamic and static coefficient analysis, the acceptance requirements of A.2.7.

F.5.2 Functional requirements for shake-table tested equipment

The equipment shall meet the requirements of A.2.2.1.

Functional requirements for post-shake-table testing include passage of routine production electrical and mechanical tests. In addition, devices that are pressurized and sealed against atmospheric contamination shall be tested to ensure seal integrity. Oil-filled units shall not leak.

F.6 Design requirements

The equipment and support shall be designed according to A.4.

Copyright © 2006 IEEE. All rights reserved.

--`,,```,,,,````-`-`,,`,,`,`,,`---

Copyright The Institute of Electrical and Electronics Engineers, Inc.
Provided by IHS under license with IEEE
No reproduction or networking permitted without license from IHS
Not for Resale

F.7 Report

A report shall be prepared and supplied.

F.7.1 Report for shake-table test

The report shall be in accordance with A.5.

F.7.2 Report for dynamic or static coefficient analysis

The report shall be in accordance with A.6.

F.8 Frequency or damping modifying devices or attachments

The requirements of A.7 shall be met.

F.9 Seismic identification plate

A seismic identification plate shall be attached to each piece of equipment supplied. The plate shall be as specified in A.8.

Copyright © 2006 IEEE. All rights reserved.

--`,,```,,,,````-`-`,,`,,`,`,,`---

Copyright The Institute of Electrical and Electronics Engineers, Inc.
Provided by IHS under license with IEEE
No reproduction or networking permitted without license from IHS

Not for Resale

Annex G

(normative)

Air core reactors

G.1 General

Liquid-filled reactors shall meet the requirements specified in Annex D.

The voltage kV, as used in this annex, is the nominal system voltage as defined in IEEE Std C57.16-1996 and IEEE Std C57.21-1990.

The seismic qualification procedure for suspended air core reactors shall be according to Annex I.

Devices used to provide air core reactors with the necessary clearance to the foundation for convection cooling, voltage clearance, and magnetic field effects are deemed to be an inherent component of an air core reactor.

Seismic qualification levels are as given in G.1.1 through G.1.3.

G.1.1 High seismic qualification level

The requirements of Annex G, with the exception of G.1.2 and G.1.3, are applicable to all air core reactors in high seismic qualification level areas.

G.1.2 Moderate seismic qualification level

The requirements of Annex G, with the exception of G.1.1 and G.1.3, are applicable to all air core reactors in moderate seismic qualification level areas.

G.1.3 Low seismic qualification level

Only the requirements of A.1.1.4 are applicable to air core reactors in low seismic qualification level areas. The user should refer to Clause 1 through Clause 8 for information.

G.2 Operational requirements

Reactors shall be designed so that there will be neither structural damage nor loss of function when design seismic loads occur simultaneously with dead and normal operating loads.

Copyright © 2006 IEEE. All rights reserved.

Copyright The Institute of Electrical and Electronics Engineers, Inc.
Provided by IHS under license with IEEE
No reproduction or networking permitted without license from IHS
Not for Resale

G.3 Seismic qualification method

Seismic withstand capability shall be demonstrated as follows:

a)	115 kV and above.	By dynamic analysis.	G.4.1
b)	35 kV to less than 115 kV.	By static coefficient analysis.	G.4.2
c)	Less than 35 kV.	By inherently acceptable.	G.4.3

G.4 Qualification procedure

The qualification procedure shall be according to the requirements of A.1.1.

G.4.1 Dynamic analysis

The qualification procedure shall be according to the requirements of A.1.3.3.

G.4.2 Static coefficient analysis

The qualification procedure shall be according to the requirements of A.1.3.2. The static coefficient shall be taken as 1.5 for stacked reactors. For single reactors, a static coefficient of 1.0 may be used.

G.4.3 Inherently acceptable

The qualification procedure shall be according to the requirements of A.1.4.

G.5 Acceptance criteria

The qualification will be considered acceptable if the applicable requirements of A.2 are met.

G.6 Design requirements

The equipment and supports shall be designed according to A.4.

G.7 Report

A report shall be prepared and supplied in accordance with A.6.

Copyright © 2006 IEEE. All rights reserved.

Copyright The Institute of Electrical and Electronics Engineers, Inc.
Provided by IHS under license with IEEE
No reproduction or networking permitted without license from IHS
Not for Resale

G.8 Frequency or damping modifying devices or attachments

The requirements in A.7 shall be met.

G.9 Seismic identification plate

A seismic identification plate shall be attached to each piece of equipment supplied. The plate shall be as specified in A.8.

Copyright © 2006 IEEE. All rights reserved.
--`,,```,,,,````-`-`,,`,,`,`,,`---

Copyright The Institute of Electrical and Electronics Engineers, Inc.
Provided by IHS under license with IEEE
No reproduction or networking permitted without license from IHS
Not for Resale

Annex H

(normative)

Circuit switches

H.1 General

The voltage kV, as used in this annex, is the rated maximum voltage, as defined in ANSI C37.06-2000, the highest root-mean-square voltage, above nominal system voltage, for which the circuit switcher is designed.

Seismic qualification levels are given in H.1.1 through H.1.3.

H.1.1 High seismic qualification level

The requirements of Annex H, with the exception of H.1.2 and H.1.3, are applicable to all circuit switchers in high seismic qualification level areas.

H.1.2 Moderate seismic qualification level

The requirements of Annex H, with the exception of H.1.1 and H.1.3, are applicable to all circuit switchers in moderate seismic qualification level areas.

H.1.3 Low seismic qualification level

Only the requirements of A.1.1.4 are applicable to circuit switchers in low seismic qualification level areas. The user should refer to Clause 1 through Clause 8 for information.

H.2 Operational requirements

The circuit switcher consisting of interrupter, optional disconnecting switch, operating mechanism, control cabinet, and supporting structure shall be designed so that there will be neither structural damage nor loss of function during and after a seismic event. The circuit switcher shall not mis-operate during the seismic event.

H.3 Seismic qualification method

Seismic withstand capability shall be demonstrated as follows:

a) 169 kV and above. By time history shake-table testing. H.4.1

Copyright © 2006 IEEE. All rights reserved.
--`,,```,,,,````-`-`,,`,,`,`,,`---

Copyright The Institute of Electrical and Electronics Engineers, Inc.
Provided by IHS under license with IEEE
No reproduction or networking permitted without license from IHS Not for Resale

b)	120 kV to less than 169 kV.	By dynamic analysis.	H.4.2
c)	35 kV to less than 121 kV.	By static coefficient analysis.	H.4.3
d)	Less than 35 kV.	By inherently acceptable.	H.4.4

H.4 Qualification procedure

The qualification procedure shall be according to the requirements of A.1.1

H.4.1 Time history shake-table testing

The qualification procedure shall be in four stages:

a) *Stage 1: Resonant frequency search*. A sine wave frequency search shall be conducted according to the requirements of A.1.2.1.

b) *Stage 2: Time history shake-table test*. The circuit switcher and structure shall be tested according to the requirements of A.1.2.2. The circuit switcher shall be tested in both closed and opened positions.

c) *Stage 3: Time history shake-table operational test*. The circuit switcher shall be tested again according to the requirements of A.1.2.2. But this time, the circuit switcher shall be operated open from a closed position during the strong motion period. Circuit switcher operation should be initiated at approximately the time at which the normalized Arias Intensity of 50% of maximum is achieved for one of the horizontal components of motion (see 3.1 for a definition of Arias Intensity). During this test, the circuit switcher shall be filled with gas at rated operating pressure. (Note: Test with protective barriers to prevent injury or damage from failure of pressurized components.)

d) *Stage 4: Resonant frequency search*. A sine wave frequency search shall be conducted according to the requirements of A.1.2.1.

H.4.1.1 Monitoring requirements

Critical locations on the circuit switcher and supporting structure shall be monitored to determine the maximum displacements, maximum accelerations, and maximum stresses. Monitoring requirements shall be in accordance with A.2.8 and the following:

a) Horizontal displacements of circuit switcher terminals.

b) Accelerations, vertical and horizontal, of the top ends of vertical insulating components.

c) Stresses at the bases of vertical porcelain insulating components and metal end fitting of composite insulators.

d) Stresses at the ends of horizontal porcelain insulating components.

e) Stresses at the base of the supporting structures.

The main power contact circuits and auxiliary contact stack shall be monitored to verify that the circuit switcher does not mis-operate during the seismic event.

Copyright © 2006 IEEE. All rights reserved.

Copyright The Institute of Electrical and Electronics Engineers, Inc.
Provided by IHS under license with IEEE
No reproduction or networking permitted without license from IHS
Not for Resale

Timing and resistance measurements shall be taken before the testing begins and after the shake-table tests are completed.

The circuit switcher shall be monitored for leaks before and after each time history test. Pressure readings shall be made after each pressurized time history test for comparison with pretest readings to detect leaks.

H.4.1.2 Production tests following shake-table testing

The circuit switcher shall undergo standard production tests after the completion of the shake-table tests.

H.4.2 Dynamic analysis

The dynamic analysis procedure shall be according to the requirements of A.1.3.3.

H.4.3 Static coefficient analysis

The qualification procedure shall be according to the requirements of A.1.3.2. The static coefficient may be taken as 1.0.

H.4.4 Inherently acceptable

The qualification procedure shall be according to the requirements of A.1.4.

H.5 Acceptance criteria

The qualification will be considered acceptable if the following criteria given in H.5.1 and H.5.2 are met.

H.5.1 General

The general requirements are as follows:

a) The general criteria of A.2.1 and A.2.2.
b) For the time history shake-table test, the requirements of A.2.3.
c) For the dynamic and static coefficient analysis, the requirements of A.2.7.

H.5.2 Functional requirements for time history shake-table tested equipment

The equipment shall meet the requirements of A.2.2.1.

Copyright © 2006 IEEE. All rights reserved.

Copyright The Institute of Electrical and Electronics Engineers, Inc.
Provided by IHS under license with IEEE
No reproduction or networking permitted without license from IHS
Not for Resale

The circuit switcher shall maintain the correct operational state during the time history test. The circuit switcher shall properly open during the time history operational shake-table test. Control logic components, trip and close coils, and mechanical systems shall operate properly. Pressurized modules shall not leak. Resistance readings between the terminals shall be within manufacturing limits for a new device after shake-table testing. Disconnect blades shall operate without binding or requiring physical adjustment.

The circuit switch shall pass all standard production tests after completion of the shake-table tests.

H.6 Design requirements

The circuit switcher and support shall be designed according to A.4.

H.7 Report

A report shall be prepared and supplied.

H.7.1 Report for shake-table test

The report shall be in accordance with A.5.

Pretest circuit switcher open and close timing characteristics and resistance readings shall be included. A list of circuits, which were monitored during the tests, shall also be included.

H.7.2 Report for dynamic or static coefficient analysis

The report shall be in accordance with A.6.

H.8 Frequency or damping modifying devices or attachments

The circuit switcher shall comply with A.7.

H.9 Seismic identification plate

A seismic identification plate shall be attached to each piece of equipment supplied. The plate shall be as specified in A.8.

Copyright © 2006 IEEE. All rights reserved.

Copyright The Institute of Electrical and Electronics Engineers, Inc.
Provided by IHS under license with IEEE
No reproduction or networking permitted without license from IHS
Not for Resale

Annex I

(normative)

Suspended equipment

I.1 General

Equipment shall only be considered suspended if

a) It is provided with suspension points and restraint points.

b) There are provisions to control the movement of the equipment horizontally and vertically.

c) The system complies with 6.7.

Suspending thyristor valves is a recommended method of support. However, thyristor valves are out of the scope of this annex.

Seismic qualification levels are given in I.1.1 through I.1.3.

I.1.1 High seismic qualification level

The requirements of Annex I, with the exception of I.1.2 and I.1.3, are applicable to all suspended equipment in high seismic qualification level areas.

I.1.2 Moderate seismic qualification level

The requirements of Annex I, with the exception of I.1.1 and I.1.3, are applicable to all suspended equipment in moderate seismic qualification level areas.

I.1.3 Low seismic qualification level

Only the requirements of A.1.1.4 are applicable to suspended equipment in low seismic qualification level areas. The user should refer to Clause 1 through Clause 8 for information.

I.1.4 Load carrying components

I.1.4.1 through I.1.4.3 define the load-carrying components of the equipment.

Copyright © 2006 IEEE. All rights reserved.

--`,,```,,,,````-`-`,,`,,`,`,,`---

Copyright The Institute of Electrical and Electronics Engineers, Inc.
Provided by IHS under license with IEEE
No reproduction or networking permitted without license from IHS Not for Resale

I.1.4.1 Suspension point(s)

Suspension point(s) are attachment part(s) from which the equipment is suspended. There may be more than one suspension point. The equipment manufacturer shall supply suspension point(s). The user will supply suspension systems beyond the suspension point(s).

I.1.4.2 Restraint point(s)

Restraint point(s) are attachment point(s) from which lateral restraint is provided. An external component, such as a cable, will limit the deflection of the equipment under the action of lateral loads, such as winds or earthquakes, and will be attached to the restraint point(s). There shall be at least one restraint point. A restraint point may be coincident with a suspension point. The manufacturer shall supply restraint point(s). The user will supply restraint systems beyond the restraint point(s).

I.1.4.3 Load-carrying structure

The load-carrying structure is the equipment's component or components through which the suspension points and restraint points are transmitted. The load-carrying structure may include the components, which provide the function of the equipment, such as the insulator units or electrical component housings, or may be structural components, such as rods or other members, whose only function is to transmit these loads.

I.2 Operational requirements

The equipment, including the suspension point(s), load-carrying structure, and restraint point(s), shall be designed so that there will be neither damage nor loss of function during and after a seismic event. In addition, equipment shall maintain the correct operational status during the seismic event.

I.3 Seismic qualification method

The seismic withstand capability shall be demonstrated by static analysis in accordance with the method described hereinafter.

I.4 Qualification procedure—static analysis

The equipment will be installed in a suspended configuration. The entire weight will be carried from one or more suspension points of the equipment. The equipment will be restrained laterally at one or more restraint points on the equipment.

Suspension point(s), restraint point(s), and the load-carrying structure shall be capable of supporting the loads described in I.4.1 through I.4.3.

Copyright © 2006 IEEE. All rights reserved.
--`,,```,,,,````-`-`,,`,,`,`,,`---

Copyright The Institute of Electrical and Electronics Engineers, Inc.
Provided by IHS under license with IEEE
No reproduction or networking permitted without license from IHS
Not for Resale

I.4.1 Suspension point(s)

Each suspension point shall be capable of supporting and transmitting the following combined vertical and horizontal loads from where the suspension point attaches to the load-carrying structure to where the suspension point attaches to the cable or other external supporting component:

a) Vertical positive (upward) load equal to the following values times the weight of the equipment appropriately distributed to the suspension points, if more than one point, plus any positive vertical normal operating load carried by the suspension point.

   1) 5 for the high seismic qualification level

   2) 3.5 for the moderate seismic qualification level

b) Horizontal load equal to the following values times the weight of the equipment appropriately distributed to the suspension points, if more than one point, applied in both principal horizontal axes, plus any horizontal normal operating load carried by the suspension point.

   1) 0.5 for the high seismic qualification level

   2) 0.25 for the moderate seismic qualification level

I.4.2 Restraint point(s)

Restraint point(s) shall be positioned such that they can restrain horizontal movement. Restraint point(s) may induce additional vertical and horizontal load. Restraint point(s) shall not induce torsion or other unbalanced loads [i.e., the restraint point(s) shall be "balanced" with the suspension point(s)]. Each restraint point shall be capable of resisting and transmitting the following combined vertical and horizontal loads from where the restraint point attaches to the load-carrying structure to where the restraint point attaches to the cable or another external restraining component:

a) Vertical negative (downward) load equal to the following values times the weight of the equipment distributed according to the laws of statics to the restraint point(s), plus any vertical normal operating load carried by the restraint point(s). (The vertical load includes dynamic loads and preloads.)

   1) 4 for the high seismic qualification level

   2) 2.5 for the moderate seismic qualification level

b) Horizontal load equal to the following values times the weight of the equipment applied in both principal horizontal axes and distributed according to the laws of statics to the restraint point(s), plus any horizontal normal operating load carried by the restraint point(s).

   1) 0.5 for the high seismic qualification level

   2) 0.25 for the moderate qualification level

The manufacturer shall notify the user of any restrictions in preload.

Copyright © 2006 IEEE. All rights reserved.

--`,,```,,,,````-`-`,,`,,`,`,,`---

Copyright The Institute of Electrical and Electronics Engineers, Inc.
Provided by IHS under license with IEEE
No reproduction or networking permitted without license from IHS
Not for Resale

I.4.3 Load-carrying structure

The load-carrying structure, which can be an equipment structure or an independent structure, shall be capable of transmitting the combined vertical and horizontal loads from the suspension point(s) to the restraint point(s).

For the analysis, the load-carrying structure shall be treated as a free-body with the boundary suspension point(s) and the boundary restraint point(s) assumed to be supported and the loads required by I.4.1 and I.4.2 applied horizontally and vertically through the load-carrying structure, as illustrated in Figure I.1.

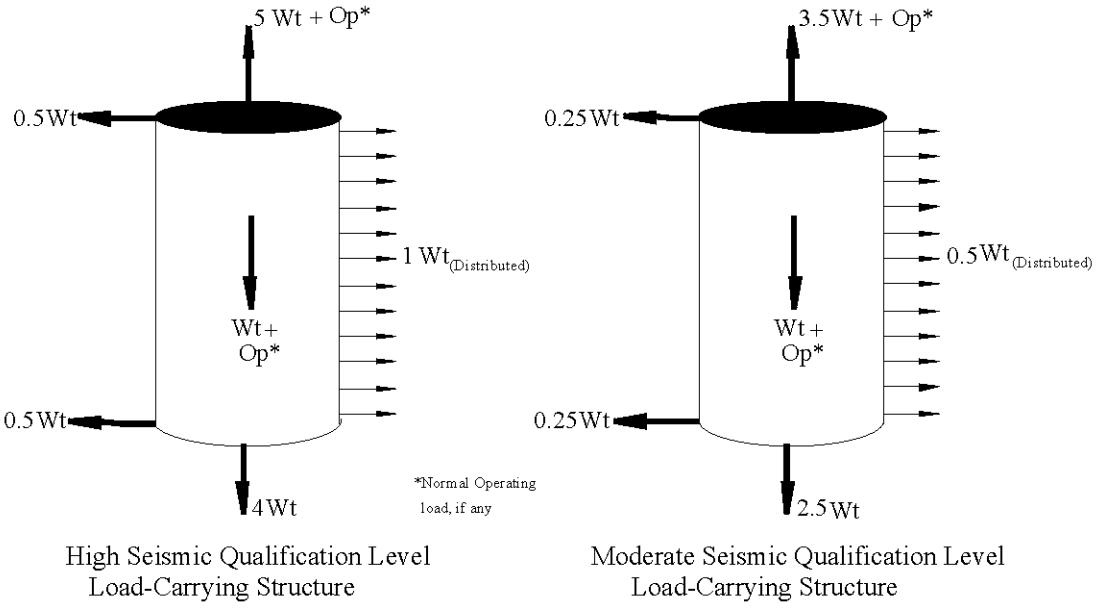

Figure I.1—Illustration of loads on suspended equipment

The load-carrying structure shall be analyzed using the following values times the equipment's weight distributed according to its actual weight distribution, applied simultaneously in both principal horizontal axes, simultaneously with the vertical loads required in I.4.1 and I.4.2.

a) 1.0 for the high seismic qualification level

b) 0.5 for the moderate seismic qualification level

I.5 Acceptance criteria

The qualification will be considered acceptable, if the acceptance criteria of A.2 are met.

I.6 Design requirements

The connections shall be designed according to A.2.1 and A.4.

Copyright © 2006 IEEE. All rights reserved.

Copyright The Institute of Electrical and Electronics Engineers, Inc.
Provided by IHS under license with IEEE
No reproduction or networking permitted without license from IHS
Not for Resale

I.7 Report

A report shall be prepared and supplied in accordance with A.6, except that the seismic outline drawing requirements given below shall be used in lieu of the requirements of A.6.2.

a) The supplier shall supply one 280 mm × 432 mm (11 in × 17 in), A3, 216 mm × 280 mm (8.5 in × 11 in), or A4 seismic outline drawing of the equipment.

b) An outline drawing of the equipment, including overall dimension, weights, and location of the center of gravity of the equipment.

c) Connection details showing bolt and weld sizes, if applicable, and their corresponding locations.

d) Suspension and restraint point locations.

e) The method used to qualify the equipment, including the acceleration levels used (i.e., 0.5*g*).

I.8 Seismic identification plate

A seismic identification plate shall be attached to each piece of equipment supplied. The plate shall be as specified in A.8.

Copyright © 2006 IEEE. All rights reserved.

--`,,```,,,,````-`-`,,`,,`,`,,`---

Copyright The Institute of Electrical and Electronics Engineers, Inc.
Provided by IHS under license with IEEE
No reproduction or networking permitted without license from IHS
Not for Resale

Annex J

(normative)

Station batteries and battery racks

J.1 General

Battery racks, as used in this annex, refers to the load-carrying structure, which may consist of stacked, steel-encased cell modules or open-frame multi-tier or multi-step racks.

Seismic qualification levels are given in J.1.1 through J.1.3.

J.1.1 High seismic qualification level

The requirements of Annex J, with exception of J.1.2 and J.1.3, are applicable to all station batteries and battery racks in high seismic qualification level areas.

J.1.2 Moderate seismic qualification level

The requirements of Annex J, with exception of J.1.1 and J.1.3, are applicable to all station batteries and battery racks in moderate seismic qualification level areas.

J.1.3 Low seismic qualification level

Only the requirements of A.1.1.4 are applicable to station batteries and battery racks specified for use in low seismic qualification level areas. The user should refer to Clause 1 through Clause 8 for information.

J.2 Operational requirements

The station battery rack shall be designed so that there will be neither battery damage nor lost of battery function during and after the seismic event.

Copyright © 2006 IEEE. All rights reserved.

Copyright The Institute of Electrical and Electronics Engineers, Inc.
Provided by IHS under license with IEEE
No reproduction or networking permitted without license from IHS
Not for Resale

J.3 Seismic qualification method

J.3.1 Station batteries

Station batteries are qualified if they meet the requirements given in J.6.1.

J.3.2 Other batteries

Non-station batteries are qualified if they meet the requirements given in J.6.2.

J.3.3 Battery racks

The seismic withstand capability of battery racks shall be demonstrated as follows:

a)	Non-rigid racks of three or more stacks.	By time history shake-table testing.	J.4.1
b)	Non-rigid racks of two stacks.	By dynamic analysis.	J.4.2
c)	Rigid racks and all racks of one stack.	By static analysis.	J.4.3

J.4 Qualification procedure

The qualification shall be conducted according to the requirements of A.1.1 and J.4.1 through J.4.3.

J.4.1 Time history test

Battery racks shall be qualified in accordance with the requirements of A.1.2.2. The rack that is tested shall have a full complement of batteries, interconnected in their *in situ* configuration. Cells shall be mounted in the battery rack or a representative section of the battery rack, if approved by the user.

A resonant frequency search shall be performed according to the requirements of A.1.2.1.

J.4.1.1 Monitoring requirements

During time history testing, critical locations on the battery rack assembly shall be monitored for maximum displacements, maximum accelerations, and maximum stresses. Monitoring requirements shall be in accordance with A.2.8 and the following:

a) Maximum displacements: Top of battery rack assembly and connection points.

b) Maximum accelerations: Vertical and horizontal at the top of the rack.

c) Maximum stresses: Anchor bolt locations and base of rack.

Copyright © 2006 IEEE. All rights reserved.
--`,,```,,,,````-`-`,,`,,`,`,,`---

Copyright The Institute of Electrical and Electronics Engineers, Inc.
Provided by IHS under license with IEEE
No reproduction or networking permitted without license from IHS
Not for Resale

J.4.2 Dynamic analysis

Battery racks shall be qualified in accordance with A.1.3.3.

J.4.3 Static analysis

Battery racks shall be qualified according to the requirements of A.1.3.1.

J.5 Acceptance criteria

The qualification will be considered acceptable if the criteria given in J.5.1 and J.5.2 are met.

J.5.1 General

The general criteria of A.2 or A.3 as applicable to the qualification method.

J.5.2 Functional requirements for shake-table tested equipment

The equipment shall meet the requirements of A.2.5. The battery rack shall effectively restrain the battery cells without impacting rack restraints.

J.6 Design requirements

Batteries are considered inherently acceptable; however, they must be properly installed.

J.6.1 Station batteries

When station batteries are mounted in a seismically qualified battery rack, the battery cells, or multi-cell modules, will be seismically qualified when the following criteria are met:

a) All connections between cells and multi-cell modules shall be of the bolted type.

b) Batteries shall employ spacers to maintain the correct separation between cells or multi-cell units.

c) Horizontal restraints on the battery rack shall be designed to prevent the cells from impacting the restraints. The restraints shall be positioned to prevent the cells from falling or toppling from the rack.

d) Terminal cable connectors and cable connections between different levels or rows of cells shall have adequate slack to accommodate movement of the rack and conductor anchor points.

e) Long cable runs, for example, from the battery's main terminal to the load or between racks on the opposite side of the battery room, shall be supported close to the battery connection to reduce stress on the battery terminal.

Copyright © 2006 IEEE. All rights reserved.

--`,,```,,,,````-`-`,,`,,`,`,,`---

Copyright The Institute of Electrical and Electronics Engineers, Inc.
Provided by IHS under license with IEEE
No reproduction or networking permitted without license from IHS
Not for Resale

J.6.2 Other batteries

When non-station batteries are mounted in a seismically qualified battery rack, the battery cells, or multi-cell modules, will be seismically qualified when the batteries are restrained to their support structure and are prevented from impacting their restraints. Battery terminal connections similar to those used on automobile batteries are acceptable.

J.6.3 Battery racks

The battery rack shall be mounted to a structural floor with sufficient strength to resist lateral and overturning loads according to A.4. If the mounting surface is not at grade, the dynamic amplification of the battery rack support must be used to modify the RRS. The structure's materials must withstand dead and seismic stress imposed by the mass of the battery.

J.7 Report

A report shall be prepared and supplied in accordance with A.5 or A.6 as applicable.

J.8 Frequency or damping modifying devices or attachment

The requirements of A.7 shall be met.

J.9 Seismic identification plate

A seismic identification plate shall be supplied with each battery rack. The plate shall be as specified in A.8.

Copyright © 2006 IEEE. All rights reserved.

Copyright The Institute of Electrical and Electronics Engineers, Inc.
Provided by IHS under license with IEEE
No reproduction or networking permitted without license from IHS
Not for Resale

Annex K

(normative)

Surge arresters

K.1 General

The voltage kV, as used in this annex, is the duty cycle voltage rating as defined in IEEE Std C62.11. Duty cycle rating is defined as the designated maximum permissible root-mean-square (rms) value of power-frequency voltage between its line and ground terminals at which it is designed to perform its duty cycle.

These requirements are applicable to all free-standing surge arresters.

Seismic qualification levels are given in K.1.1 through K.1.3.

K.1.1 High seismic qualification level

The requirements of Annex K, with the exception of K.1.2 and K.1.3, are applicable to all surge arresters in high seismic qualification level areas.

K.1.2 Moderate seismic qualification level

The requirements of Annex K, with the exception of K.1.1 and K.1.3, are applicable to all surge arresters in moderate seismic qualification level areas.

K.1.3 Low seismic qualification level

Only the requirements of A.1.1.4 are applicable to surge arresters in low seismic qualification level areas. The user should refer to Clause 1 through Clause 8 for information.

K.2 Operational requirements

The equipment and supporting structure shall be designed so that there will be neither damage nor loss of function during and after the seismic event. Additionally, equipment shall maintain correct operational states during the seismic event.

Copyright © 2006 IEEE. All rights reserved.

Copyright The Institute of Electrical and Electronics Engineers, Inc.
Provided by IHS under license with IEEE
No reproduction or networking permitted without license from IHS
Not for Resale

K.3 Seismic qualification methods

The seismic withstand capability, where the kV rating is a measure of the duty cycle voltage rating, shall be demonstrated by:

a)	90 kV DCV and above.	By time history shake-table testing.	K.4.1
b)	54 kV DCV to less than 90 kV DCV.	By dynamic analysis.	K.4.2
c)	35 kV DCV to less than 54 kV DCV.	By static coefficient analysis.	K.4.3
d)	Less than 35 kV DCV.	By Inherently acceptable.	K.4.4

K.4 Qualification procedures

The qualification procedures shall be in accordance with the requirements of A.1.1.

K.4.1 Time history shake-table testing

Surge arresters to be shake-table tested shall be tested according to the requirements of A.1.2.2.
A resonant frequency search shall be performed according to the requirements of A.1.2.1.

K.4.1.1 Monitoring requirements

Critical locations on the surge arresters and the supporting structure shall be monitored for maximum displacement, maximum accelerations, and maximum stresses. Monitoring requirements shall be in accordance with A.2.8 and the following:

a) Maximum displacement: Top of equipment

b) Maximum accelerations: Top of equipment (vertical and horizontal)

c) Maximum stresses: Bottom end of porcelain surge arrester, bottom metal end fitting, and base of supporting structure

K.4.1.2 Post shake-table testing

The equipment shall undergo standard electrical production tests as defined by IEEE Std C62.11 after the completion of the shake-table tests. In addition, devices that are pressurized or sealed against atmospheric contamination shall be tested to ensure seal integrity.

K.4.2 Dynamic analysis

The surge arresters to be dynamically analyzed shall be analyzed according to the requirements of A.1.3.3.

Copyright © 2006 IEEE. All rights reserved.

Copyright The Institute of Electrical and Electronics Engineers, Inc.
Provided by IHS under license with IEEE
No reproduction or networking permitted without license from IHS
Not for Resale

K.4.3 Static coefficient analysis

The qualification procedure shall be according to the requirements of A.1.3.2. The static coefficient may be taken as 1.0.

K.4.4 Inherently acceptable

The qualification procedure shall be according to the requirements of A.1.4.

K.5 Acceptance criteria

The qualification will be considered acceptable if the requirements given in K.5.1 and K.5.2 are met.

K.5.1 General

The general requirements are as follows:

a) The general criteria of A.2.1 and A.2.2.

b) For the shake-table test, the time history test requirements of A.2.3.

c) For the dynamic analysis, the requirements of A.2.7.

d) For static coefficient analysis, the requirements of A.2.7.

K.5.2 Functional requirements for shake-table tested equipment

The equipment shall meet the requirements of A.2.2.1.

For shake-table tested surge arresters, the equipment shall maintain the correct operational state during the seismic event. Confirmation of this requirement shall entail passage of standard production electrical and mechanical tests as defined by IEEE Std C62.11 after completion of any shake-table tests.

K.6 Design requirements

The equipment and supports shall be designed according to A.4.

K.7 Report

A report shall be prepared and supplied in accordance with A.5 or A.6, as appropriate.

Copyright © 2006 IEEE. All rights reserved.

--`,,```,,,,````-`-`,,`,,`,`,,`---

Copyright The Institute of Electrical and Electronics Engineers, Inc.
Provided by IHS under license with IEEE
No reproduction or networking permitted without license from IHS
Not for Resale

K.8 Frequency or damping modifying devices or attachments

The requirements of A.7 shall be met when applicable.

K.9 Seismic identification plate

A seismic identification plate shall be attached to each piece of equipment supplied. The plate shall be as specified in A.8.

Copyright © 2006 IEEE. All rights reserved.

Copyright The Institute of Electrical and Electronics Engineers, Inc.
Provided by IHS under license with IEEE
No reproduction or networking permitted without license from IHS
Not for Resale

Annex L

(normative)

Substation electronic devices, distribution panels and switchboards, and solid-state rectifiers

L.1 General

These requirements are applicable to the following substation electronic devices (SEDs):

a) Remote terminal units (RTUs)
b) Digital fault recorders (DFRs)
c) Sequence of events recorders (SERs)
d) Intelligent electronic devices (IEDs)

These requirements are also applicable to distribution panels and switchboards for ac and dc power and solid-state rectifiers for battery charging.

Seismic qualification levels are given in L.1.1 through L.1.3.

L.1.1 High seismic qualification level

The requirements of Annex L, with the exception of L.1.2 and L.1.3, are applicable to all equipment listed in L.1 in high seismic qualification level areas.

L.1.2 Moderate seismic qualification level

The requirements of Annex L, with the exception of L.1.1 and L.1.3, are applicable to all equipment listed in L.1 in moderate seismic qualification level areas, except an acceleration of 0.75*g* may be used for static analysis, as specified in L.4.2, instead of 1.5*g*.

L.1.3 Low seismic qualification level

Only the requirements of A.1.1.4 are applicable to all equipment listed in L.1 in low seismic qualification level areas. The user should refer to Clause 1 through Clause 8 for information.

Copyright © 2006 IEEE. All rights reserved.

Copyright The Institute of Electrical and Electronics Engineers, Inc.
Provided by IHS under license with IEEE
No reproduction or networking permitted without license from IHS
Not for Resale

L.2 Operational requirements

The equipment and supporting structure shall be designed so that there will be neither damage nor loss of function during and after a seismic event.

L.3 Seismic qualification method

The seismic withstand capability shall be demonstrated by time history shake-table testing for the RTUs and IEDs. The seismic withstand capability of all other equipment listed in L.1 shall be demonstrated as follows:

a) The internal components may be qualified by experience-based qualification.

b) The panels or cubicles and their hold down fittings shall be qualified by static analysis.

L.4 Qualification procedure

The qualification procedure shall be according to the requirements of A.1.1.

L.4.1 RTU and IED qualification procedure

The RTUs and IEDs shall be tested according to the requirements of A.1.2.2.

A resonant frequency search shall be performed according to the requirements of A.1.2.1.

L.4.2 Equipment listed in L.1, except RTUs and IEDs, qualification procedure

All equipment listed in L.1, except RTUs and IEDs, shall be analyzed according to the requirements of A.1.3.1 at 1.5*g*.

L.5 Acceptance criteria

The qualification will be considered acceptable, if the following requirements in L.5.1 through L.5.2 are met.

L.5.1 General

The general requirements are as follows:

a) The general criteria of A.2.1 and A.2.2.

Copyright © 2006 IEEE. All rights reserved.

--`,,```,,,,````-`-`,,`,,`,`,,`---

Copyright The Institute of Electrical and Electronics Engineers, Inc.
Provided by IHS under license with IEEE
No reproduction or networking permitted without license from IHS Not for Resale

b) For the RTUs and IEDs, the requirement of A.2.3.

c) For all equipment listed in L.1, except RTUs and IEDs, the requirements of A.2.7.

L.5.2 Functional requirements for shake-table tested equipment

The equipment shall meet the requirements of A.2.2.1

The following shall be carried out in sequence:

a) Before the shake-table tests, the RTU or IED shall be tested by simulating all of its functions. Appropriate signals shall be injected to inputs, and all outputs shall be monitored for correct operation. Also, noise testing shall be conducted with the latest revisions to the applicable standard as follows:

   1) Surge withstand capability and fast transient tests in accordance with ANSI C37.90.1.

   2) Radiated radio frequency wave test in accordance with ANSI C37.90.2.

   3) Radiated transient voltage tests in accordance with IEEE Std 518.

b) Only monitoring of critical circuits for relay bounce shall be carried out during the shake-table tests. Any failures shall be noted.

c) After the shake-table tests, the functional and noise tests in item a) shall be repeated. Also, all components shall be inspected to ensure that no components have shaken loose or broken off, and that they are securely in their sockets. The integrity of the wiring shall also be checked. Any failures shall be noted.

Inspection per item c) may also be carried out before the testing per item a), but only to ensure the correct state of components within the device. However, no attempt shall be made to press down components within their sockets.

L.6 Design requirements

All equipment listed in L.1 shall be designed according to A.4.

L.7 Report

The following reports shall be prepared and supplied:

a) For RTU and IED, a report in accordance with A.5.

b) For all equipment listed in L.1, except RTUs and IEDs, a report in accordance with A.6.

L.8 Frequency or damping modifying devices or attachments

The requirements of A.7 shall apply.

L.9 Seismic identification plate

A seismic identification plate shall be attached to each piece of equipment supplied. The plate shall be as specified in A.8.

Copyright © 2006 IEEE. All rights reserved.
--`,,```,,,,````-`-`,,`,,`,`,,`---

Copyright The Institute of Electrical and Electronics Engineers, Inc.
Provided by IHS under license with IEEE
No reproduction or networking permitted without license from IHS
Not for Resale

Annex M

(normative)

Metalclad switchgear

M.1 General

The voltage kV, as used in this annex, is the rated maximum voltage, as defined in IEEE Std C37.20.2-1999.

Seismic qualification levels are given in M.1.1 through M.1.3.

M.1.1 High seismic qualification level

The requirements of Annex M, with the exception of M.1.2 and M.1.3, are applicable to all voltage levels of indoor and outdoor metalclad switchgear in high seismic qualification level areas.

M.1.2 Moderate seismic qualification level

The requirements of Annex M, with the exception of M.1.1 and M.1.3, are applicable to all voltage levels of indoor and outdoor metalclad switchgear in moderate seismic qualification level areas.

M.1.3 Low seismic qualification level

Only the requirements of A.1.1.4 are applicable to all voltage levels of indoor and outdoor metalclad switchgear in low seismic qualification level areas. The user should refer to Clause 1 through Clause 8 for information.

M.2 Operational requirements

The completely assembled and installed equipment shall be designed so that there will be neither damage nor loss of function during and after a seismic event. In addition, metalclad switchgear and equipment installed in the switchgear shall maintain the correct operational state during a seismic event.

M.3 Seismic qualification method

Metalclad switchgear installations design shall be verified by the following:

a)	35 kV and above.	By dynamic analysis.	M.4.1
b)	Less than 35 kV.	By inherently acceptable.	M.4.2

Copyright © 2006 IEEE. All rights reserved.

--`,,```,,,,````-`-`,,`,,`,`,,`---

Copyright The Institute of Electrical and Electronics Engineers, Inc.
Provided by IHS under license with IEEE
No reproduction or networking permitted without license from IHS

Not for Resale

M.4 Qualification procedure

The qualification procedures shall be in accordance with the requirements of A.1.1.

M.4.1 Dynamic analysis

Dynamic analysis shall be according to the requirements of A.1.3.3.

M.4.2 Inherently acceptable

The qualification procedure shall be according to the requirements of A.1.4.

M.5 Acceptance criteria

The qualification will be considered acceptable, if the following requirements given in M.5.1 and M.5.2 are met.

M.5.1 General

The general requirements are as follows:

a) The general criteria requirements of A.2.1 and A.2.2.
b) For the dynamic and static analysis, the requirements of A.2.7.

M.5.2 Functional requirements for shake-table tested equipment

The equipment shall meet the requirements of A.2.2.1.

The equipment shall function adequately from a structural viewpoint. The removable circuit breaker and instrumentation units shall operate normally, and the tolerances and other critical dimensions in the equipment shall not change unacceptably. To avoid unwanted tripping of circuit breakers or false alarms, there shall be no malfunctioning protection and control devices or circuits.

Furthermore, the equipment shall meet all electrical functional and operational requirements before and after tests as defined in the applicable clauses of IEEE Std C37.20.2-1999.

M.6 Design requirements

The complete components installation shall be designed in accordance with A.4. Other sections of this recommended practice may apply to individual devices or equipment of this installation.

Copyright © 2006 IEEE. All rights reserved.

Copyright The Institute of Electrical and Electronics Engineers, Inc.
Provided by IHS under license with IEEE
No reproduction or networking permitted without license from IHS
Not for Resale

M.7 Report

An analysis report shall be prepared and supplied in accordance with A.6, including subparagraphs pertaining to data and the seismic outline drawing.

M.8 Frequency or damping modifying devices or attachments

The requirements of A.7 shall be met.

M.9 Seismic identification plate

A seismic identification plate shall be attached to each piece of equipment supplied. The plate shall be as specified in A.8.

Copyright © 2006 IEEE. All rights reserved.

--`,,```,,,,````-`-`,,`,,`,`,,`---

Copyright The Institute of Electrical and Electronics Engineers, Inc.
Provided by IHS under license with IEEE
No reproduction or networking permitted without license from IHS

Not for Resale

Annex N

(normative)

Cable terminators (potheads)

N.1 General

The voltage kV, as used in this annex, is the rated maximum voltage, as defined in ANSI C37.06-2000.

Seismic qualification levels are as given in N.1.1 through N.1.3.

N.1.1 High seismic qualification level

The requirements of Annex N, with the exception of N.1.2 and N.1.3, are applicable to all cable terminators (potheads) in high seismic qualification level areas.

N.1.2 Moderate seismic qualification level

The requirements of Annex N, with the exception of N.1.1 and N.1.3, are applicable to all cable terminators (potheads) in moderate seismic qualification level areas.

N.1.3 Low seismic qualification level

Only the requirements of A.1.1.4 are applicable to cable terminators (potheads) in low seismic qualification level areas. The user should refer to Clause 1 through Clause 8 for information.

N.2 Operational requirements

The cable terminators (potheads) and supporting structures shall be designed so that there will be neither damage nor loss of function during and after the seismic event. Cable terminations shall include any cantilever loads acting on pothead porcelains due to seismic disturbance.

N.3 Seismic qualification method

a)	220 kV and above.	By time history shake-table testing.	N.4.1
b)	35 kV to less than 220 kV.	By pull test.	N.4.2
c)	Less than 35 kV.	By inherently acceptable.	N.4.3

Copyright © 2006 IEEE. All rights reserved.

Copyright The Institute of Electrical and Electronics Engineers, Inc.
Provided by IHS under license with IEEE
No reproduction or networking permitted without license from IHS
Not for Resale

N.4 Qualification procedure

The qualification procedure shall be according to the requirements of A.1.1.

N.4.1 Time history shake-table testing

The qualification procedure shall be according to the requirements of A.1.2.2.

A resonant frequency search shall be performed according to the requirements of A.1.2.1.

N.4.2 Pull test

The qualification procedure shall be as defined in A.1.2.4.

N.4.3 Inherently acceptable

The qualification procedure shall be according to the requirements of A.1.4.

N.4.4 Monitoring requirements

Critical locations on the potheads and supporting structure shall be monitored for maximum displacement, maximum accelerations, and maximum stresses. Monitoring requirements shall be in accordance with A.2.8 and the following:

a) Maximum displacement: Top of the potheads.

b) Maximum accelerations (vertical and horizontal): Top of the potheads. (If qualified by shake-table test.)

c) Maximum stresses: Bottom end of porcelain pothead and base of the supporting structure.

N.4.5 Post-shake-table testing

The potheads shall undergo standard electrical production tests after the completion of the shake-table tests. In addition, potheads that are sealed against atmospheric contamination shall not leak during or after the shake-table tests.

N.5 Acceptance criteria

The qualification will be considered acceptable, if the following requirements given in N.5.1 and N.5.2 are met.

Copyright © 2006 IEEE. All rights reserved.

Copyright The Institute of Electrical and Electronics Engineers, Inc.
Provided by IHS under license with IEEE
No reproduction or networking permitted without license from IHS
Not for Resale

N.5.1 General

The general requirements are as follows:

a) The general requirements of A.2.1 and A.2.2.

b) For the time history test, the requirements of A.2.3.

c) For the pull test, the requirements of A.2.5.

N.5.2 Functional requirements for shake-table tested equipment

The equipment shall meet the requirements of A.2.2.1.

The shake-table tested potheads (cable terminators) shall pass the following electrical requirements as defined in IEEE Std 48-1996:

a) Visual inspection. There shall be no damage or cracks in any part, including the porcelain, and no oil leakage before or after the shake-table test.

b) Mechanical efficiency of seal temperature rise.

c) Power frequency withstand voltage.

d) Power frequency flash over.

e) Impulse withstand voltage.

f) Capacitance measurements.

g) Ionization measurements.

h) Radio influence.

i) Pressure (leak).

N.6 Design requirements

The potheads and support shall be designed to the specifications given in A.4.

N.7 Report

A report shall be prepared and supplied in accordance with A.5.

N.8 Frequency or damping modifying devices or attachments

The requirements of A.7 shall be met.

N.9 Seismic identification plate

Supplier shall attach a seismic identification plate to each pothead. The plate shall be as specified in A.8.

Copyright © 2006 IEEE. All rights reserved.

Copyright The Institute of Electrical and Electronics Engineers, Inc.
Provided by IHS under license with IEEE
No reproduction or networking permitted without license from IHS
Not for Resale

Annex O

(normative)

Capacitors, series, and shunt compensation

O.1 General

The voltage kV, as used for shunt compensation banks and for series compensation banks in this annex, is the system nominal voltage as defined in IEEE Std 1036-1992 and IEEE Std 824-1994, respectively.

Seismic qualification levels are given in O.1.1 through O.1.3.

O.1.1 High seismic qualification level

The requirements of Annex O, with the exception of O.1.2 and O.1.3, are applicable to all series and shunt bank assemblies in high seismic qualification level areas.

O.1.2 Moderate seismic qualification level

The requirements of Annex O, with the exception of O.1.1 and O.1.3, are applicable to all series and shunt bank assemblies in moderate seismic qualification level areas.

O.1.3 Low seismic qualification level

Only the requirements of A.1.1.4 are applicable to series and shunt banks in low seismic qualification level areas. The user should refer to Clause 1 through Clause 8 for information.

O.2 Operational requirements

Series and shunt compensation installations shall be designed so that there will be no permanently disabling functional damage as a result of the seismic event.

O.3 Seismic qualification method

Seismic withstand capability shall be demonstrated as follows:

a)	230 kV and above.	By dynamic analysis.	O.4.1
b)	38 kV to less than 230 kV.	By static coefficient analysis.	O.4.2
c)	Less than 38 kV.	By inherently acceptable.	O.4.3

Copyright © 2006 IEEE. All rights reserved.

Copyright The Institute of Electrical and Electronics Engineers, Inc.
Provided by IHS under license with IEEE
No reproduction or networking permitted without license from IHS
Not for Resale

O.4 Qualification procedure

The qualification procedure shall be according to the requirements of A.1.1.

O.4.1 Dynamic analysis

Series and shunt compensation banks to be dynamically analyzed shall be analyzed in accordance with the requirements of A.1.3.3.

O.4.2 Static coefficient analysis

The qualification procedure shall be in accordance with A.1.3.2. The static coefficient may be taken as 1.0.

O.4.3 Inherently acceptable

The qualification procedure shall be in accordance with A.1.4.

O.5 Acceptance criteria

The qualification will be considered acceptable if the requirements of A.2.7 are met.

O.6 Design requirements

The complete compensation installation shall be designed in accordance with A.4.

O.7 Report

A report shall be prepared in accordance with A.6.

O.8 Frequency or damping modifying devices or attachments

The requirements of A.7 shall be met.

O.9 Seismic identification plate

A seismic identification plate shall be attached to each bank supplied. The plate shall be as specified in A.8.

Copyright © 2006 IEEE. All rights reserved.

Copyright The Institute of Electrical and Electronics Engineers, Inc.
Provided by IHS under license with IEEE
No reproduction or networking permitted without license from IHS
Not for Resale

Annex P

(normative)

Gas-insulated switchgear

P.1 General

The voltage kV, as used in this annex, is the rated max voltage, phase to phase, kV rms voltage rating as defined in IEEE Std C37.122-1993. Seismic qualification levels are given in P.1.1 through P.1.3.

P.1.1 High seismic qualification level

The requirements of Annex P, with the exception of P.1.2 and P.1.3, are applicable to all gas-insulated equipment in high seismic qualification level areas.

P.1.2 Moderate seismic qualification level

The requirements of Annex P, with the exception of P.1.1 and P.1.3, are applicable to all gas-insulated equipment in moderate seismic qualification level areas.

P.1.3 Low seismic qualification level

Only the requirements of A.1.1.4 are applicable to gas-insulated equipment in low seismic qualification level areas. The user should refer to Clause 1 through Clause 8 for information.

P.2 Operational requirements

The equipment and supporting structure shall be designed so that there will be neither damage nor loss of function during and after the seismic event. Additionally, equipment shall maintain the correct operational states during the seismic event.

P.3 Seismic qualification methods

The seismic withstand capability, where the kV rating is a measure of the system voltage rating, as defined in Table 1 of IEEE Std C37.122-1993 shall be demonstrated by:

a)	169 kV and above.	By time history shake-table testing.	P.4.1
b)	121 kV to less than 169 kV.	By dynamic analysis.	P.4.2
c)	35 kV to less than 121 kV	By static coefficient analysis.	P.4.3
d)	Less than 35 kV.	By inherently acceptable.	P.4.4

Copyright © 2006 IEEE. All rights reserved.

Copyright The Institute of Electrical and Electronics Engineers, Inc.
Provided by IHS under license with IEEE
No reproduction or networking permitted without license from IHS
Not for Resale

P.4 Qualification procedures

The qualification procedures shall be in accordance with the requirements of A.1.1.

Equipment too large to fit on the shake-table may be modified as detailed in 4.10.

P.4.1 Time history shake-table testing

The qualification procedure shall be in five stages:

a) *Stage 1: Resonant frequency search*. A resonant frequency search shall be conducted to determine resonant frequencies according to the requirements of A.1.2.1.

b) *Stage 2: Time history test*. The equipment and support structure shall be tested according to the requirements of A.1.2.2.

c) *Stage 3: Time history operational test*. The circuit breaker and support structure shall be subjected to the same test described above in stage 2 with the addition of a breaker open–close–open (O–C–O) operation, during the strong motion. Breaker operation should be initiated at approximately the time at which the normalized Arias Intensity of 50% of maximum is achieved for one of the horizontal components of motion. During this test, the breaker shall be filled with gas at the rated operating pressure.

d) *Stage 4: Sine beat test*. The equipment and support structure shall be tested according to the requirements of A.1.2.3.

e) *Stage 5: Resonant frequency search*. A resonant frequency search shall be conducted according to the requirements of A.1.2.1.

To prevent injury or damage from possible failure of pressurized components, test with protective barriers and other appropriate precautions, as needed. As a minimum, all precautions shall be in accordance with applicable laboratory and legal requirements.

P.4.1.1 Monitoring requirements

Critical locations on the switchgear and supporting structure shall be monitored during all stages required above and for each test run for maximum displacement, maximum accelerations, and maximum stresses. Monitoring requirements shall be in accordance with A.2.8 and the following:

a) Maximum displacement: Top of bushing.

b) Maximum accelerations: (vertical and horizontal) Top of bushing and center of gravity of each sub-equipment component (i.e., disconnect switch, surge arrester, etc.).

c) Maximum stresses: Base of bushing and maximum stress points, especially bends and connections. Base of supporting structure’s leg.

Copyright © 2006 IEEE. All rights reserved.

Copyright The Institute of Electrical and Electronics Engineers, Inc.
Provided by IHS under license with IEEE
No reproduction or networking permitted without license from IHS
Not for Resale

To detect relay bounce and to verify that false operation will not occur, the following components shall be energized and monitored during stage 2 and stage 3 tests:

a) The trip and close circuits and mechanism motor shall be energized.

b) The X and Y relay contacts and SF6 density switch contacts shall be monitored.

The timing characteristics of the circuit breaker and the measurement of the resistance of the current carrying parts shall be taken before the testing begins and as a minimum after completion of the last shake-table test. Pressure readings and sniff tests shall be made directly after each pressurized time history test to detect possible leaks.

The equipment and supports shall be inspected for cracking, buckling, or other types of failure or distress. Gaskets associated with support columns and bushings shall be inspected for evidence of slippage.

P.4.1.2 Production tests following shake-table testing

The switchgear shall undergo standard production tests after the completion of the shake-table tests.

P.4.2 Dynamic analysis

The qualification procedure shall be according to the requirements of A.1.3.3.

P.4.3 Static coefficient analysis

The qualification procedure shall be according to the requirements of A.1.3.2. The static coefficient may be taken as 1.0.

P.4.4 Inherently acceptable

The qualification procedure shall be in accordance with A.1.4.

P.5 Acceptance criteria

The qualification will be considered acceptable if the following requirements in P.5.1 and P.5.2 are met.

P.5.1 General

The general requirements are as follows:

a) The general criteria of A.2.1 and A.2.2. Also, there shall be no evidence of support column or bushing gasket slippage.

b) For the time history test, the requirements of A.2.3.

Copyright © 2006 IEEE. All rights reserved.

--`,,```,,,,````-`-`,,`,,`,`,,`---

Copyright The Institute of Electrical and Electronics Engineers, Inc.
Provided by IHS under license with IEEE
No reproduction or networking permitted without license from IHS
Not for Resale

c) For the sine beat test, the requirements of A.2.4.

d) For the dynamic and static coefficient analysis, the requirements of A.2.7.

P.5.2 Functional requirements for shake-table tested equipment

The equipment shall meet the requirements of A.2.2.1, C.5.2, E.5.2, F.5.2, K.5.2, and N.5.2 as applicable.

P.6 Design requirements

The equipment and support shall be designed according to A.4.

P.7 Report(s)

A report shall be prepared and supplied.

P.7.1 Report for shake-table test

The report shall be in accordance with A.5.

P.7.1.1 Timing and resistance

The circuit breaker's pre-test and post-test opening and closing-timing characteristics and resistance measurements of its current carrying parts shall be included in the report. Pre-test characteristics and measurements shall be provided before the beginning of the shake-table tests.

P.7.1.2 Circuits monitoring

A list of circuits that were monitored along with any indication of a change in status during the tests shall be included in the report.

P.7.2 Report for dynamic or static analysis

The report shall be in accordance with A.6.

P.8 Frequency or damping modifying devices or attachments

The requirements of A.7 shall be met.

Copyright © 2006 IEEE. All rights reserved.

Copyright The Institute of Electrical and Electronics Engineers, Inc.
Provided by IHS under license with IEEE
No reproduction or networking permitted without license from IHS
Not for Resale

P.9 Seismic identification plate

A seismic identification plate shall be attached to each piece of equipment supplied. The plate shall be as specified in A.8.

P.10 GIS features

The non-seismic requirements of IEEE Std C37.122-1993 shall be met.

Copyright © 2006 IEEE. All rights reserved.

Copyright The Institute of Electrical and Electronics Engineers, Inc.
Provided by IHS under license with IEEE
No reproduction or networking permitted without license from IHS
Not for Resale

Annex Q

(normative)

Experience-based qualification procedures for low-voltage substation equipment

Q.1 General

Low voltage ac and dc control, instrumentation, and power supply equipment are housed in or adjacent to substation control buildings. This type of equipment includes the following general categories:

a) Control, instrumentation, and relay panels and cabinets
b) Distribution panels and switchboards for ac and dc power
c) Solid-state rectifiers for battery charging
d) Solid-state inverters for uninterruptible power supply

The earthquake performance records of these categories of equipment have been studied in detail by the nuclear power industry through programs conducted by the Electric Power Research Institute (EPRI) and the Seismic Qualification Utility Group (SQUG). An extensive sample of these types of equipment has been compiled from some 24 strong motion earthquakes and over 100 earthquake-affected sites. For most of the equipment categories listed above, over 100 examples have been compiled of equipment items that experienced ground motion ranging from about 0.20*g* to over 0.50*g*. This database of earthquake experience is described in EPRI TR-102641 [B9]. The database demonstrates that certain types of standard commercial grade equipment can withstand at least moderate amplitude earthquake motion without damage as long as good practice is used in equipment installation.

Calculations to the specified qualification level shall be provided that demonstrate adequate anchorage to floors or walls. Positive attachment of all internal components to the enclosing cabinet or framing, and sufficient slack in attachments such as cable or conduit to accommodate anticipated sway under earthquake conditions, shall be provided.

A review procedure for installed equipment was developed for the nuclear industry by EPRI/SQUG to identify and eliminate credible sources of earthquake damage. This review procedure for the specific categories of equipment listed above is described in the Seismic Qualification Utility Group's Report [B10]. Although the review procedure is intended for installed equipment, it also may function as a design and installation guide for new equipment.

The EPRI/SQUG review procedure for the eight categories of equipment listed above may be adopted as an alternative to the rigorous seismic qualification methods of analysis or testing. In effect, use of this procedure waives rigorous seismic qualification where extensive experience in actual earthquakes indicates no tendency for damage in standard commercial-grade equipment.

Copyright © 2006 IEEE. All rights reserved.

Copyright The Institute of Electrical and Electronics Engineers, Inc.
Provided by IHS under license with IEEE
No reproduction or networking permitted without license from IHS
Not for Resale

Use of seismic experience data as an alternative method for equipment qualification shall be subject to the following restrictions:

a) A database of actual earthquake experience of sufficient size and diversity shall be available to demonstrate that the particular type of equipment has no tendency for seismic damage at least up to certain bounds of ground shaking intensity.

b) As part of the procedure, the user shall ensure that the substation equipment under review is in fact generally represented by the equipment included in the database.

c) As part of the procedure, the user shall ensure that the predicted ground motion for the substation site falls within the range of ground motion experienced by sites surveyed in compiling the database.

Adoption of a review procedure based on earthquake experience ensures that seismic design of low voltage control, instrumentation, and power supply equipment for substations does not require more rigorous and expensive procedures than for nuclear power plant safety systems.

Q.2 Report

No seismic outline drawing is required.

A report shall be provided that documents the requirements specified herein.

Copyright © 2006 IEEE. All rights reserved.

Copyright The Institute of Electrical and Electronics Engineers, Inc.
Provided by IHS under license with IEEE
No reproduction or networking permitted without license from IHS
Not for Resale

Annex R

(informative)

Composite and porcelain insulators

R.1 Composite insulators

Composite insulators, as used in this recommended practice, are composed of a fiber-reinforced core, elastomer sheath-sheds, and metal end fittings.

R.1.1 Definitions

Terms to know when using this annex are as follows:

- Elastomer: A synthetic rubber.
- Hydrophobicity: Lacking affinity for water. Water repellant. Causing water to bead.
- Mandrel: Tube or rod device onto which the fiber and resin is placed to form a hollow fiberglass tube.
- Pultrusion: Continuous fiber, which has been soaked in resin, is formed into either a solid rod or a hollow tube by pulling the fiber through a die. The finished shape is then oven cured. The fiber runs axially.
- Vulcanization: The cross-linking of long molecular chains of the polymer materials resulting in keeping elastic properties and removing the plasticity of the original rubber.

R.1.2 Core

The core usually consists of glass fibers in a resin matrix. The core provides the load-bearing nonconductive structure for the insulator.

Copyright © 2006 IEEE. All rights reserved.
--`,,```,,,,````-`-`,,`,,`,`,,`---

Copyright The Institute of Electrical and Electronics Engineers, Inc.
Provided by IHS under license with IEEE
No reproduction or networking permitted without license from IHS
Not for Resale

R.1.2.1 Core types

Cores can be categorized into two general types: solid core (rod) and hollow tube core. It is important to recognize that the method of manufacture, the mechanical behavior, and the application are often different. The two different core types are as follows:

a) *Solid core rod*. The glass fibers are pultruded axially. Solid core rods are used in all tension load applications. Because solid core rods are currently only made to a maximum of 76 mm to 89 mm (3 in to 3.5 in) in diameter, they are generally used in bending only when service loads are low to moderate. Applications include transmission line insulators, dead-end insulators, and line post and station post insulators. (For high bending load applications, hollow core composite insulators are generally used due to its greater rigidity and, depending on its design, its greater strength.)

b) *Hollow tube core*. The glass fibers can be axial (pultruded) or a criss-crossing weave (mandrel wrapped). Hollow tube criss-crossing weave-type fiberglass cores are the recommended type for seismic applications. In the weave core type, the glass fibers are wound onto a mandrel at a specific angle, criss-crossing in both directions. Hollow core composite insulators are generally used for apparatus such as bushings, current and voltage transformers, surge arresters, and other equipment parts where bending and pressure are major considerations.

R.1.2.2 Materials of core

The fiberglass structure is generally made of epoxy resin or polyester resin reinforced by glass fiber, or fiberglass-reinforced polymer (FRP). The fiberglass core generally contains more than 50% by weight of glass type fiber.

R.1.2.3 Core properties

The strength properties of fiber-reinforced hollow and solid core vary depending on many factors, such as the winding pitch of the fiber, the choice of reinforcing material and resin, the volume of the fibers, the number of fiber layers, and the method of winding. FRP strength and property values can vary greatly. Therefore, the values given in Table R.1 and Table R.2 should not be used for design. Rather, Table R.1 and Table R.2 offer a general comparison of FRPs with other materials such as porcelain, steel, and aluminum.

Table R.1 shows typical FRP properties.

Table R.1—Typical FRP properties

Properties	Data	
Ultimate stress (rod)	550–750 MPa	80–109 ksi
Damage limit (rod)	450–550 MPa	65–80 ksi
Poisson's ratio	0.25–0.28	

Copyright © 2006 IEEE. All rights reserved.

--`,,```,,,,````-`-`,,`,,`,`,,`---

Copyright The Institute of Electrical and Electronics Engineers, Inc.
Provided by IHS under license with IEEE
No reproduction or networking permitted without license from IHS
Not for Resale

Table R.2 compares typical values for steel, porcelain, and FRP.

Table R.2—Typical values for steel, porcelain, and FRP

Material	Young's modulus		Fracture toughness
Steel	210 GPa	30,000 ksi	100 MPa/$m^{1/2}$
FRP (E glass)	8–48 GPa	1160–7000 ksi	20–60 MPa/$m^{1/2}$
Porcelain	70 Gpa	10 200 ksi	0.1–10 MPa/$m^{1/2}$

R.1.2.4 Defining core strength

Identifying an allowable or design strength is difficult. The allowable or design strength is the value against which the calculated or tested stresses are compared. To use FRP allowables or design strength values, the reader should understand the mechanical behavior of composites.

The composite has four modes or levels of mechanical behavior, as follows:

a) *Elastic behavior*. The fiberglass core deforms elastically under initial load. The duration of the load does not affect strength as long as the stresses remain in the elastic domain. When the load is removed, the core returns to its original position and there is no reduction of strength.

b) *Damage limit behavior*. The transition zone between elastic behavior and plastic behavior is the damage limit zone. Below this limit, no fibers break. As one might expect, the actual damage limit is not well defined. Therefore, it is generally considered to be a range rather than a single point.

c) *Plastic behavior*. When the damage limit is exceeded, fibers begin to break and the load is transferred from the broken fiber to the epoxy resin. The resin creeps under the additional load, transferring the load to surrounding undamaged fibers. Assuming the new surrounding fibers are overstressed, more fibers will break passing more load to the resin. This process may repeat until the core fails. It should be noted that this does not happen suddenly, because this process involves creep. The time required to reach failure depends on the magnitude of the overload.

   For failure to occur, three events must occur:

   1) The load must be above the elastic limit.
   2) The load must be large enough that the fiberglass structure will not stabilize.
   3) The load must be held long enough for the process to go to completion.

   However, if the load is not an overload and it is removed early enough during this process, the total strength capacity of the core generally will not dramatically change. This characteristic is important for seismic applications, because the dynamic loads due to earthquakes are short and the creep discussed above does not have sufficient time to progress. Thus, the structural load carrying capability of the insulator is not dramatically changed.

d) *Instantaneous failure*. As can be seen, failure is possible in the plastic range, but it is time dependent. A significant amount of load above the damage limit must be applied to achieve instantaneous failure.

Copyright © 2006 IEEE. All rights reserved.

Copyright The Institute of Electrical and Electronics Engineers, Inc.
Provided by IHS under license with IEEE
No reproduction or networking permitted without license from IHS
Not for Resale

The insulator manufacturers provide two ratings, as follows:

— *SML*. The manufacturer specifies that the insulator will withstand this load without visual damage. This value is above the damage limit zone. This value is useful for short duration loads, such as short-circuit and seismic loads. The SML normally applies to bending loads.

— *MML*. If the core is required to hold a sustained load, that load must be kept below the SML. It is recommended that for sustained service loads, the MML be specified. The MML is 40% or less of the SML.

R.1.3 Sheath-sheds

Elastomers, such as EPM, EPDM, and SR, are the main materials used for sheath-sheds of composite insulators. Some typical properties of SR and EPDM are given in Table R.3.

Table R.3—EPDM and SR

Material	EPDM	SR
Specific gravity	1.25–1.55	1.25–1.60
Hardness (shore A)	75	25–75
Tensile strength	8.3–13.8 MPa (1200–2000 ksi)	5.5–6.9 MPa (800–1000 ksi)
Modulus of elasticity	4.8 Mpa (700 ksi)	1.4–2.8 MPa (200–400 ksi)
Tear strength	350–613 N/cm (200–350 ksi)	88–175 N/cm (50–100 ksi)

There are four general methods of applying sheath-sheds to the core, as follows:

a) The sheath-sheds are placed over the fiberglass core, either one by one or multiple continuous sections. A thin layer of silicone grease is placed between the fiberglass and the sheath-sheds to eliminate air gaps and to maintain dielectric integrity. The sheath-sheds are also compressed axially on the core to prevent the core from being exposed to the environment during large deflections.

b) A thin polymer sheath is extruded onto the core and partially cured. Sheds are placed along the sheath, and the entire assembly is completely cured. A chemical bond exists between the fiberglass and the sheath-shed material.

c) The entire sheath-shed housing is formed, vulcanized, and bonded to the core and the metal end fittings.

d) The sheath-sheds are extruded and helically wound on the core.

R.1.4 Metal end fittings

The end fittings are of extreme importance. The metal end fittings or their attachment to the core may be the weakest link in the structure. The end fittings perform the following functions:

a) Transfer the load from the fiberglass core to the attachment point.

b) Seal liquid or gas under pressure in hollow core insulators or bushings.

Copyright © 2006 IEEE. All rights reserved.

--`,,```,,,,````-`-`,,`,,`,`,,`---

Copyright The Institute of Electrical and Electronics Engineers, Inc.
Provided by IHS under license with IEEE
No reproduction or networking permitted without license from IHS
Not for Resale

c) Seal the ends of the fiberglass from the environment.

The metal end fittings are generally made from cast, forged, or machined aluminum; malleable iron; forged steel; or aluminum alloy.

There are various methods of attaching the metal end fittings to the core. The two most used methods are as follows:

— Swaging or crimping (radial pressing). The metal end fitting is crimped onto the fiberglass core. This method is most often used for suspension insulators.

— Shrink fitting. This method transfers load by creating an extremely tight fit between the fiberglass and the metal end fitting achieved by various proprietary methods. Most manufacturers use some type of adhesive between the fiberglass and metal end fitting, such as epoxy, to increase the load transfer. This method is used with hollow tube cores.

A third method no longer in common usage is potting. The metal end fitting is shaped like a cup, except the bottom of the cup is larger in diameter than the rim of the cup. The fiberglass core is inserted into the metal end fitting, and epoxy is injected into the void between the fiberglass and the metal fitting to form a wedge. The epoxy bonds to the fiberglass and is wedged in the metal fitting.

R.1.5 Seismic comparison of composite with porcelain

Composite insulators have the following advantages over porcelain insulators with regard to their ability to survive seismic events:

a) Composite insulators have the ability to absorb a greater degree of the vibrational energy due to their greater elasticity.

b) Composite insulators are lighter for a given voltage and mechanical strength rating.

c) Composite insulators are less prone to failure due to impact from falling objects.

d) If the conductor that connects equipment is suddenly drawn tight or experiences resonance during earthquake shaking, then the equipment's insulators may be subjected to shock loading. This phenomenon is a common cause of failure in earthquakes. Composite insulators, by virtue of their greater fracture toughness, are better able to withstand the shock loads imparted by seismic conductor interaction. (Refer to 5.9.1 and R.1.2.3.)

R.1.6 Safety considerations

The safety considerations are as follows:

a) If a composite under pressure is punctured (such as vandals shooting at insulators), it would just lose pressure. Porcelain can explode.

b) Composite bushings, which can become overpressurized due to an internal arc, will simply delaminate or develop a local puncture.

c) Hollow porcelain bushings, when subjected to a rapidly developing internal overpressure due to an internal fault in the equipment, can explode. The composite insulator just flashes over.

d) Porcelains fail suddenly and without warning in seismic shaking. There are no known failures of composites due to earthquakes. However, static pull tests show that composites split or crack, rather than break, like porcelains.

Copyright © 2006 IEEE. All rights reserved.

Copyright The Institute of Electrical and Electronics Engineers, Inc.
Provided by IHS under license with IEEE
No reproduction or networking permitted without license from IHS
Not for Resale

R.1.7 Topics of special concern

As with all technologies, composites have characteristics that should be understood by the user. Subclause R.1.7.1 through R.1.7.6 address some of those characteristics.

R.1.7.1 Environmental factors

Damage of the sheath-sheds due to environmental factors, such as ultraviolet light, dry-band discharges, temperature, and humidity, have long been of concern. All materials degrade due to environmental conditions. The rate of degradation differs. Unlike porcelain, which is made of inert materials and degrades very slowly, polymer sheath-sheds may degrade more quickly due to environmental conditions. However, the question that must be asked is whether the material will remain fully functional over its required life.

Not all elastomer sheath-sheds resist aging at the same rate. The user must evaluate the materials to determine which are appropriate for their application. Therefore, it is recommended that the user require the manufacturer pass aging tests. IEEE Std 1133™-1988 [B21], IEC 60587 [B13], IEC 61109 [B15], and ASTM D2303-97 [B1] are but a few of the standards defining requirements for aging. The user should adopt an aging testing program appropriate to their specific service conditions.

The sheath-sheds provide not only the necessary electrical clearances, but they also protect the fiberglass core from the environment. Careful attention should be given to the interface of the sheath-shed and the metal end fitting. Due to the differences in thermal expansion of the various materials, this area is the most likely avenue for the ingress of moisture.

Composite insulators were developed and used in outdoor transmission lines in the 1970s. Various technical improvements have been made, and large numbers have since been used in transmission lines. The usage of composite insulators in substations began in the 1980s.

R.1.7.2 Deflection

Composites deflect more than porcelain of comparable diameter and size. This characteristic should be considered when providing adequate bus slack, maintaining electrical clearances, and designing for short-circuit interactions.

R.1.7.3 Creep

Fiberglass creeps with time under sustained loads. If the load is maintained, the deflection will increase over time. This is generally not a problem in seismic events, because earthquake bending loads are transient. However, creep should be considered in the design if long-term loads are present, such as insulators mounted horizontally carrying significant vertical loads. If the loads are kept under the elastic limit, the insulator will return to its original position, after the load has been removed for a time.

Copyright © 2006 IEEE. All rights reserved.

Copyright The Institute of Electrical and Electronics Engineers, Inc.
Provided by IHS under license with IEEE
No reproduction or networking permitted without license from IHS
Not for Resale

R.1.7.4 Liners

When sulfur hexafluoride (SF6) is used, there is a potential for fluoric acids to be present. A protective coating of the inside wall of the hollow core should be required. This coating should be acid resistant and maintain high surface resistance. It is also recommended that a long-term pressure test, such as given in NEMA SG 4-2000 [B25], be required.

For oil-filled bushings or insulators, a protective inner liner or coating should be required to facilitate cleaning.

R.1.7.5 Fiberglass

The fiberglass core provides a lightweight, strong structure that is lighter than porcelain and therefore easier to handle. The ductile characteristics of fiberglass reduce the chance of damage during shipping, handling, and mounting. Of course, the insulators should be handled with care, especially the sheath-sheds, which are more susceptible to damage.

R.1.7.6 Metal end fittings

The metal end fitting's capacity to transfer the load to the core is very important to the structural capacity of the insulator or bushing, especially for solid core insulators, where the metal end fitting may be the weakest link.

It is possible during testing/earthquakes that some debonding may occur in hollow core insulators between the metal end fitting and the core. Debonding may not affect the structural performance of the end fitting as long as there is no permanent deformation after testing/earthquakes.

R.1.8 Related documents

For further information, refer to Australian Standard AS 4435.4-1997 [B5], IEC 61109 [B15], IEEE Std 1133-1988 [B21], and IEC 36/118/CD [B11].

R.2 Porcelain insulators

Over the past century, porcelain insulators have proven to be strong, reliable, and durable when proper design practices are applied. As a ceramic, porcelain is a brittle material, and therefore, attention must be paid to how mechanical loads are transferred to it.

The main components that make up porcelain insulators and bushings are porcelain body and metal end fittings. The mechanical strength of porcelain insulators and bushings depends on the following:

a) The microstructure of the porcelain body and metal end fittings.

b) Whether the porcelain is glazed or unglazed.

c) The cross-sectional geometry of the porcelain body and metal end fittings.

d) The load transfer mechanism employed between the porcelain body and the metal end fittings.

Copyright © 2006 IEEE. All rights reserved.
--`,,```,,,,````-`-`,,`,,`,`,,`---

Copyright The Institute of Electrical and Electronics Engineers, Inc.
Provided by IHS under license with IEEE
No reproduction or networking permitted without license from IHS
Not for Resale

R.2.1 Porcelain material

The composition and microstructure of each manufacturer's porcelain will differ, and therefore, the strength will be different. However, porcelain material can be divided into three classifications: normal, high, and extra high strength.

IEC 60672-3 [B14] defines three classifications that are commonly used in high voltage insulators. These classifications are shown in Table R.4.

Table R.4—Insulator strength

IEC group	Approximate flexural strength (min)	
	Unglazed	Glazed
C110 (Normal strength)	50 N/mm^2 (7250 psi)	60 N/mm^2 (8700 psi)
C120 (High strength)	90 N/mm^2 (13 100 psi)	110 N/mm^2 (16 000 psi)
C130 (Extra high strength)	140 N/mm^2 (20 000 psi)	180 N/mm^2 (26 000 psi)

R.2.2 Metal end fittings

The mechanical strength of insulators and bushings is greatly affected by the type of end fittings and how uniformly the load is transferred to the porcelain body. An improperly designed end fitting can actually decrease the strength of the insulator by concentrating stress in a narrow band or point. Porcelain is many times stronger in compression than in tension. Therefore, good end fitting design must make use of this fact.

There are three types of end fittings—center clamped, mechanical clamped, and cemented. It is important that the user understand the design considerations inherent with each type. They are discussed in Table R.5 and illustrated in Figure R.1, Figure R.2, and Figure R.3.

Copyright © 2006 IEEE. All rights reserved.

--`,,```,,,,````-`-`,,`,,`,`,,`---

Copyright The Institute of Electrical and Electronics Engineers, Inc.
Provided by IHS under license with IEEE
No reproduction or networking permitted without license from IHS

Not for Resale

Table R.5—Metal end fittings

Type	Equipment	Advantages	Disadvantages
Center clamped (Bending capacity determined by prestress of center tension rod)	—Transformer bushing —Dead-tank breaker bushings	—Economical design —Compact design	—Potential of oil leak (i.e., as bushing rocks off center, an opening between porcelain and the end fitting can occur) —Potential of cracking or breakage (i.e., concentration of stress at one point as the bushing rocks off-center)
Mechanically clamped	Measuring devices (Current transformer, Potential device, etc.) Bushing	—Economical design —Compact design	—Potential for breakage at a lower value than cemented type, due to a concentration of stresses at clamp.
Cemented	All	—Minimizes potential for oil leakage. —Minimizes potential for breakage due to concentration of stresses.	—The overall length of the insulator or bushing must include the height of the metal end fittings at both ends, which means the insulator or bushing must be slightly longer than the center clamped type.

R.2.2.1 Center clamped fittings

Center clamped bushings and insulator have a pre-tensioned rod (normally the conductor) that runs down the center of the bushing. The rod is connected to each end fitting. The pre-tension in the center rod provides the moment resistance of the bushing. No chemical or mechanical bonds provide structural resistance. By tensioning the rod, the end fittings are pressed onto the ends of the porcelain body. Lateral loads, such as earthquake loads, must overcome the precompression in the interface between the metal end fitting and the porcelain before uplift of the bushing from the end fitting can occur. The end fittings are generally plates with nonmetal gaskets to cushion the interface between the metal end fitting and the porcelain. When this type of bushing fails in an earthquake, it is generally due to one of the following reasons:

a) Oil leakage due to rocking or lifting of the bushing off the end fitting.

b) Displacement of the porcelain relative to the flange.

c) Protrusion of the gasket from between the porcelain and the flange.

d) Cracking at one edge of the porcelain caused by rocking or tilting of the porcelain.

Copyright © 2006 IEEE. All rights reserved.

Copyright The Institute of Electrical and Electronics Engineers, Inc.
Provided by IHS under license with IEEE
No reproduction or networking permitted without license from IHS
Not for Resale

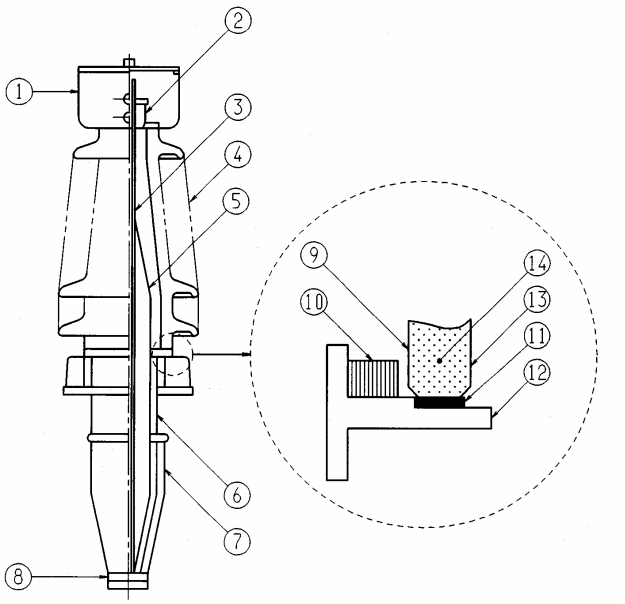

Figure R.1—Example of center clamped type

R.2.2.2 Mechanically clamped fittings

The metal end fitting of the clamped type is attached to the porcelain by means of a mechanical clamping device. The main disadvantage of this method is that the full strength of the porcelain may not be achieved due to concentration of stresses in the porcelain at the clamp. The following special considerations must be given when designing the area labeled as "A" in Figure R.2:

a) The clamping device should be designed to evenly and properly bear on the porcelain surface. If this cannot be done, the porcelain must be ground to achieve a proper bearing surface. No sharp corners should be allowed. Sharp corners are stress risers that invite cracking. All corners should have as large a radius as possible.

b) The bearing area of the clamp on the porcelain must be adequate.

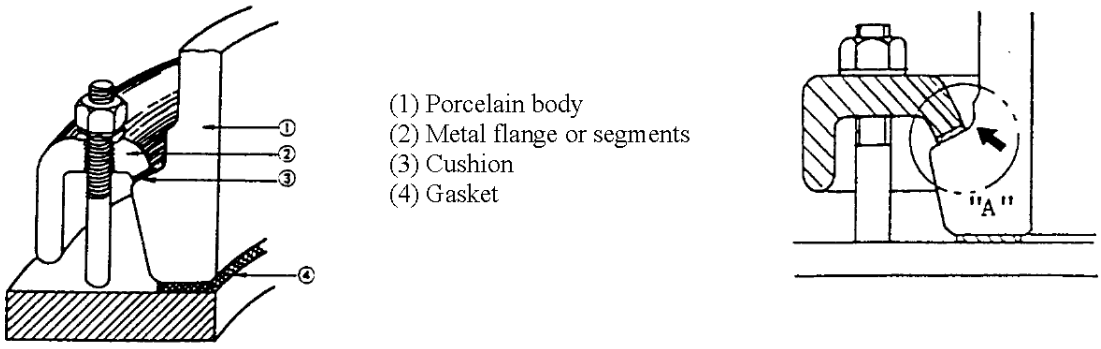

Figure R.2—Mechanically clamped type

Copyright © 2006 IEEE. All rights reserved.

Copyright The Institute of Electrical and Electronics Engineers, Inc.
Provided by IHS under license with IEEE
No reproduction or networking permitted without license from IHS
Not for Resale

R.2.2.3 Cemented fittings

The third type of metal end fitting is the cemented metal socket or fitting. Here, the inside of the metal end fitting is contoured to translate tensile loads into compressive loads on the porcelain body.

A grout material is employed between the end fitting and the porcelain body. This material must be rigid enough to transfer the compressive loads and yet be pliable enough to prevent load concentrations on the porcelain. The most common material used for this purpose is Portland cement. Other materials used include alumina cement, sulfur cement, lead, and epoxy.

The strength of porcelain with a cemented fitting is markedly influenced by H/D (ratio of depth of engagement to the diameter of the porcelain). Should the H/D be too shallow, the load cannot be properly transferred from the metal end fitting, causing a concentration of stresses in the porcelain, resulting in failure at a lower value than the inherent strength of porcelain. To attain the inherent strength of the porcelain, it is recommended that the H/D be at least 0.45 for normal strength porcelain. This ratio must be increased for high strength porcelain proportionally to any increase in porcelain strength.

Four materials are generally used for cemented fittings: gray iron, ductile iron, aluminum alloy, and bronze. Aluminum and bronze are non-magnetic materials suitable for bushings and insulators under heavy current. A comparison of the materials used in cemented fitting is given in Table R.6.

Table R.6—Cemented fittings

Material	Approximate Modulus of elasticity (Mpa)	Approximate Tensile strength obtained by test bars (Mpa)	Approximate Linear coefficient of thermal expansion at 20 °C/°C	Remarks
Gray iron casting	98×10^3	More than 196	10×10^{-6}	Magnetic material
Ductile iron casting	157×10^3	More than 441	10×10^{-6}	
Aluminum alloy casting	69×10^3	More than 226	22×10^{-6}	Non-magnetic material
Bronze casting	78×10^3	More than 177	18×10^{-6}	

The inside of cemented metal end fittings generally are one of two shapes: saw-tooth shape and rectangular-groove shape. The appropriate shape is dependent on the application of the insulators or the bushings. The saw-tooth design is applicable when the metal end fitting material has a low thermal expansion, such as gray iron and ductile iron. The saw-tooth design provides a uniform stress distribution.

The rectangular-groove shape is applicable where a material with a comparatively large thermal expansion is needed, such as aluminum alloy and bronze. This type provides for a small amount of sliding within the fitting for thermal expansion at elevated temperature.

Copyright © 2006 IEEE. All rights reserved.

Copyright The Institute of Electrical and Electronics Engineers, Inc.
Provided by IHS under license with IEEE
No reproduction or networking permitted without license from IHS
Not for Resale

(1) Porcelain body
(2) Metal flange
(3) Cement material - Portland cement

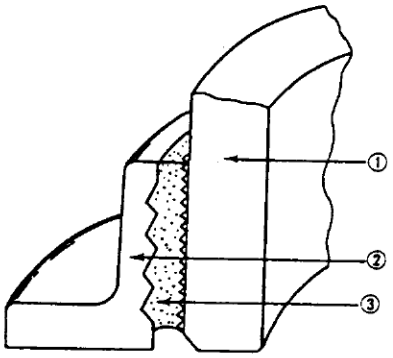

Figure R.3—Cemented type

R.2.3 Tests

The following tests are suggested, as routine tests, in addition to the requirements specified in the relevant sections of the IEC and ANSI standards, as routine tests, as a means to more precisely assure the mechanical performance of the porcelain insulators and bushings:

a) *Station post insulators*. Before assembly of end fittings:
   1) 8-direction uniform bending moment test at 70% rating
   2) Ultrasonic flaw detection test
b) *Bushings*. Before assembly of fittings:
   1) Inner pressure withstand test

NOTE—Inner pressure withstand tests are applied for pressurized insulators only.

c) *Bushings*. After assembly of fittings:
   1) 4-direction bending moment test
   2) Inner pressure withstand test

R.2.4 Performance of porcelain compared with composites

When properly designed, equipment employing porcelain insulators can be made to withstand seismic forces. The industry has over 100 years of experience using porcelain, and that experience has generally been very good.

Porcelain has the following advantages over composites:

a) Slow aging and degradation of insulating material.
b) Unlike composites, the inner-core strength member does not need to be protected from the environment or the formation of non-neutral pH solutions. The porcelain, which is inert and not subject to attack from any but a few of the most caustic solutions, provides the bulk of the mechanical strength of the insulator. (Of course, the electrical components may need to be protected from the environment.)

Copyright © 2006 IEEE. All rights reserved.

Copyright The Institute of Electrical and Electronics Engineers, Inc.
Provided by IHS under license with IEEE
No reproduction or networking permitted without license from IHS
Not for Resale

c) Highly rigid. Therefore, interconnections and tolerance of mating parts are not as critical.

d) Less chance of damage during high-pressure washing.

e) Wide variation of configuration.

R.2.5 Measures for improving porcelains performance in earthquakes

a) *De-tune porcelain support*. As noted in 6.5, the equipment support has a significant effect on the motion of the equipment. If the support can be designed such that its natural frequencies are away from the frequencies of higher acceleration, then the equipment will not need to withstand the higher dynamic loads.

b) *Pre-stress the insulators and bushings in compression*. As the compressive strength of porcelain is very high, its apparent bending strength can be increased by imposing a compressive load (pre-stress).

c) *Uprating porcelain strength*. Increase the strength of the porcelain body by improving the composition and microstructure. Increases in strength can be obtained without an appreciable increase in mass.

d) *Limit the number of mechanical joints*. As the joints in the insulator or bushing are the weakest link, limiting their usage will improve performance.

Copyright © 2006 IEEE. All rights reserved.

Copyright The Institute of Electrical and Electronics Engineers, Inc.
Provided by IHS under license with IEEE
No reproduction or networking permitted without license from IHS
Not for Resale

Annex S

(normative)

Analysis report template[24]

Report No._____

Seismic Analysis-Qualification Report

Qualified to Level_____; ____*g* ZPA of the RRS
High or Moderate

_____
Equipment Designation

_____
kV or equipment rating

Report Prepared by:_____

Date Signed or Revised:_____

Address of Preparer:

_____

_____

_____

Equipment Manufactured by:

_____

This is to certify that the above-named equipment and support, if support is required, meets or exceeds all of the requirements according to IEEE Std 693 – (Edition Year).

Signed:_____

[24] Copyright release for analysis report template; users of this standard may freely reproduce the analysis report template in this annex so that it can be used for its intended purpose and may further publish the completed template.

Copyright © 2006 IEEE. All rights reserved.

Copyright The Institute of Electrical and Electronics Engineers, Inc.
Provided by IHS under license with IEEE
No reproduction or networking permitted without license from IHS
Not for Resale

Table of Contents

Page

1.0 General..... 1

2.0 Equipment data.....

3.0 Method of analysis.....
.
.
.
Additional sections, as required.

Appendices

Appendix A: Items as required in A.6.1.....

Appendix B: Seismic outline drawing.....
for insulator allowable/ultimates.....

Appendix C: Model w/labeled nodes, member's types, and dimensions, if by dynamic analysis.....
.
.
.
Additional appendices, as required.

1.0 General

a) Supplemental work and options
b) Load cases considered, including operating, dead, live, seismic, etc.
c) Equipment configurations considered, such as switch open or switch closed, with or without associated cabinet, etc.
d) General or global assumptions used (detailed assumptions should be embedded in the report)
e) Testing, if any (such as testing for damping, or testing of a component)
f) Modifications required, if any, to pass the analysis
g) Replica of identification plate
h) Other topics, as required

2.0 Equipment data

a) Overall dimensions and weights
b) Resonance frequencies, if by dynamic analysis
c) Damping ratio, if by dynamic analysis or by Annex B
d) Center of gravity of equipment and its components
e) Maximum accelerations and displacements at critical points, if by dynamic analysis
f) Equipment and structure reactions at support points, including magnitude and direction, at each reaction point
g) Anchorage details, including size, location, and material strength for structural members, bolts, welds, and plates
h) Maximum input (ground) accelerations
i) Materials types and strengths
j) Other topics, as required

3.0 Method of analysis

a) Method of analysis
b) Name of computer program used, if any
c) Assumptions made in modeling the equipment and supporting structure
d) Other topics, as required

Copyright © 2006 IEEE. All rights reserved.

Copyright The Institute of Electrical and Electronics Engineers, Inc.
Provided by IHS under license with IEEE
No reproduction or networking permitted without license from IHS
Not for Resale

Summary of Maximum Stresses, Loads, etc.*

Component	Pg #	Location of component in equipment, location of stress in component, or both.	Moment, shear, torsion, tension, combination, etc.	Calculated Value (f)	Allowable value (F)	F --- f

* List the 11 smallest [F/f] factors.

Copyright © 2006 IEEE. All rights reserved.

Copyright The Institute of Electrical and Electronics Engineers, Inc.
Provided by IHS under license with IEEE
No reproduction or networking permitted without license from IHS
Not for Resale

Example: Dynamic Analysis—Summary of Maximum Stresses, Loads, etc.[a]

Component	Pg #	Location of component in equipment, location of stress in component, or both.	Moment, shear, torsion, tension, combination, etc.	Calculated Value (f)	Allowable Value (F)	F --- f
Porcelain Insulator	27	Base of Porcelain Insulator #2	Moment	43 in-k	43 in-k	1
Steel Support Leg	30	Base of corner columns	Moment Compression	28 ksi	28 ksi	1
Connection Weld	19	Connecting brace frame bracket to	Shear and Bending	20 ksi	21 ksi	1.05
Porcelain Insulator	27	Base of Porcelain Insulator #3	Moment	37 in-k	40 in-k[b]	1.08
Connection Bolts	21	Connecting insulators to base	Tension and Shear	17.4 ksi	19 ksi	1.09
Porcelain Insulator	25	Base of Porcelain Insulator #4	Torsion	36 in-k	40 in-k[b]	1.11
Porcelain Insulator	24	Base of Porcelain Insulator #1	Moment	44 in-k	50 in-k	1.14
Aluminum Bracket Bolt	31	Interface between insulator and tank.	Shear	10.8 ksi	27 ksi	2.5
Steel Frame	46	All symmetrical corners.	Bending	12 ksi	31.9 ksi	2.66
Anchor Bolts	88	All anchor bolts	Shear and Tension	5 ksi	20 ksi	4
Steel Beam	7	Cross member between legs	Bending	6.1 ksi	29 ksi	4.75

[a] Include the 11 smallest [F/f]'s .
[b] Note that the porcelain's ultimate strength is 80 in-k. The allowable is 40 in-k. or 0.5 x 80. (Manufacturer's insulator data are in Appendix E.)

Copyright © 2006 IEEE. All rights reserved.

Copyright The Institute of Electrical and Electronics Engineers, Inc.
Provided by IHS under license with IEEE
No reproduction or networking permitted without license from IHS
Not for Resale

Example (metric): Dynamic Analysis—Summary of Maximum Stresses, Loads, etc.[a]

Component	Pg #	Location of component in equipment, location of stress in component, or both.	Moment, shear, torsion, tension, combination, etc.	Calculated Value (f)	Allowable Value (F)	F --- f
Porcelain Insulator	27	Base of Porcelain Insulator #2	Moment	4.86 kN·m	4.86 kN·m	1
Steel Support Leg	30	Base of corner columns	Moment Compression	193 MPa	193 MPa	1
Connection Weld	19	Connecting brace frame bracket to	Shear and Bending	138 MPa	145 MPa	1.05
Porcelain Insulator	27	Base of Porcelain Insulator #3	Moment	4.18 kN·m	4.52 kN·m[b]	1.08
Connection Bolts	21	Connecting insulators to base	Tension and Shear	120.0 MPa	131 MPa	1.09
Porcelain Insulator	25	Base of Porcelain Insulator #4	Torsion	4.07 kN·m	4.52 kN·m[b]	1.11
Porcelain Insulator	24	Base of Porcelain Insulator #1	Moment	4.97 kN·m	5.65 kN·m	1.14
Aluminum Bracket Bolt	31	Interface between insulator and tank.	Shear	74.5 MPa	186 MPa	2.5
Steel Frame	46	All symmetrical corners.	Bending	82.7 MPa	220 MPa	2.66
Anchor Bolts	88	All anchor bolts	Shear and Tension	34 MPa	138 MPa	4
Steel Beam	7	Cross member between legs	Bending	42 MPa	120 MPa	4.75

[a] Include the 11 smallest [F/f]'s .
[b] Note that the porcelain's ultimate strength is 9.04 kN·m. The allowable is 4.52 kN·m. or 0.5 x 9.04 kN·m. (Manufacturer's insulator data are in Appendix E.)

Copyright © 2006 IEEE. All rights reserved.

Copyright The Institute of Electrical and Electronics Engineers, Inc.
Provided by IHS under license with IEEE
No reproduction or networking permitted without license from IHS
Not for Resale

Copyright The Institute of Electrical and Electronics Engineers, Inc.
Provided by IHS under license with IEEE
No reproduction or networking permitted without license from IHS
Not for Resale

EXAMPLE OF "SEISMIC ANALYSIS-QUALIFICATION REPORT"

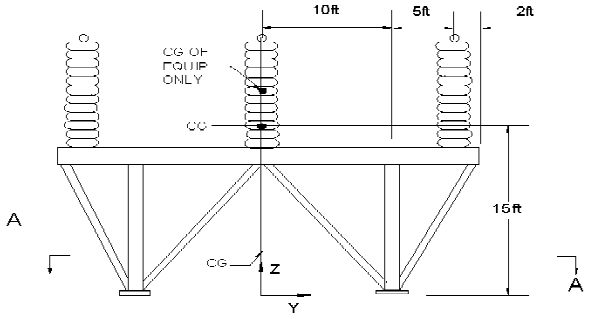

SIDE VIEW

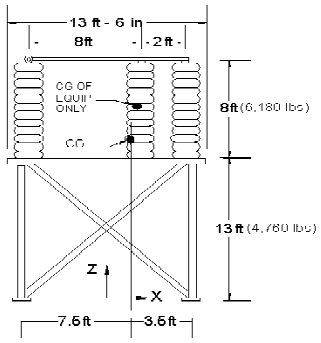

END VIEW

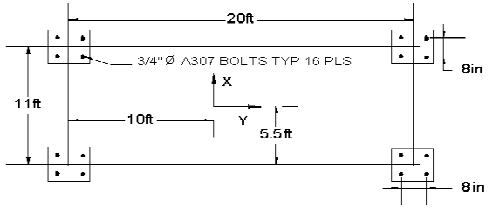

SECTION A - A
FOUNDATION ANCHOR BOLT PLAN

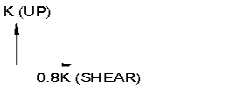

MAXIMUM LOAD
PER ANCHOR BOLT
(SEISMIC +DL)
(OPERATING LOAD IS ZERO)

DATA :

TOTAL WEIGHT	10, 940 LBS	
Center of gravity of Equipment:		
X - 2.8 FT		
Y - 0.0		
Z - 17.2 FT		
RESONANT FREQUENCIES W/DAMPING :	4.8 Hz @ 2% DAMPING (X-AXIS)	
	18.4 Hz @ 2% DAMPING (Y-AXIS)	
MAXIMUM DEFLECTION:	1.2 INCHES @ CONDUCTOR ATTACHMENT POINTS	
QUALIFIED BY :	DYNAMIC ANALYSIS	
MAX REACTION PER LEG @ BASE :	CASE 1	CASE 2
	3.12 K SHEAR	2.96 K SHEAR
	4.1 K-FT MOMENT	3.0 K-FT MOMENT
	12.1 K UPLIFT	23.4 K DOWN
MANUFACTURER :	ADVANCED SWITCH	
DATE PREPARED :	9/2004	

SEISMIC OUTLINE DRAWING

TYPE OF EQUIPMENT : DISCONNECT SWTICH
EQUIPMENT VOLTAGE: 138 kV
APPROVED BY : *Jane Expert*
REPORT OR CONTRACT NUMBER . 4673
QUALIFIED BY : IEEE 693 - 2005, LEVEL HIGH

DRAWING NUMBER

Copyright © 2006 IEEE. All rights reserved.

Copyright The Institute of Electrical and Electronics Engineers, Inc.
Provided by IHS under license with IEEE
No reproduction or networking permitted without license from IHS
Not for Resale

EXAMPLE OF "SEISMIC ANALYSIS-QUALIFICATION REPORT" IN METRIC UNITS

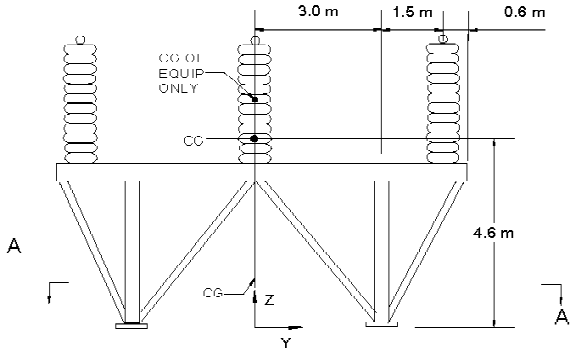

SIDE VIEW

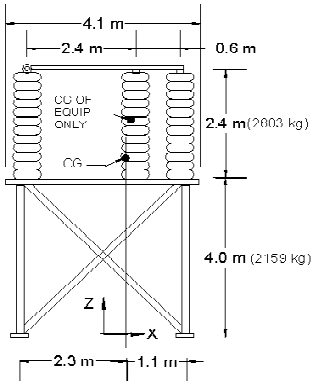

END VIEW

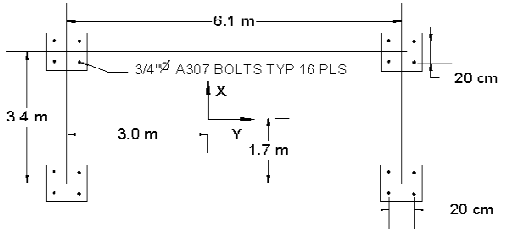

SECTION A - A
FOUNDATION ANCHOR BOLT PLAN

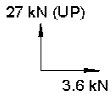

MAXIMUM LOAD
PER ANCHOR BOLT
(SEISMIC +DL)
(OPERATING LOAD IS ZERO)

DATA :

TOTAL WEIGHT	1962 kg
Center of gravity of Equipment:	
X - 0.85 m	
Y - 0.0	
Z - 5.24 m	
RESONANT FREQUENCIES W/DAMPING :	4.8 Hz @ 2% DAMPING (X-AXIS) 18.4 Hz @ 2% DAMPING (Y AXIS)
MAXIMUM DEFLECTION:	3.0 cm @ CONDUCTOR ATTACHMENT POINTS
QUALIFIED BY :	DYNAMIC ANALYSIS

MAX REACTION PER LEG @ BASE :	CASE 1	CASE 2
	13.9 kN SHEAR	13.2 kN SHEAR
	5.6 kN m MOMENT	4.1 kN m MOMENT
	53.0 kN UPLIFT	101.1 kN DOWN

MANUFACTURER :	ADVANCED SWITCH
DATE PREPARED :	1/2006

SEISMIC OUTLINE DRAWING

TYPE OF EQUIPMENT : DISCONNECT SWTICH
EQUIPMENT VOLTAGE : 138 kV
APPROVED BY : *Jane Expert*
REPORT OR CONTRACT NUMBER : 4673
QUALIFIED BY : IEEE 693 - 2005, LEVEL HIGH

DRAWING NUMBER

Copyright © 2006 IEEE. All rights reserved.

Annex T

(normative)

Test report template[1]

Report No._____

Seismic Test-Qualification Report

Qualified to Level_____; ___g ZPA of the RRS
High or Moderate

_____
Equipment Designation

_____
kV or equipment rating

Report Prepared by:_____

Date Signed or Revised:_____

Address of Preparer:

_____

_____

_____

Equipment Manufactured by:

_____

This is to certify that the above-named equipment and support, if support is required, meets or exceeds all of the requirements according to IEEE Std 693 – (Edition Year).

Signed:_____

[1] Copyright release for analysis report template; users of this standard may freely reproduce the analysis report template in this annex so that it can be used for its intended purpose and may further publish the completed template.

Copyright © 2006 IEEE. All rights reserved.

Copyright The Institute of Electrical and Electronics Engineers, Inc.
Provided by IHS under license with IEEE
No reproduction or networking permitted without license from IHS
Not for Resale

Table of Contents

1 Key information and results
2 Main test results and test configuration
3 Detailed test results and supporting data (shake-table test)
4 Functional requirements (Appendix I)
5 Video
Additional sections as required.

Appendices

A Drawings describing equipment that was tested
B Detailed description of shake table
C Data and calculations supporting summary of results and determination of controlling variables
D Instrumentation calibration data
E Pictures showing test setup and instrumentation
F Calculations supporting determination of frequencies and damping and reference to source data in test laboratory report
G Calculations supporting data in table listing maximum accelerations, stresses, and displacements (if required) and citations of source data.
H Calculations supporting determination of anchorage loads
I Data sheets showing certification of functional tests
Additional appendices as required.

Report Content

(Note that the Appendices shown in parentheses contain supporting calculations.)

It is recognized that this template may not be compatible with some types of equipment or qualification methods and should be appropriately modified.

1 Key information and results

a) Description of the equipment to be tested (Appendix A) and critical load limits (Appendix C).
b) Describe the equipment configurations to be considered, such as switch open and/or switch closed, with or without associated cabinet, grounding links, etc.
c) Level to which the equipment has been qualified.
d) Modifications required, if any, to pass the test.
e) Anomalies or damage observed during the tests (identify and indicate their significance to the qualification).
f) List supplement work and options (A.5.3).
g) List of witness(es), if any, and the company(ies) the witness(es) represented.
h) Test facility, name, location, telephone and fax numbers, e-mail address, test engineers name and title, and test dates.
i) Except for the pull test, description of shake-table testing equipment (such as 2-D or 3-D) (Appendix B).
j) Summary of results of supplemental work and options as listed in A.5.3 (Appendix C).
k) Replica of identification plate.
l) Seismic outline drawing.
m) Except for the pull test, plots of the comparison of the TRS with the RRS.
n) Tabulate summary table of maximum controlling stress, loads, and displacements (Appendix G).

Copyright © 2006 IEEE. All rights reserved.

Copyright The Institute of Electrical and Electronics Engineers, Inc.
Provided by IHS under license with IEEE
No reproduction or networking permitted without license from IHS
Not for Resale

2 Main test results and test configuration

a) Create an instrumentation diagram showing the location of all instruments (Pictures in Appendix E, Calibration data in Appendix D).
b) Test method.
c) Functional tests needed.
d) Except the pull test, test sequence.
e) Installation (support and anchorage).
f) Other topics as requested or required.

3 Detailed test results and supporting data (shake-table test)

a) Except the pull test, frequencies, and damping (Appendix F).
b) Except the pull test, input time histories (table accelerations).
c) Tabulated list of maximum accelerations, stresses, and displacements at measuring points of all controlling tests (Appendix G).
d) Summarize anchorage loads (Appendix H).
e) Other topics, as requested or required.

4 Functional requirements (Appendix I)

5 Video (not required for the pull test)

Copyright © 2006 IEEE. All rights reserved.

Copyright The Institute of Electrical and Electronics Engineers, Inc.
Provided by IHS under license with IEEE
No reproduction or networking permitted without license from IHS
Not for Resale

Detailed Guide to Report Contents

1 Key information and results

(Note that the template contains additional information to that identified in A.5.1 to reflect the "as-tested configuration." Items such as serial numbers, details of the support structure and anchorage, the shake-table specifications, and instrument calibration have been added.)

a) Description of the equipment to be tested, which should include the general description, its operating voltage, its rated capacity, the drawing numbers for major seismically vulnerable components (such as the box and lid for instrumentation transformers, drawing numbers for porcelain or composite insulator components), the rated strength of critical components (such as porcelain insulators or the SML of composite insulator), and serial number(s) of items that were tested. In Appendix A, show the manufacturer's drawings of critical items with load limits, such as SML for composite insulators or ultimate strength of porcelain members. If static tests were done to establish capacity of complex components (see A.3), these tests should be described in Appendix C and the results summarized in the body of the report. If drawings contain proprietary information, such as an instrumentation transformer box and lid, only the drawing number needs to be provided.
b) Describe the equipment configurations to be considered, such as switch open and/or switch closed, with or without associated cabinet, and grounding links. If the unit was tested with a corona ring, this should be noted along with its weight as well as weight, if any, that was added to the account for conductor connection pad and cable connection hardware.
c) Level to which the equipment has been qualified. (Be specific, such as specify the level associated with the Required Response Spectra –0.25*g* or 0.5*g* or the performance level –1.0*g*.)
d) Modifications required, if any, to pass the test.
e) Anomalies or damage observed during the tests. (Identify and indicate their significance to the qualification.)
f) List supplemental work and options (A.5.3).
g) List of witness(es) and the company(ies) the witness(es) represented.
h) Test facility, name, location, telephone and fax numbers, e-mail address, test engineers name and title, and test dates.
i) Description of shake-table testing equipment (such as 2-D or 3-D). Detailed description should be placed in Appendix B.
j) Summary of results of supplemental work and options as listed in Section A.5.3 with supporting worksheets in Appendix C. (This might also include data associated with a pull test of composite insulator or the test of complex component as described in A.3.)
k) Replica of identification plate.
l) Seismic outline drawing shall be a full page drawing that contains all of the information called for in A.5.3. See example at end of this annex.
m) Plots of the comparison of the TRS with the RRS of the qualifying input time histories and comments about the comparison if appropriate.

Tabulate summary table of maximum controlling stress, loads, and displacements (F), allowable capacities (f), and their margin (F/f), starting in order with the equipment component's smallest margin, for the support structure and equipment. (See the "Example of the Shake-Table—Summary of Maximum Controlling Stresses, Loads, etc." in this annex.) The page numbers for the sources of these values should be extracted from the Laboratory Test Report (LTR) and cited in the table. Affiliated with this table should be a worksheet showing the calculation, where calculations are needed, and the allowable values should also be referenced to material contained in the document. This material should be placed in Appendix H. Also, document justification of the ultimate porcelain strength or maximum observed deflections of composites with pre- and post-vibration pull test data. Measured critical variables associated with tests of parts with complex components should be compared with proof loads and shown in the table (A.1.2.5). The results of tests associated with parts with complex shapes should be summarized in the body of the report and data and supporting calculations contained in Appendix C.

Copyright © 2006 IEEE. All rights reserved.

Copyright The Institute of Electrical and Electronics Engineers, Inc.
Provided by IHS under license with IEEE
No reproduction or networking permitted without license from IHS
Not for Resale

(Note that the comparisons of the TRS and the RRS are given in Section 1m) of this report.)

2 Main test results and test configuration

a) Create an instrumentation diagram showing the location of all instruments (strain gauges, accelerometers, load bolts, etc.) on the equipment and support structure as they were installed during the test. Assign a number with each measuring device consistent with the nomenclature used in the test-laboratory report. Identify directions used in the report, such as front-back and side-side or x and y, and show them on the instrumentation diagram. Generate a table, to be placed in Appendix D, giving the instrument number, instrument type (strain gauge or accelerometer, etc.), and date of calibration of all instrumentation. In Appendix E, show pictures extracted from the LTR or taken at the time of the test setup and instrumentation. Also, list other instrumentation that was used, such as that used for a pull test of composite insulators.
b) Test method. (For example, time history and/or sine beat and 3-D or 2-D. If 2-D testing is used, this should be justified.)
c) Functional tests needed (such as resistance of disconnect switch, or normal electrical test for capacitive-coupled voltage transformers).
d) Generate a table listing the test sequence and the excitation level associated with each test.
e) Installation (support and anchorage) details including support structure plans, size, location, and material strength of the structural members, bolts, welds, and plates. Note that the bolt pattern for the base plate and equipment support plate should also be shown on the seismic outline diagram
f) Other topics as requested or required.

3 Detailed test results and supporting data (shake-table test)

a) Frequencies and damping from frequency search for pre- and post-tests (if conducted). Plots of search data from LTR should be referenced by page number from the LTR. Also, show results from man-shake and snapback test results and reference source data in the LTR, if applicable. Include calculations for damping estimates in Appendix F. These results should also be shown on the Seismic Outline Drawing.
(Note that the comparisons of the TRS and the RRS are given in Section 1m) of this report.)
b) Input time histories (table accelerations) and the various other response variable time histories that are used to support calculations not referenced elsewhere should be cited and calculations placed in Appendix G.
c) Tabulated list of maximum accelerations, stresses, and displacements at measuring points of all controlling tests, including the results from the natural frequency search (See "Example of Data Measurement Points" in this annex.) The response data supporting calculations, where needed, should be placed in Appendix G. All calculations should explicitly reference the data source from the LTR by page number.
d) Summarize anchorage loads. The calculations used to obtain the reactions at the equipment and support anchorage should be in Appendix H. Source data supporting these calculations should be referenced by page number from the LTR. These results should be shown on the Seismic Outline Drawing.
e) Other topics, as requested or required.

4 Functional requirements

List of functional tests performed and all other required non-shake-table tests or monitoring, such as timing, resistance, or any production test. Certifications of functional or other tests needed to demonstrate functionality are to go into Appendix I.

5 Video

Copyright © 2006 IEEE. All rights reserved.

Copyright The Institute of Electrical and Electronics Engineers, Inc.
Provided by IHS under license with IEEE
No reproduction or networking permitted without license from IHS
Not for Resale

Shake-Table Tests—Summary of Maximum Stresses, Loads, etc. Appendix C						
Component	Pg #	Location of component in equipment. Discussion of value	Type of Test	Measured Value (f)	Allowable Values (F)	F --- f

Example: Shake-Table Test--Summary of Maximum Stresses, Loads, etc. Appendix C						
Component	Pg #	Location of component in equipment, Discussion of value.	Type of Test	Measured Values (f)	Allowable Values (F)	F --- f
Porcelain Insulator	24	Base of Porcelain Insulator #1	Time History	32 in-k	32 in-k[a]	1.00
Porcelain Insulator	25	Base of Porcelain Insulator #1	Time History	31.4 in-k	32 in-k[a]	1.02
Porcelain Insulator	27	Base of Porcelain Insulator #2	Sine Beat	53.3 in-k	57.6 in-k[b]	1.08
Porcelain Insulator	27	Base of Porcelain Insulator #3	Time History	28.8 in-k	32 in-k[b]	1.11
Steel Support Leg	30	Base of corner columns	Time History	25.4 ksi	29 ksi	1.14
Steel Plate	21	Interface between base container and shaft.	Sine Beat	24 ksi	36 ksi	1.50
Composite Insulator	36	Insulator #6. Measured deflection before and after time history shake-table test.	Time History	2.1 inch Before	2.3 inch[c] After	1.58
Composite Insulator	37	Insulator #6. Measured deflection before and after sine beat test.	Sine Beat	3.3 inch Before	3.8 inch[d] After	1.78

[a]The porcelain's ultimate strength is 64 in-k. Time history allowable is 32 in-k = 0.5 x 64.
[b]Porcelain's sine beat allowable is 0.9 x 64 or 57.6 in-k.
[c]Composite's deflection is 2.1 15% is 0.315. Difference between before and after is 0.2. F/f is 0.315/.2 = 1.58.
[d]Composite's deflection is 3.3 inches. 15% for sine-beat is 0.495 x 1.8 = 0.891. Difference between before and after is 0.5. F/f is .891/0.5 = 1.78.

Copyright © 2006 IEEE. All rights reserved.

Copyright The Institute of Electrical and Electronics Engineers, Inc.
Provided by IHS under license with IEEE
No reproduction or networking permitted without license from IHS
Not for Resale

Example (metric): Shake-Table Test--Summary of Maximum Stresses, Loads, etc.
Appendix C

Component	Pg #	Location of component in equipment, Discussion of value.	Type of Test	Measured Values (f)	Allowable Values (F)	F --- f
Porcelain Insulator	24	Base of Porcelain Insulator #1	Time History	3.62 kN·m	3.62 kN·m[a]	1.00
Porcelain Insulator	25	Base of Porcelain Insulator #1	Time History	3.55 kN·m	3.62 kN·m[a]	1.02
Porcelain Insulator	27	Base of Porcelain Insulator #2	Sine Beat	6.02 kN·m	6.52 kN·m[b]	1.08
Porcelain Insulator	27	Base of Porcelain Insulator #3	Time History	3.25 kN·m	3.62 kN·m[b]	1.11
Steel Support Leg	30	Base of corner columns	Time History	175.1 MPa	200 MPa	1.14
Steel Plate	21	Interface between base container and shaft.	Sine Beat	165 MPa	248 MPa	1.50
Composite Insulator	36	Insulator #6. Measured deflection before and after time history shake-table test.	Time History	5.3 cm Before	5.8 cm[c] After	1.59
Composite Insulator	37	Insulator #6. Measured deflection before and after sine beat test.	Sine Beat	8.4 cm Before	9.7 cm[d] After	1.75

[a]The porcelain's ultimate strength is 7.24 kN·m. Time history allowable is 3.62 kN·m = 0.5 x 7.24 kN·m.
[b]Porcelain's Sine Beat allowable is 0.9 x 7.24 kN·m or 6.52 kN·m.
[c]Composite's deflection is 5.3 cm. 15% is 0.795 cm. Difference between before and after is 0.5 cm. F/f is 0.795 cm/0.5 cm = 1.58.
[d]Composite's deflection is 8.4 cm. 15% for sine-beat is 1.26 cm x 1.8 = 2.268 cm. Difference between before and after is 1.3 cm. F/f is 2.268 cm/1.3 cm = 1.75.

Tabulated list of Maximum Accelerations, Stresses, and Displacements for a CVT-Appendix G

Accelerometer	Direction	Location	Resonant	Page	Time History	Page	Sine-Beat 3.45 Hz	Page	Sine-Beat 6.89 Hz	Page
A1	FB	Table	-.71	52	-.71	90	.54	26	.53	44
A2	V	Table	.40	74	.40	85	-.42	72	-.40	77
A3	FB	Top of Tank	-1.1	28	-1.1	115	1.3	109	1.2	121
A4	SS	Top of Tank	-.13	96	-.13	32	-.15	45	.37	96
A5	FB	Bushing (c.g.)	-1.4	81	-1.4	54	1.3	56	1.3	31
A6	SS	Bushing (c.g.)	.23	106	.23	67	-.3	78	-0.8	66
A7	FB	Top of Bushing	-2.0	37	-2.0	98	-2.6	91	2.4	90
A8	SS	Top of Bushing	.61	149	.61	2	-.72	164	.41	39
A9	V	Top of Bushing	.77	174	.77	34	.48	182	.72	199
Strain Gauges (micro-strain) Stresses – psi and Bolt loads – lbs										
S1	FB	Pedestal Base	12,354	15	12,354	99	15,109	33	1,769	203
S2	SS	Pedestal Base	3,509	29	3,509	12	4,524	49	3,219	56
S3	FB	Bottom of Bushing	3,060	77	3,060	56	3,640	62	870	87
S4	SS	Bottom of Bushing	537	82	537	78	667	88	4,191	99
S Bolt	FB	Pedestal Base	1,822	66	1,822	108	1,926	175	378	145
Displacements (inches)										
@A3	FB	Top of Tank	1.6	130	1.6	24	1.1	72	.10	78
@A5	FB	C.G. of Bushing	1.5	44	1.5	56	-2.2	45	.14	39
@A7	FB	Top of Bushing	-2.4	92	-2.4	79	4.9	91	-.36	137
@A8	SS	Top of Bushing	1.0	37	1.0	156	-1.1	107	.04	84
@A9	V	Top of Bushing	0	89	0	37	0	62	0	66

Copyright © 2006 IEEE. All rights reserved.

Copyright The Institute of Electrical and Electronics Engineers, Inc.
Provided by IHS under license with IEEE
No reproduction or networking permitted without license from IHS
Not for Resale

Example of minimum information for test plan

1. Description of equipment.
2. Test facility name, location, telephone number, FAX number, and test dates.
3. Equipment (and support) setup. Provide description and sketches or pictures.
   a) Setup in-service configuration
   b) Anchorage of equipment base to shake-table (or to an adapter plate attached to shake-table) to be the same as in-service configuration. (If adapter plate is between equipment and table, then provide attachment details of adapter plate to table.)
   c) Discussion of equipment to be pressurized, filled with oil, gas, etc. and other conditional requirements, as applicable.
   d) Test equipment description (5.8) and calibration.
   e) Test method. Triaxial or biaxial (A.1.1).
4. Functional test. Description of functional tests, including electrical hook-ups, if any, and where test will be performed.
5. Performance level is high (or moderate).
6. Monitoring. Provide sketch(es) that show location of strain gauges, accelerometers, and displacement gauges, if any.
7. Provide testing program sequence.
   (**Example**: Assuming biaxial testing of sloped composite bushing, i.e., non-symmetrical in x and y axes, as set up. High performance level. After each test, equipment to be inspected and results logged.)
   a) Functional tests and setup equipment, install monitoring, and develop TRS (A.1.2.2)
   b) Static pull tests at ½ SML in x axis (A.2.2.3)
   c) Sine sweep in x axis at 0.1*g* and one octave per minute (A.1.2.1)
   d) Determine resonant frequencies in x axis and damping
   e) Sine beat in x axis at 1.0*g* and 0.8*g* in z axis, both measured at the flange (A.1.2.3)
   f) Time history in x axis at 2 times spectra shown in RRS and 80% of the horizontal in the z axis, both measured at the flange (A.1.2.2)
   g) Rotate equipment 90 degrees
   h) Static pull tests at 0.5 SML in y axis
   I) Sine sweep in y axis at 0.1*g* and one octave per minute
   j) Determine resonant frequencies in y axis and damping
   k) Sine beat in y axis at 1.0*g* and .8*g* in z axis, both measured at the flange
   l) Time history in y axis at 2 times spectra shown in figures and 80% of the horizontal in the z axis, both measured at the flange
   m) Sine sweep in z axis (vertical) at 0.1*g* and one octave per minute
   n) Determine resonant frequencies in z axis and damping
   o) Sine beat in z axis, if necessary, at 0.8*g* measured at the flange
8. Video. Provisions made for videotaping all tests.

--`,,```,,,,````-`-`,,`,,`,`,,`---
Copyright © 2006 IEEE. All rights reserved.

Copyright The Institute of Electrical and Electronics Engineers, Inc.
Provided by IHS under license with IEEE
No reproduction or networking permitted without license from IHS
Not for Resale

Copyright The Institute of Electrical and Electronics Engineers, Inc.
Provided by IHS under license with IEEE
No reproduction or networking permitted without license from IHS
Not for Resale

EXAMPLE OF "SEISMIC TEST-QUALIFICATION REPORT"

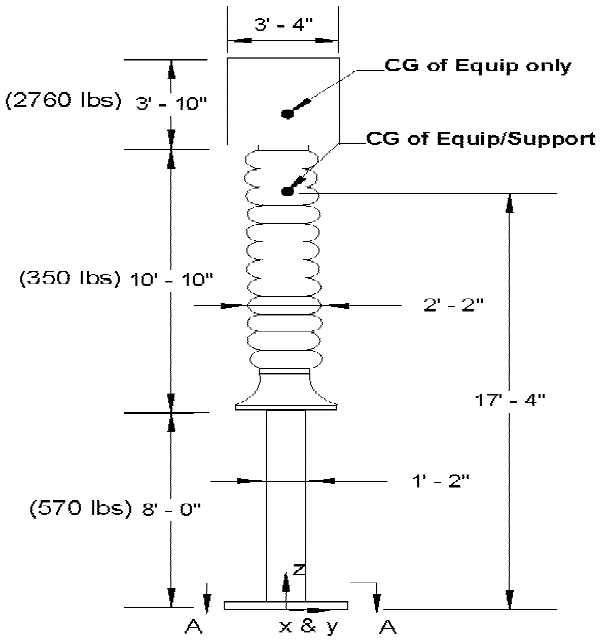

FRONT & SIDE VIEWS

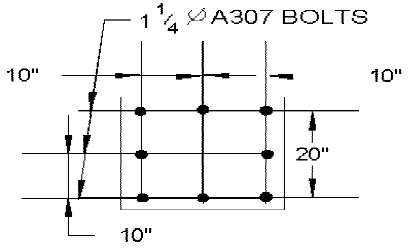

SECTION A - A
FOUNDATION ANCHOR BOLT PLAN

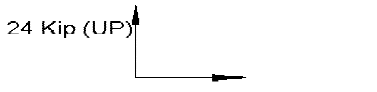

MAXIMUM LOAD
PER ANCHOR BOLT
(SEISMIC + DL)
(OPERATING LOAD IS ZERO)

DATA :

TOTAL WEIGHT	3, 680 LBS	
CG OF EQUIPMENT ONLY X - 0 Y - 0 Z - 19' - 11"		
NATURAL FREQUENCIES W/DAMPING :	2.6 Hz @ 2.9% DAMPING 19.5 Hz @ 1.9% DAMPING	
MAXIMUM DEFLECTION :	4.5 INCHES @ CONDUCTOR ATTACHMENT POINT	
QUALIFIED BY :	TIME HISTORY TEST	
MAX REACTION PER LEG @ BASE :	CASE 1 12 Kip SHEAR 120 Kip-Ft MOMENT 4.2 Kip DOWN	CASE 2 10 Kip SHEAR 105 Kip-Ft MOMENT 1.1 Kip UPLIFT
MANUFACTURER :	AGX CORPORATION	
DATE TESTED :	1/2006	

SEISMIC OUTLINE DRAWING

TYPE OF EQUIPMENT : SF6 COMPOSITE CURRENT TRANSFORMER
EQUIPMENT VOLTAGE: 230 kV
APPROVED BY : *John Expert*
REPORT OR CONTRACT NUMBER : 82186
QUALIFIED BY : IEEE 693 - 2005, LEVEL HIGH, ANNEX B

DRAWING NUMBER

Copyright © 2006 IEEE. All rights reserved.

Copyright The Institute of Electrical and Electronics Engineers, Inc.
Provided by IHS under license with IEEE
No reproduction or networking permitted without license from IHS
Not for Resale

EXAMPLE OF "SEISMIC TEST-QUALIFICATION REPORT" IN METRIC UNITS

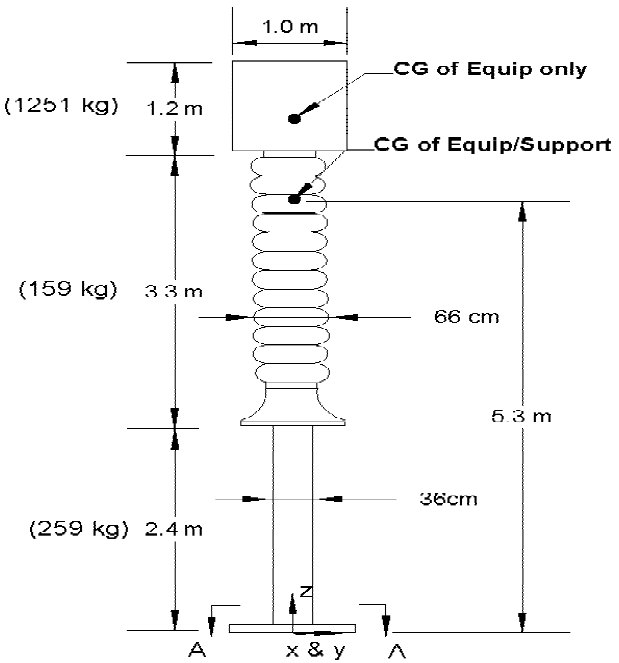

FRONT & SIDE VIEWS

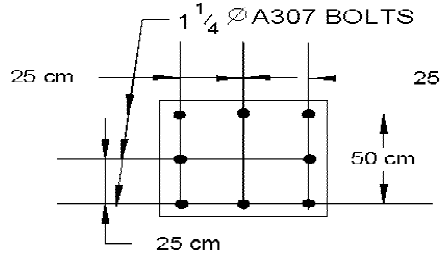

SECTION A - A
FOUNDATION ANCHOR BOLT PLAN

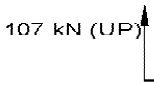

MAXIMUM LOAD
PER ANCHOR BOLT
(SEISMIC + DL)
(OPERATING LOAD IS ZERO)

DATA :

TOTAL WEIGHT	1669 kg	
CG OF EQUIPMENT ONLY		
X - 0		
Y - 0		
Z - 6.1 m		
NATURAL FREQUENCIES W/DAMPING :	2.6 Hz @ 2.9% DAMPING 19.5 Hz @ 1.9% DAMPING	
MAXIMUM DEFLECTION :	11 cm @ CONDUCTOR ATTACHMENT POINT	
QUALIFIED BY :	TIME HISTORY TEST	
MAX REACTION PER LEG @ BASE :	CASE 1 53 kN SHEAR 163 kN m MOMENT 19 kN DOWN	CASE 2 44 kN SHEAR 142 kN m MOMENT 5 kN UPLIFT
MANUFACTURER	AGX CORPORATION	
DATE TESTED :	1/2006	

SEISMIC OUTLINE DRAWING

TYPE OF EQUIPMENT : SF6 COMPOSITE CURRENT TRANSFORMER
EQUIPMENT VOLTAGE : 230 kV
APPROVED BY : *John Expert*
REPORT OR CONTRACT NUMBER : 82186
QUALIFIED BY : IEEE 693 - 2005, LEVEL HIGH, ANNEX B

DRAWING NUMBER

Copyright © 2006 IEEE. All rights reserved.

Annex U

(informative)

Specifications

Subclause 4.2 specifies the wordage for specifying IEEE Std 693. This annex provides templates of that wordage in English.

This template may be translated into other languages as needed.

Specifying IEEE 693

For the following equipment (Annexes C thru P):

Circuit breakers	Surge arresters
Transformers	Remote terminal units
Liquid filled reactors	Digital fault recorders
Disconnect switches	Sequence of events recorders
Grounding switches	Intelligent electronic devices
Voltage Transformers	Distribution panels
Capacitor Voltage Transformers	Switchboards
Coupling Capacitor Voltage Transformer	Solid state rectifiers
Current Transformer	Metalclad switchgear
Air core reactors	Cable terminators (potheads.)
Circuit switchers	Capacitors, series and shunt compensation
Insert "Suspended equipment - name type" such as "Suspended equipment - Wave Trap"	Gas-insulated switchgear
Station batteries and battery racks	Low-voltage control, instrumentation, and power supply equipment

Use the following specification:

The _____shall
Insert one or more of the equipment types given above. Include the support description, if a support is required

be qualified according to the requirements of IEEE 693-2005 and shall meet the requirements of the _____qualification level. (See Figure 1.1 - Using the recommended practice)
Insert High or Moderate

(If qualification is by testing, include the follow): **The test plan shall be submitted within ___calendar days of award of contract and the test shall be completed within ___calendar days of award of contract. The report shall be submitted within ___calendar days after testing is complete.**

(If by analysis, include): **The report shall be submitted __ calendar days after award of contract.**

For equipment not listed above, such as Voltage Divider or Voltage regulator,
Use the following (Annex B):

The _____shall
Insert equipment type. Include the support description, if a support is required.

be qualified according to the requirements of IEEE 693-2005 and shall meet the requirements of the _____qualification level. This equipment requires the use of Annex B.
Insert High or Moderate
(See Figure 1.1 - Using the recommended practice.)

Qualification shall be by _____.
Method: such as time history testing, sine-beat testing, static analysis, coefficient analysis, or dynamic analysis.

Monitoring shall be_____.
Monitoring requirements qualified by test.

Functional tests_____.
Give function tests requirements or state "Functional tests are not required."

(If qualification is by testing, include the following): **The test plan shall be submitted within ___calendar days of award of contract and the test shall be completed within ___calendar days of award of contract. The report shall be submitted within ___calendar days after testing is complete.**

(If by analysis, include): **The report shall be submitted __calendar days after award of contract.**

Copyright © 2006 IEEE. All rights reserved.

Copyright The Institute of Electrical and Electronics Engineers, Inc.
Provided by IHS under license with IEEE
No reproduction or networking permitted without license from IHS
Not for Resale

Annex V

(informative)

Bibliography

[B1] ANSI/AWS D1.1-2000, Structural Welding Code—Steel.[1]

[B2] ASCE (Draft 1997), Guide to Reliable Emergency Power for Lifelines and Critical Applications.

[B3] ASTM D2303-97, Standard Test Methods for Liquid-Contaminant, Inclined-Plane Tracking and Erosion of Insulating Materials.[2]

[B4] ASTM E1049-97, Standard Practices for Cycle Counting Fatigue Analysis.

[B5] Australian Standard AS 4435.4-1997, Insulators—Composite for Overhead Power Lines—Voltage Greater than 1000 V a.c., Definitions, Test Methods and Acceptance Criteria for Post Insulator Units, Standards Australia, Strathfield NSW, Australia.

[B6] *Canadian Foundation Engineering Manual*, 3d ed., Canadian Geotechnical Society, 1992.

[B7] Chopra, A. K., "Dynamics of Structures-A Primer," Earthquake Engineering Research Institute, Dec., 1980, pp. 73–88.

[B8] Downing, S. D., and Socie, D. F., "Simple rainflow counting algorithms," *International Journal of Fatigue*, vol. 4 no.1, pp. 31–40, 1982.

[B9] EPRI TR-102641, Project RP2925, *Database System of Power Plant Equipment Seismic Experience* (Software Manual), Electric Power Research Institute (EPRI), Palo Alto, CA, June 1993.

[B10] EPRI/SQUG, Seismic Qualification Utility Group's Report, "Generic Implementation Procedure (GIP) for Seismic Verification of Nuclear Plant Equipment," Revision 3A, ABS Consulting, MPR Associates, Inc., Stevenson & Associates, URS Corporation/John A. Blume & Associates, Engineers, Winston & Strawn, Dec. 2001.

[B11] Gupta, A. K., *Response Spectrum Method in Seismic Analysis and Design of Structures*. Boca Raton, FL: CRC Press, 1992.

[B12] IEC Committee Draft 36/118/CD, Project 1462, Composite Insulators—Hollow Insulators for Use in Outdoor and Indoor Electrical Equipment: Definitions, Test Methods, Acceptance Criteria and Design Recommendations, Issue 1, Mar. 1995.[3]

[B13] IEC 60587 (1984), Test Methods for Evaluating Resistance to Tracking and Erosion of Electrical Insulating Materials Used Under Severe Ambient Conditions.

[1] ANSI publications are available from the Sales Department, American National Standards Institute, 25 West 43rd Street, 4th Floor, New York, NY 10036, USA (http://www.ansi.org/).
[2] ASTM publications are available from the American Society for Testing and Materials, 100 Barr Harbor Drive, West Conshohocken, PA 19428-2959, USA (http://www.astm.org/).
[3] IEC publications are available from the Sales Department of the International Electrotechnical Commission, Case Postale 131, 3, rue de Varembé, CH-1211, Genève 20, Switzerland/Suisse (http://www.iec.ch/). IEC publications are also available in the United States from the Sales Department, American National Standards Institute, 25 West 43rd Street, 4th Floor, New York, NY 10036, USA (http:// www.ansi.org/).

Copyright © 2006 IEEE. All rights reserved.

Copyright The Institute of Electrical and Electronics Engineers, Inc.
Provided by IHS under license with IEEE
No reproduction or networking permitted without license from IHS
Not for Resale

[B14] IEC 60672-3 (1997-01), Ceramic and Glass Insulating Materials—Part 3: Specifications for Individual Materials.

[B15] IEC 61109 (1992-03), Composite Insulators for a.c. Overhead Lines with a Nominal Voltage Greater Than 100 V—Definitions, Test methods and Acceptance Criteria.

[B16] IEEE 100, *The Authoritative Dictionary of IEEE Standards Terms*, Seventh edition.[4, 5]

[B17] IEEE Std 344™-2004, IEEE Recommended Practices for Seismic Qualification of Class 1E Equipment for Nuclear Power Generating Stations.

[B18] IEEE Std 450-2002, IEEE Recommended Practice for Maintenance, Testing, and Replacement of Vented Lead-Acid Batteries for Stationary Applications.

[B19] IEEE Std 484-2002, IEEE Recommended Practice for the Installation, Design and Installation of Vented Lead-Acid Batteries for Stationary Applications.

[B20] IEEE Std 1106-2005, IEEE Recommended Practice for Installation, Maintenance, Testing, and Replacement of Vented Nickel-Cadmium Batteries for Stationary Applications.

[B21] IEEE Std 1133-1988, IEEE Application Guide for Evaluating Nonceramic Materials for High-Voltage Outdoor Applications.[6]

[B22] IEEE Std 1187-2002, IEEE Recommended Practice for Installation Design and Installation of Valve-Regulated Lead-Acid Storage Batteries for Stationary Applications.

[B23] IEEE Std 1527-2006, IEEE Recommended Practice for the Design of Flexible Buswork Located in Seismically Active Areas.

[B24] Kennedy, R. P., Personal Communication regarding development of input motion requirements for the Nuclear Regulatory Commission, RPK Structural Mechanics Consulting, 2004.

[B25] NEMA SG 4-2000, Alternating Current High Voltage Circuit Breakers.[7]

[B26] Takhirov, S., Fenves, G., Fujisaki, E., and Clyde, D., Ground Motions for Earthquake Simulator Qualification of Electrical Substation Equipment, Pacific Earthquake Engineering Research Center, University of California, Berkeley, 2005.

[4] IEEE publications are available from the Institute of Electrical and Electronics Engineers, Inc., 445 Hoes Lane, Piscataway, NJ 08854, USA (http://standards.ieee.org/).
[5] The IEEE standards or products referred to in this clause are trademarks of the Institute of Electrical and Electronics Engineers, Inc.
[6] IEEE 1133-1988 has been withdrawn; however, copies can be obtained from Global Engineering, 15 Inverness Way East, Englewood, CO 80112-5704, USA (http:// global.ihs.com/).
[7] NEMA publications are available from Global Engineering Documents, 15 Inverness Way East, Englewood, CO 80112, USA (http:// global.ihs.com/).

Copyright © 2006 IEEE. All rights reserved.
--`,,```,,,,````-`-`,,`,,`,`,,`---

Copyright The Institute of Electrical and Electronics Engineers, Inc.
Provided by IHS under license with IEEE
No reproduction or networking permitted without license from IHS
Not for Resale