IEEE N42.4 71 ■ 4805702 0055541 1 ■

ANSI

N42.4-1971

American National Standard for High Voltage Connectors for Nuclear Instruments

Secretariat

Institute of Electrical and Electronics Engineers, Inc.

Approved April 12, 1971
Reaffirmed March 19, 1991

American National Standards Institute

COPYRIGHT Institute of Electrical and Electronics Engineers, Inc
Licensed by Information Handling Services

American National Standard

An American National Standard implies a consensus of those substantially concerned with its scope and provisions. An American National Standard is intended as a guide to aid the manufacturer, the consumer, and the general public. The existence of an American National Standard does not in any respect preclude anyone, whether he has approved the standard or not, from manufacturing, marketing, purchasing, or using products, processes, or procedures not conforming to the standard. American National Standards are subject to periodic review and users are cautioned to obtain the latest editions.

CAUTION NOTICE: This American National Standard may be revised or withdrawn at any time. The procedures of the American National Standards Institute require that action be taken to reaffirm, revise, or withdraw this standard no later than five years from the date of publication. Purchasers of American National Standards may receive current information on all standards by calling or writing the American National Standards Institute.

© Copyright 1971 by
The Institute of Electrical and Electronics Engineers, Inc.

No part of this publication may be reproduced in any form, in an electronic retrieval system or otherwise, without the prior written permission of the publisher.

COPYRIGHT Institute of Electrical and Electronics Engineers, Inc
Licensed by Information Handling Services

Foreword

(This Foreword is not a part of American National Standard for High Voltage Connectors for Nuclear Instruments, N42.4-1971.)

This standard was proposed by American National Standards Committee N42 on Nuclear Instrumentation and adopted by ANSI in order to provide for interchangeability of safe high voltage connectors in nuclear instrument applications. The connectors are of the "safe" type in that the pin and socket contacts are well and securely recessed in the connector housing so that hand or body contact of the unmated connector with rated voltage applied will not result in electrical shock. It will be noted that the connectors covered by this standard are essentially identical to the NIM (Nuclear Instrumental Module) standard high voltage connectors specified in AEC Report TID-20893.

Suggestions for improvement gained in the use of this standard will be welcomed. They should be sent to the Secretariat for N42, Institute of Electrical and Electronics Engineers, 345 East 47th Street, New York, N. Y. 10017.

The American National Standards Committee N42 on Radiation Instrumentation had the following personnel the time it approved this standard:

Louis Costrell, *Chairman* David C. Cook, *Secretary*

Organization Represented	*Name of Representative*
American Chemical Society	Louis P. Remsberg, Jr
American Conference of Governmental Industrial Hygienists	Jesse Lieberman
American Industrial Hygiene Association	W. H. Ray
American Nuclear Society	W. C. Lipinski
	Thomas Mulcahey (*Alt*)
American Society of Mechanical Engineers	R. C. Austin
American Society of Safety Engineers	*Representation Vacant*
American Society for Testing and Materials	John L. Kuranz
	Jack Bystrom (*Alt*)
Atomic Industrial Forum	*Representation Vacant*
Electric Light and Power Group	G. S. Keeley
	G. A. Olson (*Alt*)
Health Physics Society	J. B. Horner Kuper
	Robert L. Butenhoff (*Alt*)
Institute of Electrical and Electronics Engineers	Louis Costrell
	Lester Kornblith, Jr
	J. J. Loving
	J. Forster (*Alt*)
Instrument Society of America	M. T. Slind
	J. E. Kaveckis (*Alt*)
Manufacturing Chemists Association	Mont G. Mason
National Electrical Manufacturers Association	Theodore Hamburger
Oak Ridge National Laboratory	Frank W. Manning
Scientific Apparatus Makers Association	Robert Breen
Underwriters' Laboratories	Leonard Horn
U. S. Atomic Energy Commission, Division of Biology and Medicine	Hodge R. Wasson
U. S. Atomic Energy Commission, Division of Reactor Development and Technology	Paul L. Havenstein
	W. E. Womac (*Alt*)
U. S. Department of the Army, Materiel Command	Abraham E. Cohen
U. S. Department of the Army, Office of Civil Defense Mobilization	Carl R. Siebentritt, Jr
	Ronald H. Sandwina (*Alt*)
U. S. Department of Commerce, National Bureau of Standards	Louis Costrell
U. S. Department of Health, Education, and Welfare, Public Health Service	Henry J. L. Rechen, Jr
	Roger Schneider (*Alt*)
U. S. Naval Research Laboratory	D. C. Cook
Members-at-Large	O. W. Bilharz
	S. H. Hanauer
	John M. Gallagher, Jr
	Voss A. Moore
	R. F. Shea

COPYRIGHT Institute of Electrical and Electronics Engineers, Inc
Licensed by Information Handling Services

American National Standard for High Voltage Connectors for Nuclear Instruments

1. Scope

This standard is applicable to coaxial high voltage connectors on nuclear instruments for dc applications up to 5000 volts and ac applications up to 3500 volts rms at 60 Hz. The connectors may also be used at higher frequencies provided the operating voltage is appropriately reduced.

2. Standard Connector

2.1 General. The connectors shall be in accordance with Figs. 1 and 2. These connectors are of the "safe" type in that the pin and socket contacts are well and securely recessed in the connector housings so that hand or body contact of the unmated connector with rated voltage applied will not result in electrical shock.

2.2 Mechanical Integrity. The mechanical construction shall be such that, even where the center wire loosens or develops slack, the 0.238/0.262 inch (6.05/6.65 mm) dimension of the plug and the 0.188/0.208 inch (4.78/5.28 mm) dimension of the receptacle shall be maintained when a force of up to 6 pounds (27 newtons) is applied to the contact in either direction.

2.3 Connector Mating. In the mated condition the longitudinal force of the spring of the coupling mechanism shall exceed the pressure exerted by the sealing gasket by an amount necessary to ensure butting of the outer contacts at the reference plane. In the mated condition the resistance between the center contact pin and the center contact socket shall not exceed 2.1 milliohms and the outer contact resistance shall not exceed 1.5 milliohms. Gage tests shall be as follows:

Center Contact Socket Gage Test

Oversize Test Pin	0.057 inch (1.45 mm) min dia
Number of Insertions	1
Insertion Depth — (For All Tests)	0.125 inch (3.18 mm) min at gaging dia
Insertion Force Test: Steel Test Pin Dia	0.054 inch (1.37 mm) min
Test Pin Finish	16 microinch (0.00041 mm)
Insertion Force	2 pounds (9 newtons) max
Withdrawal Force Test: Steel Test Pin Dia	0.052 inch (1.32 mm) max
Test Pin Finish	16 microinch (0.00041 mm)
Withdrawal Force	2 ounces (0.56 newtons) min

Outer Spring Contact Gage Test

Test Ring ID ..... 0.319 inch (8.10 mm) max, 16 microinch (0.00041 mm) finish
Insertion Force ..... 5 pounds (22 newtons) max when inserted min of 0.093 inch (2.36 mm)
All spring members shall contact 0.324 inch (8.23 mm) min ring within 0.050 inch (1.27 mm) of their tip ends.

COPYRIGHT Institute of Electrical and Electronics Engineers, Inc
Licensed by Information Handling Services

2.4 Insulation. The insulation shall be polytetrafluorethylene.

2.5 Finish. Center contacts shall be gold plated with a minimum thickness of 0.0001 inch (0.0025 mm) *with no silver underplate.* All other parts shall be finished so as to provide a connector that meets the requirements of this standard.

2.6 Insulation Resistance. The insulation resistance shall be 10^{12} ohms minimum at 50 percent relative humidity at 25° C.

2.7 Dielectric Withstanding Voltage. Must withstand 10,000 volts dc and 5000 volts rms, 60 Hz, for 1 minute.

2.8 Altitude/Corona. Corona level shall be 350 volts minimum at 70,000 feet (21,300 m) altitude with cable length of 60 inches (1.52 m).

2.9 Retention Engagement and Disengagement Forces.

(1) Minimum cable retention force shall be as follows:

For Crimp Types
- 50 pounds (224 newtons) for cables 0.175 - 0.199 inch (4.44 - 5.05 mm) od
- 60 pounds (269 newtons) for cables 0.200 - 0.249 inch (5.08 - 6.32 mm) od
- 75 pounds (336 newtons) for cables 0.250 inch (6.35 mm) od and larger

For Non-crimp Types - 40 pounds (179 newtons)

(2) Minimum bayonet sleeve retention force shall be as follows:

100 pounds (448 newtons)

(3) Maximum force to engage and disengage shall be as follows:

Longitudinal Force... 3 pounds (13 newtons)
Torque...60 inch ounces (0.42 newton meter)

2.10 Durability. A connector assembly shall be capable of being mated and unmated at least 500 times with no evidence of physical damage which could affect the mechanical or electrical performance of the connector.

2.11 Pressure/Vacuum Seal. The pressurized feed thru shall have a leakage rate of not more than 1×10^{-9} milliliters per second of helium tracer gas when one side is at 1 atmosphere pressure, 15 pounds per square inch ($1.03 \times 10^5 N/m^2$), at 25° C. and the other side is at a "vacuum" of not greater than 0.03937 inches (1.000 mm) of mercury absolute (not greater than 1 torr).

2.12 Corrosion. Connectors shall be exposed to a 5 percent salt solution at 35° C for 48 hours. After exposure, the connectors shall be washed, shaken and lightly brushed and then permitted to dry for 24 hours at 40° C. Connectors shall then show no sign of corrosion or pitting and shall meet the specifications herein regarding maximum force to engage and disengage.

2.13 Moisture Resistance. Connectors shall meet the following moisture resistance test: Connectors shall be exposed to 95 percent relative humidity at 40° C for 96 hours. Connectors shall then be removed to an environment of 50 percent relative humidity at 25° C. Within 5 minutes after removal from the 95 percent relative humidity, 40° C environment, the insulation resistance shall be not less than 10^{12} ohms.

2.14 Temperature Range. The connector shall be capable of operating within the specifications herein over the temperature range of −65° C to +200° C.

COPYRIGHT Institute of Electrical and Electronics Engineers, Inc
Licensed by Information Handling Services

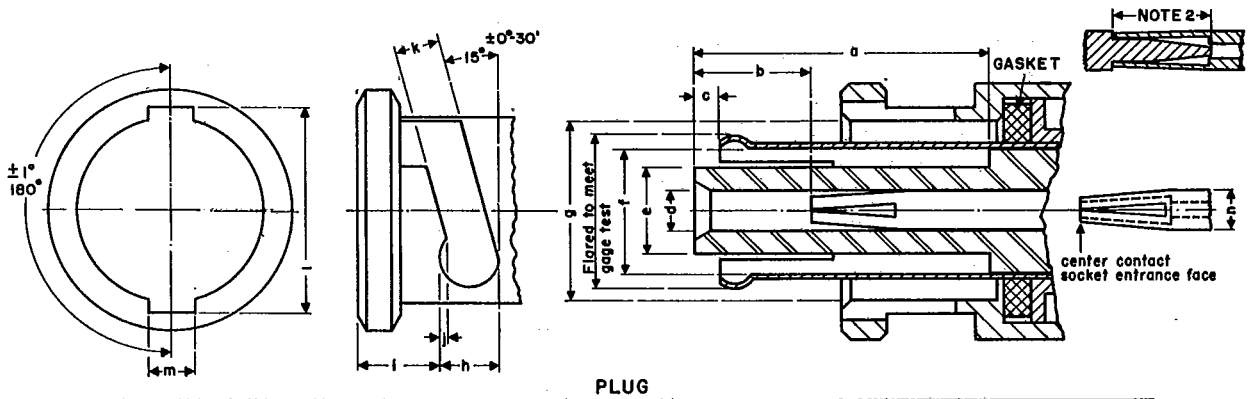

PLUG

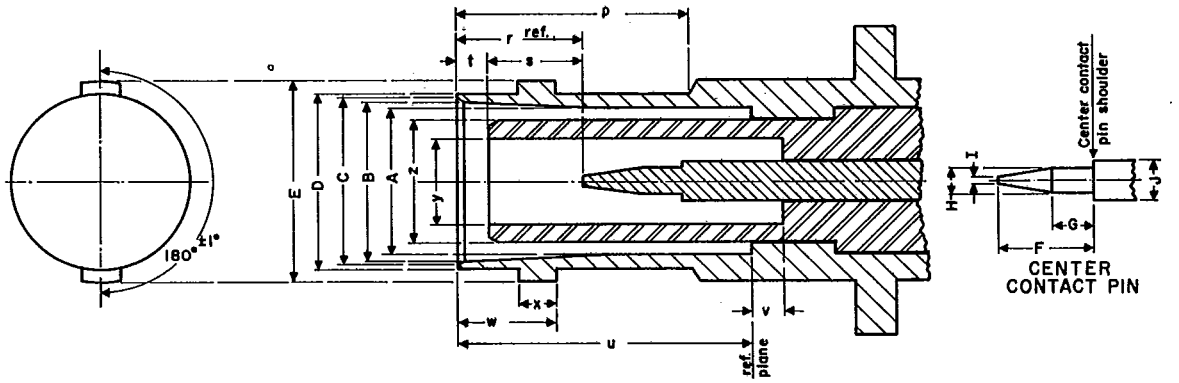

RECEPTACLE

REF	INCHES		MILLIMETERS✚	
	MIN.	MAX.	MIN.	MAX.
a	0.628	0.632	15.96	16.05
b	0.238	0.262	6.05	6.65
c	0.046	0.064	1.17	1.63
d	0.082	——	2.08	——
e	0.180	0.186	4.57	4.72
f	0.264	——	6.71	——
g	0.385	0.390	9.78	9.91
h	0.124	——	3.15	——
i	0.180	0.184	4.57	4.67
j	0.018	0.022	0.46	0.56
k	0.091	0.097	2.31	2.46
l	0.463	0.473	11.76	12.01
m	0.091	0.097	2.31	2.46
n	0.081	0.083	2.06	2.11
p	0.427	——	10.85	——
r	0.249	0.286	6.32	7.26
s	0.188	0.208	4.78	5.28
t	0.061	0.078	1.55	1.98
u	0.626	0.630	15.90	16.00
v	0.064	0.086	1.63	2.18
w	0.204	0.208	5.18	5.28
x	0.075	0.081	1.90	2.06
y	0.190	0.196	4.83	4.98
z	——	0.260	——	6.60

REF.	INCHES		MILLIMETERS✚	
	MIN.	MAX.	MIN.	MAX.
A	0.319	0.321	8.10	8.15
B	0.328	0.333	8.33	8.46
C	0.347	0.357	8.81	9.07
D	0.378	0.382	9.60	9.70
E	0.432	0.436	10.97	11.07
F	0.207	0.214	5.26	5.44
G	0.130	——	3.30	——
H	0.052	0.054	1.32	1.37
I	0.015	0.025	0.38	0.64
J	0.081	0.083	2.06	2.11

✚ SEE NOTE 1.

NOTES:
1. THE MILLIMETER DIMENSIONS ARE DERIVED FROM THE ORIGINAL INCH DIMENSIONS.
2. CENTER CONTACT SOCKET MUST ACCEPT MAXIMUM LENGTH CENTER CONTACT PIN OF 0.214 INCH (5.44 mm) AS SHOWN. INTERNAL DESIGN OPTIONAL.

Fig. 1 Mating Dimensions

COPYRIGHT Institute of Electrical and Electronics Engineers, Inc
Licensed by Information Handling Services

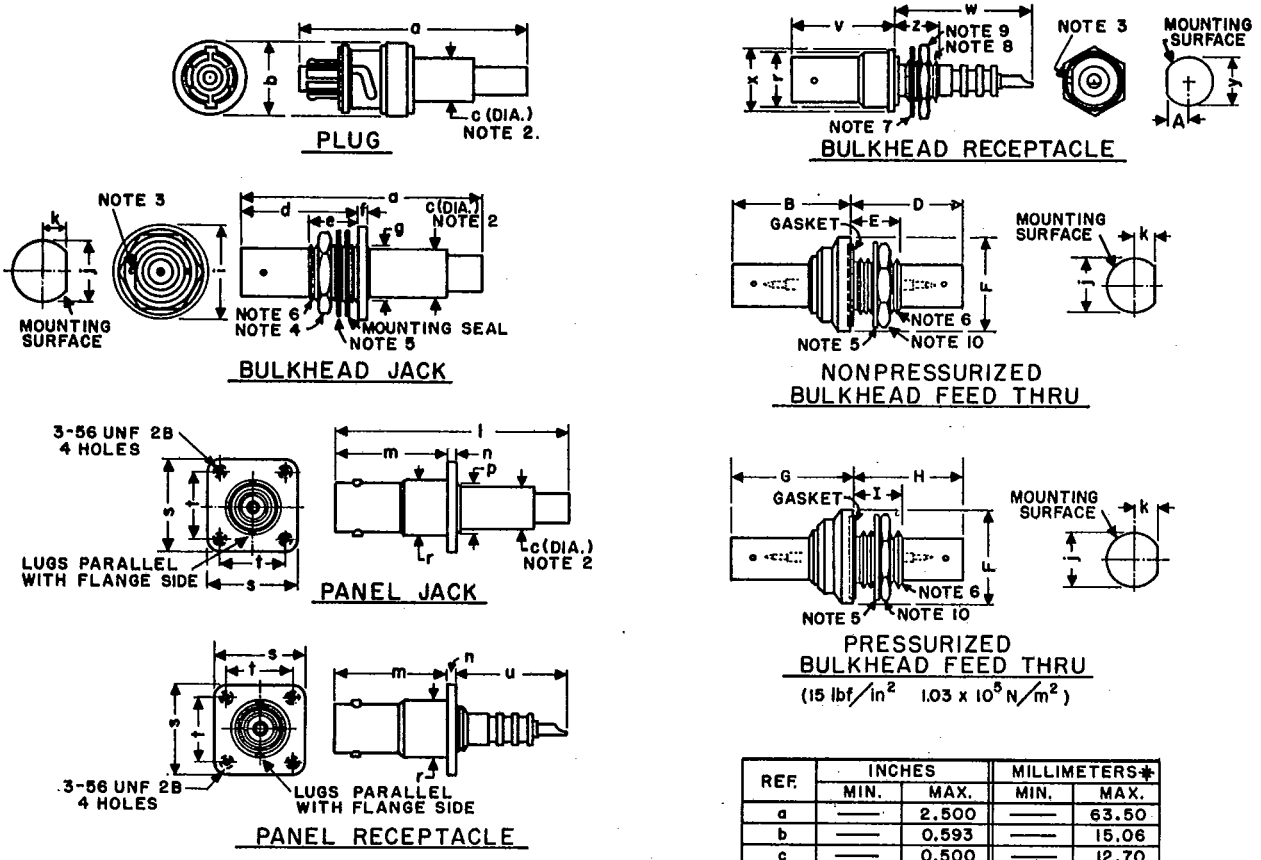

NOTES:

1. THE MILLIMETER DIMENSIONS ARE DERIVED FROM THE ORIGINAL INCH DIMENSIONS.
2. THE MAXIMUM DIAMETER SPECIFIED INCLUDES CLAMPING HARDWARE.
3. BAYONET LUGS TO BE IN LINE WITH MOUNTING FLAT AS INDICATED.
4. JAM NUT 0.625 ±0.005 INCH (15.88 ±0.13 mm) ACROSS FLATS X 0.109 ±0.005 INCH (2.77 ±0.13 mm) THICK.
5. LOCKWASHER, INTERNAL, 0.630 ±0.005 INCH (1.60 ±0.13 mm) MAX. O.D. X 0.022 ±0.005 INCH (0.56 ±0.13 mm) THICK.
6. THREAD – 1/2-28 UNEF-2A.
7. LOCKWASHER, INTERNAL, 0.510 ±0.005 INCH (12.95 ±0.13 mm), MAX. O.D. X 0.022 ±0.005 INCH (0.56 ±0.13 mm) THICK.
8. THREAD – 3/8-32 UNEF-2A.
9. JAM NUT 0.500 ±0.005 INCH (12.70 ±0.13 mm) ACROSS FLATS X 0.125 ±0.005 INCH (3.18 ±0.13 mm) THICK.
10. HEXAGONAL NUT 1/2-28 UNEF-2B, 0.109 ±0.005 INCH (2.77 ±0.13 mm) THICK.

REF.	INCHES		MILLIMETERS✱	
	MIN.	MAX.	MIN.	MAX.
a	——	2.500	——	63.50
b	——	0.593	——	15.06
c	——	0.500	——	12.70
d	0.796	0.816	20.22	20.73
e	0.349	——	8.87	——
f	0.120	0.130	3.05	3.30
g	——	0.600	——	15.24
j	0.677	0.697	17.20	17.70
j	0.495	0.500	12.57	12.70
k	0.215	0.218	5.46	5.54
l	——	2.500	——	63.50
m	0.840	0.870	21.34	22.10
n	0.075	0.095	1.90	2.41
p	——	0.600	——	15.24
r	——	0.440	——	11.18
s	0.682	0.692	17.32	17.58
t	0.496	0.504	12.60	12.80
u	0.812	0.874	20.62	22.20
v	0.745	0.775	18.92	19.68
w	0.985	1.047	25.02	26.59
x	0.495	0.505	12.57	12.83
y	0.360	0.380	9.14	9.65
z	0.320	——	8.13	——
A	0.153	0.156	3.89	3.96
B	——	1.072	——	27.23
D	——	1.300	——	33.02
E	0.349	——	8.86	——
F	0.682	0.692	17.32	17.58
G	——	1.500	——	38.10
H	——	1.500	——	38.10
I	0.625	——	15.88	——

✱ SEE NOTE 1.

Fig. 2 Outline Dimensions

COPYRIGHT Institute of Electrical and Electronics Engineers, Inc
Licensed by Information Handling Services