ANSI C63.16-1993

American National Standard Guide for Electrostatic Discharge Test Methodologies and Criteria for Electronic Equipment

Circuits and Devices

Communications Technology

Computer

Electromagnetics and Radiation

IEEE Power Engineering Society

Sponsored by the
Transmission and Distribution Committee

Industrial Applications

Signals and Applications

Standards Coordinating Committees

ANSI C63.16-1993

IEEE

Published by the Institute of Electrical and Electronics Engineers, Inc., 345 East 47th Street, New York, NY 10017, USA.

March 15, 1994

SH17111

Copyright The Institute of Electrical and Electronics Engineers, Inc.
Provided by IHS under license with IEEE
No reproduction or networking permitted without license from IHS

Not for Resale

ANSI C63.16-1993

American National Standard Guide for Electrostatic Discharge Test Methodologies and Criteria for Electronic Equipment

Accredited Standards Committee on Electromagnetic Compatibility, C63

accredited by the

American National Standards Institute

Secretariat

Institute of Electrical and Electronics Engineers, Inc.

Approved November 22, 1993

American National Standards Institute

Abstract: Based upon ESD events on electronic equipment in actual-use environments, a process to establish ESD test criteria is provided. Test procedures for highly repeatable ESD immunity evaluation of tabletop and floor-standing equipment are described. Simulator characteristics for hand/metal and furniture ESD testing are specified both for air and contact discharge methods. Statistical criteria is given to determine the number of test trials required, based on the confidence factor desired and various pass/fail categories. This ANSI ESD guide has been harmonized with other international ESD standards except where other standards have technical approaches that would reduce equipment quality or result in degraded product operation.

Keywords: air discharge, contact discharge, coupling plane, direct discharge, electrostatic discharge (ESD), ESD event, ESD simulator, ESD test criteria, ESD waveform characterization, furniture ESD, hand/metal ESD, human/touch ESD, indirect discharge

---

The Institute of Electrical and Electronics Engineers, Inc.
345 East 47th Street, New York, NY 10017-2394, USA

Copyright © 1994 by the Institute of Electrical and Electronics Engineers, Inc.
All rights reserved. Published 1994. Printed in the United States of America.

ISBN 1-55937-403-9

No part of this publication may be reproduced in any form, in an electronic retrieval system or otherwise, without the prior written permission of the publisher.

Copyright The Institute of Electrical and Electronics Engineers, Inc.
Provided by IHS under license with IEEE
No reproduction or networking permitted without license from IHS

Not for Resale

American National Standard

An American National Standard implies a consensus of those substantially concerned with its scope and provisions. An American National Standard is intended as a guide to aid the manufacturer, the consumer, and the general public. The existence of an American National Standard does not in any respect preclude anyone, whether he has approved the standard or not, from manufacturing, marketing, purchasing, or using products, processes, or procedures not conforming to the standard. American National Standards are subject to periodic reviews and users are cautioned to obtain the latest editions.

CAUTION NOTICE: This American National Standard may be revised or withdrawn at any time. The procedures of the American National Standards Institute require that action be taken to reaffirm, revise, or withdraw this standard no later than five years from the date of publication. Purchasers of American National Standards may receive current information on all standards by calling or writing the American National Standards Institute.

Copyright The Institute of Electrical and Electronics Engineers, Inc.
Provided by IHS under license with IEEE
No reproduction or networking permitted without license from IHS
Not for Resale

Introduction

(This introduction is not a part of ANSI C63.16-1993, American National Standard Guide for Electrostatic Discharge Test Methodologies and Criteria for Electronic Equipment.)

This document is intended to serve as a guide when performing electrostatic discharge (ESD) testing. It incorporates the latest research in ESD waveform characterization and strives to ensure product quality through proper operation in actual equipment installations. The suggestions provided herein should not be construed as mandatory nor should they be blindly applied to all types of electronic equipment. Performance or acceptance test levels are not given in this document. The specification of performance or acceptance levels for any particular type of electronic equipment properly remains the prerogative of manufacturers and users of the particular equipment.

Two models, the human body with metal object model (hand/metal) and the furniture discharge model are used for each testing methodology. Indirect contact testing to coupling planes is described for each testing methodology. Test descriptions for floor-standing and tabletop electronic equipment are given. Statistical criteria is given to determine the number of test trials based on the confidence factor desired and various pass/fail categories.

Although it was the intent to harmonize this ANSI guide wherever possible with IEC 801-2 (1991), the technical differences between the two guides are such that a complete harmonization is impossible. This ANSI guide includes information and guidance not included in that document, such as: furniture ESD simulation, statistical determination of the number of ESD discharges per test point, confidence level solution, and, probably most importantly, test waveforms more closely depicting the ESD waveforms as they occur in equipment installations.

Because of the complexity of ESD, the variations in types of electronic equipment, and the many different actual use environments, it is a necessity for the reader to review and understand this guide in its entirety prior to commencing equipment testing.

At the time this guide was completed, the working group under Subcommittee 1 of ANSI Committee C63, which developed this guide, had the following membership:

David M. Staggs, *Chair* **William T. Rhoades,** *Vice Chair*

Daniel J. Pratt, *Secretary*

Steve Bloom	Hugh Hyatt	Henry Ott
Warren Boxleitner	W. Michael King	Robert Reninnger
Franz Gisin	John Maas	Peter Richman
Andy Hish	Hans Mellberg	T. J. Ritenour
Daniel D. Hoolihan	Michael Noble	Mark Sanesi

At the time that the Accredited Standards Committee on Electromagnetic Compatibility, C63, approved this guide, it had the following membership:

Ralph M. Showers, *Chair* **Edwin L. Bronaugh,** *Vice Chair*

Luigi Napoli, *Secretary*

Organization Represented	*Name of Representative*
Aeronautical Radio, Inc. (ARINC)	Mark Quigley
Amador Corporation	Daniel D. Hoolihan
	James Johnson *(Alt.)*
American Council of Independent Laboratories	William K. Hayes
Association of American Railroads	Chris Allman

Copyright The Institute of Electrical and Electronics Engineers, Inc.
Provided by IHS under license with IEEE
No reproduction or networking permitted without license from IHS
Not for Resale

Organization Represented	*Name of Representative*
Association of Telecommunications Attorneys	Glen Dash
	Jon Curtis *(Alt.)*
AT&T Bell Laboratories	H. Robert Hofmann
Canadian Standards Association	F. Diamente
Computer and Business Equipment Manufacturing Association	Ralph Calcavecchio
	William F. Hanrahan
Electric Light and Power Group	William Logan
	Matthew C. Mingoia *(Alt.)*
Electronic Industries Association	Ralph Justus
Exchange Carriers Standards Association	John Lichtig
	Peter J. Pallesen *(Alt.)*
	Michael Parente *(Alt.)*
Federal Communications Commission	Art Wall
	Hugh L. Van Tuyl *(Alt.)*
Food and Drug Administration	Paul Ruggera
	Jeffrey Silberberg *(Alt.)*
Institute of Electrical and Electronics Engineers, Inc.	Edwin L. Bronaugh
	Donald N. Heirman
	Nestor Kolcio
National Association of Broadcasters	Michael C. Rau
	Kelly Williams *(Alt.)*
National Electrical Manufacturers Association	Ronald Harrold
	Lawrence Ward
National Institute of Standards and Technology	Myron Crawford
National Telecommunications and Information Administration	Karl Nebbia
Personal Computer	Bill Wong
Scientific Apparatus Manufacturers Association	Ray Magnuson
Security Industry Association	Bob Brunius
Society of Automotive Engineers	Herbert Mertel
Telecommunications Industry Association	Eric Schimmel
Underwriters Laboratories	Willard Tuthill
	Wolf Josenhans *(Alt.)*
Unisys Corporation	Wallace Amos
US Air Force	John Zentner
	Dennis Baseley *(Alt.)*
US Dept. of Energy—Bonneville Power Administration	Vernon L. Chartier
US Dept. of Energy—Western Area Power Administration	Pete R. Hanson
US Dept. of the Army, Communications Electronic Command	David Cofield
US Dept. of the Navy, Space and Naval Warfare Systems Command	Stephen Caine
US Dept. of Transportation —Federal Aviation Administration	Robert Frazier
Members-at-Large	Robert Eagan
	Harold Gauper
	A. Heath Light
	Richard Schulz
	Ralph M. Showers
	Louis Slesin
	Chester L. Smith
	Leonard W. Thomas, Sr.
	J. L. Norman Violette

Valerie E. Zelenty
IEEE Standards Project Editor

Copyright The Institute of Electrical and Electronics Engineers, Inc.
Provided by IHS under license with IEEE
No reproduction or networking permitted without license from IHS
Not for Resale

Contents

CLAUSE PAGE

1. Scope 1

2. Overview 1

2.1 General 1
2.2 Comparison with other ESD standards 2

3. References 2

4. Definitions 3

5. Safety—ESD test operator cautions 4

6. Laboratory test conditions 4

6.1 Climatic conditions 5
6.2 Air breakdown voltage test value 5
6.3 Electromagnetic conditions 5
6.4 Test site description 5

7. Test methods 6

7.1 Test method guidance 6
7.2 Performance of the ESD simulator 7
7.3 Application of the discharges 7
7.4 Test setup 7
7.5 Laboratory test procedures 14
7.6 On-site test setup 17
7.7 On-site test procedures 18

8. Establishing ESD test criteria 19

8.1 Basis for establishing an ESD test criteria 19
8.2 ESD responses 19
8.3 A three-phase process to establishing an ESD test criteria 20
8.4 Test data records 24

9. Verification of ESD simulator performance 24

9.1 Test equipment 25
9.2 Verification tests 25
9.3 Air discharge simulator verification—Performance measurement 27
9.4 Contact discharge simulator verification—Performance measurement 29

10. Bibliography 30

Copyright The Institute of Electrical and Electronics Engineers, Inc.
Provided by IHS under license with IEEE
No reproduction or networking permitted without license from IHS
Not for Resale

ANNEX		PAGE
A	ESD simulator characteristics and description	32
B	Standard target descriptions	38
C	Example procedure for establishing an ESD test criteria	46
D	Test method guidance—Air or contact discharge	50
E	Actual ESD event waveforms	52
F	Correlation to other ESD test standards	56
G	Vertical coupling plane (VCP) test considerations	58

Copyright The Institute of Electrical and Electronics Engineers, Inc.
Provided by IHS under license with IEEE
No reproduction or networking permitted without license from IHS

Not for Resale

American National Standard Guide for Electrostatic Discharge Test Methodologies and Criteria for Electronic Equipment

1. Scope

This guide describes methodologies for electrostatic discharge (ESD) testing of electronic equipment. The test methods and parameters described herein are chosen for standardization and repeatability of test results. This guide also recommends test criteria for evaluating equipment exposure and response to ESD. This guide does not set ESD test limits nor deal with equipment transient response to lightning, high-voltage breakdown, dielectric withstand, power line corona, or nuclear electromagnetic pulse.

2. Overview

2.1 General

An ESD event occurs when the local electric field between two bodies at different potentials exceeds the dielectric strength of air. When the ESD event occurs, the resulting current flow produces both magnetic and electric fields.

The nature of the ESD event has resulted in the following two testing philosophies:

a) Air discharge test
b) Contact discharge test

The goal in both cases is to determine the immunity of the equipment under test (EUT) to an ESD event.

The air discharge simulator attempts to reproduce the actual ESD occurrence by creating a spark in air. This approach may not produce repeatable waveforms [B6], [B23].[1] In the contact discharge simulator, the arc occurs inside the simulator under controlled conditions. This approach yields a repeatable waveform [B17]. The information in 7.1.1 and annex D will assist the user in determining the test method that is most suitable for the application.

Further information about actual ESD events may be found in annex E of this guide and in IEEE Std C62.47-1992[2].

[1]The numbers in brackets correspond to those in the bibliography in clause 10.

[2]Information on references can be found in clause 3.

Copyright The Institute of Electrical and Electronics Engineers, Inc.
Provided by IHS under license with IEEE
No reproduction or networking permitted without license from IHS
Not for Resale

2.2 Comparison with other ESD standards

This guide is written with reference to existing and draft international ESD standards, especially IEC 801-2 (1991) and CISPR 24. It is a guide, not a standard. As a guide, it should not be considered to be in conflict with these standards; rather, this guide will enhance them, improving ESD testing of equipment and the quality of that equipment as a result of the additional information presented. [Comparisons between IEC 801-2 (1991) and this guide are given in annex F.]

This guide includes all of the main elements of the IEC 801-2 (1991) and CISPR 24 standards: the contact discharge method, the hand/metal source model, and the direct and indirect applications of ESD events to the EUT. This guide also includes information and material not found in these standards. This information is needed to complete the goals of ESD testing, primarily

— To ensure the quality of products and equipment through proper operation in actual-use environments (where ESD events occur)
— To have an ESD testing and evaluation procedure that is both realistic and workable, and that yields repeatable results

The key enhancements toward understanding ESD processes provided by this guide are as follows:

a) A more complete treatment of the air discharge test method (including a more accurate specification and verification of the simulator's performance)
b) Information comparing actual ESD events as they occur in nature to the parameters recommended in this guide
c) Information comparing the parameters of this guide to those of IEC 801-2 (1991)
d) Guidance on when to use the air discharge method and when to use the contact discharge method (including advantages and disadvantages of each method)
e) A source model that simulates discharges from mobile office furnishings
f) Statistical guidance for selecting test voltage levels, number of test trials, and evaluation of test results, instead of an arbitrary voltage limit and number of discharges

The statistical guidance will help the user of this guide locate product susceptibility windows, which is crucial for testing any equipment that has time-variant operational states, such as information technology equipment (ITE).

3. References

This guide shall be used in conjunction with the following standards. When the following standards are superseded by an approved revision, the revision shall apply.

CISPR 24, Immunity of ITE—Part 2 (ESD), draft, Dec. 1989.[3]

IEC 801-2 (1991), Electromagnetic compatibility for industrial-process measurement and control equipment—Part 2: Electrostatic discharge requirements.[4]

IEEE Std C62.47-1992, IEEE Guide on Electrostatic Discharge (ESD)—Characterization for the ESD Environment.[5]

---

[3]CISPR publications are available from the International Electrotechnical Commission, 3 rue de Varembé, Case Postale 131, CH 1211, Genève 20, Switzerland/Suisse. CISPR documents are also available in the United States from the Sales Department, American National Standards Institute, 11 West 42nd Street, 13th Floor, New York, NY 10036, USA.

[4]IEC publications are available from IEC Sales Department, 3 rue de Varembé, Case Postale 131, CH-1211, Genève 20, Switzerland/Suisse. IEC publications are also available in the United States from the Sales Department, American National Standards Institute, 11 West 42nd Street, 13th Floor, New York, NY 10036, USA.

[5]IEEE publications are available from the Institute of Electrical and Electronics Engineers, 445 Hoes Lane, P.O. Box 1331, Piscataway, NJ 08855-1331, USA.

Copyright The Institute of Electrical and Electronics Engineers, Inc.
Provided by IHS under license with IEEE
No reproduction or networking permitted without license from IHS Not for Resale

4. Definitions

4.1 actual ESD events: Nonsimulated electrostatic discharges that occur in the intended environment of the electronic equipment.

4.2 air discharge method: A method of ESD testing in which the charged electrode of the ESD simulator approaches the EUT or coupling plane regardless of the conductivity of the ESD receptor. The discharge is actuated by a spark in air to the EUT or coupling plane.

4.3 charging current: The maximum continuous current at any charge voltage that may flow at the ESD simulator probe tip as measured to the return path of the simulator through a 1500 Ω resistor that is connected to the probe tip.

4.4 contact discharge method: A method of ESD testing in which the electrode of the ESD simulator is in firm contact with a conductive surface of the EUT or coupling plane prior to discharge. The discharge is actuated by a switching device (i.e., a relay) within the simulator.

4.5 controlled ESD environment: One in which an attempt is made to maintain charge levels on humans and objects below a certain level. Typical control measures include humidity controls, equipment earth grounding, use of antistatic materials, ionized air, and high-resistance discharge paths for humans.

4.6 coupling plane: A metal plate to which discharges are applied to simulate electrostatic discharge to objects adjacent (vertically or horizontally) to the EUT. *See also:* **HCP, VCP.**

4.7 direct ESD test: A test in which ESD is applied directly to the surface or structure of the EUT.

4.8 electrostatic discharge (ESD): The sudden transfer of charge between bodies of differing electrostatic potentials.

4.9 ESD event: The occurrence of a single ESD.

4.10 ESD receptor: The surface (or target) of the object at rest being subjected to the ESD event.

4.11 ESD response: The EUT reaction to ESD.

4.12 ESD simulator: A testing device used to simulate a human or furniture ESD event.

4.13 ESD test voltage: The amplitude (usually expressed in kV) of the initial electrostatic voltage that exists prior to discharge.

4.14 EUT: Equipment under test.

4.15 exerciser: A device used to operate the EUT.

4.16 failure: The inability of a product to meet its operating specification.

4.17 furniture ESD: An ESD in which the intruder is an inanimate object such as a cart or chair, with or without a human in physical contact with the object.

4.18 ground reference plane (GRP): A flat conductive surface whose potential is used as a common reference. Where applicable, the operating voltage of the EUT and the operator ground should also be referenced to the ground plane.

4.19 hand/metal ESD: An ESD from an intruding human hand that occurs from an intervening metal object such as a ring, tool, key, etc. *Also called:* hand/metal discharge.

4.20 HCP: Horizontal coupling plane. *See:* **coupling plane.**

Copyright The Institute of Electrical and Electronics Engineers, Inc.
Provided by IHS under license with IEEE
No reproduction or networking permitted without license from IHS
Not for Resale

4.21 holding time: The interval of time within which the decrease of the test voltage due to leakage, prior to the discharge, is not greater than 10% when measured with an instrument that has a dc resistance greater than 10^{16} Ω and a capacitance less than 10 pF.

4.22 human/touch ESD: The ESD that occurs directly from a human fingertip, without the presence of any metallic structure in the ESD path.

4.23 indirect ESD test: A test in which ESD is applied to a coupling plane in the vicinity of the EUT.

4.24 intruder: A body that is in motion in an ESD event. The intruder is usually, but not necessarily, charged relative to its surroundings. It is always at a potential different from that of the receptor.

4.25 simulated ESD: An ESD that originates from an ESD simulator.

4.26 simulator approach speed: The rate at which an air discharge ESD simulator approaches the EUT or coupling plane.

4.27 table ESD test: An indirect test in which ESD is applied to the HCP.

4.28 uncontrolled ESD environment: One in which no attempt is made to maintain charge levels on humans and objects below a certain level.

4.29 undesirable response rate: The percentage of undesirable ESD responses exhibited by the EUT when subjected to a specific number of ESD events.

4.30 VCP: Vertical coupling plane. *See:* **coupling plane**.

5. Safety—ESD test operator cautions

The ESD simulator is a high-voltage instrument. Some are capable of producing voltage levels up to 25 kV. Although the energy level of a single discharge at this voltage is below that which is considered lethal for a normal, healthy adult, this energy level can give the user an unpleasant shock. Therefore, there is an inherent danger when performing ESD tests.

Operating and working around any high-voltage instrument or device requires a high degree of responsibility, care, and common sense. Normal high-voltage safety practices should be exercised when performing these tests. The ESD simulator manufacturer's safety practices should also be followed.

CAUTION

ESD testing may be hazardous to wearers of electronic life-support equipment. Personnel with pacemakers, heart problems, nervous disorders, and similar problems should not be allowed to operate the ESD simulator or be present during ESD testing.

6. Laboratory test conditions

The intent of ESD testing in the laboratory is to simulate both the level and type of ESD occurrences that are experienced by the product in the field in a manner that is representative of, but not necessarily identical to, actual ESD.

In order to minimize the effect of environmental parameters on the test results, ESD testing should be carried out under the conditions defined in this clause.

Copyright The Institute of Electrical and Electronics Engineers, Inc.
Provided by IHS under license with IEEE
No reproduction or networking permitted without license from IHS Not for Resale

6.1 Climatic conditions

ESD testing should be performed under the following climatic conditions:

a) Temperature: 15–27 °C (59–80 °F)
b) Relative humidity (RH): < 50%
c) Atmospheric pressure: 68–106 kPa

NOTES

1—Standard conditions are defined as sea level (101.3 kPa and 15 °C). Then 106 kPa is -383 m and 68 kPa is +3236 m altitude. International conversion for 1 kPa is 0.145 lbf/in^2 or 0.2953 inHg (typical reported atmospheric pressure measurement in the USA) and 10 mbar.
2—Tests can be performed outside the recommended climatic conditions. However, the results may be significantly affected with increased RH and variations in temperature.

The actual environmental conditions existing during the test should be recorded on the data sheet.

6.2 Air breakdown voltage test value

Air breakdown at a fixed distance between arcing electrodes is approximately proportional to atmospheric pressure and inversely proportional to absolute (K) temperature. Therefore, when testing EUTs for air breakdown (external or internal with either test method), the ESD test voltage level should be changed to reflect the test equipment specification and the environmental test conditions. Typically, air breakdown at sea level will be about 40% higher than at 3000 m. Failure to change the test voltage to account for pressure variation will create site-to-site immunity variations in the EUT air breakdown values.

6.3 Electromagnetic conditions

The ambient electromagnetic conditions should be such as not to influence the results of this test.

6.4 Test site description

6.4.1 General

Care should be exercised when selecting a site to perform ESD testing. The ESD impulse produces a broad spectral distribution of energy, and these emissions may cause damage or malfunction of unprotected equipment in the immediate area. Also, other equipment and activity in the immediate area can interfere with the ESD test. The ESD test site, therefore, should be located in an area that is of sufficient size to minimize interference.

Accordingly, it is recommended that a clear-area radius of at least 1 m be provided around the EUT and to any other metallic structure, including walls, so as not to impact the ESD test. Where possible, the EUT should be placed in a dedicated room with electrical isolation from unrelated equipment. Shielded rooms are not recommended for use as ESD test sites because of the possibility of creating standing waves that may affect the test results.

6.4.2 Size of ground reference plane (GRP)

A GRP of sufficient size to provide a continuous reference for the EUT, ESD simulator, and operator should be provided as part of the test site. The GRP on the floor is extended beyond the edges of the EUT at least 0.5 m for equipment up to 1 m in height, as well as for a tabletop test. To capture all edge effects for equipment over 1 m in height, the GRP should extend beyond the EUT at least 50% of the height of the EUT. An optional insulator, not to exceed 5 mm in thickness, may be placed over the GRP. The GRP should

Copyright The Institute of Electrical and Electronics Engineers, Inc.
Provided by IHS under license with IEEE
No reproduction or networking permitted without license from IHS
Not for Resale

be connected to the protective grounding system. Local safety regulations should always be met. See 7.4.1 for EUT ground connections.

NOTE—The GRP is not used during verification of the hand/metal ESD waveform for a lumped-element or hand-held simulator. A GRP should be used for a distributed capacitance simulator.

7. Test methods

The recommendations of this guide are based on the premise that products will be evaluated for ESD performance utilizing test simulation equipment that complies with the requirements delineated herein.

Discharge phenomena considered essential to product ESD performance are as follows:

a) Discharges from human bodies through a metallic object (hand/metal)
b) Discharges from metallic furniture

These ESD tests may be performed using air or contact ESD simulators. Human/touch ESD, though frequently encountered in the actual environment, is not delineated in this guide. See annex E.

7.1 Test method guidance

Tests may be performed utilizing air or contact ESD simulations for ESD events from humans holding small metal objects (hand/metal ESD) or from furniture. Subclauses 7.1.1 and 7.1.2 provide information relative to the use of these simulations.

7.1.1 Guidance—Air or contact ESD methods

The particular test method (air or contact ESD simulation) selected as appropriate for EUT evaluation should be determined by first establishing an intended result for the information that will be gained from the ESD test. The user of this guide should review the advantages and disadvantages of each method, as described in annex D, prior to selecting which test method to use. Items a) through c) briefly overview the processes involved with the two approaches.

a) For EUTs with conductive surfaces, either the air or contact discharge method can be used for applying discharges.
b) For EUTs with insulating surfaces, the air discharge method, by its nature, is predominantly used (see 7.5.4.4). The contact discharge test method may be used, but it will be an indirect test.
c) When performing indirect ESD testing using coupling planes, either the air or contact test method may be used, but the contact discharge test method is preferred for reasons of repeatability.

7.1.2 Guidance—Hand/metal and furniture ESD simulations

ESD test evaluations of EUTs may be performed utilizing hand/metal or furniture simulations. The application of ESD from either simulation on the EUT is intended to be concentrated as follows:

a) In physical areas likely to be touched by humans for the hand/metal condition
b) In physical areas likely to be impacted by mobile furnishings

Either of these two simulations may additionally be applied to VCPs and HCPs for purposes of evaluating the EUT performance under the influence of indirect ESD.

These two simulation methods are not mutually exclusive, although in practice they could result in redundant testing in certain EUT areas. It is recommended, in 7.5.3, that furniture ESD simulations be applied to EUT areas that are contained below a boundary height of 1 m above the floor surface (for floor-

Copyright The Institute of Electrical and Electronics Engineers, Inc.
Provided by IHS under license with IEEE
No reproduction or networking permitted without license from IHS Not for Resale

standing EUTs) and to the HCP below a tabletop EUT (i.e., to simulate ESD impacts from desk chairs to desks or tables). In addition, furniture ESD simulation could be applied to VCPs to evaluate the effect of indirect ESD from structures that are immediately adjacent to the EUT.

It should be noted that hand/metal ESD events can also be encountered in the same EUT areas (or indirect planes) as those evaluated for furniture ESD. When reviewing this overlap of EUT test areas and test simulations, it should be considered that the ESD impulse currents from the furniture events are more severe than those caused by the hand/metal events [B13], [B14], [B19], [B20], [B25], [B26]. This higher degree of severity caused by the furniture simulation may be realized by comparing table 3 to table 2 for air discharge (see 9.3) and table 5 to table 4 for contact discharge (see 9.4). For EUT areas (or indirect planes) where furniture ESD is viewed as applicable, further performance of ESD tests for hand/metal simulation in these areas becomes redundant.

In conclusion, there is not a single test that can address adequately the hand/metal and furniture ESD phenomena [B15]. A single test based on a furniture simulation may overestimate the equipment immunity since furniture ESD can only occur at certain points of the EUT. Some areas of the EUT are only touchable by humans. Conversely, a single test based on hand/metal discharge may overestimate the equipment immunity if the coupling is due to magnetic fields [B22].

7.2 Performance of the ESD simulator

The ESD simulators (like those described in annex A), capable of generating the waveforms in figures 1 through 4, should meet these specifications at any specified repetition rate used for compliance testing. Waveform characteristics are described in tables 2 through 5 (see 9.3 and 9.4). The dimensions of the discharge tips are given in figure 5 for both air and contact simulators.

The ESD simulator characteristics are as follows:

a) Charging current (Ich): ≤ 3.5 mA (dc) at any charge voltage
b) Output voltage range: At least 1–6 kV for contact discharge; at least 2–15 kV for air discharge
c) Accuracy of output voltage: ± 5%
d) Polarity of the output voltage: see 7.3
e) Holding time: at least 5 s

7.3 Application of the discharges

Discharges should be applied to all selected test points with the equipment operating normally. These test methods may also be applied to EUTs in a nonoperational state (e.g., not connected to an ac power source) to check for destructive responses. Hand/metal and furniture direct discharges, as well as indirect discharges, should be applied where appropriate as determined by the particular EUT and test points selected (see 7.5.3).

Product response may be affected by the polarity of the discharge. Both polarities of discharge should be used during exploratory testing to determine their effect on the EUT.

7.4 Test setup

7.4.1 EUT configuration

The EUT should be configured in a manner representative of the equipment as typically used. A product that is marketed to be operated as a stand-alone device should be tested by itself. Conversely, a product designed and marketed to be operated as part of a multiunit system should be tested with peripherals, accessories, connecting cables, etc., attached and operating in a manner representative of actual use.

Copyright The Institute of Electrical and Electronics Engineers, Inc.
Provided by IHS under license with IEEE
No reproduction or networking permitted without license from IHS
Not for Resale

a) for discharge voltages less than 4 kV

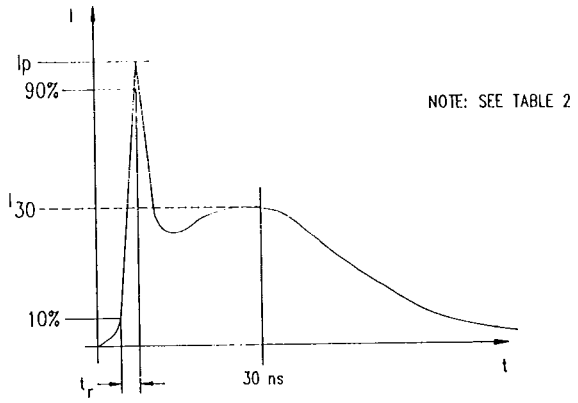

b) for discharge voltages from 4–10 kV

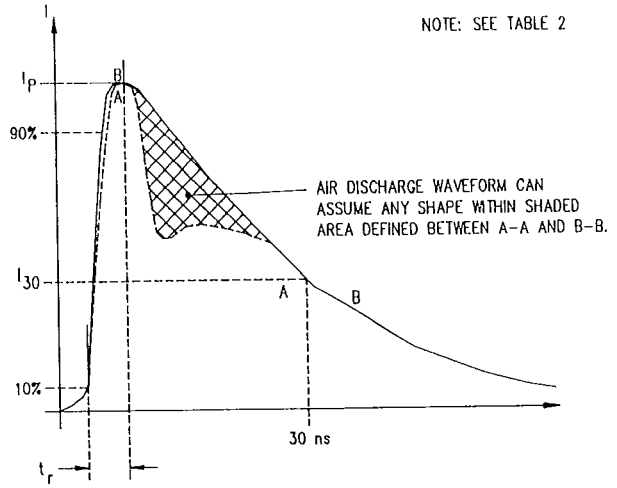

c) for discharge voltages above 10 kV

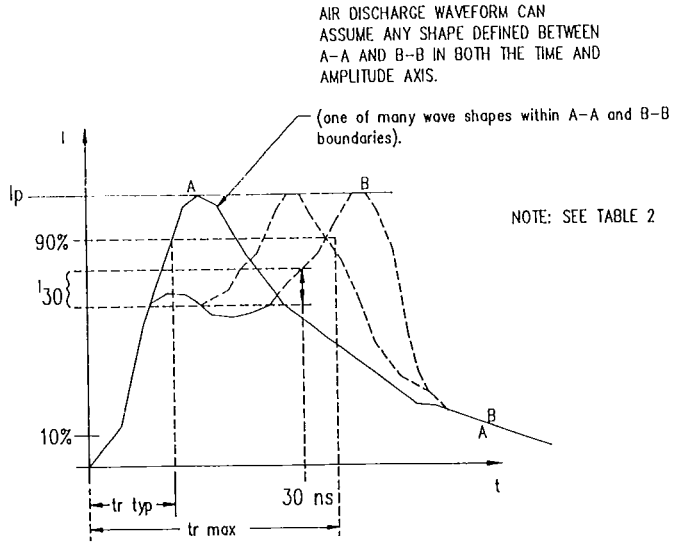

Figure 1—Simulator verification current waveform for hand/metal ESD (air)

Copyright The Institute of Electrical and Electronics Engineers, Inc.
Provided by IHS under license with IEEE
No reproduction or networking permitted without license from IHS

Not for Resale

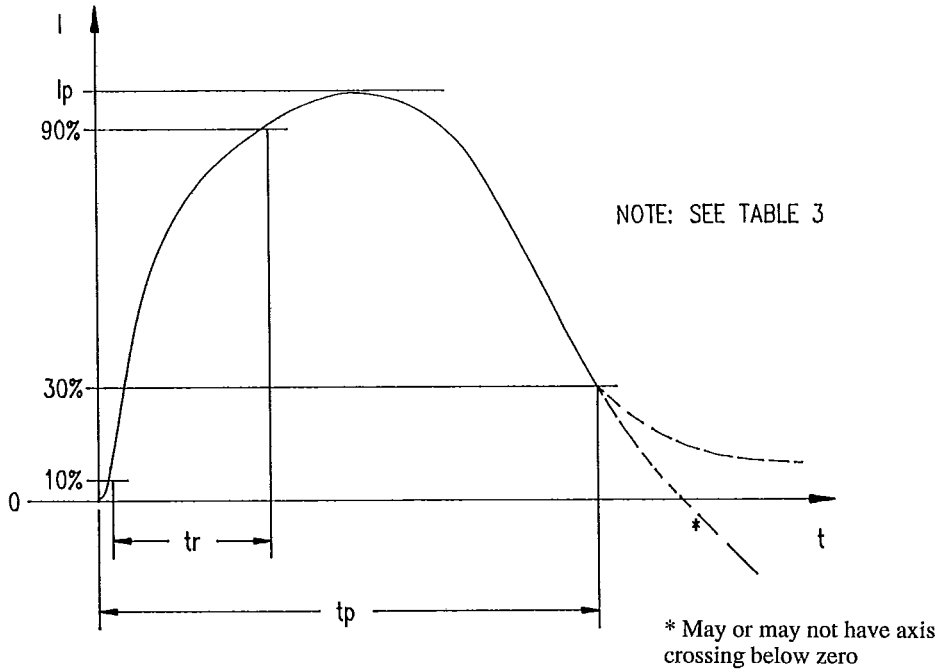

Figure 2—Simulator current waveform for furniture ESD (air)

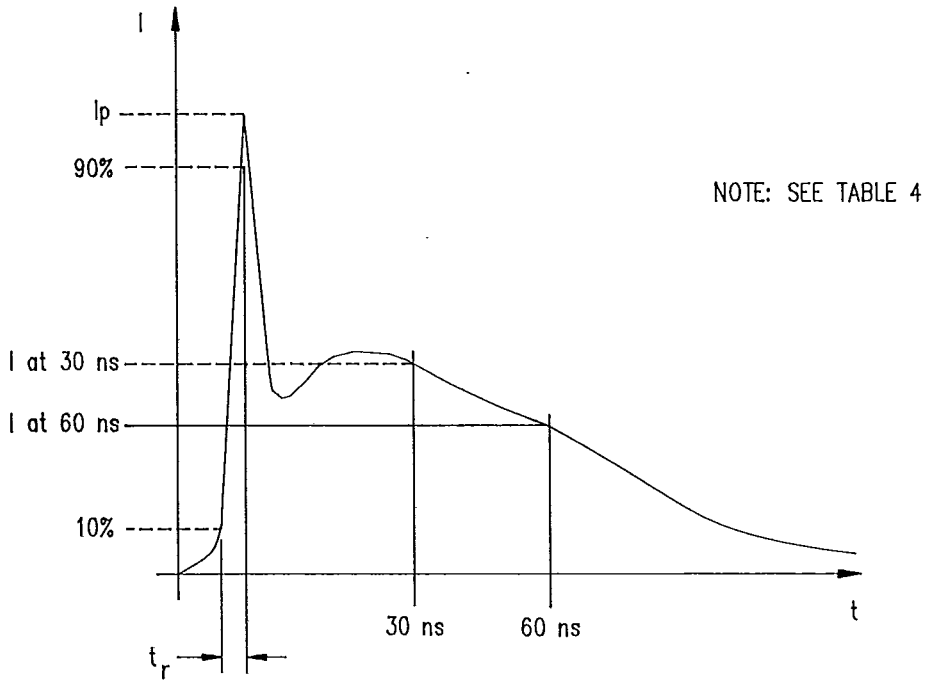

Figure 3—Simulator verification current waveform for hand/metal ESD (contact)

Copyright The Institute of Electrical and Electronics Engineers, Inc.
Provided by IHS under license with IEEE
No reproduction or networking permitted without license from IHS

Not for Resale

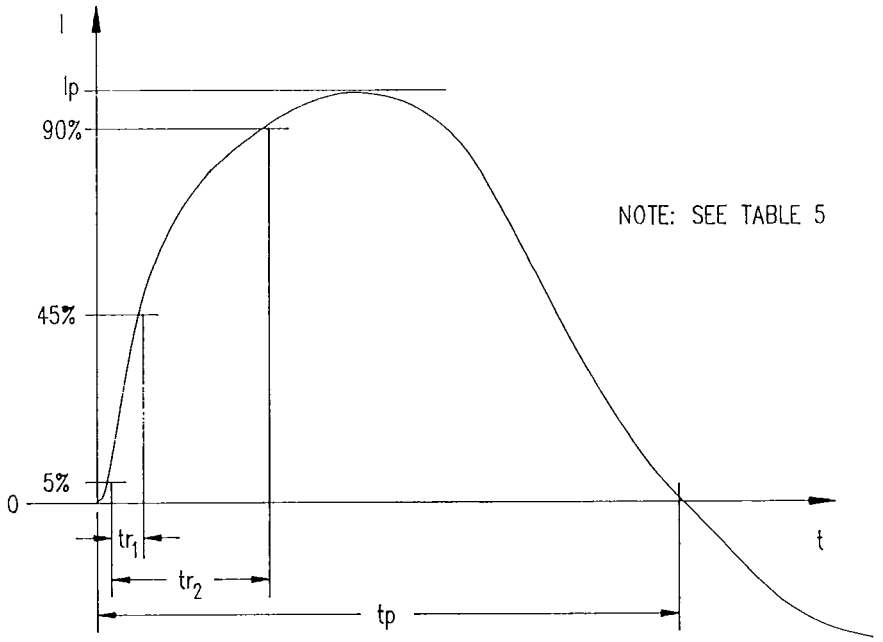

Figure 4—Simulator current waveform for furniture ESD (contact)

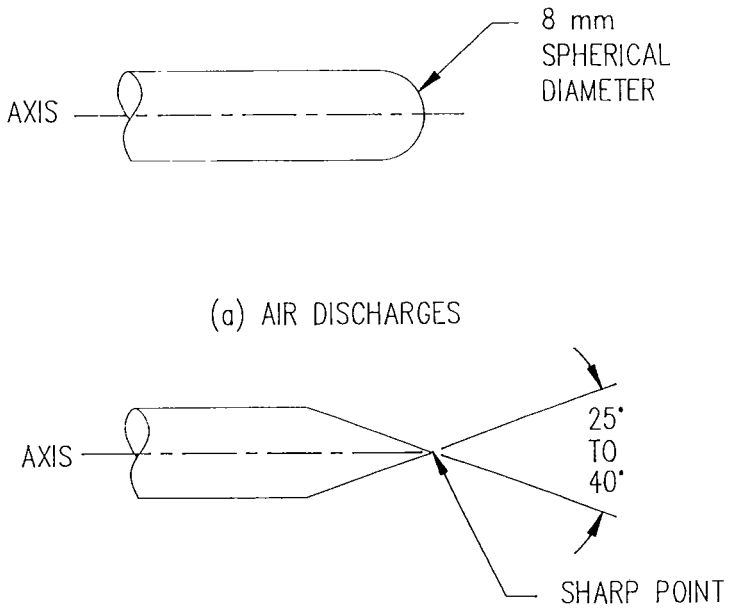

Figure 5—Discharge electrodes of the ESD simulator

Copyright The Institute of Electrical and Electronics Engineers, Inc.
Provided by IHS under license with IEEE
No reproduction or networking permitted without license from IHS

Not for Resale

Products may be tested when attached to an exerciser. In this case, the exerciser should be ESD hardened to facilitate a valid test. Because hardened exercisers are very difficult and expensive to obtain, a remotely located, unhardened exerciser may be used instead.

Ground connections other than those specified in the installation specifications should not be used during testing.

The EUT configuration, cables, modes of operation, and software used should be documented.

The disposition of the power and signal cables should be representative of typical installation practice. Less than maximum cable lengths are allowed. The cable lengths and layout used should be documented.

7.4.1.1 Tabletop equipment

The test setup uses a nonconductive table, 1.6 m by 0.8 m, and 0.8 m high, standing on the GRP. An HCP of the same size as the standard tabletop is placed on the tabletop.

The EUT and cables are isolated from the tabletop or coupling plane by an insulating support $\leq$ 0.5 mm in thickness, having a relative dielectric constant of 3 to 6. An example of the test setup for tabletop equipment is given in figure 6. See CISPR 24, IEC 801-2 (1991), and [B7].

If the EUT is too large to be located 0.1 m minimum from all sides of the HCP, an additional, identical HCP at the same height above the GRP is used, placed 0.3 m from the first, with the short sides adjacent. The HCPs are not bonded together other than via the resistive straps to the GRP in order to maximize the potential difference between them.

Any mounting feet associated with the EUT should remain in place.

7.4.1.2 Floor-standing equipment

The EUT is isolated from the GRP by an insulator not to exceed 5 mm in thickness. Any mounting feet associated with the EUT should remain in place. Refer to figure 7 for a typical setup.

7.4.2 Simulator return cable

The discharge return cable required in air and contact hand/metal simulators and certain types of air discharge furniture simulators (see annex A) is connected to the GRP as shown in figures 6 and 7. A cable longer than 2 m may be necessary to apply discharges to selected points. When testing such points while using a longer cable, the excess length over 2 m should be bundled noninductively off the GRP to avoid additional loops in the test circuit. For all discharge return cable lengths used, the simulator should meet the requirements of clause 9.

The connection of the simulator return cable to the GRP and all bonding should be of low impedance at high frequencies. The discharge return cable of the simulator (if required) should be positioned at least 0.2 m from the EUT while the discharge is being applied. This measure is needed to prevent radiation from this cable from affecting the test results. The end of the discharge return cable connected to the simulator may be closer to the EUT.

7.4.3 Distributed capacitance simulators

Crossed-vane or distributed capacitance simulators are normally used as furniture ESD simulators both for direct and indirect ESD testing. There should be a continuous GRP under the EUT and the distributed capacitance simulator for all ESD testing, direct or indirect, to ensure test stability.

Copyright The Institute of Electrical and Electronics Engineers, Inc.
Provided by IHS under license with IEEE
No reproduction or networking permitted without license from IHS
Not for Resale

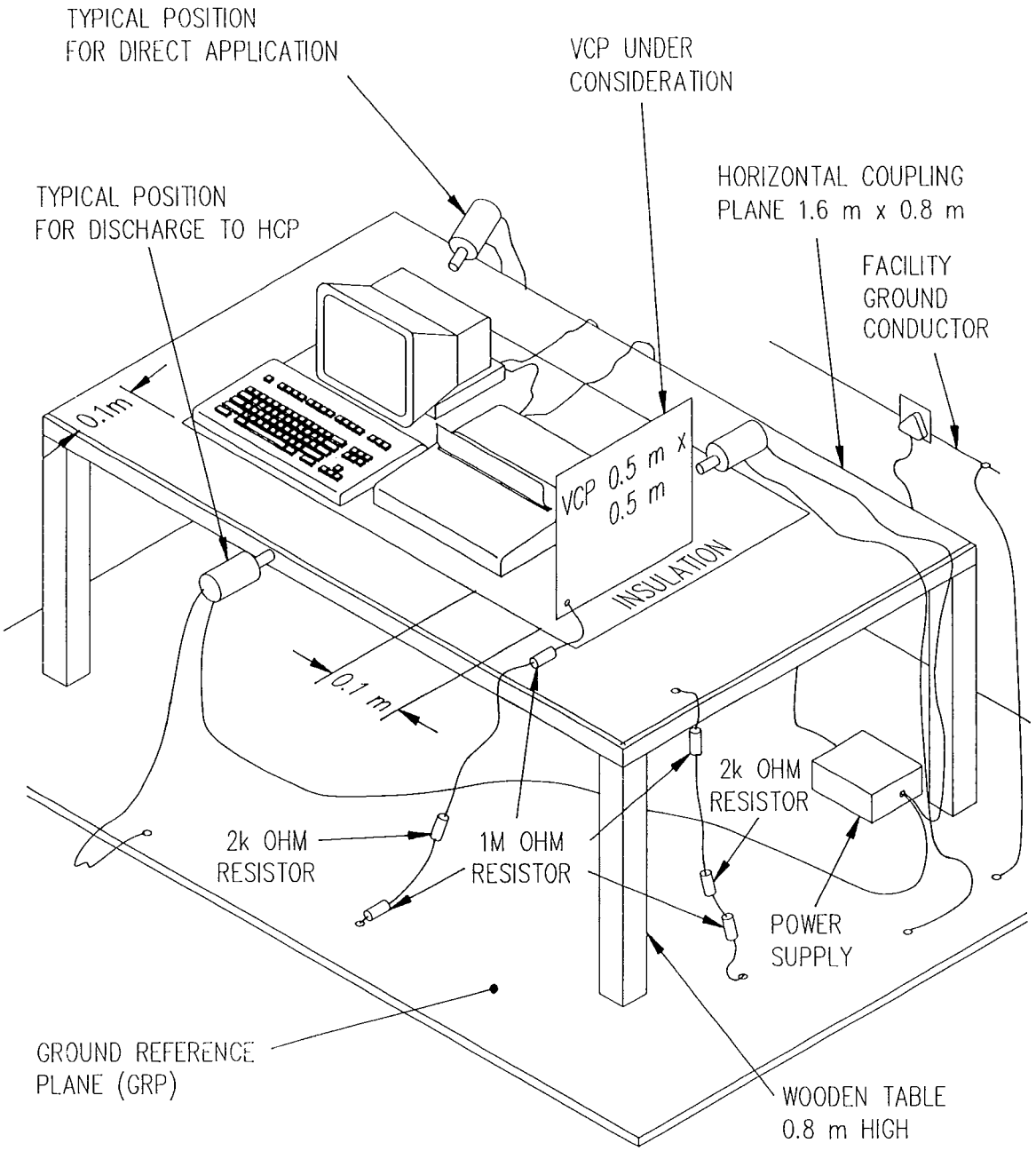

Figure 6—Test setup for tabletop equipment—Laboratory tests

Copyright The Institute of Electrical and Electronics Engineers, Inc.
Provided by IHS under license with IEEE
No reproduction or networking permitted without license from IHS

Not for Resale

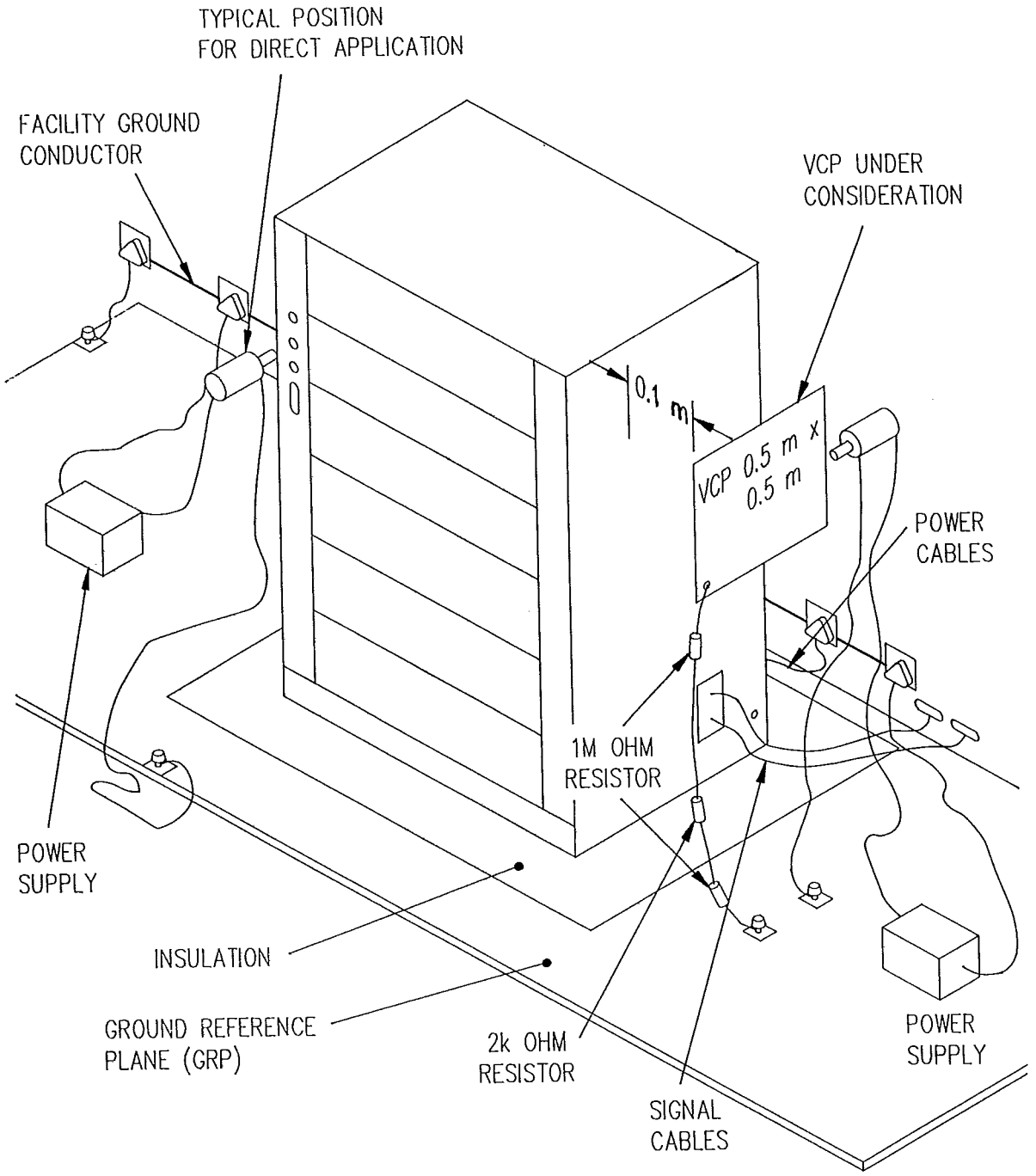

Figure 7—Test setup for floor-standing equipment—Laboratory tests

Copyright The Institute of Electrical and Electronics Engineers, Inc.
Provided by IHS under license with IEEE
No reproduction or networking permitted without license from IHS

Not for Resale

The distributed capacitance simulators are used with the following conditions:

a) For direct ESD testing to the EUT, there is no electrical connection (or cable) between the simulator and the GRP.
b) If the distributed capacitance simulator is used for indirect testing with a coupling plate (HCP or VCP), a bleed resistor as described in 7.5.5 should be used.
c) The distributed capacitance simulator can be used for indirect testing by discharging the vanes to the isolated metal base holding the vanes. The crossed-vane simulator base is capacitively coupled to the GRP. A bleed resistor to the GRP is not required.
d) Verification of the current waveform from a distributed capacitance simulator requires a bleed path between the target plane and the GRP. The setup for this verification is shown in figure 8 and described in clause 9.

NOTE—Do not use a contact-distributed capacitance simulator as an air discharge simulator unless permitted by the manufacturer. Details of a contact-distributed capacitance simulator are given in annex A.

7.4.4 VCPs/HCPs

The VCP (see annex G) and the HCP are connected to the GRP via a strap with a 1 MΩ ± 50% high-voltage resistor located at each end. A 2 kΩ low-voltage, low-wattage resistor is connected in series with the 1 MΩ resistor located near the GRP. See figures 6 and 7.

NOTE—The 1 MΩ resistor located at each end of the charge bleed strap shown in figures 6 and 7 should have a withstand voltage greater than 50% of the applied voltage. (The high-voltage resistor requirement is necessary to prevent breakdown creating false current loops. The 2 kΩ resistor prevents the stray capacitance of the high-voltage resistor from forming a ringing circuit.)

7.5 Laboratory test procedures

Tests performed in laboratories are the preferred method of demonstrating compliance with this guide. However, unique on-site tests are allowed under the limited conditions specified in 7.6.

Clause 8 discusses the significance of multitrial testing, number of trials, and repetition rate of the discharges [B2].

7.5.1 EUT software

Choose test software for the EUT that will exercise all modes of normal operation.

Where it is cost prohibitive to exercise all normal modes of operation because of the EUT complexity, exercise either of the following:

a) Many operating modes selected randomly
b) Specific modes expected or known to exhibit the most susceptibility, using good engineering judgment

As the complexity of the machine operating system decreases, the probability of evaluating all or most modes of operation increases.

7.5.2 Automatic retry

When testing a product/system that has automatic retry, or specified operator intervention retry, the ESD pulse repetition rate may be adjusted, so that after a product response has occurred, at least one ESD-free product/system retry operation is allowed before another discharge is applied. This measure is necessary to allow the EUT an opportunity to clear a recoverable response should one occur. If another ESD event is permitted prior to the retry operation, the EUT would be denied this opportunity and may instead log an error requiring operator attention. Permitting the EUT one error-free operation avoids this.

Copyright The Institute of Electrical and Electronics Engineers, Inc.
Provided by IHS under license with IEEE
No reproduction or networking permitted without license from IHS Not for Resale

When excessive retry times occur during execution of the test program (i.e., greater than 5% of the total time), that portion of the test program exhibiting this characteristic should be disabled after successful retry verification to allow the rest of the software and electronics to be exposed to ESD.

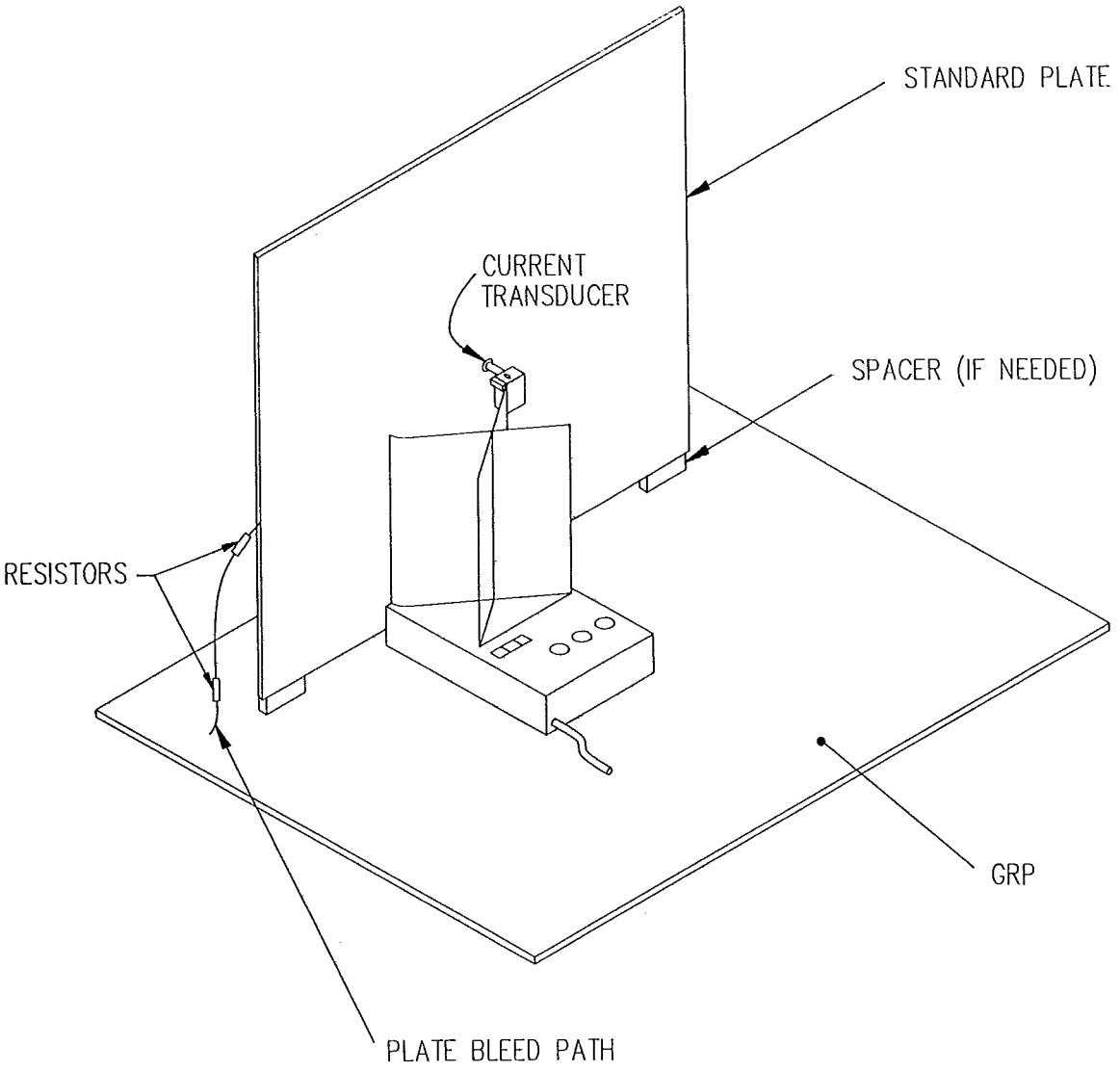

Figure 8—Typical arrangement for waveform verification of distributed capacitance ESD simulator

Copyright The Institute of Electrical and Electronics Engineers, Inc.
Provided by IHS under license with IEEE
No reproduction or networking permitted without license from IHS

Not for Resale

7.5.3 Selection of test points

The electrostatic discharges should be applied to the EUT at any operator-accessible points and, in the case of tabletop equipment, also to the edge of the HCP supporting the EUT and to the vertical edge of the VCP (see annex G).

The EUT test points to be considered should include the following locations as applicable:

a) Any point in the control or keyboard area and any other point of man-machine communication devices such as switches, knobs, buttons, and other operator-accessible areas, e.g., cable connectors
b) Exterior surfaces of the metallic cabinet whether grounded or electrically isolated from ground
c) Areas on insulated enclosures that are nearest to conductive portions of the enclosed circuitry
d) Other points that are likely to be touched by the human body or by furniture, especially near enclosure seams or apertures

The discharges should be applied to all equipment and peripherals that form the EUT system.

Discharges for furniture ESD should be limited to a range in height of 300–1000 mm. Ungrounded conductive surfaces should be tested for subsequent breakdowns at the desired test voltage.

The application of discharges to any point of the equipment that is accessible only during maintenance is not required unless agreed upon by the manufacturer and the user.

7.5.4 Direct application of discharge to the EUT

7.5.4.1 Test voltage steps

The test voltage should be increased from the minimum to the selected test severity level in order to determine any threshold of failure. The final severity level should not exceed the manufacturer's specified value or the required compliance level in order to avoid damage to the equipment.

The use of incrementally ascending levels is required to expose the product to the full range of waveform amplitudes. Some products have the tendency to exhibit susceptibility responses when exposed to specific ESD voltages, but not necessarily at other voltage levels [B12]. In the absence of other requirements, it is recommended to use 1 kV steps for contact and 2 kV steps for air discharge.

7.5.4.2 Time between ESD events

The time interval between successive single discharges should be as long as necessary to determine whether a system failure has occurred. An initial value greater than 100 ms is recommended. Higher repetition rates can be used (shorter time intervals) as long as the requirements of 7.5.2 are met.

Higher repetition rates are advantageous to those who want to perform multiple trial ESD testing in order to expedite the test time [B17].

7.5.4.3 Locations of ESD simulator

The ESD simulator is positioned so that the discharge tip is perpendicular to the EUT's surface for direct discharge, and parallel to the coupling plane (either HCP or VCP) for indirect discharge to the EUT. The discharge electrode should be discharged to the edge of the coupling plane in an indirect test.

7.5.4.4 Electrode connections for contact discharge method

In the case of direct contact discharges, the tip of the discharge electrode must touch a conducting point on the EUT before the discharge switch is actuated.

Copyright The Institute of Electrical and Electronics Engineers, Inc.
Provided by IHS under license with IEEE
No reproduction or networking permitted without license from IHS Not for Resale

Where painted surfaces cover a conducting substrate, the following procedure is used. If the coating is not declared to be an insulating coating by the equipment manufacturer, then the pointed tip of the simulator penetrates the coating so as to make contact with the conducting substrate. Coatings declared as insulating by the manufacturer should only be treated as such if the declared voltage withstand of the coating exceeds the voltage level for air discharges at the appropriate severity level. The direct contact discharge test method is not applied to insulating surfaces.

7.5.4.5 Speed of approach for air discharge method

The speed of approach of the discharge electrode is a critical factor in the rise time and amplitude of the injected current [B6]. The speed of approach should be between 0.1–0.5 m/s for any tabletop or floor-standing test. The simulator should not be stopped when the arc occurs, but rather should be followed through until the electrode touches the surface without causing mechanical damage [B20].

7.5.4.6 EUT charge buildup

If the EUT has conductive or nonconductive surfaces that acquire a charge, such surfaces must be discharged between successive ESD pulses. A ground strap containing a 1 MΩ resistor in series is recommended for discharging conductive surfaces.

7.5.5 Indirect application of the discharge

Discharges to objects placed or installed near the EUT are simulated by applying the discharges of the ESD simulator to a coupling plane (HCP or VCP) that is connected to the GRP via a strap with a 1 MΩ ± 50% high-voltage resistor located at each end. A 2 kΩ low-voltage, low-wattage resistor is connected in series with the 1 MΩ resistor located near the GRP. This prevents a charge buildup on the coupling plane.

NOTE—The 1 MΩ resistor located at each end of the charge bleed strap shown in figures 6 and 7 should have a withstand voltage greater than 50% of the applied voltage. (The high-voltage resistor requirement is necessary to prevent breakdown creating false current loops. The 2 kΩ resistor prevents the stray capacitance of the high-voltage resistor from forming a ringing circuit.)

The contact discharge mode is the preferred method for performing indirect ESD testing.

7.5.5.1 HCP under EUT (Tabletop test)

Discharges should be applied to the HCP at points on each side of the EUT. The ESD pulse should be applied to the center of the edges of the HCP (see figure 6).

7.5.5.2 VCP

The use of the VCP during ESD testing is presently under consideration. See annex G.

7.6 On-site test setup

These tests are not preferred and are not mandatory. They should be applied only when agreed to by the manufacturer and the customer. The results are only applicable to the unique installation tested.

NOTE—It should be considered that other collocated equipment may be adversely affected during these tests.

The equipment or system should be tested in the final installed condition. In order to facilitate a connection for the discharge return ground cable, a GRP should be placed on the floor of the installation close to the EUT at about 0.1 m distance. The GRP should satisfy the requirements of 6.4.2. Where this is not possible because of insufficient space, a smaller plane may be used.

Copyright The Institute of Electrical and Electronics Engineers, Inc.
Provided by IHS under license with IEEE
No reproduction or networking permitted without license from IHS
Not for Resale

The GRP should be connected to the facility ground. Where this is not possible, the GRP should be connected to the ground terminal of the EUT.

The discharge return cable of the ESD simulator should be connected to the GRP at a point close to the EUT. Where the EUT is installed on an ungrounded metal table, the table should be connected to the GRP via a strap with a 1 MΩ resistor located at each end, to prevent a buildup of charge. An example of the setup for on-site testing is shown in figure 9.

NOTE—The 1 MΩ resistor located at each end of the charge bleed strap shown in figures 6 and 7 should have a withstand voltage greater than 50% of the applied voltage. (The high-voltage resistor requirement is necessary to prevent breakdown creating false current loops. The 2 kΩ resistor prevents the stray capacitance of the high-voltage resistor from forming a ringing circuit.)

7.7 On-site test procedures

7.7.1 EUT software

See 7.5.1.

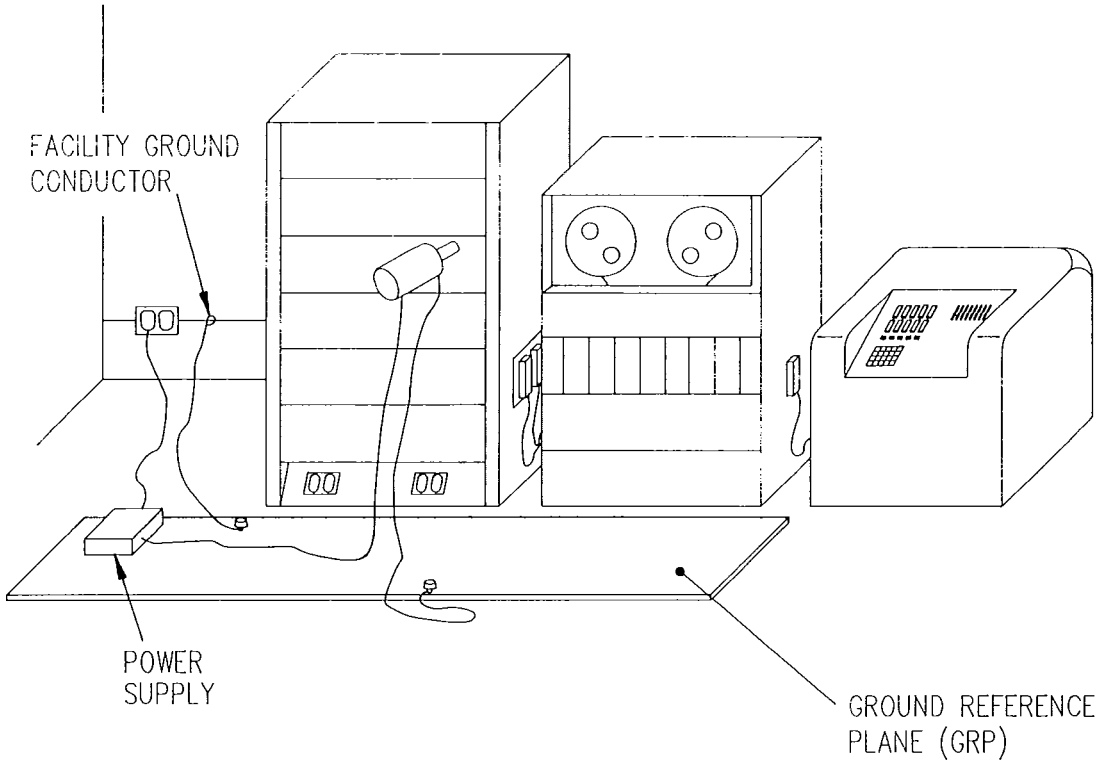

Figure 9—Example of test setup for equipment—Post-installation tests

Copyright The Institute of Electrical and Electronics Engineers, Inc.
Provided by IHS under license with IEEE
No reproduction or networking permitted without license from IHS
Not for Resale

7.7.2 Automatic retry

See 7.5.2.

7.7.3 Selection of test points

The electrostatic discharges should be applied to the EUT on preselected points agreed to by the manufacturer and the customer.

7.7.4 Direct application of discharges to the EUT

See 7.5.4.

7.7.5 Indirect application of the discharge

Discharges to objects placed or installed near the EUT should be simulated by applying the discharges of the ESD simulator to the HCP (see 7.5.5.1) and the VCP (see annex G).

8. Establishing ESD test criteria

8.1 Basis for establishing an ESD test criteria

It is not possible to accurately assess the behavior of a product in its intended environment based on an arbitrarily defined number of simulated discharges using a randomly chosen pass/fail criteria [B1].

ESD testing is a statistical sampling process, and thus it is not possible to be 100% confident of the test results. Consider the situation where a product is tested by injecting 100 simulated discharges, and one undesired response occurred. If another 100 simulated discharges were performed, there is a high probability that some other number of undesired responses (like 0, 2, 3, etc.) will occur. This type of product behavior is typical of systems having time windows during which product ESD immunity is low [B18]. The probability of applying a simulated discharge during these time windows cannot be increased by using larger energy levels. Therefore, a number of simulated discharges should be applied to each test point for a sufficiently long period of time to detect time window effects.

Because the average ESD occurrence rate increases dramatically at lower energy levels, susceptible time windows have the potential of degrading product ESD immunity even if their duration is small.

If an accurate estimation of the product's Mean Time Between Undesired Response (MTBUR) is also required, the test method should include the expected distribution of actual ESD events at various energy levels that will occur in the product's environment.

8.2 ESD responses

The following are some typical types of ESD responses:

a) *Automatically recoverable.* EUT automatically recovers in an acceptable length of time, e.g., disc drive read-retries.
b) *Recoverable.* Operator intervention of a minor nature is required, e.g., backspace on a keyboard to correct a false character.
c) *Non-recoverable.* Easy recovery is not possible. Major operator intervention is required, e.g., program reinitialization.

Copyright The Institute of Electrical and Electronics Engineers, Inc.
Provided by IHS under license with IEEE
No reproduction or networking permitted without license from IHS
Not for Resale

d) *Destructive*. Damage to components. The equipment must be repaired to restore operation, e.g., destruction of an integrated circuit.

Determination of which ESD responses constitute undesired responses, as well as how they are treated, is dependent on the product's intended application and operating environment.

8.3 A three-phase process to establishing an ESD test criteria

Figure 10 depicts a three-phase process that can be used to establish an ESD test criteria.

8.3.1 Phase 1: Definition

In this phase, the EUT test criteria and operating environment are defined. These include the EUT's operating environment (controlled or uncontrolled), type of ESD test to be performed (hand/metal or furniture), test method (direct or indirect, air or contact), undesirable responses, and desired range of ESD test voltages.

8.3.2 Phase 2: Search trials

In this phase, a series of search trials is performed to determine the basic ESD responses of the EUT. These trials should determine discharge polarity sensitivity, sensitive test points as pointed out in 7.5.3, and time window effects [B22]. The EUT undesired response rate (percent of simulated discharges that result in an undesirable response) will begin to be determined.

The ESD search trial tests should follow the voltage levels recommended in 7.5.4.1. Voltages up to the maximum test voltage should be used. The discharges should not be synchronized to EUT operation (i.e., care should be taken not to synchronize the discharges so time sensitive windows are not accentuated).

If the EUT undesired response rate is not acceptable, the EUT should be redesigned and the search trials should be repeated.

8.3.3 Phase 3: Final verification test

Perform a final verification test, using the results of Phase 2 along with the expected distribution of ESD events, to determine with a known level of confidence how the EUT will behave in its intended operating environment. Note that ESD testing is based on the requirement that as a series of simulated discharges is applied to an EUT, an ESD response is assumed to occur with equal probability after each discharge. For this reason the injection rate should be slow enough to avoid accumulation effects (see 7.5.2).

Two alternative methods of performing a final verification test are as follows:

a) *Method A*. Will determine if the EUT meets a predefined MTBUR. The number of simulated discharges at each test voltage and test point is adjusted to reflect the distribution of actual ESD events that occur in the EUT's intended environment (e.g., the number of simulated discharges at lower test voltages is greater than the number at higher test voltages). No undesired EUT responses are allowed in this method through all ESD tests [B8].

b) *Method B*. Will determine an estimated value for the MTBUR when the EUT experiences undesired responses. The EUT's undesired response rate is multiplied by the expected distribution of actual ESD events at each test voltage [B21].

Examples of the two methods are given in annex C.

Copyright The Institute of Electrical and Electronics Engineers, Inc.
Provided by IHS under license with IEEE
No reproduction or networking permitted without license from IHS Not for Resale

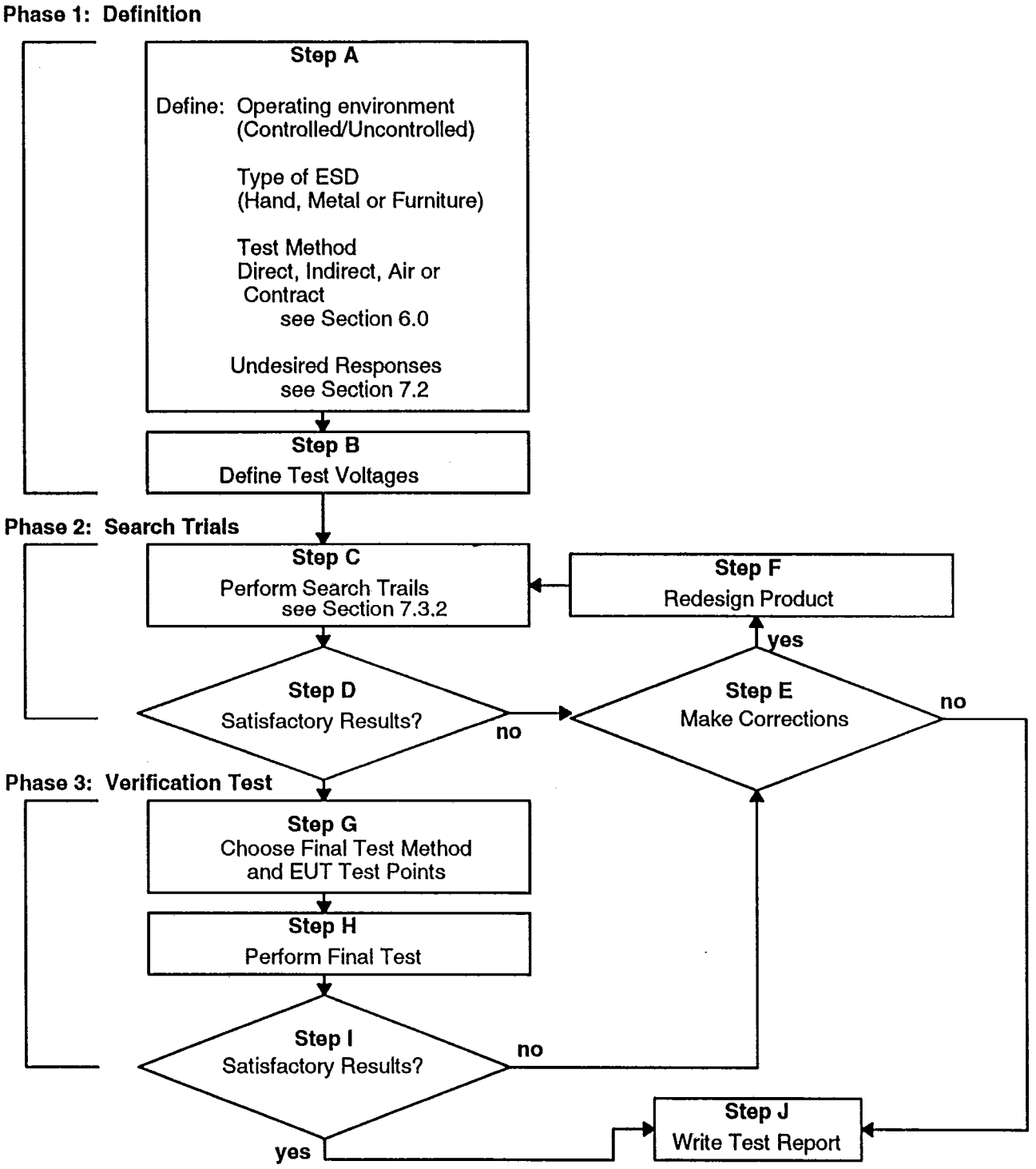

Figure 10—Establishing an ESD test criteria

Copyright The Institute of Electrical and Electronics Engineers, Inc.
Provided by IHS under license with IEEE
No reproduction or networking permitted without license from IHS
Not for Resale

8.3.3.1 Final verification test method A

The following test method should be used to determine if the EUT meets a predefined MTBUR:

Step Procedure

1. Select a desired MTBUR.

2. Define the test voltages, *V1* through *VL*, where *V1* is the lowest test voltage, and *VL* is the highest test voltage. *L* is the total number of test levels. See annex C for further information on choosing *V1*, *VL*, and *L*.

3. Define the expected number of ESD events per hour, *Ei*, that can occur in the EUT's intended environment at the selected test voltages, *Vi* (*i*=1, 2,...*L*). As a default value, set *Ei* equal to the expected number of ESD events per hour that occur between the test voltage, *Vi*, and the next lower test voltage, *Vi*-1 (see table C2).

4. Define the expected number of ESD events per hour, *Emax*, that occur at or above the maximum test voltage, *VL* (see table C2).

5. Select a confidence level appropriate for the intended application. As a default, use 95% ($C = 0.95$).

6. Compute the statistical test factor, *T*, from the desired test confidence level, *C*.

$$T = ln[1/(1-C)] \quad (1)$$

7. Compute the total number of simulated discharges, *Ntot*, using the following formulas:

$$fi = Sqrt\ [Ei] \quad (2)$$

$$F = \sum fi\ (i=1, 2,...L) \quad (3)$$

$$Ntot = [T \cdot F^2]/[1/\text{MTBUR} - Emax] \quad (4)$$

8. Divide *Ntot* among the test voltages *Vi* (*i*=1, 2,...*L*) using the following stratification scheme:

$$Ni = [fi \cdot Ntot]/F \quad (5)$$

To maintain mathematical validity of this method, *Ni* should be greater than 20.

9. Divide the number of simulated discharges at each test voltage, *Ni*, among the test points using the following stratification scheme:

$$Ntp = Rtp \cdot Ni \quad (6)$$

where *Rtp* is the relative probability that the physical location of the test point will be subjected to ESD (in actual use) as compared to the other test point locations.

The sum of all *Rtp* factors must equal one. As a default, the *Rtp* factors can be made equal for all test points, in which case it is simply the reciprocal of the number of tests points, *Rtp* = 1/(number of test points). The number of tests points includes the indirect test points (to HCP and VCP) as well as the direct test points. An excessive number of tests points is not recommended.

10. Induce the simulated discharges into the EUT. If there are no undesired responses, then with confidence level, *C*, the MTBUR of the EUT will be at least as good as the MTBUR specified in step 1 above.

Copyright The Institute of Electrical and Electronics Engineers, Inc.
Provided by IHS under license with IEEE
No reproduction or networking permitted without license from IHS
Not for Resale

8.3.3.2 Final verification test method B

The following procedure outlines the steps required to find the MTBUR of the EUT [B21].

Step Procedure

1. Define the test voltage steps, *V1* through *VL*, where *V1* is lowest test voltage, and *VL* is the highest test voltage. *L* is the total number of test levels. See annex C for information on choosing *V1*, *VL*, and *L*.

2. Define the expected number of ESD events per hour, *Ei*, that can occur in the EUT's intended environment at the desired test voltages, *Vi* (*i*=1, 2,...*L*). As a default value, set *Ei* equal to the expected number of ESD events per hour that occur between the test voltage, *Vi*, and the next lower test voltage, *Vi*-1 (see table C2).

3. Define the expected number of ESD events per hour, *Emax*, that occur at or above the maximum test voltage, *VL* (see table C2).

4. Select a confidence level appropriate for the intended application. As a default, use 95% ($C = 0.95$).

5. Select a number of simulated discharges, *Ni*, for each test voltage, *Vi*. The maximum MTBUR that can be validated for a given total number of simulated discharges is obtained by calculating the *Ni* using equation (4) [B21]. (See the example in annex C for an alternate method of selecting the appropriate *Ni*.)

6. Compute the number of simulated discharges at each test point, $Ntp = Rtp \cdot Ni$. See the comments in 8.3.3.1, step 9 for additional details.

7. Induce the *Ni* simulated discharges into the EUT. Record the total number of undesired responses, *URi*, for each test voltage, *Vi*.

8. Compute the measured undesired response rate using the following formula:

$$MURi = URi/Ni \tag{7}$$

9. Compute an estimated upper limit, *ULi*, for the EUT undesired response rate.

   If the EUT exhibits no undesired responses during the *Ni* simulated discharges, or $MURi = 0$, then:

$$ULi = 1/[2\,(Ni+1)] + Z\,\mathrm{Sqrt}\,[Ni/(Ni+1)^{3}] \tag{8}$$

   where *Z* is the confidence interval.

   If the EUT exhibits undesired responses, or MUR is not equal to zero, then:

$$ULi = MURi - 1/2Ni + Z\,\mathrm{Sqrt}[MURi(1-MURi)/Ni] \tag{9}$$

   where *Z* for different *C* are given in table 1.

10. Compute the number of expected undesired responses per hour due to actual ESD events,

$$EURi = (ULi) \cdot (Ei) \tag{10}$$

11. Add *Emax* to the sum of individual *EURi*, and then take the inverse to get the expected MTBUR of the EUT.

$$\mathrm{MTBUR} = 1/(Emax + \sum URi) \tag{11}$$

Copyright The Institute of Electrical and Electronics Engineers, Inc.
Provided by IHS under license with IEEE
No reproduction or networking permitted without license from IHS
Not for Resale

Table 1—Confidence interval, *Z*, as a function of confidence factor, *C*

C	0.6	0.7	0.8	0.9	0.95	0.975	0.99	0.995	0.999
Z	0.842	1.036	1.282	1.645	1.96	2.24	2.576	2.807	3.291

8.4 Test data records

The following information is suggested to be appropriate for documentation of the ESD tests outlined in this guide and in [B10].

8.4.1 Product information

In order to ensure repeatable test results, the user is urged to thoroughly record details of the configuration of the product under evaluation.

This record should include the following:

a) Product revision level
b) Details of product operation including programs used
c) Diagrams and/or photographs illustrating the discharge points
d) Diagrams and/or photographs of the arrangement of the product and interconnected units
e) Description of the types and characteristics of interface cables chosen

The product configuration data should be adequate so that another person could duplicate the test without having observed the original process.

8.4.2 Environmental data

As a control measure, test personnel should record the test site ambient temperature, relative humidity, and date on each test data sheet (see 6.1 and 6.2).

8.4.3 Simulator description

A brief description of the ESD simulator should be included in the test record. The description should include the type, manufacturer serial number, and any other pertinent information necessary to duplicate the test. The position of the simulator discharge return cable should also be documented.

8.4.4 Product response data

It is recommended that the response of the product at each test level, condition, and position be fully documented. Test conditions include identification of air or contact discharge, hand/metal or furniture ESD, voltage levels, polarities, and discharge rates. Error rates are valuable diagnostic information for later use. Often it is possible to reduce the error rate of a product's ESD response without significantly altering the actual threshold at which the response occurs. Reducing the error rate significantly will improve both the performance of the product and the end-user's perception of its quality.

9. Verification of ESD simulator performance

Correlation of the results of an ESD evaluation is extremely important. This is particularly so when tests are to be conducted using ESD simulators of different manufacture, or when testing is expected to extend over a long period of time. It is essential that repeatability be a driving factor in the evaluation. This makes it necessary to verify that an ESD simulator is performing according to the requirements set forth in this guide.

Copyright The Institute of Electrical and Electronics Engineers, Inc.
Provided by IHS under license with IEEE
No reproduction or networking permitted without license from IHS

Not for Resale

The shape of the current pulse is most significant to the validity of testing. The actual discharge pulse shape is affected by EUT parameters such as impedance and physical dimensions. The pulse shapes specified in figures 1 through 4 are related to discharges into a transducer located in the center of a vertical metal sheet of sufficient dimensions.

The following subclauses describe a method for verifying ESD simulator performance.

9.1 Test equipment

The following table lists the test equipment required to verify proper simulator performance.

Oscilloscope	Bandwidth: 1.0 GHz Write capability: ≤ 200 ps/division Input impedance: < 50 Ω Shielded enclosure (Faraday cage) around the oscilloscope is usually required
Attenuator	× 10 (or as necessary for vertical amplifier used), dc to 3 GHz, 10 W average
Coaxial target	IEC Type* (Resistive Load, figure 11) or Current Transformer (CT-1™†, figure 12). Refer to annex B for target construction details
High-voltage meter	Capable of measuring voltages of at least 15 kV, with an input impedance of 25 GΩ or greater

* The IEC target can be used for either air or contact discharge. The CT-1™ is recommended for use for contact discharge only.

† CT-1 is a registered trademark of the Tektronix Company.

9.2 Verification tests

To ensure comparability of test results obtained from different ESD simulations, air discharge simulators must generate waveforms that meet the specifications in tables 2 and 3 and contact discharge simulators must generate waveforms that meet the specifications in tables 4 and 5 when tested as specified below. The following environmental data should be recorded:

a) Temperature
b) Relative humidity
c) Barometric pressure

These factors should be within the limits defined in clause 6 except for relative humidity. Relative humidity levels are defined in tables 2 and 3.

Verifications should be performed as needed or as recommended by the simulator manufacturer.

Prior to verifying the waveshape, the amplitude accuracy of the ESD simulator should be determined using the high-voltage meter. The accuracy of the display compared to the measured voltage should be ± 5%.

For pulse shape verification purposes, the simulator is discharged into a current transducer (current probe or resistor) located in the center of a vertical metal plate large enough to shift reflections from the edges in time so that they are not superimposed on specified sections of the pulse shape when displayed on an oscilloscope. Plate sizes of 1.22 m by 1.22 m (4 ft by 4 ft) or larger have been found to be adequate for this purpose. For hand-held simulators, the simulator ground return cable should be connected to the target mounting plate at either bottom corner (as shown in figure 11). For distributed capacitance simulators, the target plate (see figure 8) is isolated from the GRP directly holding the simulator. A high-impedance bleed path should be used for continuous discharges.

Copyright The Institute of Electrical and Electronics Engineers, Inc.
Provided by IHS under license with IEEE
No reproduction or networking permitted without license from IHS
Not for Resale

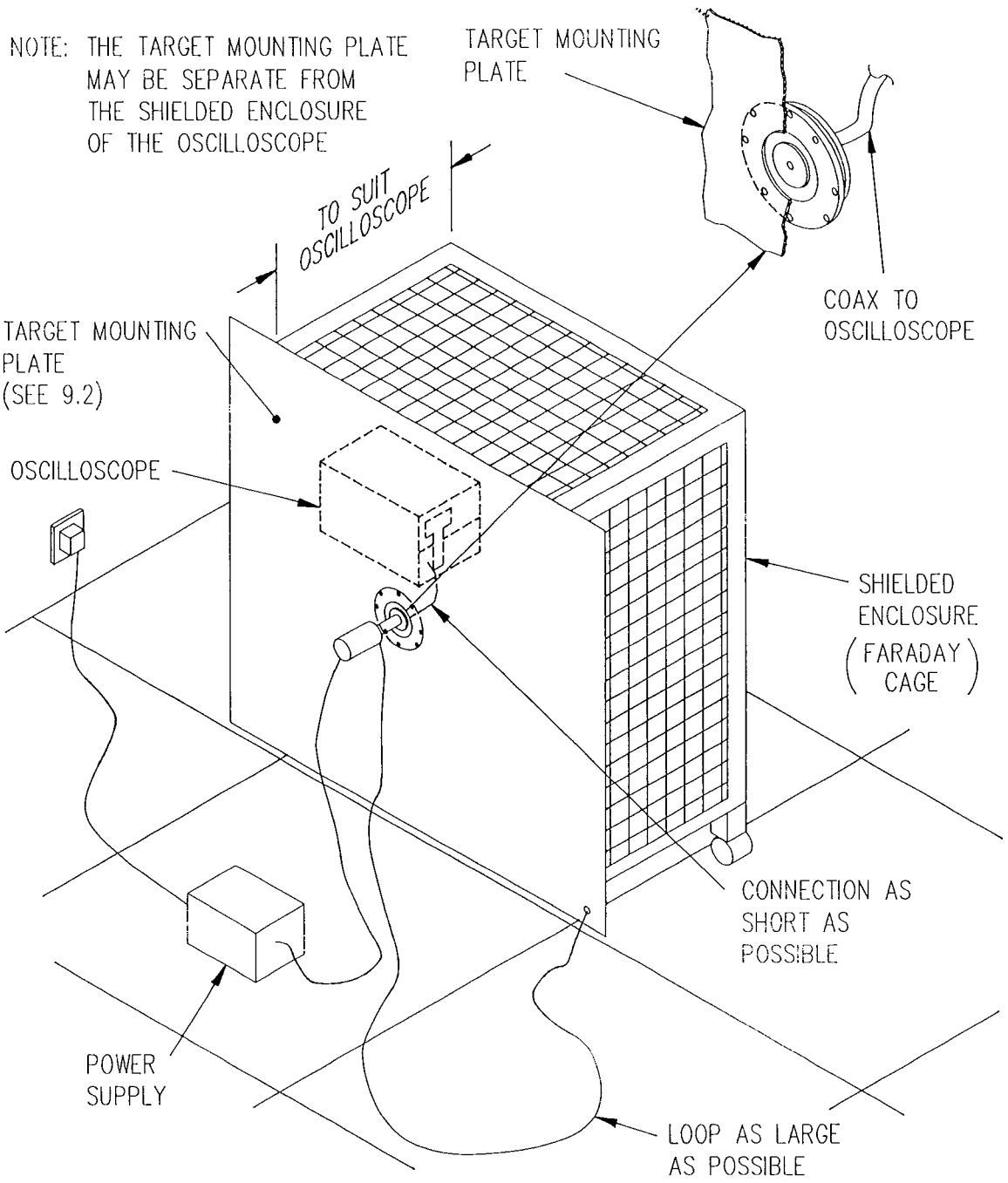

Figure 11—Typical arrangement for verification of ESD simulator performance

Copyright The Institute of Electrical and Electronics Engineers, Inc.
Provided by IHS under license with IEEE
No reproduction or networking permitted without license from IHS

Not for Resale

Table 2—Air discharge simulator verification parameters—Hand/metal

Indicated voltage (kV)	Ip ± 50% (peak current)	tr_{typ}* (rise time)	tr_{max}* (rise time)	I_{30} ± 50% at 30 ns
2	15 A	0.5 ns	1.0 ns	7 A
4	30 A	0.5 ns	1.0 ns	13 A
6	30 A	1.0 ns	2.0 ns	18 A
10	35 A	5.0 ns	30.0 ns	32 A
15	52 A	10.0 ns	35.0 ns	50 A
* Values measured with a 1 GHz oscilloscope at RH of 35 ± 5%				

Table 3—Air discharge simulator verification parameters—Furniture

Indicated voltage (kV)	Ip ± 50% (peak current)	tr* (10–90%) (rise time)	tp pulse width at 30% Ip
2	30 A	<1 ns	12–60 ns
4	50 A	<6 ns	12–60 ns
8	70 A	<10 ns	12–60 ns
10	80 A	<10 ns	12–60 ns
*Values measured with a 1 GHz oscilloscope at RH of 35 ± 5%			

The transducer should be set up to pick up the current right at the probe tip. All components must satisfy the bandwidth and current requirements implied by the pulse shape (1 MHz to 1.5 GHz). Coaxial design and common mode filtering are recommended. The mechanical transducer arrangement should be such that the probe capacitance to the metal plate is not affected.

The power main conducted current of the simulator should be less than 10% of the first peak current (Ip) given in tables 2 through 5. The current should be measured with a 100 MHz current probe around the ac power main cable to the simulator power supply. The usual way to measure the current is with a 150 MHz (or greater) storage oscilloscope.

9.3 Air discharge simulator verification—Performance measurement

Measurements of the ESD impulse waveform from the simulator are to be made by discharging the simulator under evaluation to the coaxial target (see figure 11) at the various ESD amplitudes specified.

Copyright The Institute of Electrical and Electronics Engineers, Inc.
Provided by IHS under license with IEEE
No reproduction or networking permitted without license from IHS

Not for Resale

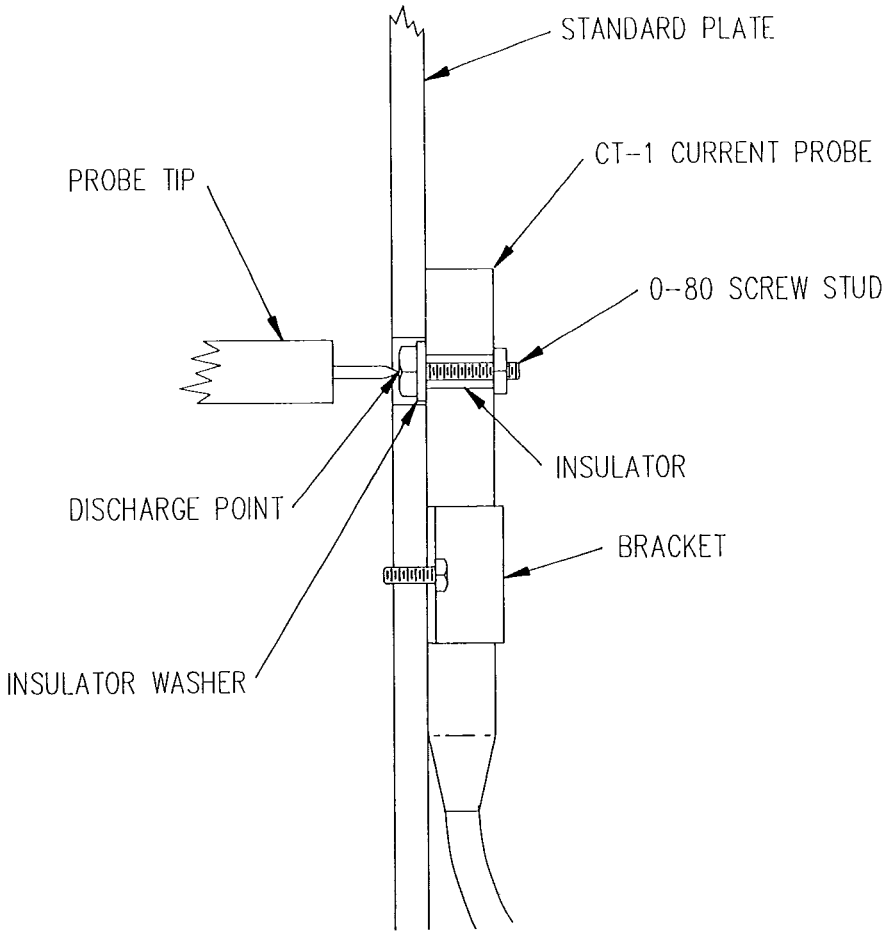

Figure 12—Using Tektronix CT-1™ as a direct contact calibration target

For the measurement setup given in figure 11, bring the energized discharge tip of the simulator up to the coaxial target until a discharge occurs or the target is touched. In the case of multiple discharges, only the first discharge should be considered. To ensure a representative distribution of waveforms, it may be necessary to take various waveform measurements with the simulator moved rapidly into the measurement load, and also moved slowly into the load. At approach speeds between 0.1–0.5 m/s, only the first discharge waveform should be recorded.

Verify that the waveshapes are correct for the parameters stated in tables 2 and 3 at an RH level of 35 ± 5% [B3], [B4], [B9], [B11], [B13], [B14].

Copyright The Institute of Electrical and Electronics Engineers, Inc.
Provided by IHS under license with IEEE
No reproduction or networking permitted without license from IHS

Not for Resale

9.4 Contact discharge simulator verification—Performance measurement

Measurements of the ESD impulse waveform from the simulator are to be made by discharging the simulator under evaluation to the coaxial target shown in figure 11 or the current transducer shown in figures 8 and 12 at the various ESD amplitudes specified.

For the measurement setups given in figures 8 and 11 bring the unenergized discharge tip of the simulator in contact with the target. The plate bleed path in figure 8 is like that described in 7.4.4. Discharge the simulator, maintaining contact between the tip and the target.

Verify that the waveshapes are correct for the parameters stated in tables 4 and 5 [B5].

9.4.1 Spurious current

Between the discharges depicted in figures 3 and 4, the maximum spurious current should not exceed 15% of the first peak value stated in tables 4 and 5.

Table 4—Contact discharge simulator verification parameters—Hand/metal

Indicated voltage (kV)	Ip ± 10% (peak current)	tr* (10–90%) (rise time)	Current ± 30% at 30 ns	Current ± 30% at 60 ns
2	12 A	<0.4 ns	6.5 A	3.0 A
4	24 A	<0.4 ns	13.0 A	6.0 A
6	36 A	<0.4 ns	19.0 A	9.0 A
*Values measured with a 1 GHz oscilloscope				

Table 5—Contact discharge simulator verification parameters—Furniture

Indicated voltage (kV)	Ip ± 10% (peak current)	tr* (5–45%) (rise time)	tr* (5–90%) (rise time)	Axis crossing tp
1	14 A	<0.7 ns	3–8 ns	11–15 ns
3	42 A	<0.7 ns	3–8 ns	11–15 ns
6	84 A	<0.7 ns	3–8 ns	11–15 ns
*Values measured with a 1 GHz oscilloscope				

Copyright The Institute of Electrical and Electronics Engineers, Inc.
Provided by IHS under license with IEEE
No reproduction or networking permitted without license from IHS
Not for Resale

10. Bibliography

[B1] Boxleitner, W., *Electrostatic Discharge and Electronic Equipment*. New York: IEEE Press, 1988.

[B2] Bush, Donald R., "Statistical considerations of electrostatic discharge evaluations," *7th EMC Symposium*, Zurich, Switzerland, pp. 487–490, Mar. 1987.

[B3] Byrne, William W., "Development of design and test procedures to meet electrostatic discharge (ESD)," *Proceedings of the 1982 MIDCON Convention*, Dallas, Tex., Session 28/4.

[B4] Byrne, William W., "The meaning of electrostatic discharge (ESD) in relation to human body characteristics and electronic equipment," *Proceedings of the 1983 IEEE International Symposium on EMC*, pp. 369–380.

[B5] Calcavecchio, Ralph J., and Pratt, Daniel J., "A standard test to determine the susceptibility of a machine to electrostatic discharge," *Proceedings of the 1986 IEEE International Symposium on EMC*, San Diego, Calif., pp. 475–482, Sept. 1986.

[B6] Daout, B., and Ryser, H., "The reproducibility of the rising slope in ESD testing," *Proceedings of the 1986 IEEE International Symposium on EMC*, San Diego, Calif., pp. 467–474, Sept. 1986.

[B7] ECMA TR/40, Electrostatic Discharge Immunity Testing of Information Technology Equipment, July 1987.

[B8] Gisin F., and Ritenour, T. J., "Performing statistical ESD tests using the ANSI C63.16-1991 guide for ESD test methodologies," *Proceedings of the 1992 IEEE International Symposium on EMC*, Anaheim, Calif., pp. 464–468, Aug. 17–21, 1992.

[B9] Hish, A.; Mellberg, H.; Nuebel, J.; and Sanesi, M.; "Recent developments in ESD waveform evaluation," *Proceedings of the 1991 EOS/ESD Symposium*, pp. 10–14.

[B10] ISO Guide 45, Guidelines for the Presentation of Test Results.

[B11] King, W. Michael, "Dynamic waveform characteristics of personnel electrostatic discharge," *Proceedings of the 1979 EOS/ESD Symposium*, pp. 78–87.

[B12] King, W. Michael, "Systems response to electrostatic discharge: Applications of impulse waveform research toward understanding product performance," *Proceedings of the 1987 EOS/ESD Symposium*, pp. 110–114.

[B13] King, W. Michael, and Reynolds, David, "Personnel electrostatic discharge: Impulse waveforms resulting from ESD of humans directly and through small hand-held metallic objects intervening in the discharge path," *Proceedings of the 1981 IEEE International Symposium on EMC*, pp. 577–590.

[B14] King, W. Michael, and Reynolds, David, "Personnel electrostatic discharge: Impulse waveforms resulting from ESD of humans through metallic-mobile furnishings intervening in the discharge path," *Proceedings of the 1982 IEEE International Symposium on EMC*, Santa Clara, Calif., pp. 212–219, Sept. 8–10, 1982.

[B15] Mardiguian, M., "ESD testing—The need for a dual personnel and material discharge simulation," *7th EMC Symposium*, Zurich, Switzerland, pp. 473–476, Mar. 1987.

[B16] Mass, J. S., and Pratt, D. J., "A study of the repeatability of electrostatic discharge simulators," *Proceedings of the 1990 IEEE International Symposium on EMC*, Washington, D. C., pp. 265–269, Aug. 1990.

Copyright The Institute of Electrical and Electronics Engineers, Inc.
Provided by IHS under license with IEEE
No reproduction or networking permitted without license from IHS Not for Resale

[B17] Pratt, Daniel J., "The discharge probe—Its role in the application of an ESD pulse," *7th EMC Symposium*, Zurich, Switzerland, pp. 477–480, Mar. 1987.

[B18] Pratt, Daniel J., and Davis, James H., "Electrostatic discharge (ESD) failure rate prediction," *Proceedings of the 1984 IEEE International Symposium on EMC*, Tokyo, Japan, pp. 468–473, Oct. 16–18, 1984.

[B19] Pratt, Daniel J.; Rhoades, William T.; and Staggs, David M.; "Comparative overview of proposed ANSI ESD guide, IEC and CISPR ESD standards," *Proceedings of the 1991 IEEE International Symposium on EMC*, pp. 337–342.

[B20] Pratt, Daniel J.; Rhoades, William T.; and Staggs, David M.; "Technical rationale behind the proposed ANSI electrostatic discharge guide," *7th International Conference on EMC*, York, England, pp. 10–15, Aug. 1990.

[B21] Renninger, Robert G., "Optimized statistical method for system-level ESD tests," *1992 IEEE International Symposium on EMC*, Anaheim, Calif., pp. 474–484, Aug. 17–21, 1992.

[B22] Rhoades, William T., "Interception and refinement of equipment ESD testing," *9th EMC Symposium*, Zurich, Switzerland, pp. 419–424, Mar. 1991.

[B23] Richman, P., "An ESD circuit model with initial spikes to duplicate discharges from hands with metal objects," *EMC Technology*, vol. 4, no. 2, pp. 53–59, Apr.–July 1985.

[B24] Ryser, H., "The relationship between ESD test voltage and personnel charge voltage," *Proceedings of the 1990 EOS/ESD Symposium*, EOS–12, EOS/ESD Association, Rome, N. Y., pp. 45–53.

[B25] Simonic, R., "Electrostatic furniture discharge event rates for metallic-covered, floor-standing information processing machines," *Proceedings of the 1982 IEEE International Symposium on EMC*, Santa Clara, Calif., pp. 191–198, Sept. 8–10, 1982.

[B26] Weil, Geoff, "Survey of furniture ESD," *9th EMC Symposium*, Zurich, Switzerland, pp. 413–418, Mar. 1991.

Copyright The Institute of Electrical and Electronics Engineers, Inc.
Provided by IHS under license with IEEE
No reproduction or networking permitted without license from IHS

Not for Resale

Annex A
ESD simulator characteristics and description

(informative)

A.1 Test simulator

A simplified diagram of the ESD simulator is shown in figure A1.

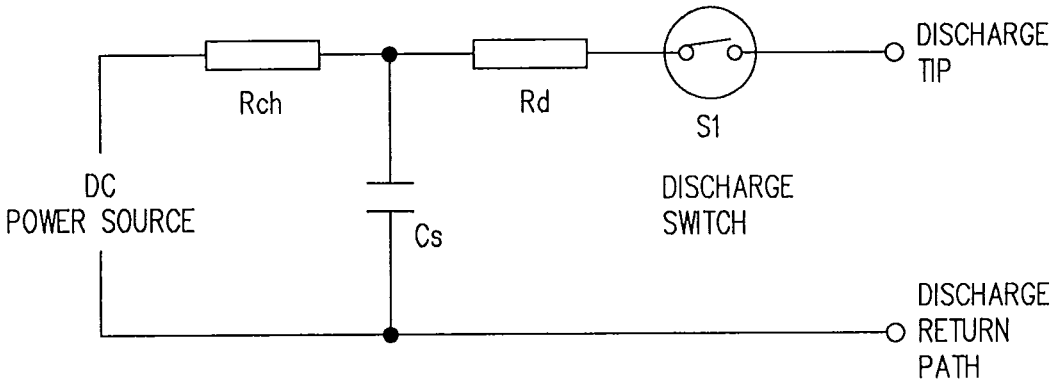

NOTES

1—Cs may include lumped, distributed, and stray capacitances depending on the particular ESD simulator construction.

2—For the air discharge method, S1 is not used.

3—Cd, omitted in the figure, is a distributed capacitance that exists between the simulator and the EUT, GRP, and coupling planes. Because the capacitance is distributed, it is not possible to show it in the figure.

Figure A1—Simplified diagram of the ESD simulator

Copyright The Institute of Electrical and Electronics Engineers, Inc.
Provided by IHS under license with IEEE
No reproduction or networking permitted without license from IHS Not for Resale

The test simulator consists, in its main parts, of the following:

a) Charging resistance, Rch
b) Energy-storage capacitance, Cs
c) Discharge resistance, Rd
d) Discharge switch, S1, for contact discharge simulator
e) Interchangeable discharge tips
f) Discharge return path
g) DC power source

Characteristics of the ESD simulator

The values listed below for Cs, Cd, Rd, and Rch are to be used only as a guide for obtaining the waveforms shown in figures 1 through 4. Exact values will depend on construction techniques employed in the manufacture of the simulator.

a) Energy storage capacitance (Cs): 150 pF
b) Discharge resistance (Rd): 330 Ω hand/metal simulation
    1) 15 Ω* contact discharge furniture simulation
    2) 75 Ω* air discharge furniture simulation
c) Charging resistance (Rch): 10–1000 MΩ
d) Output voltage minimum range: 1–6 kV for contact discharge, 2–15 kV for air discharge
e) Accuracy of output voltage: ± 5%
f) Polarity of the output voltage: see 7.2
g) Holding time: at least 5 s
h) Discharge modes of operation: single discharge or repetitive discharges
i) Waveshape of the discharge current: figures 1 and 3 for hand/metal ESD simulation and figures 2 and 4 for furniture ESD simulation to a calibrated target and special test setup. See clause 9 for simulator verification requirements.

*These resistance values were found to be acceptable in two different simulator designs. They cannot be directly compared.

The simulator should be provided with means for preventing unintended radiated or conducted emissions, either pulsed or continuous, other than those generated by the ESD event, so as not to disturb the EUT or make the test unrealistic. Information on conducted power main currents can be found in 9.2.1.

The energy-storage capacitance (if discrete), the discharge resistance, and the discharge switch should be placed as close as possible to the discharge electrode because the circuit wiring and construction techniques can affect the output waveforms. For the air discharge test method, the hand/metal contact discharge simulator may be used, but the discharge switch will be closed prior to the discharge.

The discharge return cable of an ESD simulator that employs discrete energy-storage capacitance will be approximately 2 m long and constructed to allow the simulator to meet the waveform specification. It should be sufficiently insulated to prevent the flow of the discharge current to personnel or conducting surfaces other than via its termination. In cases where a 2 m length of the discharge return cable is insufficient (e.g., for tall EUTs), a length not exceeding 3 m may be used, but compliance with the waveform specification should be verified.

Some ESD simulators depend on capacitive coupling to the GRP as the return current path (see 7.4.3). A discharge return cable should not be used for this type of ESD simulator [B5].

Copyright The Institute of Electrical and Electronics Engineers, Inc.
Provided by IHS under license with IEEE
No reproduction or networking permitted without license from IHS
Not for Resale

A.2 Parameters for contact discharge ESD simulator

A.2.1 Switch

A switch device is used to simulate the natural spark in a controlled manner. The switch is designed to satisfy the following objectives:

a) Produce fastest rise time of natural spark
b) Maintain maximum reproducibility between discharges
c) Allow discharge rates according to the needs of multipulse testing
d) Handle the required current and voltage
e) Meet the longevity needs of multipulse testing

A.2.2 Coupling probe

The objectives of 7.5.4.4 require that a firm metallic contact be made to conductive surfaces of an EUT.

Insulating coatings not designed to insulate against ESD discharges for the lifetime of a product can be penetrated to obtain metallic contact. Penetration can be made with insignificant degradation of the EUT appearance by using a sharp needle tip for the probe.

The physical arrangement of components and dimensions of the probe significantly affect the current pulse shape and energy. The design should be such that the pulse shape specifications of tables 4 and 5 are satisfied.

A.2.3 Discharge resistor

It has been shown that a discharge resistor of 330 Ω for human body discharge simulation (hand/metal) and a discharge resistor of 15–75 Ω for furniture discharge simulation are suitable to obtain the desired pulse shapes. Further, it has been shown that stray capacitance and inductance of the probe affect the pulse shape significantly.

A.2.4 Energy source for the test discharge

A storage capacitance is used that is representative of the capacitance of both the human body and metallic furniture. A nominal value of 150 pF has been determined suitable for this purpose. Dimensional details for a distributed capacitance approach are shown in figure A2.

A.2.4.1 Physical design of the storage capacitance

The capacitance shown in figure A1 has been represented in simulator design by a discrete capacitor or by a metallic structure. Each model satisfies specific objectives.

A.2.4.1.1 Discrete capacitor

A discrete capacitor has been used in hand-held simulators. See figure A1 for a typical example. It has been concluded from recent studies that the probe of such simulators can be made to simulate the distributed capacitance of a human hand by the normal stray capacitances of the components.

Copyright The Institute of Electrical and Electronics Engineers, Inc.
Provided by IHS under license with IEEE
No reproduction or networking permitted without license from IHS Not for Resale

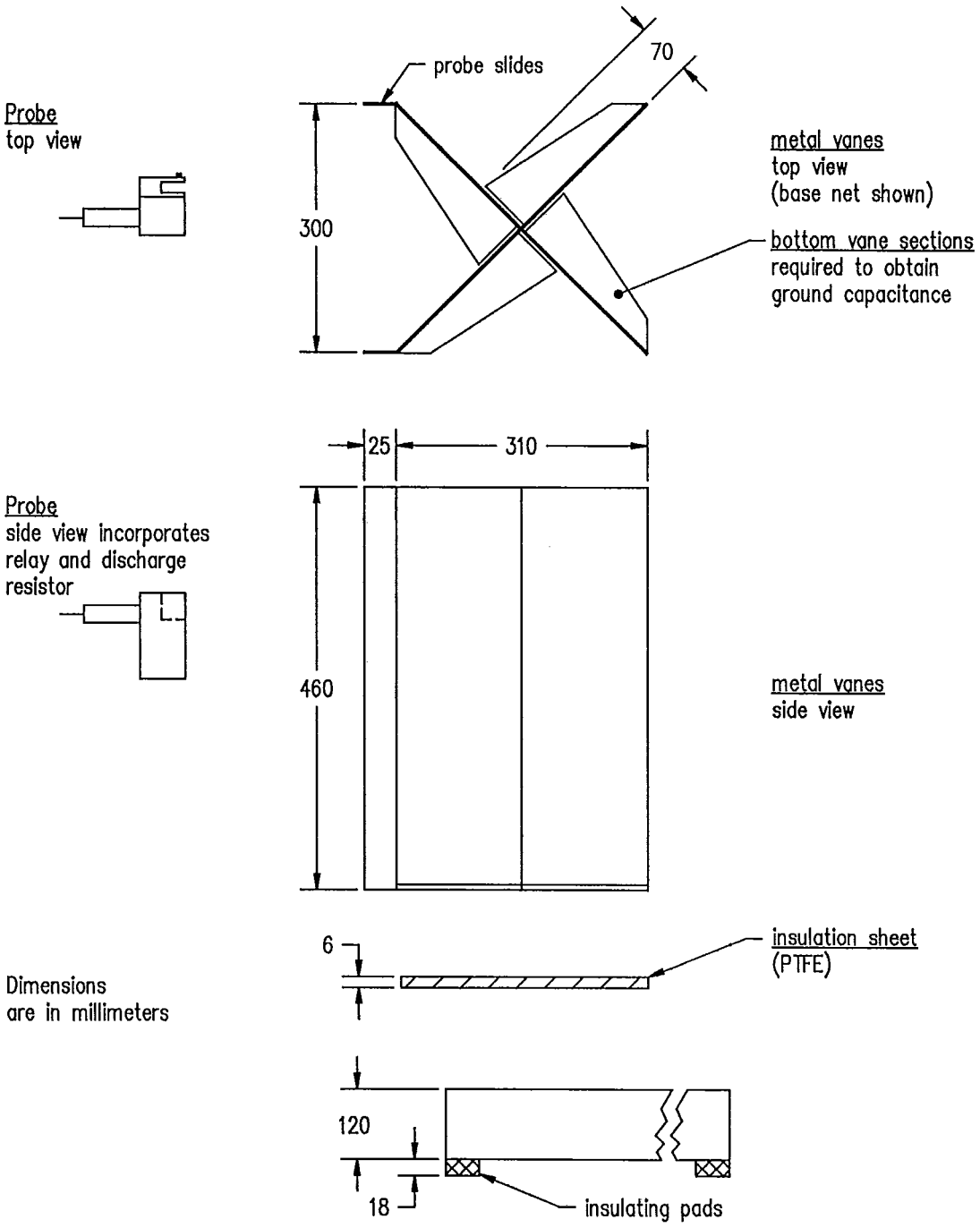

Figure A2—Distributed storage capacitance

Copyright The Institute of Electrical and Electronics Engineers, Inc.
Provided by IHS under license with IEEE
No reproduction or networking permitted without license from IHS

Not for Resale

A.2.4.1.2 Distributed capacitance

Analytical studies of charged bodies (human body and metallic furniture) and a need for a reproducible setup have led to a vane structure that simulates actual distributed capacitances more ideally and minimizes variability due to placement. A practical example is shown in figure A2. An advantage of the vane structure over a flat metal plate is that its capacitance is relatively insensitive to its distance from other bodies.

The vane structure is recommended for the storage capacitance when the radiated field of a discharging body is considered to be a determining factor of energy transfer to an EUT, as it can be assumed in the case of indirect discharge.

The vane assembly can be used for direct discharge into metallic surface elements of an EUT (see 7.5.4.4). For this purpose, the probe is clamped at a suitable position on the vane edges as indicated in figure A3 (a).

Obviously, the radiated field should be the only coupling medium between the tester and EUT in the case of indirect discharge as required by 7.5.5. With the product not completely shielded, intermediate situations are conceivable where both the current pulse and the radiated field determine the compliance level.

In indirect ESD testing, the vane structure has an advantage over a flat metal plate because the capacitance of the vane structure is relatively insensitive to its distance from other bodies.

To perform an indirect discharge test, the charged vanes are discharged through the probe into the metal base (drained to ground). The change from a direct contact test to an indirect contact test is depicted in figure A3 (b) and (c). The fixture required for this purpose is not shown in the drawing. The vane assembly itself is placed at the EUT such that the two probe sides (left-hand edges in the drawing) are equidistant from and parallel to the vertical surface plane to be tested. A distance of 70 mm from the surface plane is recommended.

Copyright The Institute of Electrical and Electronics Engineers, Inc.
Provided by IHS under license with IEEE
No reproduction or networking permitted without license from IHS Not for Resale

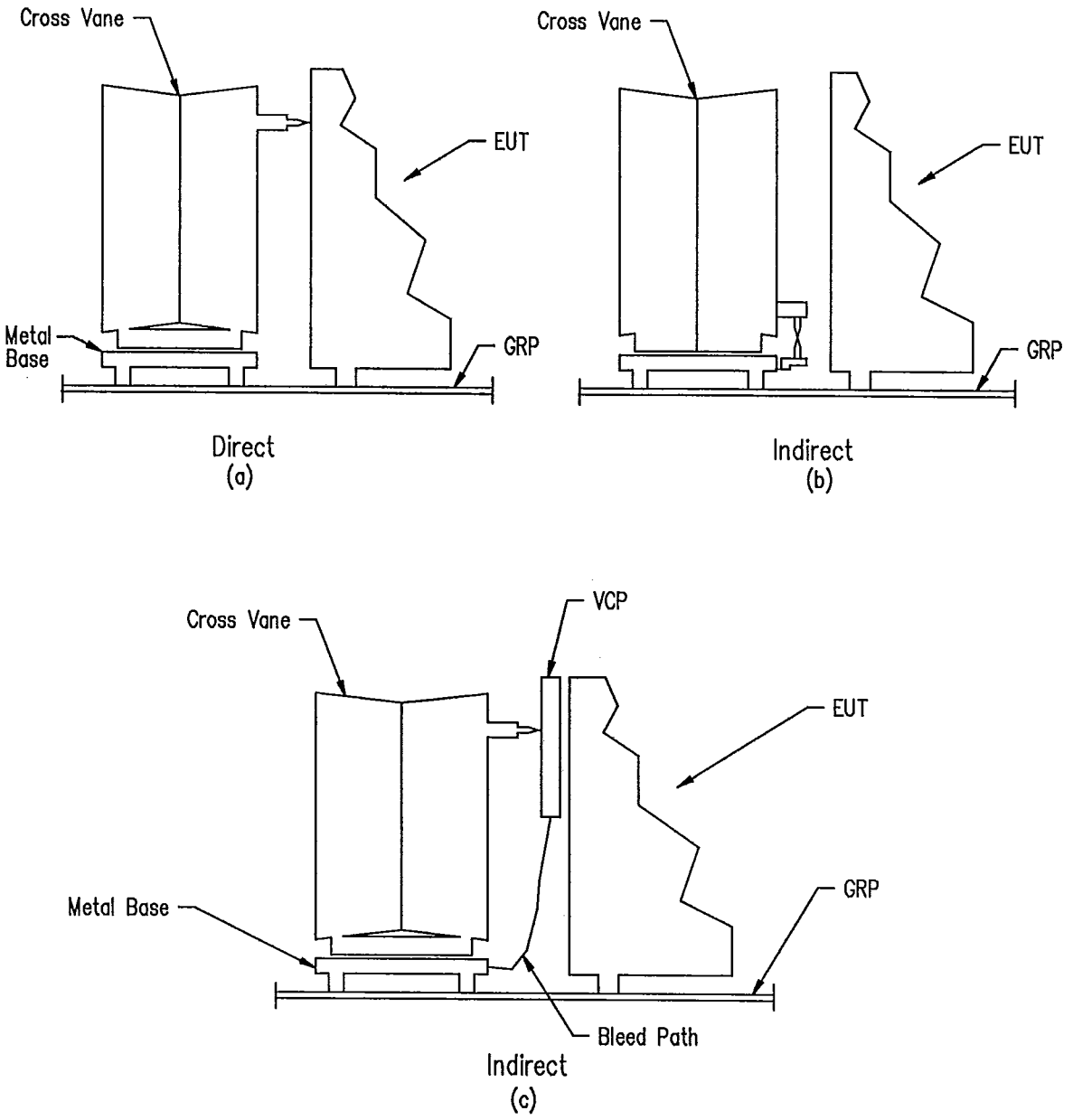

Figure A3—The distributed capacitance cross vane simulator connected for direct and indirect ESD testing of an EUT

Copyright The Institute of Electrical and Electronics Engineers, Inc.
Provided by IHS under license with IEEE
No reproduction or networking permitted without license from IHS

Not for Resale

Annex B
Standard target descriptions

(informative)

B.1 Constructional details, current sensing transducer (target)

The constructional details for one form of a CURRENT SENSING TRANSDUCER are shown in figures B1 through B6. The following sequence of assembly should be followed:

a) Solder the 25 RESISTORS, item 8, on the OUTPUT SIDE DISC, item 3. The soldered leads of the RESISTORS should be shaved to be flush with the OUTPUT SIDE DISC. These RESISTORS should be selected to render a parallel combination of 2 Ω. They should be Allen Bradley carbon composition, type CB or equivalent.
b) Solder the five matching RESISTORS, item 7, in a pentagonal disposition into the OUTPUT CONNECTOR, item 6 (UG58 A/U, Type N). The RESISTORS should be selected to render a parallel combination of 48 Ω. These RESISTORS should be Allen Bradley carbon composition, type CB or equivalent.
c) Assemble the OUTPUT SIDE DISC, item 3, complete with RESISTORS, item 8, on the OUTPUT CONNECTOR FLANGE, item 2, with three #4-40 × 1/4 SCREWS, item 10.
d) Assemble the OUTPUT CONNECTOR, item 6, complete with RESISTORS, item 7, to the OUTPUT CONNECTOR FLANGE, item 2, by four #4-40 × 1/4 SCREWS, item 10.
e) Solder the INPUT SIDE DISC, item 4 to items 7 and 8. Shave the soldered RESISTOR leads.
f) Using item 9, #2-56 × 1/4 SCREW, assemble the DISCHARGE DISC, item 5, to the INPUT SIDE DISC, item 4.
g) Assemble the MAIN HOUSING, item 1, to the OUTPUT CONNECTOR FLANGE, item 2, using eight #4-40 × 1/4 SCREWS, item 10.
h) The CURRENT SENSING TRANSDUCER when measured at the CONNECTOR (UG58 A/U, Type N) should exhibit a VSWR no greater than 1.3 at frequencies up to 2 GHz.

B.2 Details of setup for current probe transducer method

B.2.1 Description

The current probe method requires the following five component parts:

a) Standard plate, vertically positioned over a GRP
b) Tektronix CT-1™ current probe (with associated P6040 probe cable), slightly modified to allow direct contact between the probe metallic case and the standard plate surface (see figure 12)
c) The discharge stud projects through the current probe and standard plate apertures (it provides a surface for discharging at one end and makes direct contact with the exposed metallic case of the current probe at the other end)
d) Standard plate ground wire
e) GRP

NOTE—Using a 1 GHz oscilloscope provides a measurement bandwidth of approximately 700 MHz, which is sufficient for making the required measurements.

Copyright The Institute of Electrical and Electronics Engineers, Inc.
Provided by IHS under license with IEEE
No reproduction or networking permitted without license from IHS Not for Resale

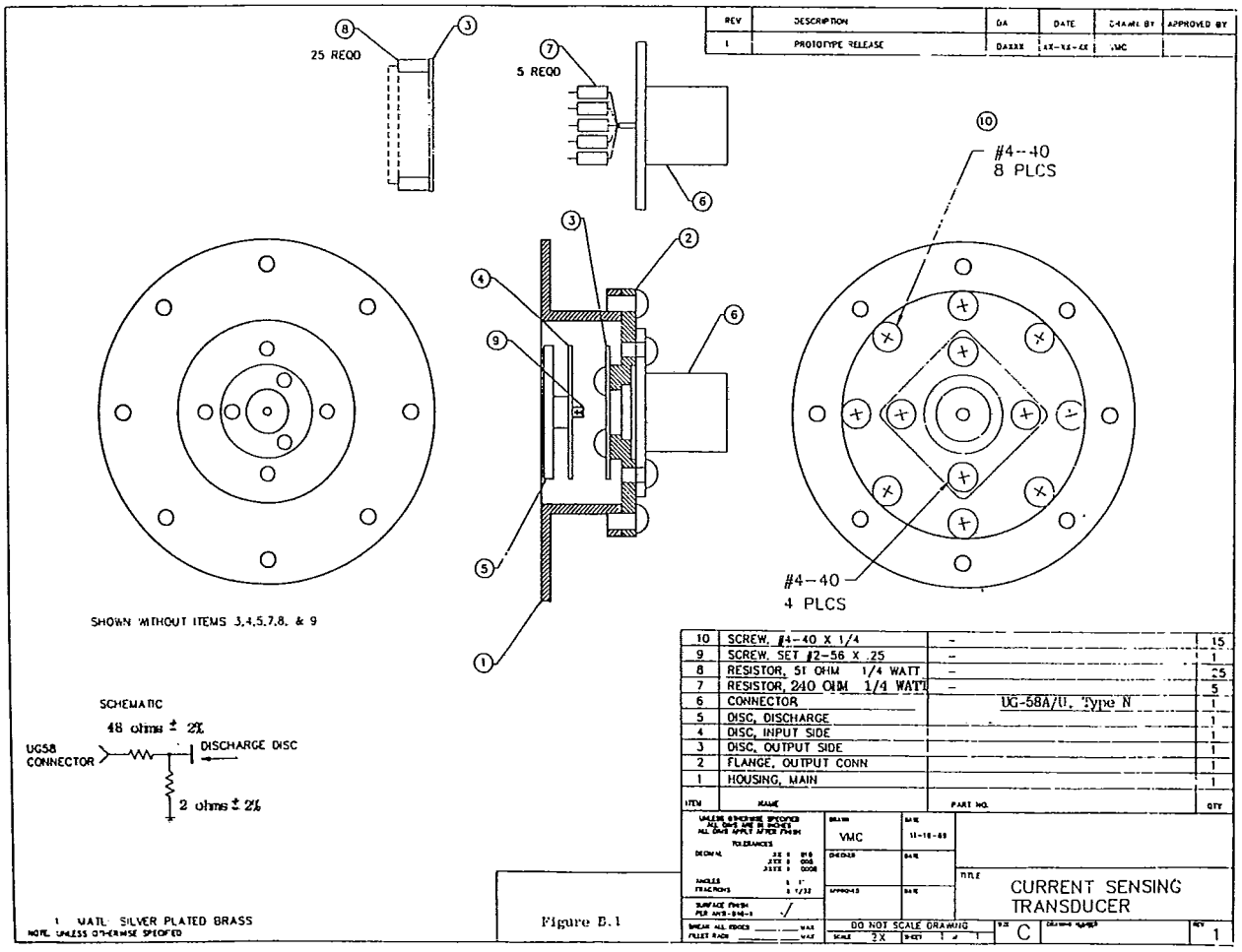

Figure B1—Current sensing transducer—Overall view

Copyright The Institute of Electrical and Electronics Engineers, Inc.
Provided by IHS under license with IEEE
No reproduction or networking permitted without license from IHS

Not for Resale

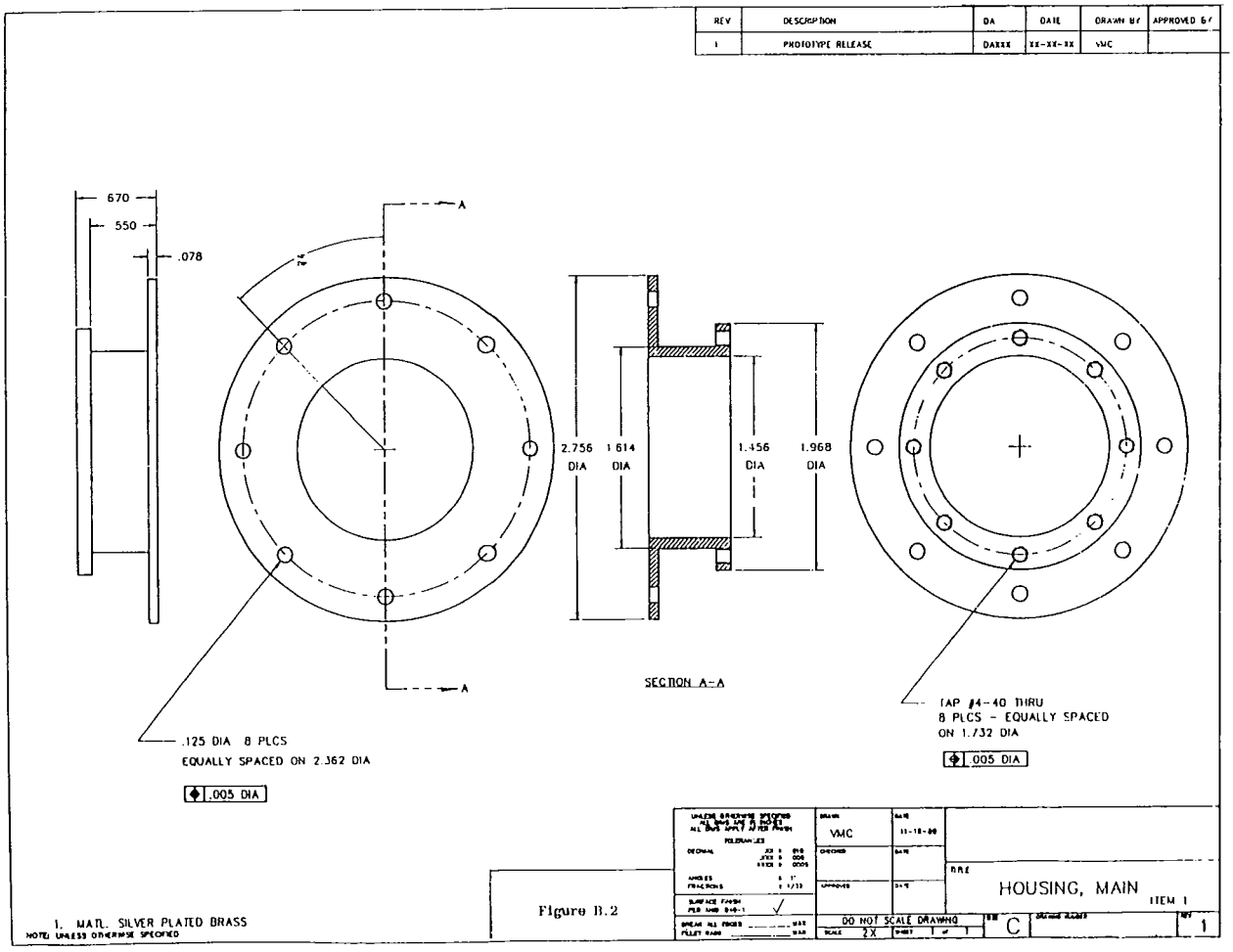

Figure B.2

Figure B2—Current sensing transducer—Main housing (item 1)

Copyright The Institute of Electrical and Electronics Engineers, Inc.
Provided by IHS under license with IEEE
No reproduction or networking permitted without license from IHS

Not for Resale

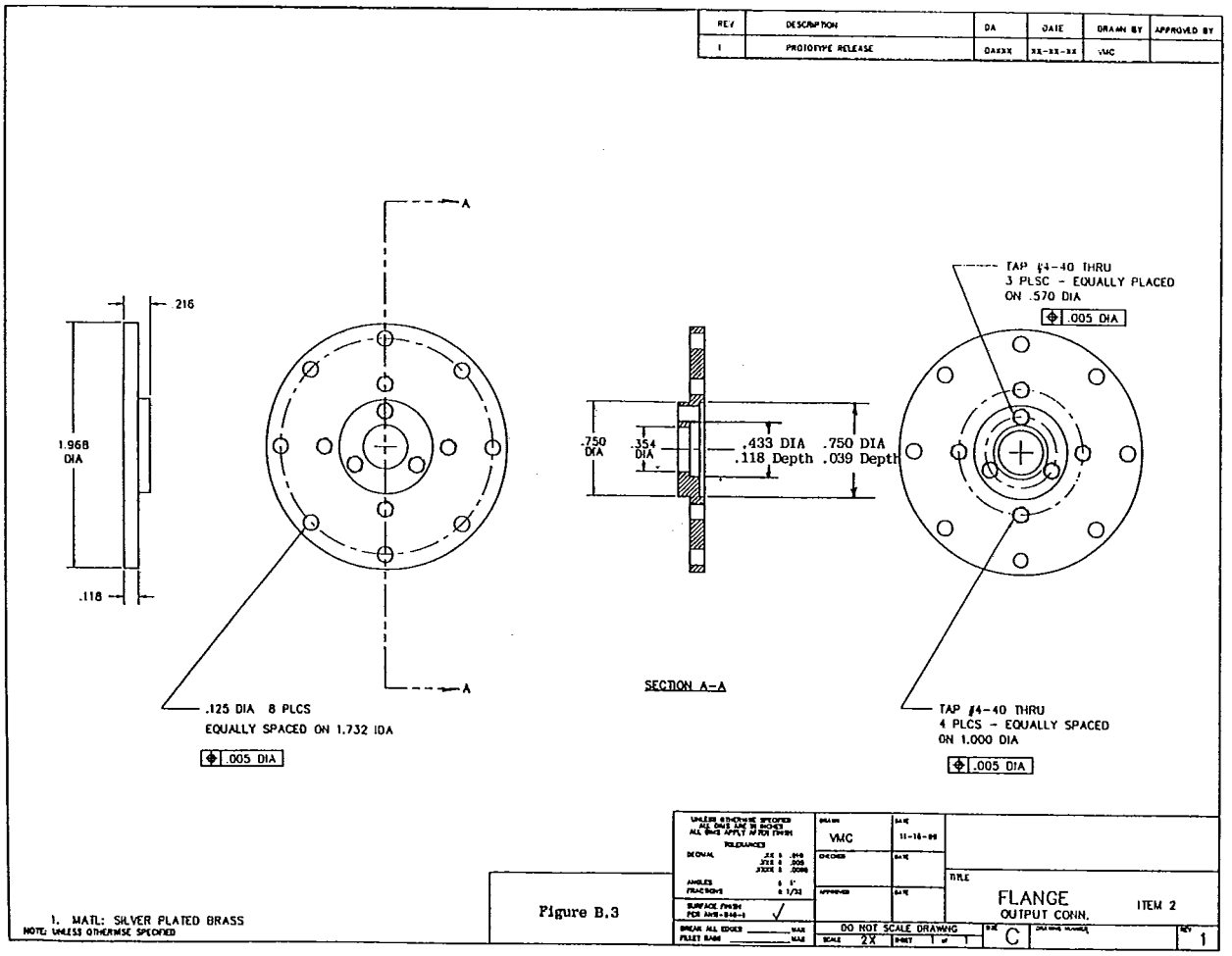

Figure B.3

Figure B3—Current sensing transducer—Flange (item 2)

Copyright The Institute of Electrical and Electronics Engineers, Inc.
Provided by IHS under license with IEEE
No reproduction or networking permitted without license from IHS

Not for Resale

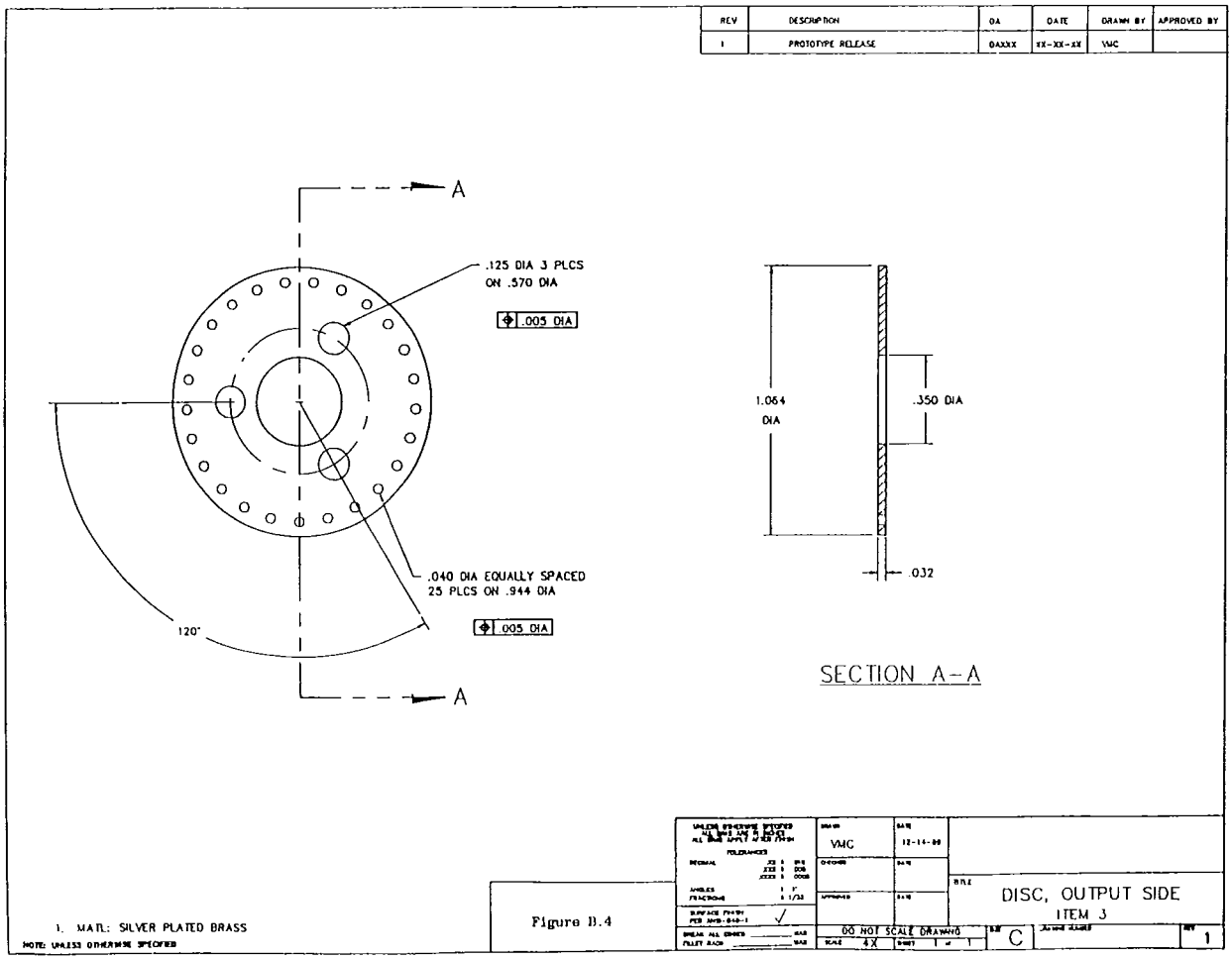

Figure B.4

Figure B4—Current sensing transducer—Output side of disc (item 3)

Copyright The Institute of Electrical and Electronics Engineers, Inc.
Provided by IHS under license with IEEE
No reproduction or networking permitted without license from IHS

Not for Resale

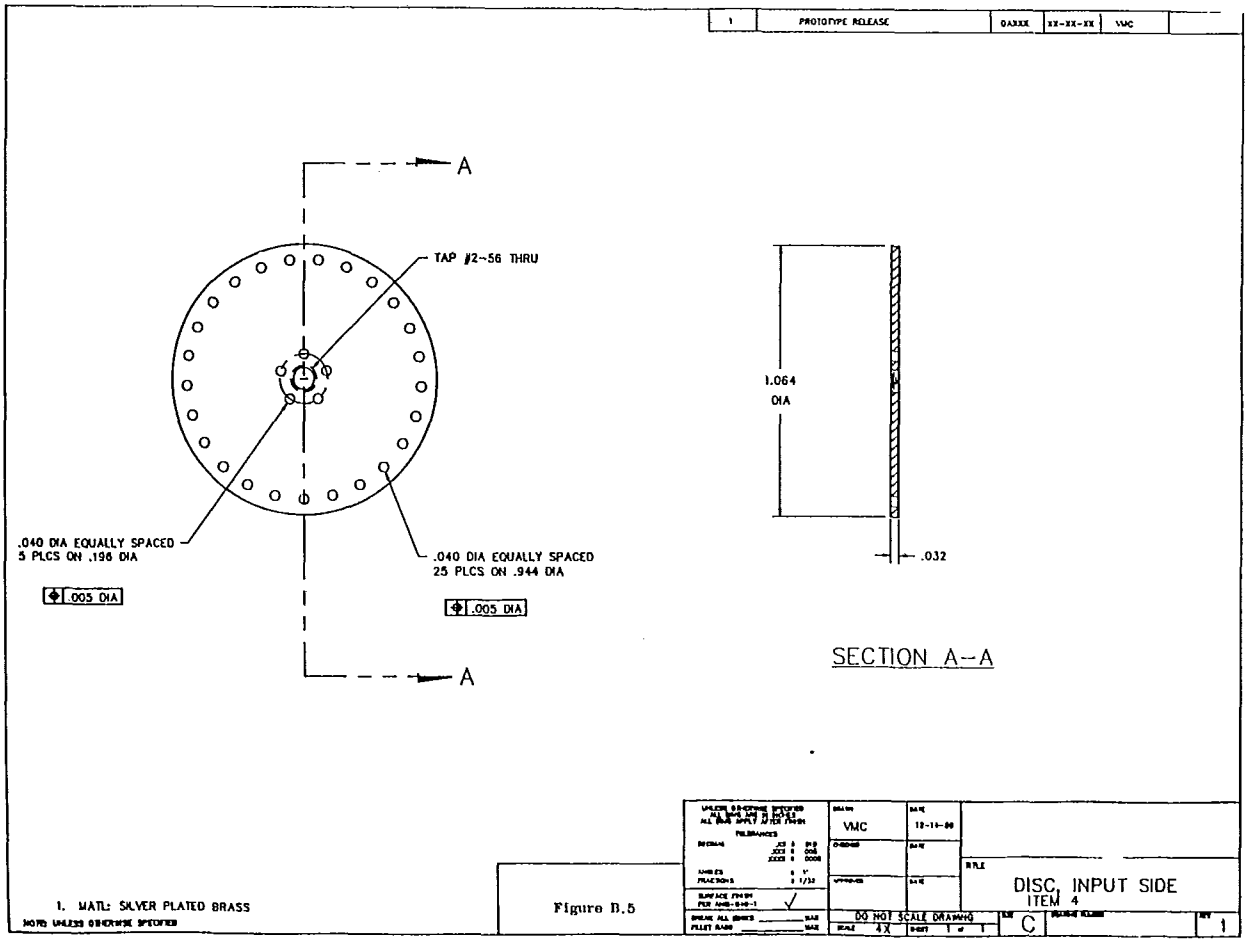

Figure B.5

Figure B5—Current sensing transducer—Input side of disc (item 4)

Copyright The Institute of Electrical and Electronics Engineers, Inc.
Provided by IHS under license with IEEE
No reproduction or networking permitted without license from IHS

Not for Resale

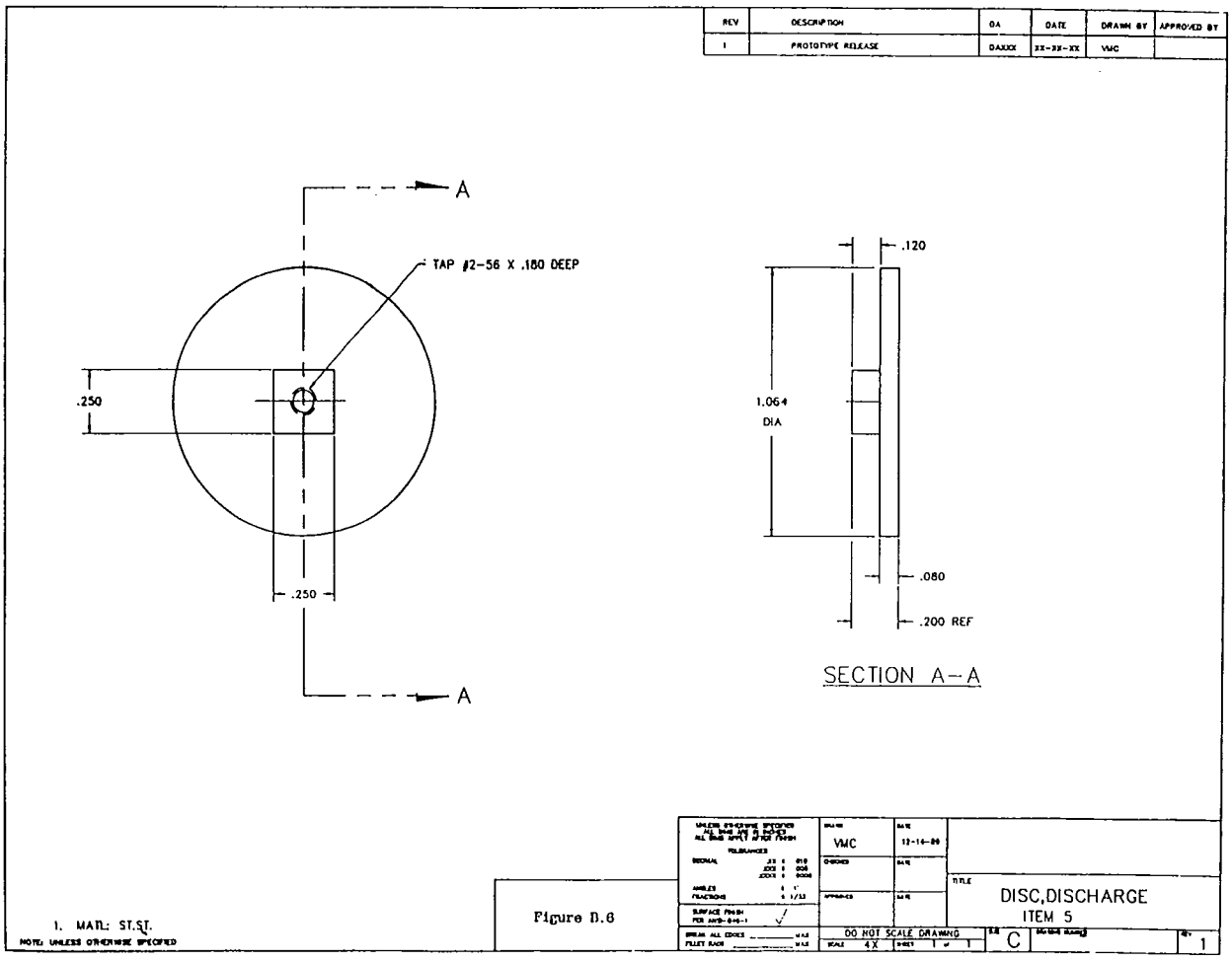

Figure D.6

Figure B6—Current sensing transducer—Discharge disc (item 5)

Copyright The Institute of Electrical and Electronics Engineers, Inc.
Provided by IHS under license with IEEE
No reproduction or networking permitted without license from IHS

Not for Resale

B.2.2 Standard Plate

The plate is constructed of 3.2 mm thick aluminum, 1.22 m by 1.22 m or larger. The plate is held in position by a nonconducting support frame. A 9.5 mm diameter hole is drilled in the plate center to accommodate the discharge stud and rubber insulating gasket. The bottom edge of the plate is positioned above the GRP with a 5 mm air gap using a spacer. The spacer is not used if the GRP is covered with the 5 mm insulator described in 6.4.2. The standard plate should not make direct contact with the GRP.

B.2.3 Current probe modification

The insulating plastic jacket is removed from the CT-1™. This can be done without destroying the jacket by loosening the jacket attachment to the probe case and forcing it back past the connector end of the probe. The probe aperture insulating plastic sleeve is not removed, but it may require length trimming such that it does not project beyond the outer surfaces of the aperture.

B.2.4 ESD simulator discharge stud

The discharge stud is a 13 mm long #0-80 bolt (or equivalent), small enough to pass through the CT-1™ aperture containing the insulating sleeve. A nut attaches the bolt to the back (-) side metallic surface of the probe. An insulating washer isolates the bolt head from the front (+) side of the probe. A grommet (about the same diameter and thickness as the plate hole) is placed over the stud on the (+) side of the probe to maintain isolation through the probe. With this arrangement the bolt contacts the case only on the back (-) side of the probe. The (+) side nut should be about 4–5 mm wide. This is the surface used to make contact with the simulator discharge tip.

The CT-1™ is placed on the back side of the standard plate with the stud centered in the plate hole. The insulating washer should occupy most of the hole area to prevent contact between the stud and the plate. The current probe is held in place, under pressure, using an arbitrary standard plate frame member. Tight physical contact is required between burnished surfaces of the exposed probe case (+) side and the standard plate area surrounding the hole.

The ESD simulator current injection tip must make physical contact with the stud surface. The CT-1™ is terminated with a 50 Ω load impedance.

B.2.5 Standard plate ground wire

The standard plate ground wire is used to discharge the standard plate between simulator discharges. For this purpose a #10 AWG (or smaller) stranded wire not exceeding 3 m in length is used to connect the plate to the GRP. (It is not intended to provide an RF low impedance path to ground.)

B.2.6 Typical setup

In order to obtain proper waveforms, the distributed capacitance ESD simulator should be placed on the GRP, as stated in 6.4.2, and the standard plate should be vertically positioned above the GRP. See figure 8 for the typical setup.

Copyright The Institute of Electrical and Electronics Engineers, Inc.
Provided by IHS under license with IEEE
No reproduction or networking permitted without license from IHS

Not for Resale

Annex C
Example procedure for establishing an ESD test criteria

(informative)

C.1 Introduction

This annex provides one example of an ESD test criteria analysis for a product. The product is a floor-standing computing device, designed to operate in a controlled environment where furniture-type discharges have a relatively high probability of occurrence. The three-phase method described in clause 8 was used to establish ESD test criteria. Using the steps outlined in 8.3 and in figure 10, the EUT was tested to determine if it would operate properly in its intended environment.

C.2 Phase I: Definition

Step A: A controlled operating environment using a direct-injection, furniture-type discharge will be used. No nonrecoverable or destructive responses will be allowed.

Step B: In order to select the test voltages, the expected number of ESD events that can occur at various levels must be known. Normally, there is no need to test at voltages higher than those expected in the EUT's normal operating environment. On the other hand, if the maximum test voltage is less than the highest voltage that can occur, there is an increased risk that the test results will not be representative of how the EUT will behave in its intended environment.

The expected number of ESD events that can occur at various voltage levels can be determined from estimated or measured levels [B21], [B25]. Using the empirical data referenced in [B25], the expected number of actual ESD events per hour, EV, that occur at or above a given voltage, V, can be approximated by KV^Y where the constants K and Y for different environments and types of ESD are shown in table C1.

Table C1—Constants for different environments and types of ESD

Type of ESD	Controlled environment		Uncontrolled environments	
	K	Y	K	Y
Hand/metal ESD	3.2×10^7	-2.44	1.4×10^6	-1.86
Furniture ESD	3.0×10^5	-2.44	4.0×10^4	-1.86

The expected number of actual ESD events per hour, Ei, that occur in the voltage range $V1$ to $V2$ is simply the difference $Ev1$ - $Ev2$. The distribution of actual ESD events per hour over a given voltage range can then be determined by subdividing the range into a series of incremental differences.

Setting $K = 3.0 \times 10^5$, and $Y = -2.44$, the expected number of actual ESD events per hour for various voltage ranges are given in table C2.

Based on table C2, the minimum test voltage is 2 kV, and the maximum test voltage is 6 kV. The assumption is made that furniture ESD voltages above 8 kV will occur with such a low probability that they do not need to be considered and that discharges below 1 kV seldom cause an undesired response. If a similar table is

Copyright The Institute of Electrical and Electronics Engineers, Inc.
Provided by IHS under license with IEEE
No reproduction or networking permitted without license from IHS

Not for Resale

Table C2—Expected ESD events per hour, E_i

i	V_{i-1}	V_1	$E_i = E_{v(i-1)} - E_{v(i)}$
1	1 kV	2 kV	0.0117128
2	2 kV	3 kV	0.0016622
3	3 kV	4 kV	0.0004962
4	4 kV	5 kV	0.0002047
5	5 kV	6 kV	0.0001015
6	6 kV	7 kV	0.0000568
7	7 kV	8 kV	0.0000346

constructed for hand/metal discharges, the assumption is made that ESD voltages above 12–15 kV have a very low probability of occurrence [B24].

C.3 Phase 2: Search trials

Step C: The EUT was subjected to simulated discharges, starting at 2 kV and increasing in 1 kV increments up to 6 kV. Both positive and negative polarities were injected. At each voltage, a sufficient number of discharges were induced to confirm the presence or absence of sensitive time windows. Sensitive test points were also identified. The results of the initial search trials were as follows:

1) *Voltage Polarity Sensitivity:* Positive polarity produced more undesired responses.
2) *Window Effects:* Successive sequences of 100 discharges resulted in a variable number of nonrecoverable EUT responses at 2 kV and 4 kV.
3) *Sensitive Test Points:* The front, left, and rear of the EUT were found to be sensitive to discharges.

Step D: The window effects did not meet the acceptance criteria defined in step A. The EUT was redesigned (steps E and F), and the test was repeated (step C). After the redesign, no further window effects were noted.

C.4 Phase 3: Final verification test

Step G: Based on the results of the search trials, the front, rear, and left side of the EUT were tested. Since the front surface has a much higher chance of being hit by a furniture type discharge, the decision was made to distribute the simulated responses in the following manner: front side—50%, rear and left side—25% each. A 95% confidence level was desired.

Step H: Table C3 shows the results of performing a final verification test using Test Method A (see 8.3.3.1). After 13 415 test trials, the EUT was proven to have an MTBUR greater than 10 000 h at a 95% confidence level.

Copyright The Institute of Electrical and Electronics Engineers, Inc.
Provided by IHS under license with IEEE
No reproduction or networking permitted without license from IHS
Not for Resale

Table C3— Final verification using Method A

Step 1: MTBUR = 10 000 h		**Step 4: C = 0.950** **Step 5: T = 2.996**	**Step 8:** **Number of ESD events**		
Step 2	**Step 3**	**Steps 6 and 7**	**Front (50%)**	**Rear (25%)**	**Left side (25%)**
$V1$ = 2 kV	$E1$ = 1.171E-02	$N1$ = 7420	3710	1855	1855
$V2$ = 3 kV	$E2$ = 1.662E-03	$N2$ = 2795	1398	699	699
$V3$ = 4 kV	$E3$ = 4.963E-04	$N3$ = 1527	764	382	382
$V4$ = 5 kV	$E4$ = 2.047E-04	$N4$ = 981	491	245	245
$V5$ = 6 kV	$E5$ = 1.016E-04	$N5$ = 691	346	173	173
L = 5	$E7$ = 5.684E-05 +$E8$ = 3.461E-05	N_{tot} = 13 415			

	E_{max} = 9.145E-05				
Step 9: Induce simulated discharge per step 8 values. If no undesired responses are noted during the test, there is a 95% probability that the MTBUR is greater than 10 000.					

Table C4 shows the results of performing a final verification test using Test Method B (see 8.3.3.2). After 6750 test trials, the EUT was estimated to have an MTBUR of 9127 h at a 95% confidence level.

In both cases, no undesired responses were noted during the test.

Copyright The Institute of Electrical and Electronics Engineers, Inc.
Provided by IHS under license with IEEE
No reproduction or networking permitted without license from IHS

Not for Resale

Table C4—Final verification test using Method B

Step 1 V_i	Step 2 V_i	Steps 3 and 4 N_i	Step 5 N_{tp} Front (50%)	Step 5 N_{tp} Rear (25%)	Step 5 N_{tp} Left side (25%)	Steps 6 and 7 MUR_i	Step 8 UL_i	Step 9 EUR_i
$V1 = 2$ kV	$E1$ = 1.171E-02	$N1 = 3000$	1500	750	750	0	8.196E-04	9.598E-06
$V2 = 3$ kV	$E2$ = 1.662E-03	$N2 = 2000$	1000	500	500	0	1.229E-03	2.043E-06
$V3 = 4$ kV	$E3$ = 4.963E-04	$N3 = 1000$	500	250	250	0	2.457E-03	1.219E-06
$V4 = 5$ kV	$E4$ = 2.047E-04	$N4 = 500$	250	125	125	0	4.906E-03	1.004E-06
$V5 = 6$ kV	$E5$ = 1.016E-04	$N5 = 250$	125	63	63	0	9.785E-03	9.942E-07
$L = 5$	$E7$ = 5.684E-05 $E8$ = 3.461E-05	N_{tot} = 6750						

	E_{max} = 9.145E-05							9.145E-05

Note that in this example, E_i decreases fairly rapidly with increasing Vi. Since $EURi$ is equal to $Ei \cdot ULi$, the number of trials, Ni, can be decreased without significantly increasing $EURi$.

Step 10 $\Sigma = 1.10E\text{-}04$
$1/\Sigma = 9127$ h

For a 95% confidence level, the estimated MTBUR of the system is at least 9127 h.

Copyright The Institute of Electrical and Electronics Engineers, Inc.
Provided by IHS under license with IEEE
No reproduction or networking permitted without license from IHS
Not for Resale

Annex D
Test method guidance—Air or contact discharge

(informative)

D.1 Test method selection

The particular test method (air or contact, see 7.1.1) selected as appropriate for EUT evaluation should be determined by first establishing an intended result for the information that will be gained from the ESD test. The following clauses provide an overview of the two approaches, in conjunction with the advantages and disadvantages of each approach.

D.2 Air discharge

The air discharge method virtually replicates ESD as it would occur in the actual environment. In effect, this means the following:

a) The impulse waveforms are allowed (and expected) to vary significantly from pulse to pulse.
b) The impulse current delivered to the EUT will vary from pulse to pulse.
c) The distance of the air gap at the time of breakdown will change depending on the characteristics of the EUT surfaces that, in turn, may alter the actual voltage at which the ESD occurs to the EUT.

D.2.1 Air discharge advantages

The advantage of the air discharge method is that EUT responses will be caused by phenomena that are similar to actual ESD events. This means that for a given ESD test voltage, one ESD pulse may cause an EUT response, while another pulse may not. When the EUT does respond, that response may be different from discharge to discharge [B12]. As a result, the test provides an estimate of the performance of the EUT in its actual operating environment. Another benefit is that any insulating surfaces or air gaps in the EUT that prevent ESD can be evaluated for breakdown voltage. Finally, air discharge simulates the nonlinear relationship between amplitudes of ESD voltage and current found in natural ESD.

D.2.2 Air discharge disadvantages

The major disadvantage to the air discharge ESD method is that, in practice, performance of the method may result in a tedious test series. The air discharge test may require several hours of test time because of the need to apply (possibly) hundreds of ESD pulses to an EUT in order to fully (adequately) evaluate and understand the responses of the EUT and their probabilities of occurrence. Apart from the disadvantage of test time, the EUT may respond inconsistently to the ESD excitations. This produces serious repeatability problems in the test results, requiring further ESD tests to ultimately determine the performance profile of the EUT.

D.3 Contact discharge

The contact discharge method simulates ESD, but it does not replicate all of the characteristics of the actual ESD phenomena. The contact discharge method provides a more repeatable ESD test simulation. In effect, this means the following:

a) The impulse waveforms are controlled to not vary significantly from pulse to pulse.
b) The impulse current delivered to the EUT will remain relatively consistent from pulse to pulse.
c) The variabilities associated with the air gap at the time of discharge will generally be avoided and will not depend on the characteristics of the EUT surfaces, provided that the EUT surfaces are not fully nonconductive in construction.

Copyright The Institute of Electrical and Electronics Engineers, Inc.
Provided by IHS under license with IEEE
No reproduction or networking permitted without license from IHS
Not for Resale

D.3.1 Contact discharge advantages

The major advantage of the contact discharge method is that the consistency and repeatability of the ESD test waveforms usually result in consistent and repeatable EUT performance. The contact discharge test method is less tedious than the air discharge method since it can be performed in a more automated manner, with the impulses applied to the EUT at a relatively fast pulse repetition rate. In practice, the use of the contact discharge method permits the evaluation of EUT susceptibility to ESD to be made in a manner that significantly conserves test time.

D.3.2 Contact discharge disadvantages

The major disadvantage of the contact discharge method is that it relies on the surface conductivity at the point of test application and thus does not evaluate the breakdown (standoff) ESD voltage of EUT surfaces or the air gap distances between the ESD source and internal conductive members. Contact discharge testing also does not provide an estimate of EUT response to actual-use ESD voltages, since the random variations in the ESD waveform that exist in nature are not reproduced. Finally, the ESD voltage and current become directly proportional during these tests, whereas the relationship between voltage and current in naturally occurring ESD is nonlinear.

D.4 EUT surfaces

The decision on which test method to use may be based partly on whether the surfaces of the EUT are conductive or nonconductive.

D.4.1 Conductive surfaces

Conductive surfaces and coupling planes may be subjected to either the air or contact discharge test methods.

D.4.2 Nonconductive surfaces

For insulating surfaces, the air discharge method (by its inherent nature) is predominantly used. The air discharge method is also useful in determining the breakdown voltages of surfaces that have a conducting substrate (subsurface), with an insulating surface layer. If the contact discharge method is used in this latter situation by penetrating the insulating surface layer, it may result in excess current being applied to the EUT, compared to the current in air discharge, since the arc path impedance will be missing. For fully insulating surfaces, the contact discharge test method may be used, but it will be an indirect test that is performed by applying the contact ESD to a conductive plane that is adjacent to the nonconductive surface under evaluation.

D.4.3 Indirect ESD tests

When performing indirect ESD testing, either the air or contact method may be used, depending on the compatibility of the test method with the goals established for the simulation as discussed in D.2 and D.3.

Copyright The Institute of Electrical and Electronics Engineers, Inc.
Provided by IHS under license with IEEE
No reproduction or networking permitted without license from IHS

Not for Resale

Annex E
Actual ESD event waveforms

(informative)

E.1 ESD waveform influences

The actual ESD impulse waveforms that occur in actual-use environments are known to exhibit wide distributions in rise times, peak currents, and pulse widths. Many factors contribute to these distributions, including the following:

a) Source of the discharge (e.g., human tissue direct, human tissue in contact with metal objects, and humans in contact with mobile furnishings)
b) Surface area of contact between human tissue and any metallic object that is intervening in the ESD path
c) Initialization ESD voltage immediately prior to discharge
d) Shape of the surface executing the discharge and shape of the surface subjected to the ESD
e) Velocity of closure of the gap between the objects being discharged
f) Impedance and surface conditions of the object subjected to discharge
g) Moisture content (relative humidity and temperature) of the environment at the time of discharge
h) Barometric pressure (altitude) of the environment during discharge

The composite result of the interaction of these factors in the ESD phenomena is that ESD impulse waveforms (and accordingly, the spectral energy distribution) will vary significantly.

E.1.1 ESD test limitations

These test limitations are necessary considering the exceptionally wide distributions of rise and fall times, peak currents, and pulse widths that are known to be common in actual ESD. Although the parameters for ESD test simulators shown in this guide have been researched exhaustively and found to be broadly appropriate for industry, the user is advised that actual ESD events may have more or less severe effects on EUT performance, depending on the factors listed in E.1.

E.2 Actual ESD waveform distributions

Tables E1 and E2 provide examples of actual ESD waveform distributions. The data exhibited by the tabulations that follow has been gathered from research papers listed in clause 10. Since the source of the ESD has a dramatic effect on the waveforms, the following two common actual ESD source conditions have been selected for review in this annex:

a) ESD from humans through small hand-held metallic objects (e.g., keys, coins)
b) ESD from human finger touch directly

It should be noted that other conditions (ESD from furnishings and ESD from other body locations) can result in more intense ESD currents [B4], [B9], [B14].

Copyright The Institute of Electrical and Electronics Engineers, Inc.
Provided by IHS under license with IEEE
No reproduction or networking permitted without license from IHS
Not for Resale

E.2.1 Human/metal object (hand/metal)—Actual ESD waveforms

Table E1 describes actual ESD waveforms resulting from the discharge of a human through a small hand-held metallic object. The waveshapes are described with reference to figure E1.

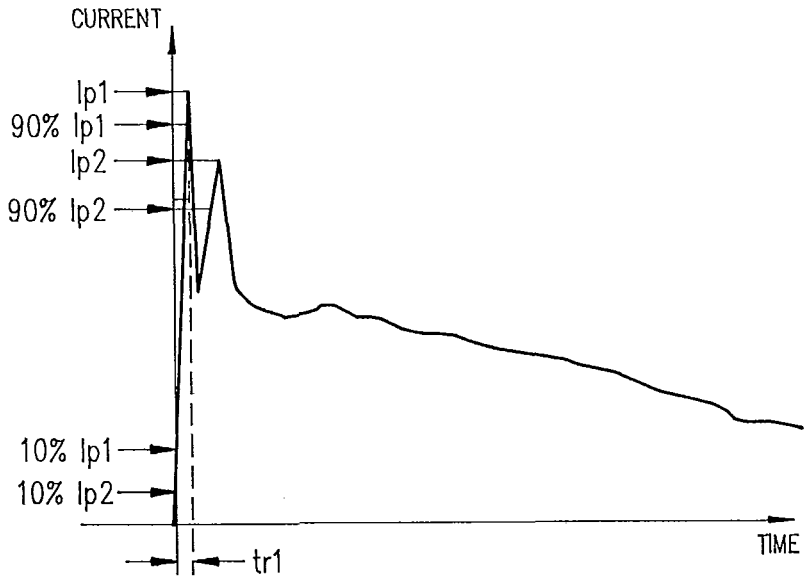

Figure E1—Actual ESD from human through hand-held metallic object

E.2.2 Human finger touch—Actual ESD waveforms

Table E2 describes actual ESD waveforms resulting from the discharge of a human through direct finger touch. In addition to the variables listed in E.1, human finger touch ESD may be influenced by the pressure of the contact at the time of discharge and by other human body factors, such as the residual moisture on the skin surface. The waveshapes are described with reference to figure E1. It should be noted that the data of table E2 should be viewed as approximations for information purposes only, due to a sparsity of available data for this ESD condition.

E.2.3 Comparison note: Table E1 to table E2

A comparison between parameter values of the hand/metal ESD condition exhibited in table E1 and the human/touch values in table E2 yields indications of the complexities involved in establishing simulation values for actual ESD events. The human/touch condition is thought to present greater parameter variabilities than those of hand/metal. These increased variables occur because the electrical values at the immediate surface of human tissue providing the discharge are not as stable as when the discharge derives from a metal object (held by the human) with known conductivity [B4], [B13]. The same comparison also yields the conclusion that actual hand/metal ESD results in far greater impulse peak current levels than those of human/touch. This fact combined with the greater stability of hand/metal values has been responsible for leading industry into the trend of performing EUT tests under hand/metal ESD simulations, rather than the human/touch condition. This trend has developed because products are viewed to have a high exposure to

Copyright The Institute of Electrical and Electronics Engineers, Inc.
Provided by IHS under license with IEEE
No reproduction or networking permitted without license from IHS
Not for Resale

hand/metal ESD events in actual use. These events pose a greater risk to equipment performance because of their greater peak currents.

Table E1—Actual ESD waveform distributions—Human with small hand-held metallic object (hand/metal)

ESD voltage kv	Ip1 (1) current A	Ip2 (1) current A	Range (2) Ip1 A	Range (1, 3) Tr1 ns	Range (2) Ip2 A
2	15	8	10–15	0.20–0.5–1	5–8
4	30	20	20–30	0.24–0.5–1	8–20
6	35	25	12–35	0.25–1–2	12–25
8	50	30	15–50	0.30–1–2	15–30
10	55	35	16–55	0.30–5–30	17–35
12	60	42	20–60	0.30–8–30	22–42
15	80	50	25–80	0.30–10–30	25–50

NOTES

1—ESD initialization voltage, prior to discharge. Ip1, Tr1, and Ip2 listed as composite values between ESD sources with conical points and 8 mm spheres.
2—Range of Ip1 and Ip2 shown to display measured and calculated changes, considering variables listed in E.1.
3—Range of Tr1 tends to group into minimum, typical, and maximum values, based on measurements in references (clause 10) due to variables listed in E.1.

Table E2—Actual ESD waveform distributions—Direct from human finger touch*

ESD voltage kV	Ip1 current A	Ip2 current A	Range Tr1 ns
2	1.7	1	0.20–0.50
4	2.3	2	0.30–3.0
6	3.0	2	0.40–2.0
8	8.0	3	1.0–6.0
10	6.0	4	2.0–N/A†
15	10.0	7	3.0–N/A†

*See [B4], [B13].
†N/A = data not available. The full range of variabilities are not shown because of insufficient data.

Copyright The Institute of Electrical and Electronics Engineers, Inc.
Provided by IHS under license with IEEE
No reproduction or networking permitted without license from IHS Not for Resale

E.2.4 Guidance: Human/touch ESD

Although human/touch ESD is far more frequently encountered in the actual environment than either hand/metal or furniture ESD events, human/touch ESD typically presents significantly less impulse current stress to EUTs than is found from the other sources of ESD. Additionally, the simulator would have to be constructed from a lossy and compliant resistive material, rather than from low-impedance metal, and sufficient research on such simulations is not currently available to develop a standard practice form. Primarily, it is for these reasons that the human/touch condition is not specifically defined or required in this guide. The user of this guide is advised, however, that special EUT product circumstances may dictate acknowledgment of the difference between the EUT stress of human/touch and the hand/metal or furniture ESD simulations delineated in this guide.

Copyright The Institute of Electrical and Electronics Engineers, Inc.
Provided by IHS under license with IEEE
No reproduction or networking permitted without license from IHS

Not for Resale

Annex F
Correlation to other ESD test standards

(informative)

F.1 Correlation issues

As discussed in annex E, the user is advised that actual ESD events may result in EUT performance responses that are more or less severe than those encountered during tests performed in accordance with the recommendations of this guide. In a similar manner, the user of this guide is further advised that any EUT performance results gathered through the use of test methodologies specified by other ESD standards or requirements may not correlate to those results gained by using the recommendations of this guide. The basic reason for these potential differences is a result of the ESD impulse waveforms specified by other standards or requirements and those delineated in this guide. A typical example of such known waveform dichotomies is described in F.2.

F.2 Waveforms of IEC 801-2 (1991)

Table F1 describes the ESD waveform requirements that have been delineated in IEC 801-2 (1991).

Table F1—IEC 801-2 (1991) ESD waveforms for contact discharge

Level	Indicated voltage kV	First peak current of discharge ±10% A	Rise time tr with discharge switch A	Current (±30%) at 30 ns A	Current (±30%) at 60 ns A
1	2	7.5	0.7 to 1	4	2
2	4	15.0	0.7 to 1	8	4
3	6	22.5	0.7 to 1	12	6
4	8	30.0	0.7 to 1	16	8

Table F1 may be compared to table 4 (see 9.4). Comparisons of these requirements yield the conclusion that, in general, the ESD waveforms recommended by this guide establish faster impulse rise times and greater peak currents than those in the IEC document. The rationale for these faster rise times and greater peak currents is founded in high probability that actual ESD events produce them (see E.2). As a matter of correlation, it is possible that the use of the faster ESD simulation rise times specified in this guide could result in more severe EUT performance degradations. This is especially true for electronic technologies that are capable of responding to the higher spectral bandwidths caused by ESD rise times faster than 0.7 ns.

Air and furniture ESD recommendations

It should be noted that since the methods of IEC 801-2 (1991) do not include complete requirements for air ESD and furniture ESD simulations, tables 2, 3, and 5 (see 9.3 and 9.4) in this guide do not have comparable sections in the IEC document.

Copyright The Institute of Electrical and Electronics Engineers, Inc.
Provided by IHS under license with IEEE
No reproduction or networking permitted without license from IHS
Not for Resale

F.3 Rise time measurement limitations

A comparison of table 2 (see 9.2) to the description of actual ESD waveforms in E.2 illustrates the conclusion that the recommendations for the ESD test simulator waveform have been centered on the typical values of rise time variations known to be encountered in actual ESD events. Because of limitations in present measurement technology, many of the specifications for fast rise times stated in this guide do not specify a lower bound (i.e., the rise times of the simulator could be faster and still comply with the requirements of this guide). The rationale for this approach is based on the fact that ESD rise times have been well characterized in research to be significantly faster than the typical values that form the parameters of table 2 (see 9.2). The summary of the faster rise time values found in research is presented in table E1.

F.3.1 Rise time impact on simulator correlation

It is possible that the ESD performance results gathered from EUTs using various simulators (that meet the requirements of this guide) may not exactly correlate with one another, unless the simulators produce identical ESD waveforms. For example, one simulator may have a rise time of 200 ps while another may have a rise time of 500 ps. Should the technologies within the EUT be capable of responding to the higher spectral bandwidth represented by the faster rise time, it is possible that the performance results gained from the simulator with the faster rise time will not correlate to those obtained in tests using the simulator exhibiting the slower rise time.

F.3.2 Recommendation to simulator manufacturers

In order to assist users of this guide in evaluating potential difficulties in EUT performance correlation caused by variations in rise times between simulators of different designs, ESD simulator manufacturers are urged to provide rise time and waveform data in their instruction manuals.

Copyright The Institute of Electrical and Electronics Engineers, Inc.
Provided by IHS under license with IEEE
No reproduction or networking permitted without license from IHS

Not for Resale

Annex G
Vertical coupling plane (VCP) test considerations

(informative)

G.1 Background

The committee believes that discharges to a VCP are necessary to completely test the response of a product to indirect ESD events. The committee also thinks that since there have been no data published on its characteristics and use, the VCP test should be an annex, rather than a part of the actual guide. Personnel performing ESD testing are encouraged to use a VCP per the guidelines below and in 7.5.5 and to publish their results.

When enough data is gathered to permit better understanding of the VCP test, it will be moved into the body of this guide.

G.2 Procedure

Discharges should be applied to the center of one vertical edge of the VCP as shown in figures 6 and 7. Making contact with a point on the flat surface of the VCP produces fields significantly reduced in strength [B16]. The coupling plane, of dimensions 0.5 m by 0.5 m, is placed parallel to the EUT and positioned at a distance of 0.1 m from the EUT. Discharges should be applied to the coupling plane with it placed in sufficient different positions that each of the four faces of the EUT is completely exposed.

NOTE—The plate could be the body of the ESD simulator itself that will be discharged into the reference ground [B5].

Copyright The Institute of Electrical and Electronics Engineers, Inc.
Provided by IHS under license with IEEE
No reproduction or networking permitted without license from IHS
Not for Resale

ISBN 1-55937-403-9

Copyright The Institute of Electrical and Electronics Engineers, Inc.
Provided by IHS under license with IEEE
No reproduction or networking permitted without license from IHS

Not for Resale