IEEE C63.13 91 ■ 4805702 0055943 T ■

American National Standard

Guide on the Application and Evaluation of EMI Power-Line Filters for Commercial Use

ANSI C63.13-1991

ANSI American National Standards Institute

Published by the Institute of Electrical and Electronics Engineers, Inc.
August 7, 1991 *SH14480*

Not for Resale

Copyright The Institute of Electrical and Electronics Engineers, Inc.
Provided by IHS under license with IEEE
No reproduction or networking permitted without license from IHS

ANSI C63.13-1991

American National Standard Guide on the Application and Evaluation of EMI Power-Line Filters for Commercial Use

Accredited Standards Committee On Electromagnetic Compatibility, C63

accredited by the

American National Standards Institute

Secretariat

Institute of Electrical and Electronics Engineers, Inc.

Approved June 28, 1991

American National Standards Institute

Abstract: A basic understanding of the application, evaluation, and safety considerations of electromagnetic interference (EMI) power-line filters used in both ac and dc applications is provided. The construction of an EMI power-line filter and its functions in providing suppression of conducted noise are described. The functions and performance of the filter components, particularly the capacitors and inductors, are discussed. It is explained why seemingly identical filters may not give the same performance in a particular application. No-load insertion-loss test methods are presented. Proper installation of the filters in equipment is discussed. Safety regulations are briefly addressed.

Keywords: capacitors, common-mode noise currents, differential-mode noise currents, electromagnetic interference power-line filters, inductors, no-load insertion loss

The Institute of Electrical and Electronics Engineers, Inc.
345 East 47th Street, New York, NY 10017-2394, USA

Copyright © 1991 by the
Institute of Electrical and Electronics Engineers, Inc.
All rights reserved. Published 1991
Printed in the United States of America

ISBN 1-55937-138-2

No part of this publication may be reproduced in any form, in an electronic retrieval system or otherwise, without the prior written permission of the publisher.

Copyright The Institute of Electrical and Electronics Engineers, Inc.
Provided by IHS under license with IEEE
No reproduction or networking permitted without license from IHS

Not for Resale

American National Standard

An American National Standard implies a consensus of those substantially concerned with its scope and provisions. An American National Standard is intended as a guide to aid the manufacturer, the consumer, and the general public. The existence of an American National Standard does not in any respect preclude anyone, whether he has approved the standard or not, from manufacturing, marketing, purchasing, or using products, processes, or procedures not conforming to the standard. American National Standards are subject to periodic review and users are cautioned to obtain the latest editions.

CAUTION NOTICE: This American National Standard may be revised or withdrawn at any time. The procedures of the American National Standards Institute require that action be taken to reaffirm, revise, or withdraw this standard no later than five years from the date of publication. Purchasers of American National Standards may receive current information on all standards by calling or writing the American National Standards Institute.

Copyright The Institute of Electrical and Electronics Engineers, Inc.
Provided by IHS under license with IEEE
No reproduction or networking permitted without license from IHS
Not for Resale

Foreword

(This Foreword is not a part of ANSI C63.13-1991, American National Standard Guide on the Application and Evaluation of EMI Power-Line Filters for Commercial Use, but is included for information only.)

Many individuals have expressed the need for a document that provides a guide to the basic understanding of EMI power-line filters.

This guide is intended to assist users and designers of electronic equipment in the proper design, construction, installation, and evaluation of power-line filters. Safety considerations are also discussed.

At the time this standard was approved, the working group that prepared this standard had the following membership:

Stephen D. Bloom, *Chair*
Alphonse A. Toppeto

At the time that Accredited Standards Committee C63 approved this standard, Subcommittee One had the following membership:

Donald N. Heirman, *Chair*

James H. Allen	Thomas Gardner	Herbert K. Mertel
Wallace E. Amos	Frank E. Garlington	Walter A. Poggi
Dante Anoia	Harold A. Gauper, Jr.	William T. Rhoades
Stephen D. Bloom	William K. Hayes	Paul Ruggera
Edwin L. Bronaugh	James S. Hill	Terence Rybak
W. F. Bryant	H. R. Hofmann	Richard B. Schulz
Joseph E. Butler, Jr.	Keith Kalanquin	David A. Segerson
Stephen Caine	Albert R. Kall	Neal H. Sheperd
Edward W. Chapin	T. W. Kern	Ralph M. Showers
Dave Cofield	Warren A. Kesselman	Louis Slesin
Louis B. Costello	James C. Klouda	Albert A. Smith, Jr.
Myron L. Crawford	Eugene D. Knowles	Dave Staggs
Glen Dash	Nestor Kolcio	Leonard W. Thomas, Sr.
Hector Davis	William S. Lambdin	Eb M. Tingley
Robert H. Davis	Al R. Lavis	Alphonse A. Toppeto
Bill Devey	John Lichtig	Anatoly Tsaliovich
Dennis Dzierzawski	Siegfried Linkwitz	Art Wall
Fred Friedman	Richard Massey	Stan Xavier

At the time that the Accredited Standards Committee on Electromagnetic Compatibility, C63, approved this standard, it had the following membership:

Ralph M. Showers, *Chair* **Edwin L. Bronaugh,** *Vice Chair*

Susan L. Vogel, *Secretary*

Organization Represented	*Name of Representative*
Aeronautical Radio, Inc.	Kendall Simmons
Amador Corporation	Dan Hoolihan
	James Johnson
American Council of Independent Laboratories	William K. Hayes
Association of American Railroads	Chris Allman
Association of Telecommunications Attorneys	Jon Curtis
	Glen Dash
AT&T Bell Laboratories	H. R. Hofmann
Canadian Standards Association	F. Diamente
Computer and Business Equipment Manufacturing Association	Ralph Calcavecchio
	William F. Hanrahan
Electric Light and Power Group	Merrill Brimhall
	William Logan
	Matthew C. Mingoia
Electronic Industries Association	George Hanover
	Eric Schimmel

Copyright The Institute of Electrical and Electronics Engineers, Inc.
Provided by IHS under license with IEEE
No reproduction or networking permitted without license from IHS
Not for Resale

Exchange Carriers Standards Association	O. J. Gusella, Jr.
	John Lichtig
	Michael Parente
Federal Communications Commission	Richard Fabina
	Art Wall
Food and Drug Administration	Paul Ruggera
	Jeffrey Silberberg
GTE Service Corporation	Joe Villanueva
Institute of Electrical and Electronics Engineers, Inc.	Edwin L. Bronaugh
	Donald N. Heirman
	Nestor Kolcio
Motor Vehicle Manufacturers Association	Terence Rybak
National Association of Broadcasters	Michael C. Rau
	Kelly Williams
National Electrical Manufacturers Association	Ronald Harrold
	Stephen Hopper
National Institute of Standards and Technology	Myron Crawford
National Telecommunications and Information Administration	Karl Nebbia
Personal Computer	Bill Wong
Radio Technical Committee for Aeronautics	Keith Kalanquin
Scientific Apparatus Makers Association	Ray Magnuson
	Lou Shulman
Society of Automotive Engineers	Frederick Bauer
	Herbert Mertel
Underwriters Laboratories	Wolf Josenhans
	Willard Tuthill
Unisys	Wallace Amos
U.S. Air Force	Charles Seth
U.S. Department of Agriculture, Rural Electrification Administration	Dante Anoia
U.S. Department of Energy — Bonneville Power Administration	Vernon L. Chartier
U.S. Department of Energy — Western Area Power Administration	Pete Hanson
U.S. Department of the Army, Communications Electronic Command	David Cofield
U.S. Department of the Navy, Naval Electronic System Naval Command	Stephen Caine
U.S. Department of Transportation — Federal Aviation Administration	Robert Frazier
Members-at-Large	Louis Slesin
	Herman Garlan
	Harold Gauper
	L. Robert Glenn
	Leonard Milton
	Richard Schulz
	Ralph M. Showers
	Chester L. Smith
	Leonard W. Thomas, Sr.

Copyright The Institute of Electrical and Electronics Engineers, Inc.
Provided by IHS under license with IEEE
No reproduction or networking permitted without license from IHS
Not for Resale

Contents

SECTION PAGE

1. Scope 7
2. Definitions 7
3. EMI Power-Line Filters 7
4. Application of EMI Power-Line Filters 8
5. Propagation of Conducted Disturbances 9
6. Operation of an EMI Power-Line Filter 9
7. Understanding the Components of an EMI Power-Line Filter 11
8. Why Similar EMI Power-Line Filters May Not Perform in the Same Way 11
9. No-Load, 50 Ω, Insertion-Loss Test Methods 12
10. Installation of an EMI Power-Line Filter 14
11. Safety Regulations 14
12. Bibliography 14

FIGURES

Fig 1 An EMI Power-Line Filter Circuit Diagram 8
Fig 2 Common-Mode and Differential-Mode Noise Currents 9
Fig 3 Phasor Diagram of Noise Currents 9
Fig 4 Common-Mode Noise Equivalent Circuit 10
Fig 5 Differential-Mode Noise Equivalent Circuit 10
Fig 6 Common-Core Inductor 11
Fig 7 CM Insertion-Loss Measurement 13
Fig 8 DM Insertion-Loss Measurement 13

Copyright The Institute of Electrical and Electronics Engineers, Inc.
Provided by IHS under license with IEEE
No reproduction or networking permitted without license from IHS
Not for Resale

American National Standard Guide on the Application and Evaluation of EMI Power-Line Filters for Commercial Use

1. Scope

This guide is intended to provide a basic understanding of the application, evaluation, and safety considerations of electromagnetic interference (EMI) power-line filters used in both ac and dc applications.

It includes a basic description of the construction of an EMI power-line filter and its functions in providing suppression of conducted noise. In addition, it provides explanations of why seemingly identical filters may not give the same performance in a particular application.

Finally, proper installation of these filters in equipment is discussed.

2. Definitions

bulkhead mounting (of a filter). Installation in which the metallic case of the filter is bolted directly to a metallic bulkhead that is at reference or ground potential.

common-mode interference. Interference that appears between both signal leads and a common reference plane (ground) and causes the potential of both sides of the transmission path to be changed simultaneously and by the same amount relative to the common reference plane (ground).

differential-mode interference. Interference that causes the potential of one side of the signal transmission path to be changed relative to the other side. *Note:* That type of interference in which the interference current path is wholly in the signal transmission path.

low-pass filter. A filter having a single transmission band extending from zero to some cutoff frequency, not infinite.

mixed-mode interference. Interference that consists of components from both common- and differential-mode interference.

potting (encapsulation). The sealing of components and associated conductors in a filter assembly with an insulating, thermally conductive material to exclude contaminants.

power frequency. The value of frequency used in the electrical power system, such as 50 Hz or 60 Hz.

radiated noise. Electromagnetic interference that is radiated into the environment, either directly from equipment or from the power cord or any other cabling connected to it.

radio frequency (rf). A frequency in the portion of the electromagnetic spectrum that is between the audio frequency portion and the infrared portion.

3. EMI Power-Line Filters

An EMI power-line filter is a low-pass filter designed for connection in series with the power line in order to reduce or eliminate

Copyright The Institute of Electrical and Electronics Engineers, Inc.
Provided by IHS under license with IEEE
No reproduction or networking permitted without license from IHS
Not for Resale

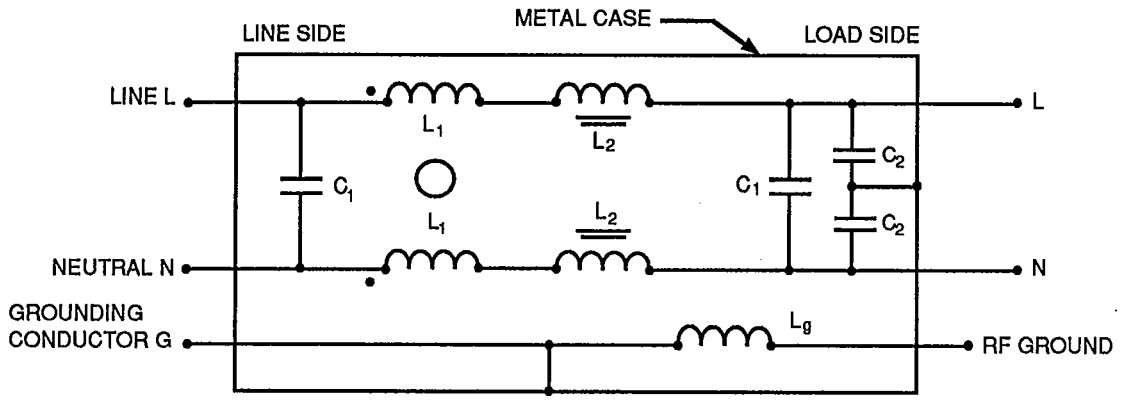

C_1 = Line-to-line capacitors
C_2 = Line-to-ground capacitors
L_1 = Common-core inductors
L_2 = Independent inductors
L_g = Ground choke

NOTES: (1) If the case of the filter is nonmetallic, ground connections requiring earth reference shall be made to the system grounding conductor.
(2) If the case of the filter is metallic, the ground leads should be bonded to the filter case.
(3) When used, the optional ground choke (L_g) provides a high impedance to rf ground separate from the very low impedance to ac power ground.

Fig 1
An EMI Power-Line Filter Circuit Diagram

disturbances appearing on one side of the filter from appearing on the other side, and which does not significantly reduce line frequency power through it. Typically, an EMI power-line filter consists of series inductors and shunt capacitors. Lossy ferromagnetic materials may be used in the inductors.

Inductors may take two forms. The most common form is a single magnetic core structure wound with two coupled windings, one connected in the line conductor and the other in the neutral conductor. In the other form independent, single-winding inductors are used in either or both lines.

In the case of multiphase or split-phase filters, the coupled inductors have identical windings, one for each power-carrying line. Similarly, the independent inductors would appear in each of these lines. For clarity, principles will be discussed with reference to single-phase filters in this document.

A representative EMI power-line filter circuit for use on power lines operating at up to 400 Hz is shown in Fig 1.

4. Application of EMI Power-Line Filters

An EMI power-line filter is usually installed directly at the power entry point of a piece of equipment either to suppress conducted emissions that would otherwise pass from the equipment into the power distribution system, or to suppress noise that is entering the equipment from the power line.

Since electronic equipment today is most likely to be powered by switched-mode power supplies operating at switching frequencies from about 20 kHz to hundreds of kHz, the potential for coupling disturbances at these frequencies to the power line is very great.

Although often used primarily for controlling conducted disturbances, a filter also suppresses local disturbing fields radiated from the power line, which may act as an antenna. Most filters have performance characteristics specified up to 30 MHz. However, a filter typically will continue to suppress noise at higher frequencies.

Copyright The Institute of Electrical and Electronics Engineers, Inc.
Provided by IHS under license with IEEE
No reproduction or networking permitted without license from IHS
Not for Resale

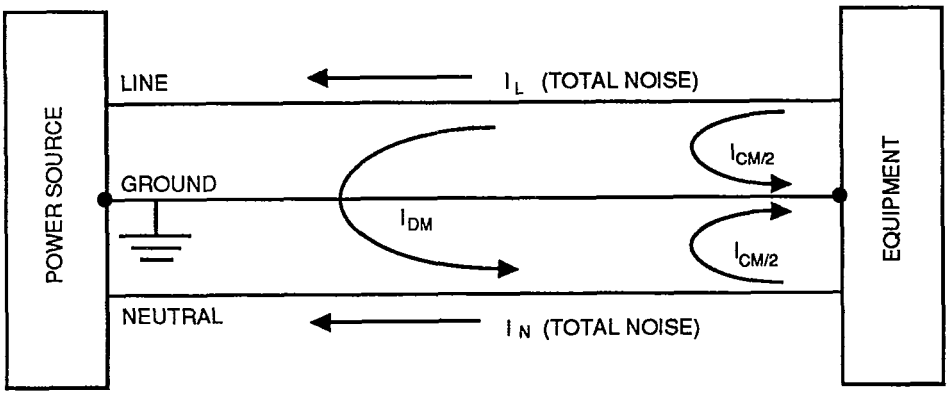

Fig 2
Common-Mode and Differential-Mode Noise Currents

5. Propagation of Conducted Disturbances

Conducted disturbances appearing on a circuit consisting of two conductors may be resolved into two components, common (asymmetrical) and differential (symmetrical) modes. An understanding of these modes will assist in analyzing the performance of an EMI power-line filter.

Figure 2 shows the two noise modes in terms of their currents. The common-mode currents, $I_{CM/2}$, are identical at any one frequency in both amplitude and phase. The differential-mode current, I_{DM}, is a single current in the loop consisting of the two power lines.

$$I_{CM} = I_L + I_N$$
$$I_{DM} = (I_L - I_N)/2$$

From this simple illustration, several conclusions about the character of conducted electromagnetic noise can be drawn. The common-mode noise currents are the same in both lines with their return path being the ground connection. The differential-mode noise current does not flow in the ground connection. At any one noise frequency, the total noise current in one of the lines can be expected to be larger than that in the other line, depending on the amplitude and phase of the component noise currents at that frequency. As shown in Fig 3, the total noise current in one line is one-half of the phasor sum of the common- and differential-mode noise currents; whereas, in the other line, it is one-half their difference. This explains why conducted noise measurements must be made on each line rather than on only one.

6. Operation of an EMI Power-Line Filter

The basic functions of an EMI power-line filter in suppressing noise currents can now be deduced by referring to Figs 1 and 2.

Consider common-mode suppression first. Since the common-mode currents are identical in both lines with respect to ground, the line-to-line capacitors, C_1, will have no effect. The common-core inductors, L_1, are wound with identical windings having the polarity shown in Fig 1. The reason for this type of winding is to minimize the size of the core necessary to avoid magnetic saturation by the differential power currents while providing relatively large values of inductance.

Fig 3
Phasor Diagram of Noise Currents

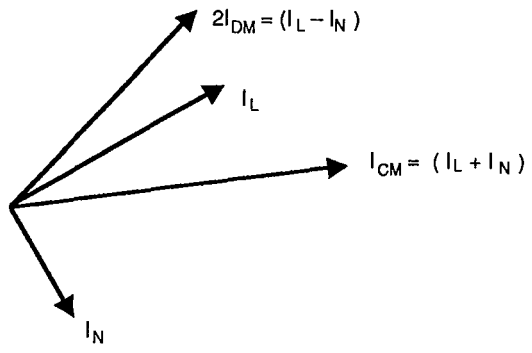

Copyright The Institute of Electrical and Electronics Engineers, Inc.
Provided by IHS under license with IEEE
No reproduction or networking permitted without license from IHS

Not for Resale

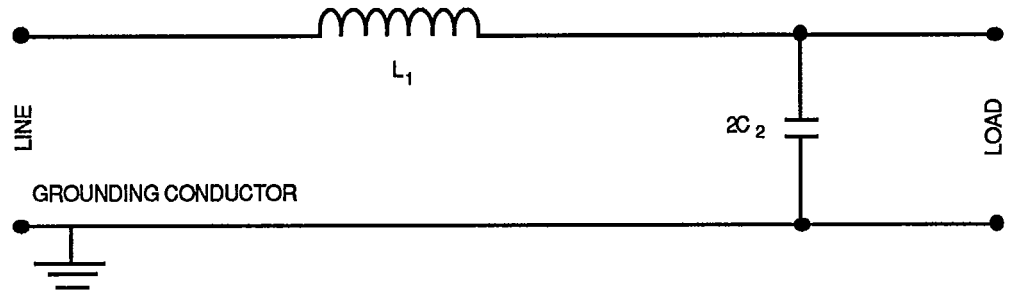

Fig 4
Common-Mode Noise Equivalent Circuit

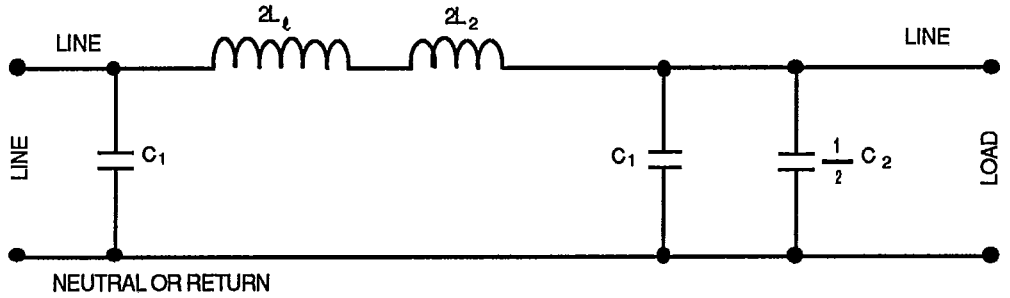

Fig 5
Differential-Mode Noise Equivalent Circuit

Finally, it is clear that the line-to-ground capacitors will be effective against common-mode noise. These capacitors being connected to ground are limited by safety regulations to be very small in value compared to the line-to-line capacitors. Therefore, the equivalent common-mode circuit of the filter in Fig 1 is that shown in Fig 4, where L_2 inductors are neglected in comparison to L_1.

The two independent inductors, L_2, will also attenuate common-mode noise. However, since each of these inductors is separately energized by the power frequency current, which is much higher than the noise currents, their value is much less than L_1 in order to prevent core saturation at the rated current of the filter.

In Figure 4, the equivalent value of line-to-ground capacitance is $2C_2$ because these capacitors are in parallel for this noise mode. The equivalent inductance is approximately L_1 rather than $2L_1$, however, because of the common core nature of these coils.

The equivalent differential-mode circuit for the filter of Fig 1 may be determined in a similar manner. The line-to-line capacitors are clearly effective against such noise, and the independent inductors, L_2, are also active in this case. However, the coupled inductors, L_1, are not effective per se because of their polarity, which causes them to cancel around the power loop in which the differential-mode current flows. The series combination of the line-to-ground capacitors also provides a path for differential-mode current, but again they are very small with respect to the line-to-line capacitors. Their effect at high frequencies can be significant; so, they are included in Fig 5 along with the leakage inductances, L_ℓ, of the two L_1's, which do not cancel because they are not coupled.

Copyright The Institute of Electrical and Electronics Engineers, Inc.
Provided by IHS under license with IEEE
No reproduction or networking permitted without license from IHS

Not for Resale

7. Understanding the Components of an EMI Power-Line Filter

Line-to-line capacitors are usually of the metallized film or film/foil structure. Such capacitors have a relatively high capacitance, e.g., 0.1 μF to 2.0 μF, along with high reliability. These capacitors typically have a self-resonant frequency of the order of 1 or 2 MHz. Therefore, they are most effective against lower frequency differential-mode noise.

Line-to-ground capacitors, as mentioned earlier, must have a very low capacitance for safety reasons. Such capacitors are usually in the range of 0.001 to 0.01 μF, for example. For this reason, they are most effective against higher frequency common-mode noise. Their structure is often of the ceramic type because of the superior high self-resonant frequency of ceramic capacitors when compared to wound film capacitors. Ceramic capacitors with very short leads will resonate at 50 MHz or more, depending on their geometry. Film-type capacitors, even with short leads, will resonate at frequencies of the order of 10 MHz.

Any capacitor at frequencies higher than its self-resonant frequency behaves as an inductor and is, therefore, no longer effective as an EMI power-line filter component. This fact is important in selecting the type of capacitor and its method of assembly into the filter.

Similarly, inductors are not purely inductive. The windings by their very nature will be shunted by distributed capacitance. Therefore, inductors too suffer from self-resonant characteristics. Above their self-resonant frequency, the capacitance dominates so that inductors lose their effectiveness at higher frequencies. Depending on the value of the inductance, the geometry of the windings, and the core material, coil self-resonance typically may occur in the range of 150 kHz to 2 MHz.

It is quite clear that the design of independent inductors such as L_2 in Fig 1 must take into account the saturation characteristics of the core material due to the current rating of the filter and the turns required on that core to achieve the desired inductance. Otherwise, the core would be saturated under normal operating conditions and would be ineffective as a filter component.

It is not so clear, however, that saturation is a very important consideration in the design of common-core inductors. The two windings

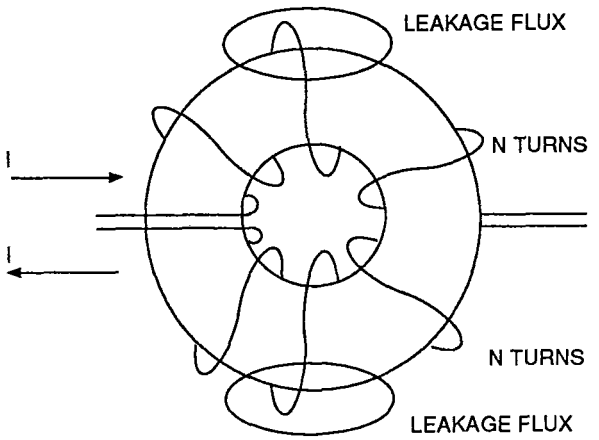

Fig 6
Common-Core Inductor

of such a component are designed with an equal number of turns so that the magnetomotive force around the core due to the power frequency current in these windings cancels. In Fig 6, it may be seen that the net magnetomotive force around the core is zero because of the cancellation of the ampere-turns (NI) associated with each winding. Therefore, if one stops at this point, one will conclude that such a coil structure will never saturate. This is not the case, however, because of leakage flux, which is not coupled from one winding to another. These independent fluxes can cause the core material to saturate in the regions where they exist. This saturation, even though it is localized, will have the same effect as the introduction of a large air gap in the core. That is, the inductance of the windings will decrease dramatically.

An EMI power-line filter will most often contain a bleeder resistor to discharge the line-to-line capacitors when power is disrupted. It has no effect on filter performance.

If a ground choke is included in the filter, it will contribute to suppression of common-mode noise, not differential-mode noise.

8. Why Similar EMI Power-Line Filters May Not Perform in the Same Way

At this point, several reasons why two supposedly identical filters from two different manufacturers can be expected to perform differently in the same application become apparent.

Copyright The Institute of Electrical and Electronics Engineers, Inc.
Provided by IHS under license with IEEE
No reproduction or networking permitted without license from IHS
Not for Resale

Inductance and capacitance value measurements are normally made at very low values of voltage, current, and frequency using a bridge instrument. The usual measurement frequency is 1 kHz whereas the frequency range over which performance is evaluated in an application is up to and above 30 MHz. Therefore, no information as to the self-resonant frequency of the components is noted.

In the case of inductors, no information about the current at which the inductors, both common core and independent core, will saturate has been gained by the low current measurements. Therefore, depending on the peak currents through the filters in a particular application, the cores in one may saturate before those in the other, rendering the one with saturated cores ineffective.

Other, more subtle differences between two supposedly identical filters exist and cause significant differences in their performance. These effects are parasitic in nature and are not detected by the usual element value measurements. There is capacitance within the coil winding, the distributed capacitance, which determines the self-resonant frequency of the coils. The self-resonant frequency of the capacitive branches is not found in the low-frequency measurements.

The foregoing examples have been implied in previous sections of this document; however, there are others.

Core losses of the magnetic pieceparts used in a filter are significant in the neighborhood of coil self-resonance. Higher core losses at this frequency will decrease the attenuation of the filter in an application in the vicinity of coil resonance; the variation of inductance versus frequency also has not been noted.

Above coil self-resonance, the distributed capacitance of the coil forms a capacitive divider with the line-to-ground capacitors. The higher the value of the distributed capacitance, the lower the attenuation of the filter will be.

Other parasitic, capacitive coupling will exist between coils and other coils, between coils and capacitors, and between input and output capacitors. These parasitic capacitances all serve to degrade performance of the filter.

Most filters are potted in order to stabilize the mechanical positions of the components and to provide better thermal conductivity for heat dissipation. Since the potting material must be an insulator, all parasitic capacitances are increased by the dielectric properties of the particular material.

Magnetic couplings also exist to reduce filter performance. Transformer coupling arises between the input and output terminals of a filter as a function of conductor routings within the filter. Magnetic coupling will also exist between the coil structures and the metallic enclosures of the filter.

In summary, many parasitic parameters exist in any filter that are not easily determined by measurements. All of these, plus the properties of the materials in the components, will very likely make two apparently identical filters behave differently in any given application.

Finally, it must be remembered that insertion-loss data on filters are most often obtained from tests in a 50 Ω system. Since the impedance presented to the filter at its load terminals in a particular application is unlikely to be 50 Ω over the entire frequency range, and since it likely is not purely resistive, the 50 Ω system data are not applicable. Even at the line terminals of the filter, the impedance is usually lower than 50 Ω below 1 MHz. For these reasons, two different filters with identical insertion loss data may perform differently in a given application.

A filter with inferior insertion loss compared to another filter may perform better in a particular application because of its network configuration. The effectiveness of a filter in an application depends to a great extent on the mismatches between the filter impedance and the input impedance that the equipment presents to the filter load terminals. For example, if the input impedance is capacitive, a filter with an inductive element at its load side will generally be more effective than one with a line-to-line capacitor. Therefore, the best test of the effectiveness of a filter is an actual test in the equipment.

9. No-Load, 50 Ω, Insertion-Loss Test Methods

A test circuit used to measure common-mode insertion loss in a 50 Ω system is shown in Fig 7. For this mode, the line and neutral

Copyright The Institute of Electrical and Electronics Engineers, Inc.
Provided by IHS under license with IEEE
No reproduction or networking permitted without license from IHS

Not for Resale

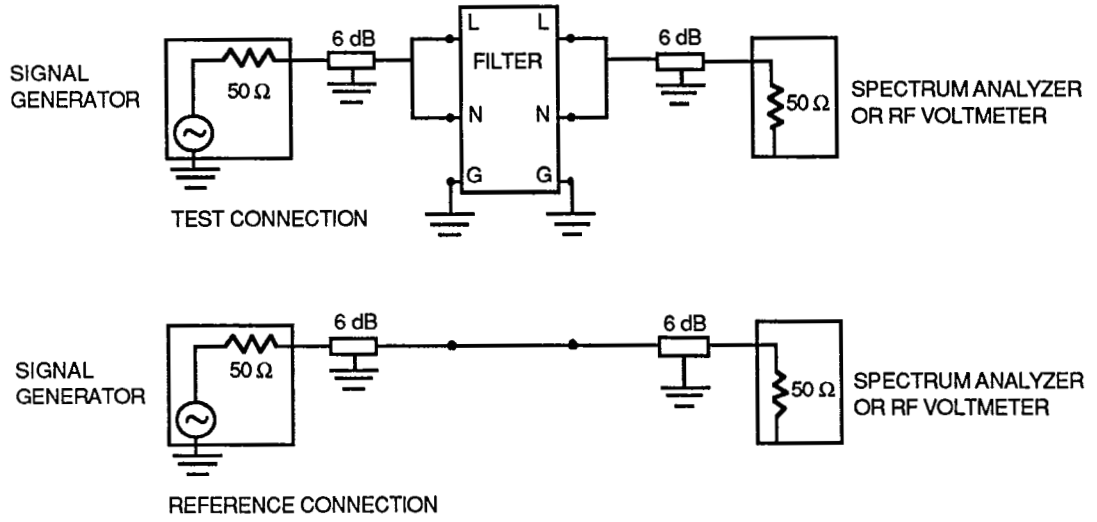

Fig 7
CM Insertion-Loss Measurement

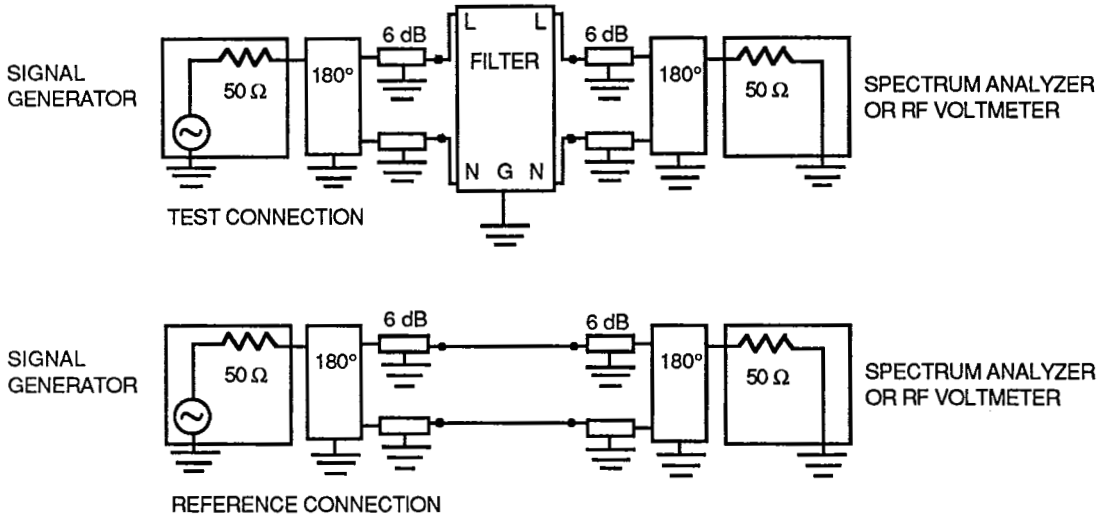

Fig 8
DM Insertion-Loss Measurement

terminals are at the same potential with respect to ground. Therefore, the test method connects these terminals in parallel. The insertion loss is measured with respect to a reference established by substituting a direct connection for the filter as is also shown in Fig 7.[1]

For differential-mode insertion loss, a test circuit is that shown in Fig 8. In this mode, the signals on the line and neutral terminals are the same in magnitude but opposite in phase. Therefore, the test circuit uses 50 Ω, 180° splitter/combiners. Again, the reference for insertion loss is determined by substituting a direct connection for the filter. Detailed test methods are given in reference [B3].[2]

[1]All signal leads are 50 Ω coaxial cables. The input and output leads must be well separated in order to avoid coupling around the filter. Detailed test methods are given in reference [B3] (see bibliography in Section 12).

[2]See Section 12.

Copyright The Institute of Electrical and Electronics Engineers, Inc.
Provided by IHS under license with IEEE
No reproduction or networking permitted without license from IHS

Not for Resale

10. Installation of an EMI Power-Line Filter

Finally, some cautions about the installation of an EMI power-line filter in equipment are appropriate.

The preferred installation is to use a bulkhead (metallic) mounted filter with an integral power connector so that the equipment enclosure together with the filter enclosure form a complete EMI shield around the equipment.

Next best is an installation wherein the filter is mounted within the equipment on a metallic chassis very close to the power input lines and is connected to them with very short conductors. The output leads from the filter must be routed so that there is very little coupling from them, around the filter, back to the input conductors. That is, coupling from any conductor within the equipment on the output side of the filter to the input leads of the filter must be minimized.

By extrapolation of the above descriptions, any installation that does not use a bulkhead (metallic) mounted filter or that does not minimize coupling around the filter makes poor use of the filter.

The mounting means of the filter must supply both a good safety connection to power system ground potential and to the rf ground of the equipment so that the line-to-ground capacitors are most effective.

If the equipment enclosure is a nonconductive plastic housing, the design engineer must provide a very low impedance connection between the equipment ground and the power system ground connection (green/yellow) wire.

11. Safety Regulations

Because EMI power-line filters are connected in the power line and may even be accessible to the user of the equipment, safety agencies throughout the world have stringent regulations (see Section 12) on these devices. Although the purpose of these regulations is the same in all countries, the precise limitations for safety approvals in different nations will vary. The safety requirements on end products may also affect installation of a line filter. End product requirements should be consulted.

The usual attributes of a filter that are controlled by safety agencies include the following, among others, as a function of the agency involved:

- Leakage current to ground
- Voltage withstand, both line-to-line and line-to-ground
- Short-circuit current ratings, line-to-line, line-to-neutral and line-to-ground
- Temperature rise at rated current and upper rated ambient temperature
- Creepage and clearance distances
- Long-term reliability (for safety) of components
- Reliability of components under adverse environmental conditions, usually high temperature and humidity
- Class of insulation both within filter components and filter assembly
- Flammability

Since the regulations vary from nation to nation, the designer of any equipment using a filter, either purchased or built in-house, must be aware of the requirements in the applicable marketing areas. In order to facilitate the approval of equipment, filter manufacturers will have obtained the most commonly required approvals of their standard filters. Those most often required are UL (USA), CSA (Canada), VDE or TUV (West Germany), and SEV (Switzerland).

12. Bibliography

When the standards among the following bibliographical references are superseded by an approved revision, the revision shall apply.

[B1] ANSI/EIA 197A-1973, Standard for Power Filter Inductors for Electronic Equipment.

[B2] ANSI/EIA 416-1974, Standard for Radio Interference Filters.

[B3] CISPR Publication 17 (1981), Methods of Measurement of the Suppression Characteristics of Passive Radio Interference Filters and Suppression Components.

[B4] CSA C22.2 no. 8-M1986, Electromagnetic Interference (EMI) Filters.

Copyright The Institute of Electrical and Electronics Engineers, Inc.
Provided by IHS under license with IEEE
No reproduction or networking permitted without license from IHS

Not for Resale

[B5] IEC 938, Fixed Inductors for Radio Interference Suppression. 938-1 (1988) Part 1: Generic Specification. 938-2 (1988) Part 2: Sectional Specification. Selection of Methods of Test and General Requirements.

[B6] IEC 950 (1986), Safety of Information Technology Equipment Including Electrical Business Equipment.

[B7] IEEE Std 518-1982 (Reaff 1990), IEEE Guide for the Installation of Electrical Equipment to Minimize Noise Inputs to Controllers from External Sources (ANSI).

[B8] IEEE Std 368-1977, Measurement of Electrical Noise and Harmonic Filter Performance of High-Voltage, Direct-Current Systems.

[B9] MIL-STD-220A, Method of Insertion Loss Measurement.

[B10] SEV 1055-1978, Regulatory Specifications for Interference Capacitors.

[B11] UL 498-1986, The Standard for Attachment Plugs and Receptacles (Revised 11/90).

[B12] UL 1012-1989, The Standard for Power Supplies (Revised 4/90).

[B13] UL 1283-1984, The Standard for Electromagnetic Interference Filters (Revised 10/89).

[B14] UL 1459-1987, The Standard for Telephone Equipment (Revised 6/90).

[B15] VDE 0565, Part 3/9.81, Radio Frequency Interference Suppression Devices, Part 3: RFI Filters.

[B16] Jarvis, M. L. and J. M. Thomson. "Worst Case Suppressor Testing Method — The Minimum Attenuation Concept. *IEEE Transactions on Electromagnetic Compatibility,* vol. 19, May 1977, pp. 99–100.

[B17] Schlicke, H. M. "Assuredly Effective Filters." *IEEE Transactions on Electromagnetic Compatibility,* vol. 18, Aug. 1976, pp. 106–110.

[B18] Schlicke, H. M. "Comments." *IEEE Transactions on Electromagnetic Compatibility,* vol. 19, May 1977, pp. 100–101.

Copyright The Institute of Electrical and Electronics Engineers, Inc.
Provided by IHS under license with IEEE
No reproduction or networking permitted without license from IHS

Not for Resale