Recognized as an
American National Standard (ANSI)

IEEE Std C62.92.5-1992(R2001)

IEEE Guide for the Application of Neutral Grounding in Electrical Utility Systems, Part V—Transmission Systems and Subtransmission Systems

Sponsor
Surge-Protective Devices Committee
of the
IEEE Power Engineering Society

Approved June 18, 1992
Reaffirmed December 6, 2001
IEEE Standards Board

Approved December 8, 1992
American National Standards Institute

Abstract: Basic factors and general considerations in selecting the class and means of neutral grounding for a particular ac transmission or subtransmission system are covered. An apparatus to be used to achieve the desired grounding is suggested, and methods for specifying the grounding devices are given. Transformer tertiary systems, equipment-neutral grounding, and the effects of series compensation on grounding are discussed.
Keywords: electrical utility systems, equipment neutral grounding, grounding, neutral grounding, subtransmission systems, transformer tertiary systems, transmission systems, series compensation

The Institute of Electrical and Electronics Engineers, Inc.
345 East 47th Steet New York, NY 10017-2394, USA
Copyright © 1993 by the
Institute of Electrical and Electronics Engineers, Inc.
All rights reserved. Published 1993
Printed in the United States of America
ISBN 1-55937-244-3
No part of this publication may be reproduced in any form, in an electronic retrieval system or otherwise, without the prior written permission of the publisher.

Copyright The Institute of Electrical and Electronics Engineers, Inc.
Provided by IHS under license with IEEE
No reproduction or networking permitted without license from IHS
Not for Resale

IEEE Standards documents are developed within the Technical Committees of the IEEE Societies and the Standards Coordinating Committees of the IEEE Standards Board. Members of the committees serve voluntarily and without compensation. They are not necessarily members of the Institute. The standards developed within IEEE represent a consensus of the broad expertise on the subject within the Institute as well as those activities outside of IEEE that have expressed an interest in participating in the development of the standard.

Use of an IEEE Standard is wholly voluntary. The existence of an IEEE Standard does not imply that there are no other ways to produce, test, measure, purchase, market, or provide other goods and services related to the scope of the IEEE Standard. Furthermore, the viewpoint expressed at the time a standard is approved and issued is subject to change brought about through developments in the state of the art and comments received from users of the standard. Every IEEE Standard is subjected to review at least every five years for revision or reaffirmation. When a document is more than five years old and has not been reaffirmed, it is reasonable to conclude that its contents, although still of some value, do not wholly reflect the present state of the art. Users are cautioned to check to determine that they have the latest edition of any IEEE Standard.

Comments for revision of IEEE Standards are welcome from any interested party, regardless of membership affiliation with IEEE. Suggestions for changes in documents should be in the form of a proposed change of text, together with appropriate supporting comments.

Interpretations: Occasionally questions may arise regarding the meaning of portions of standards as they relate to specific applications. When the need for interpretations is brought to the attention of IEEE, the Institute will initiate action to prepare appropriate responses. Since IEEE Standards represent a consensus of all concerned interests, it is important to ensure that any interpretation has also received the concurrence of a balance of interests. For this reason IEEE and the members of its technical committees are not able to provide an instant response to interpretation requests except in those cases where the matter has previously received formal consideration.

Comments on standards and requests for interpretations should be addressed to:

Secretary, IEEE Standards Board
445 Hoes Lane
P.O. Box 1331
Piscataway, NJ 08855-1331
USA

IEEE Standards documents are adopted by the Institute of Electrical and Electronics Engineers without regard to whether their adoption may involve patents on articles, materials, or processes. Such adoption does not assume any liability to any patent owner, nor does it assume any obligation whatever to parties adopting the standards documents.

Copyright The Institute of Electrical and Electronics Engineers, Inc.
Provided by IHS under license with IEEE
No reproduction or networking permitted without license from IHS
Not for Resale

Foreword

(This foreword is not a part of IEEE Std C62.92.5-1992, IEEE Guide for the Application of Neutral Grounding in Electrical Utility Systems, Part V—Transmission Systems and Subtransmission Systems.)

This guide is a part of a series on neutral grounding in electrical utility systems. When the series of documents are approved and published, they will replace IEEE Std 143-1954, IEEE Guide for Ground-Fault Neutralizers, Grounding of Synchronous Generator Systems, and Neutral Grounding of Transmission Systems. In the new series of documents, individual considerations and practices have been given to the grounding of synchronous generator systems, generator-station auxiliary systems, and distribution systems.

IEEE Std 143-1954 is a revision of AIEE No. 954, October 1954, which was a compilation of the following three AIEE Transaction papers:

— AIEE Committee Guide Report, "Application of Ground-Fault Neutralizers," *AIEE Transactions (Power Apparatus and Systems)*, vol. 72, pt. III, pp. 183–190, April 1953.
— AIEE Committee Report, "Application Guide for the Grounding of Synchronous Generator Systems," *AIEE Transactions (Power Apparatus and Systems)*, vol. 72, pt. III, pp. 517–530, June 1953.
— AIEE Committee Report, "Application Guide on Methods of Neutral Grounding of Transmission Systems," *AIEE Transactions (Power Apparatus and Systems)*, vol. 72, pt. III, pp. 663–668, June 1953.

The contents of Parts I–V of the revision of IEEE Std 143-1954 are based on the foregoing documents but are amplified and updated with new material from the IEEE tutorial course "Surge Protection in Power Systems" (79H0144-6-PWR) and other sources.

In Parts I through V of this series, emphasis is on power system grounding practices as contrasted with the grounding, for example, of industrial systems, which is covered in other guides and standards. These guides and standards should be referenced, when appropriate, to gain a full picture of other grounding practices.

It is impossible to give recognition to all those who have contributed to the technology and practices of grounding of power systems, since work involving the preparation of this guide has been in progress for over 30 years. However, the assistance of members, past and present, of the Neutral Grounding Devices Subcommittee of the Surge-Protective Devices Committee, and other similar groups with comparable purposes, should be acknowledged.

Disclaimer

This guide is specifically written for electrical utility systems and does not recognize the neutral grounding requirements for dispersed storage and generation. These requirements must recognize the restrictions imposed by the specific network to which the dispersed storage or generation is connected. Neutral grounding of dispersed storage and generation needs to be coordinated with the electrical utility system.

At the time this guide was approved, the Working Group for Part V of the Neutral Grounding Devices Subcommittee had the following membership:

Edgar R. Taylor, Jr., *Chair*

Charles Ballentine
Simon H. Cheng
Douglas C. Dawson
George S. Haralampu
Hieu Huynh
Gerald E. Lee
R. Dan Melchior
Subinoy Mazumdar
W. R. Ossman
J. W. Wilson, Jr.

Copyright The Institute of Electrical and Electronics Engineers, Inc.
Provided by IHS under license with IEEE
No reproduction or networking permitted without license from IHS
Not for Resale

The following persons were members of the balloting group that approved this document for submission to the IEEE Standards Board:

C. L. Ballentine
S. Cheng
J. G. Dalton
D. C. Dawson
G. L. Gaibrois
A. R. Hileman
D. W. Jackson
G. S. Haralampu
J. A. Hetrick
R. A. Jones
S. S. Kershaw
J. L. Koepfinger
G. E. Lee
B. Leuenberger
W. A. Maguire
D. A. Mark
R. Odenberg
J. C. Osterhout
M. Parente
E. C. Sakshaug
K. B. Stump
A. Sweetana
E. R. Taylor, Jr.
R. Thallam
S. G. Whisenant

The Accredited Standards Committee on Surge Arresters, C62, that reviewed and approved this document, had the following members at the time of approval:

Joseph L. Koepfinger, *Chair* **John A. Gauthier,** *Secretary*

Organization Represented	*Name of Representative*
Association of American Railroads	Wayne Etter
Canadian Standards Association	D. M. Smith
Bonneville Power Administration	G. E. Lee
Electric Light and Power	R. A. Jones H. E. Foelker W. A. Maguire J. W. Wilson M. C. Mingoia (*Alt.*)
Exchange Carriers Standards Association	Michael Parente
Institute of Electrical and Electronics Engineers	J. L. Koepfinger J. J. Burke G. L. Gaibrois W. H. Kapp S. S. Kershaw, Jr. C. Hansell (*Alt.*) Edgar Taylor (*Alt.*)
National Electrical Manufacturers Association	Dennis W. Lenk Basil Dillon-Malone Bernhard Wolff D. Worden Larry Bock (*Alt.*)
Members-at-Large	Peter Goodwin F. D. Martzloff J. Osterhout B. Panesar
Rural Electrification Administration	George J. Bagnall
Underwriters Laboratories	P. Notarian Larry Williams (*Alt.*)

Copyright The Institute of Electrical and Electronics Engineers, Inc.
Provided by IHS under license with IEEE
No reproduction or networking permitted without license from IHS
Not for Resale

When the IEEE Standards Board approved this standard on June 18, 1992, it had the following membership:

Marco W. Migliaro, *Chair* **Donald C. Loughry,** *Vice Chair*
Andrew G. Salem, *Secretary*

Dennis Bodson
Paul L. Borrill
Clyde Camp
Donald C. Fleckenstein
Jay Forster*
David F. Franklin
Ramiro Garcia
Thomas L. Hannan
Donald N. Heirman
Ben C. Johnson
Walter J. Karplus
Ivor N. Knight
Joseph Koepfinger*
Irving Kolodny
D. N. "Jim" Logothetis
Lawrence V. McCall
T. Don Michael*
John L. Rankine
Wallace S. Read
Ronald H. Reimer
Gary S. Robinson
Martin V. Schneider
Terrance R. Whittemore
Donald W. Zipse

*Member Emeritus

Also included are the following nonvoting IEEE Standards Board liaisons:

Satish K. Aggarwal
James Beall
Richard B. Engelman
David E. Soffrin
Stanley Warshaw

Mary Lynne Nielsen
IEEE Standards Project Editor

--`,,`-`-`,,`,,`,`,,`---

Copyright The Institute of Electrical and Electronics Engineers, Inc.
Provided by IHS under license with IEEE
No reproduction or networking permitted without license from IHS

Not for Resale

Contents

SECTION PAGE

1. Scope 9

2. References 9
   2.1 General 9
   2.2 Effect of System Grounding on Transient Overvoltages 10
   2.3 Neutral Inversion and Instability 10
   2.4 Effects of Equipment-Neutral Grounding 11
   2.5 Single-Pole Switching of Transmission Lines 11
   2.6 Series Compensation of Transmission Lines 12

3. General Considerations 13

4. Transmission System Grounding 13
   4.1 General 13
   4.2 Control of Overvoltages Produced by Ground Faults and Degree of Surge-Voltage Protection With Surge Arresters 14
      4.2.1 Temporary Overvoltage (TOV) and Arrester Rating 14
      4.2.2 Effect of System Grounding on Transient Voltage 15
   4.3 Control of Ground Fault Currents 15
   4.4 Sensitivity, Operating Time, and Selectivity of the Grounding Relaying 18

5. Subtransmission System Grounding 18
   5.1 General 18
   5.2 Control of Overvoltages Produced by Ground Faults and Degree of Surge-Voltage Protection With Surge Arresters 20
      5.2.1 Temporary Overvoltage and Arrester Rating 20
      5.2.2 Effect of System Grounding on Transient Voltage 20
   5.3 Control of Ground Fault Currents 21
   5.4 Sensitivity, Operating Time, and Selectivity of the Grounding Relaying 23

6. Transformer Tertiary Systems 23

7. Equipment Neutral Grounding 25
   7.1 Shunt Capacitor Banks 25
      7.1.1 Switching Duty 26
      7.1.2 Energizing Transients 26
      7.1.3 Harmonic Currents 26
      7.1.4 Capacitor Fusing 26
      7.1.5 System Grounding 27
   7.2 High-Voltage Shunt Reactors 27
   7.3 Tapped Substation Transformers 27

8. Series-Compensated Transmission Lines 28

9. Bibliography 29

Copyright The Institute of Electrical and Electronics Engineers, Inc.
Provided by IHS under license with IEEE
No reproduction or networking permitted without license from IHS Not for Resale

SECTION PAGE

FIGURES

Fig 1 Temporary and Transient Overvoltages as a Function of X_0/X_1 16
Fig 2 Temporary and Transient Overvoltages for Reactive- and Resistance-Grounded Systems 17
Fig 3 Representative System Where Circuit-Breaker Opening Results in a Fault on an Ungrounded Circuit 19
Fig 4 Effect of Resistance Grounding on Line-to-Ground Transient Overvoltages Caused by Two Circuit-Breaker Restrikes, $X_0/X_1 = 30$ 22
Fig 5 Effect of Resistance Grounding on Line-to-Ground Transient Overvoltages Caused by Two Circuit Breaker Restrikes, $C_1/C_0 = 1.6$ 24
Fig 6 A Tapped Substation Resulting in Backfeed on a Transmission System 28

APPENDIXES

Appendix A Specifying a Grounding Device for a Transmission or a Subtransmission System (Examples) 31
A1 General 31
A2 Specifying a Grounding Transformer Bank 33
A3 Specifying a Neutral Grounding Resistor 34
A4 Specifying a Neutral Grounding Reactor 35
A5 Specifying a Ground-Fault Neutralizer 35

Appendix B Zero-Sequence Impedance Equivalent Circuit for an Autotransformer With an Impedance-Grounded Neutral and a Delta-Connected Tertiary 37

APPENDIX FIGURES

Fig A1 Sequence Components for Sizing a Grounding Transformer 32
Fig A2 Sequence Components for Sizing a Neutral Impedance 32
Fig B1 Three-Phase Autotransformer With Neutral Impedance and a Delta-Connected Tertiary 39
Fig B2 Zero-Sequence Impedance Equivalent Circuit for an Autotransformer 40

--`,,`,,-`-`,,`,,`,`,,`---
Copyright The Institute of Electrical and Electronics Engineers, Inc.
Provided by IHS under license with IEEE
No reproduction or networking permitted without license from IHS Not for Resale

IEEE Guide for the Application of Neutral Grounding in Electrical Utility Systems, Part V—Transmission Systems and Subtransmission Systems

1. Scope

The purpose of this document is to give the basic factors and general considerations in selecting the class and means of neutral grounding for a particular ac transmission or subtransmission system, and the suggested method and apparatus to be used to achieve the desired grounding.

Definitions of grounding terms used in this part of the guide may be found in IEEE Std C62.92-1987 [1].

2. References

This guide is to be used in conjunction with the following publications:

2.1 General

[1] IEEE Std C62.92-1987, IEEE Guide for the Application of Neutral Grounding in Electrical Utility Systems, Part I—Introduction (ANSI).[1]

[2] ANSI C92.1-1982, American National Standard for Power Systems—Insulation Coordination.[2]

[3] AIEE Committee Report, "Application Guide on Methods of Neutral Grounding of Transmission Systems," *AIEE Transactions on Power Apparatus and Systems,* vol. 72, pt. III, pp. 663–668, August 1953 (AIEE 954, October 1954).

[4] IEEE Std 32-1972 (Reaff. 1991), IEEE Standard Requirements, Terminology, and Test Procedures for Neutral Grounding Devices (ANSI).

[5] IEEE Tutorial Course, *Surge Protection in Power Systems*, Chapter 2, "Grounding Power System Neutrals," 79EH0144-6 PWR.

[1]IEEE publications are available from the Institute of Electrical and Electronics Engineers, Service Center, 445 Hoes Lane, P.O. Box 1331, Piscataway, NJ 08855-1331, USA.

[2]ANSI publications are available from the Sales Department, American National Standards Institute, 11 West 42nd Street, 13th Floor, New York, NY 10036, USA.

Copyright The Institute of Electrical and Electronics Engineers, Inc.
Provided by IHS under license with IEEE
No reproduction or networking permitted without license from IHS
Not for Resale

[6] IEEE Std C62.2-1987, IEEE Guide for the Application of Gapped Silicon-Carbide Surge Arresters for Alternating-Current Systems (ANSI).

[7] IEEE Std C62.11-1987, IEEE Standard for Metal-Oxide Surge Arresters for AC Power Circuits (ANSI).

[8] IEEE Std C62.22-1991, IEEE Guide for the Application of Metal-Oxide Surge Arresters for Alternating-Current Systems (ANSI).

2.2 Effect of System Grounding on Transient Overvoltages

[9] Peterson, Harold A., *Transients in Power Systems*. New York: John Wiley & Sons, Inc., 1951.

[10] Clarke, Edith, Crary, S. B., and Peterson, H. A., "Overvoltages During Power System Faults," *AIEE Transactions*, vol. 58, pp. 377–385, 1939.

[11] Evans, R. D., Montieth, A. C., and Witzke, R. L., "Power System Transients Caused by Switching and Faults," *AIEE Transactions*, vol. 58, pp. 386–397, 1939.

[12] Eaton, J. R., Peck, J. K., and Dunham, J. M., "Experimental Studies of Arcing Faults on a 75 kV Transmission System," *AIEE Transactions*, vol. 50, no. 4, pp. 1469–1479, 1931.

[13] Gilkeson, C. L. and Jeanne, P. A., "Overvoltages on Transmission Lines," *AIEE Transactions*, vol. 53, no. 5, pp. 1301–1309, 1934.

[14] Concordia, C. and Peterson, H. A., "Arcing Faults in Power Systems," *AIEE Transactions*, vol. 60, pp. 340–346, 1941.

[15] Allen, J. E. and Waldorf, S. K., "Arcing Ground Tests on a Normally Ungrounded 13-kV 3-Phase Bus," *AIEE Transactions*, vol. 65, pp. 298–306, 1946.

[16] Concordia C. and Skeats, W. F., "Effect of Restriking on Recovery Voltage," *AIEE Transactions*, vol. 58, pp. 371–376, 1939.

[17] Breuer, G. D., Johnson, I. B., and Lyon, S. V., "Grounding of Subtransmission Systems," *AIEE Transactions*, vol. 73, pt. III-B, Power Apparatus and Systems, pp. 1580–1585, 1954.

2.3 Neutral Inversion and Instability

[18] Shott, H. S. and Peterson, H. A., "Criteria for Neutral Stability of Wye-Grounded-Primary Broken Delta-Secondary Transformer Circuits," *AIEE Transactions*, vol. 60, pp. 997–1002, November 1941.

[19] Karlicek, R. F. and Taylor, E. R., Jr., "Ferroresonance of Grounded Potential Transformers on Ungrounded Power Systems," *AIEE Transactions*, vol. 78 pt. IIIA, Power Apparatus and Systems, pp. 607–614, 1959.

[20] Gleason, Lyle L., "Neutral Inversion of a Single Potential Transformer Connected Line to Ground on an Isolated Delta System," *AIEE Transactions*, vol. 70, pt. I, pp. 103–111, 1951.

[21] LaPierre, C.W., "Theory of Abnormal Line to Neutral Transformer Voltages," *AIEE Transactions*, vol. 50, pp. 328–342, 1931.

Copyright The Institute of Electrical and Electronics Engineers, Inc.
Provided by IHS under license with IEEE
No reproduction or networking permitted without license from IHS
Not for Resale

[22] Boyajian, A. and McCarthy, O. P. , "Physical Nature of Neutral Instability," *AIEE Transactions*, vol. 50, pp. 317–327, 1931.

[23] Weller, C. T., "Experiences with Grounded-Neutral, Y-Connected Potential Transformers on Ungrounded Systems,"*AIEE Transactions*, vol. 50, pp. 299–316, 1931.

2.4 Effects of Equipment-Neutral Grounding

[24] IEEE Std C37.04-1979 (Reaff 1988), IEEE Standard Rating Structure for AC High-Voltage Circuit Breakers Rated on a Symmetrical Current Basis (ANSI).

[25] ANSI C37.06-1987, American National Standard for Switchgear—AC High-Voltage Circuit Breakers Rated on a Symmetrical Current Basis—Preferred Ratings and Related Required Capabilities.

[26] IEEE Std C37.012-1979 (Reaff 1988), IEEE Application Guide for Capacitance Current Switching for AC High-Voltage Circuit Breakers Rated on a Symmetrical Current Basis (ANSI).

[27] PC37.99/Draft 10a (July 1990), Draft Guide for Protection of Shunt Capacitor Banks.[3]

[28] Van Sickle, R. C. and Zaborsky, J., "Capacitor Switching Phenomenon," *AIEE Transactions*, vol. 70, pp. 151–158, 1951.

[29] Johnson, I.B., Schultz, A. J., Schultz, N. R., and Shores, R. B., "Some Fundamentals of Capacitive Switching," *AIEE Transactions*, vol. 74, pt. III, Power Apparatus and Systems, pp. 727–736, 1955.

[30] Fillenberg, R. R., Cleaveland, G. W., and Harris, R. E., "Exploration of Transients by Switching Capacitors," *IEEE Transactions on Power Apparatus and Systems*, vol. PAS-90, no. 1, pp. 250–257, January/February 1971.

[31] Rogers, E. J. and Gillies, D. A., "Shunt Capacitor Switching EMI Voltages, Their Reduction in BPA Substations," *IEEE Transactions*, vol. PAS-93, pt. III, Power Apparatus and Systems, pp. 1849–1860, November/December 1974.

[32] Harner R. E. and Owen, R. E., "Neutral Displacement of Ungrounded Capacitor Banks During Switching," *IEEE Transactions on Power Apparatus and Systems*, vol. PAS-90, pp. 1631–1638, July/August 1971.

[33] Central Station Engineers of the Westinghouse Electric Corporation, *Electrical Transmission and Distribution Reference Book*, Chapter 23, Coordination of Power and Communication Systems. Raleigh, NC: Asea Brown Boveri/Transmission Technical Institute, 1950.

2.5 Single-Pole Switching of Transmission Lines

[34] Kimbark, E. W., "Bibliography on Single-Pole Switching," *IEEE Transactions on Power Apparatus and Systems*, vol. PAS-75, pp. 1072–1078, May/June 1975.

[3]This authorized standards project was not approved by the IEEE Standards Board at the time this standard went to press. It is available from the IEEE Service Center.

Copyright The Institute of Electrical and Electronics Engineers, Inc.
Provided by IHS under license with IEEE
No reproduction or networking permitted without license from IHS Not for Resale

[35] Kimbark, E.W., "Suppression of Ground-Fault Arcs on Single-Pole-Switched EHV Lines by Shunt Reactors," *IEEE Transactions on Power Apparatus and Systems*, vol. 83, pp. 285–290, March 1964.

[36] Shperling, B. R., Fakheri, A., and Ware, B. J., "Compensation Scheme for Single-Pole Switching on Untransposed Transmission Lines," *IEEE Transactions on Power Apparatus and Systems*, vol. PAS-97, pp. 1421–1429, July/August 1978.

[37] Knudsen, N., "Single-Phase Switching of Transmission Lines Using Reactors for Extinction of the Secondary Arc," CIGRE Report No. 10, 1962 session.

[38] Sekine, Y. et al., "Asymmetrical Four-Legged Reactor Extinguishing Secondary Arc Current for High-Speed Reclosing on UHV System," CIGRE Paper 38-03, 1984 Session.

2.6 Series Compensation of Transmission Lines

[39] Maneatis, J. A. et al., "500-kV Series Capacitor Installations in California," *IEEE Transactions on Power Apparatus and Systems*, vol. PAS-90, pp. 1138–1149, May/June 1978.

[40] Harder, E. L., Barkle, J. E., and Ferguson, R. W., "Series Capacitors During Faults and Reclosing," *AIEE Transactions*, vol. 70, pp. 1627–1642, 1957.

[41] Thanassoulis, P. et al., "Overvoltages on a Series-Compensated 750-kV System for the 10000 MW Itaipu Project," *IEEE Transactions on Power Apparatus and Systems*, vol. PAS-94, pp. 622–631, March/April 1975.

[42] Iliceto, F. et al., "Transient Voltages and Currents in Series-Compensated EHV Lines," *Proceedings of the IEE*, vol. 123, no. 8, pp. 811–817, August 1976.

[43] Niggli, M. R. et al., "Fault Clearing Overvoltages on Long Transformer Terminated Lines," *IEEE Transactions on Power Apparatus and Systems*, vol. 93, pp. 667–678, March/April 1974.

[44] Benko, I. S. et al., "Internal Overvoltages and Protective Devices in EHV Compensated Systems-Series Capacitors and Shunt Reactors," CIGRE Paper 33-05, 1976 Session.

[45] Wilson, D. D., "Series Compensated Lines—Voltage Across Circuit Breakers and Terminals Caused by Switching," *IEEE Transactions on Power Apparatus and Systems*, vol. PAS-92, pp. 1050–1056, May/June 1973.

[46] Butler, J. W. and Concordia, C., "Analysis of Series Capacitor Application Problems," *AIEE Transactions*, vol. 56, pp. 975–988, August 1937.

[47] IEEE Committee Report, "A Bibliography for the Study of Subsynchronous Resonance Between Rotating Machines and Power Systems," *IEEE Transactions on Power Apparatus and Systems*, vol. PAS-95, no. 1, pp. 216–218, January/February 1976. (See also later supplements to this bibliography.)

[48] Allustriarti, R. et al., "Design and Uprating Performance of 500-kV Metal-Oxide-Protected Series-Capacitor Banks on the Table Mountain-Tesla Line," *IEEE Transactions on Power Delivery*, vol. 3, no. 4, pp. 1951–1957, October 1988.

[49] Barcus, J. M. et al., "The Varistor Protected Series Capacitor at the 500-kV Broadview Substation," *IEEE Transactions on Power Delivery*, vol. 3, no. 4, pp. 1976–1985, October 1988.

Copyright The Institute of Electrical and Electronics Engineers, Inc.
Provided by IHS under license with IEEE
No reproduction or networking permitted without license from IHS
Not for Resale

3. General Considerations

AC transmission and subtransmission systems are generally qualified as those with the following common attributes as compared to generating systems, distribution systems, or auxiliary systems:

(1) With some exceptions, transmission and subtransmission systems take energy from or supply energy to other types of systems (i.e., *from* generating systems and *to* distribution systems) rather than supplying this energy at the ultimate utilization point.
(2) Transmission and subtransmission systems are three-phase systems.
(3) Energy is not supplied directly from generator terminals into these systems; that is, there is an interposing transformer between the generator and the system.

It is sometimes difficult to distinguish between transmission and subtransmission systems. The voltage range in transmission systems is 69 kV to 800 kV or higher, and in subtransmission systems, 115 kV to 34.5 kV or lower. That is, the higher voltages are associated with the term “transmission” and the lower voltages with “subtransmission.”

Generally, the basic factors that have to be evaluated in selecting a grounding scheme for either system are

— Control of overvoltages and degree of surge voltage protection with surge arresters
— Control of ground-fault currents
— Sensitivity, operating time, and selectivity of the ground-fault relaying

These three basic factors can have a considerable influence on system economics, the details of the system design and physical layout, and service continuity.

4. Transmission System Grounding

4.1 General. Grounding of the transmission system neutral is an established practice, and in the design of a new system or the revamping of an old one, the question is not “should the neutral be grounded,” but rather “what means of grounding is best suited to the application” [2], [3], [4].[4]

In systems operating at 115 kV and above, there are strong economic reasons encouraging the use of effective grounding [1]. The most significant factors are insulation costs and the lower cost per kilovoltampere of transformers. Neutral grounding affects insulation requirements in two ways. First, the use of effective grounding controls temporary overvoltages due to ground faults at lower levels than those obtained with other classes of grounding. Second, effective grounding permits the use of lower-rated surge arresters, thereby providing better protection of the insulation against surge voltages.

Many transmission systems consist of multiple voltage levels in which new higher voltage lines are overlayed on an older, lower voltage system. The different voltage levels are usually interconnected through autotransformers. This type of arrangement generally requires that both of the voltage levels be effectively grounded; otherwise, faults on the higher voltage system could impress excessive temporary overvoltages on the lower voltage system. Two-winding transformers could be used if it were desired to have one of the voltage levels noneffectively grounded, but the transformer cost differential encourages the use of autotransformers and effectively grounded systems.

The use of three winding transformers is another method to connect two transmission systems of different voltages together, or to connect a transmission system to a subtransmission

[4]The numbers in brackets correspond to those of the references in Section 2.

Copyright The Institute of Electrical and Electronics Engineers, Inc.
Provided by IHS under license with IEEE
No reproduction or networking permitted without license from IHS
Not for Resale

system. The transformer can have a wye-delta-wye connection, with the transmission system connected wye and either solidly grounded or grounded through a low impedance. Thus, the transformer is a ground source for both transmission systems. The delta winding may be left idle or may be used to provide station service, to supply capacitor or reactor banks, or to supply a distribution system. This winding should be protected against surges if the terminals of the delta are brought out.

Transmission systems are normally connected to generating systems by means of a delta-wye-connected transformer bank with the generator side connected in delta and the transmission system connected grounded wye. This connection provides a ground source for the transmission system. It also reduces the magnitude of ground-fault current in the generating system and keeps the third harmonic voltage possibly produced by the generator out of the transmission system.

4.2 Control of Overvoltages Produced by Ground Faults and Degree of Surge-Voltage Protection With Surge Arresters. There are two components of voltage or overvoltage in electrical systems when a system ground fault occurs or when a circuit breaker or a switch operates in clearing the ground fault. One of these is the temporary overvoltage or fundamental frequency overvoltage, and the second is the natural frequency voltage, usually of short duration, that is superimposed upon the temporary overvoltage. Since total voltages are of greater interest, the sum of the temporary overvoltage and the natural frequency voltage is commonly used and termed the transient voltage.

4.2.1 Temporary Overvoltage (TOV) and Arrester Rating. The ultimate surge voltage protection is obtained through arrester voltage ratings as low as system grounding conditions will permit during normal and abnormal system conditions. Initially, however, when the surge arrester was adopted as the basic protection device, the equipment design (coordination of major insulating structures) assumed that an “ungrounded neutral” or “100% rated” arrester would be used, unless otherwise specified [5].

In time, after successful service experience with 100% rated arresters (100% of maximum line-line voltage), it was reasoned that lower rated arresters would be suitable on grounded neutral systems. On these systems, the TOV on the unfaulted phases during a line-to-ground fault would bear the same relationship to arrester rating as “maximum line-line voltage” in an ungrounded system. An “effectively grounded” system was then defined in terms of the symmetrical-component sequence resistances and reactances [1], for which the TOV on an unfaulted phase does not exceed 80% of the maximum line-to-line voltage. Under this condition, an arrester rated at 80% of maximum line-to-line voltage was deemed applicable, and it was classified as a “grounded neutral” arrester.

The use of a “grounded neutral” arrester with lower protective levels enabled designs in some electrical equipment, such as transformers, to have reduced insulation levels with adequate protection. Reduced insulation allowed reduction in size, weight, and cost. Subsequently, still lower rated arresters were commonly applied whenever the grounding was significantly better than “effective,” particularly at system voltages where these reductions were significant (above 230 kV).

Usually the TOV produced by a system ground fault is greater than that produced by other causes (generator overspeed, ferroresonance, harmonics, etc.). An exception to this might occur on systems where the coefficient of grounding [1] is less than 80%.

The rating of gapped silicon-carbide surge arresters generally exceeded the TOV due to a phase-to-ground fault on the system where it was applied [6]. This criterion was based on the assumptions that the maximum TOV is produced by a ground fault and that the arrester might operate due to a surge while there was a ground fault on another phase. The arrester had then to seal off against the TOV, which was sustained until the fault was interrupted. There were some arresters that sealed off against voltages higher than their rating. Overvoltage characteristics for these arresters were published in the late 1960s or early 1970s. This feature has sometimes been utilized to provide lower protective levels.

Copyright The Institute of Electrical and Electronics Engineers, Inc.
Provided by IHS under license with IEEE
No reproduction or networking permitted without license from IHS
Not for Resale

An important consideration for selecting a metal-oxide arrester is the maximum continuous operating voltage (MCOV) [7]; however, the arrester will also be subjected to TOVs [8]. A conservative criterion is that the TOV should not exceed the duty cycle voltage rating of the arrester [7]. However, metal-oxide arresters can have thermal capability for TOVs in excess of the duty-cycle rating for specified times, and data and curves of TOV versus allowable time of the overvoltage are available [8].

The TOVs on the unfaulted phases during line-to-ground and line-to-line-to-ground faults may be ascertained from the coefficient of grounding, which is discussed in Appendix A of IEEE Std C62.92-1987 [1]. In addition to the formulas presented, curves are provided which show the relationship of the coefficient of grounding (COG) as a function of X_0/X_1 and R_0/X_1 for various values of R_1/X_1. From the information presented, it is possible to obtain a comprehensive view of the system TOVs during line-to-ground faults with variations in size and type of neutral impedance.

4.2.2 Effect of System Grounding on Transient Voltage. Curves for transient voltages following faults, in terms of system impedances viewed from the fault, cannot be compiled for the general case as is possible for TOVs. In an actual system, the transient voltages due to fault initiation are affected by the electrical system components and their configuration. As a first approach, however, indications of the maximum transient voltage to be expected can be ascertained from an idealized, lumped circuit without any damping. The maximum transient voltage is then obtained by adding the peak TOV to the peak natural frequency voltage on the assumption that inevitably these two components will have their maximum value at the same instant. Results based on these conditions are shown in Fig 1 as calculated from an idealized symmetrical-component circuit for a single generator and a delta-wye-grounded step-up transformer feeding a faulted transmission line, represented only by its positive- and zero-sequence capacitance [9], [10]. (X_{C1} and X_{C0} on Figs 1 and 2 are the positive-sequence and zero-sequence capacitive reactance, respectively. See A1.4 and IEEE Std C62.92-1987 [1].

If resistance is included, hand calculations are possible but are extremely time consuming; therefore, other means have been developed to facilitate finding the solutions to the problem, namely by a Transient Network Analyzer (TNA) or by digital transient analysis computer programs.

Examples of results obtained from a TNA for fault initiation are plotted in Fig 2, showing transient and temporary overvoltages for reactance- and resistance-grounded systems. The data was derived from a TNA study using an idealized three-phase circuit for the same system as for Fig 1 [10].

The above examples from these studies show the effects of system parameters (including system grounding) on the TOVs and transient voltages of a simplified transmission system. The results indicate that on an effectively grounded system (where $X_0/X_1 \leq 3$ and $R_0/X_1 < 1$ [1]), the transient voltages due to ground faults should be less than two times the normal line-to-neutral voltage, since X_{C0}/X_1 is usually well above 10.

4.3 Control of Ground Fault Currents. Transmission systems are normally grounded by grounded-wye transformer banks with delta-connected tertiary or delta-connected secondary windings. In some systems, the zero-sequence impedance is relatively low, and it may be desirable to increase this impedance by installing neutral reactors or operating with some transformer bank neutrals ungrounded. Neutral reactors are not usually installed in autotransformer neutrals. However, if it is determined that one is required, the equivalent zero-sequence impedance diagram with a neutral reactor is shown for an autotransformer with a delta-connected tertiary in Fig B2. The neutral of an autotransformer bank should never be operated ungrounded. To do so would allow the zero-sequence voltage from the high-voltage system to be applied directly to the low-voltage system without transformation.

If the zero-sequence impedance of a transformer system is too low, the following undesirable effects can result:

Copyright The Institute of Electrical and Electronics Engineers, Inc.
Provided by IHS under license with IEEE
No reproduction or networking permitted without license from IHS
Not for Resale

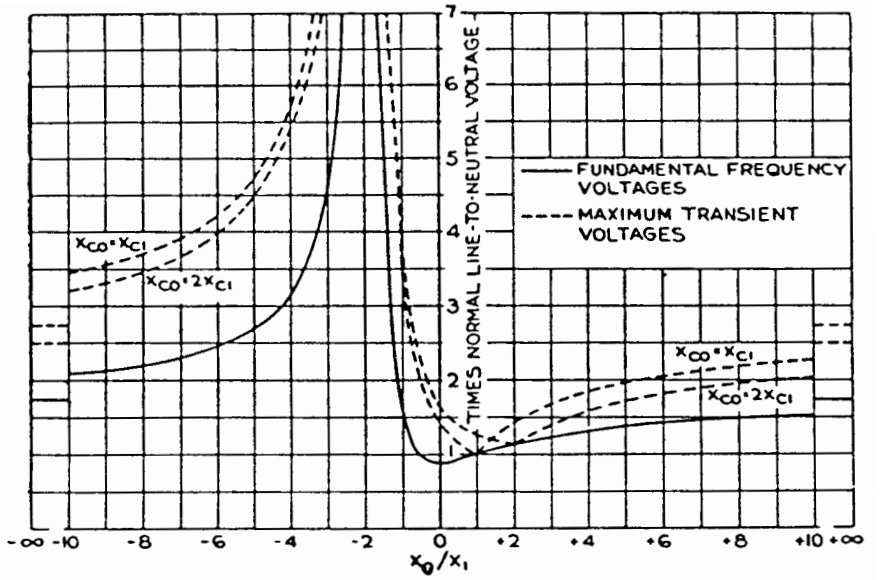

(a)

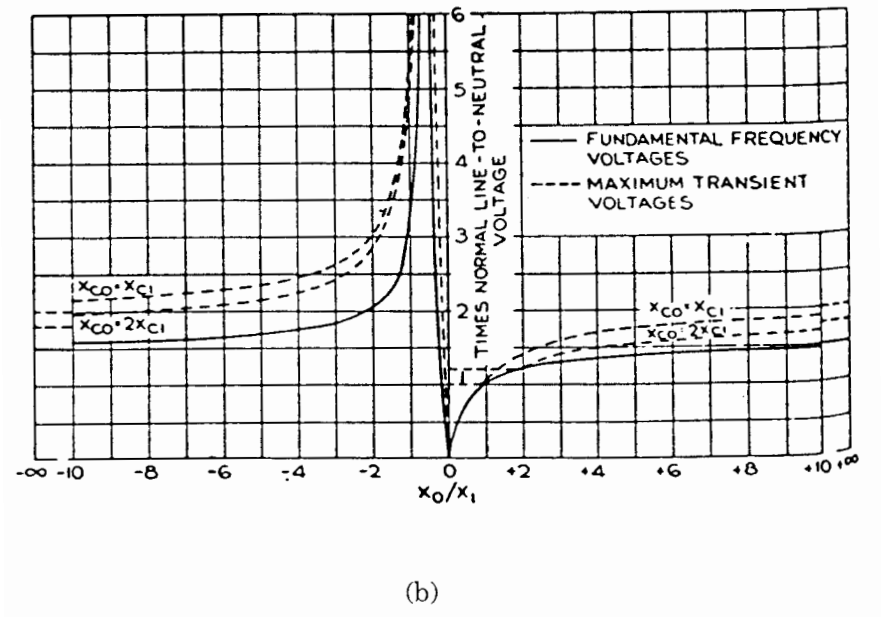

(b)

Fig 1
Temporary and Transient Overvoltages as a Function of X_0/X_1

Reprinted with permission from reference [10].

NOTES: (1) Magnitudes are maximum voltage-to-ground of faulted phases at fault location.
(2) Solid curves are TOV magnitudes; dotted curves are maximum transient overvoltages.
(3) Resistance of the system has been neglected.
(4) Fig 1a is for a line-to-ground fault; Fig 1b is for a double-line-to-ground fault.

Copyright The Institute of Electrical and Electronics Engineers, Inc.
Provided by IHS under license with IEEE
No reproduction or networking permitted without license from IHS
Not for Resale

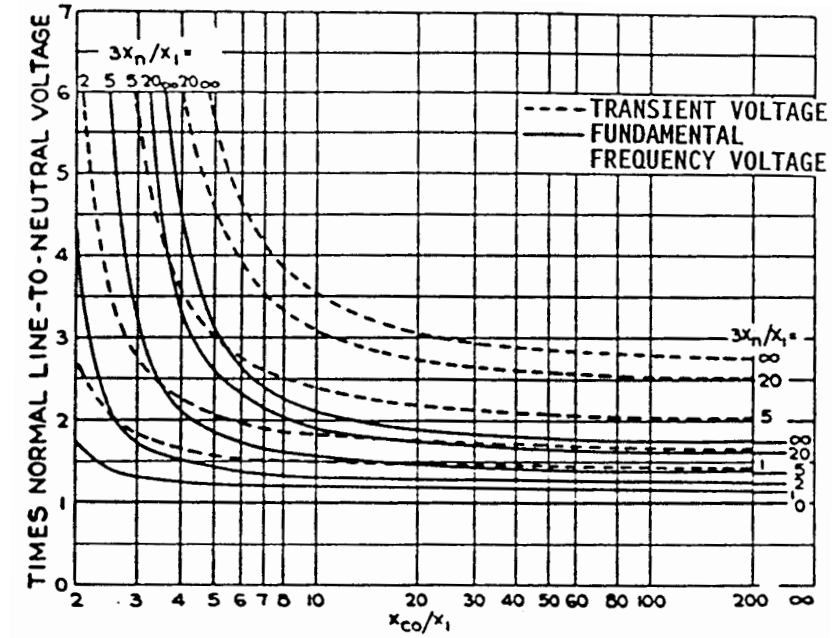

Fig 2
Temporary and Transient Overvoltages for Reactive- and Resistance-Grounded Systems

Reprinted with permission from reference [10].

NOTES: (1) Magnitudes are maximum voltage-to-ground of unfaulted phases at fault location.
(2) $X_0 = X_1$, $X_{C0} = X_{C1}$
(3) Solid curves are TOV magnitudes; dotted curves are maximum transient overvoltages.
(4) Fig 2a is for reactance neutral grounding, $3X_n /X_1$; Fig 2b is for resistance neutral grounding, $3r_n /X_1$

Copyright The Institute of Electrical and Electronics Engineers, Inc.
Provided by IHS under license with IEEE
No reproduction or networking permitted without license from IHS
Not for Resale

(1) The short-circuit duty on power circuit breakers will be greater for ground faults than for three-phase faults ($X_0 < X_1$), and it may exceed the breaker rating.
(2) The station ground potential may rise excessively with respect to remote ground during ground faults because of a high-magnitude fault current.
(3) The system stability margins may be excessively reduced when considering failure of circuit breakers to trip during ground faults.
(4) During a ground fault the positive-sequence voltage is reduced and there is a negative-sequence voltage. This effect is greater for lower X_0 / X_1 ratios. These voltage changes are undesirable because they may produce excessive torques on three-phase machines. In a few situations, low-resistance neutral grounding resistors have been used on generator transformer neutrals to provide damping of torques during ground faults. These systems, however, are still effectively grounded.
(5) The zero-sequence voltage during a ground fault is lower for low values of X_0 / X_1. This voltage produces operating and polarizing currents in the ground relays at remote terminals and may not be sufficient for positive operation.

These problems have to be studied by the system engineer and an acceptable value of zero-sequence impedance selected to balance the advantages of smaller fault currents against the increase in fault overvoltages in the system.

If neutral reactors or resistors are installed in the transformer neutral, voltage during ground faults should be calculated to see that the transformer neutral and the reactor or resistor are not overstressed. That is, the neutral-to-ground voltage resulting during a fault should not exceed the rated voltage of the transformer neutral.

When a neutral reactor or resistor is used, a surge arrester is usually needed to protect the transformer neutral from voltages due to switching surges from the system or from lightning surges. Lightning striking the station can cause the station ground potential to rise above the potential of the transformer neutral. An arrester with the same voltage rating as the transformer neutral has been frequently used.

If the transformer neutral is ungrounded, it is recommended that the neutral voltage rise during a fault be studied to ensure that the neutral insulation is not overstressed. For example, as shown in Fig 3, if a transformer is connected to a generator or other source on the low-voltage side, but disconnected from the system on the high-voltage side, there can be a high TOV on the transformer high-voltage neutral due to a ground fault on the high-voltage side of the transformer. For this reason, a generator transformer neutral with reduced insulation should not be ungrounded. Further, it is recommended that if the transformer neutral is ungrounded, a surge arrester should be provided to protect the neutral from switching and lightning surges, selected for the highest neutral voltage as determined by the study.

4.4 Sensitivity, Operating Time, and Selectivity of the Grounding Relaying. The type of grounding employed on a system has a considerable influence on the type of ground-fault relaying equipment needed. Since transmission systems are generally effectively grounded, they will have maximum phase-to-ground fault currents of the same order of magnitude as their three-phase fault currents and will require rapid clearing to minimize voltage disturbances, instability, and high ground potential rises and equipment damage.

5. Subtransmission System Grounding

5.1 General. The basic considerations in the grounding of subtransmission systems are not different from those of transmission systems. However, lower voltages employed for subtransmission make insulation costs less significant than in the higher voltage systems. As a result, other types of grounding can be used, although effective grounding is most common.

Delta-connected transformer windings are commonly found at subtransmission voltages. For example, in transformers stepping down from the transmission voltage level, the use of a

Copyright The Institute of Electrical and Electronics Engineers, Inc.
Provided by IHS under license with IEEE
No reproduction or networking permitted without license from IHS
Not for Resale

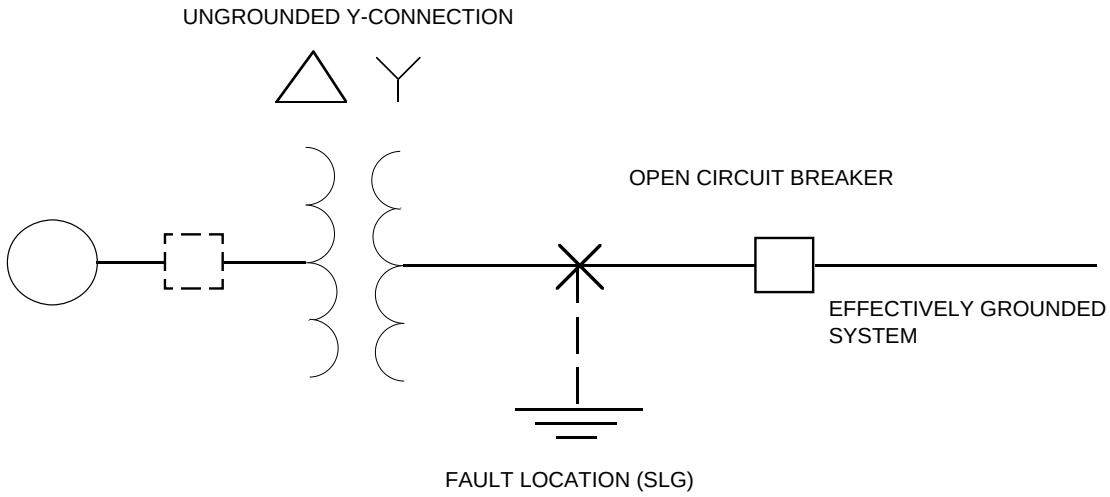

Fig 3
Representative System Where Circuit-Breaker Opening Results in a Fault on an Ungrounded Circuit

wye-delta connection provides an inexpensive design with adequate third harmonic suppression, and it permits the neutral of the wye connection to serve as a grounding point for the high-voltage system. Transformers stepping down from subtransmission to distribution voltage are frequently delta-wye connected in order to provide a stabilized neutral for four-wire distribution circuits. Many systems, of course, utilize other connections for a variety of reasons, including maintenance of phase relationship and neutral grounding of the subtransmission system.

The abundance of delta connections on subtransmission systems requires that the neutral grounding for the system be adequately planned to ensure that proper grounding is maintained for all expected system operating contingencies. In general, two different types of locations are available for grounding a subtransmission system: the source transformers (stepping down from the transmission voltage) and the load transformers (stepping down to a distribution voltage for large customers). Where a choice is available, the source transformers are the preferred location for grounding. Ideally, a source of ground current should be provided at each source of power to ensure that whenever the system is energized it is properly grounded.

If grounding at the system sources is not convenient or not economical, it is possible to ground the system adequately through the use of wye-connected, high-voltage windings at the load transformers. To do this properly, it is necessary that a number of transformers be wye connected so that, during fault conditions or routine switching, the subtransmission system does not become isolated from its ground sources while still connected to the power source.

If a subtransmission system is connected to another voltage level through an autotransformer, the subtransmission system is usually effectively grounded for the reasons noted in 4.1. Even if the system design is such that effective grounding is not required, there are advantages to consider in its use. First, if a suitable number of wye-connected transformers are available, it is generally the least expensive method. Second, effective grounding permits the use of lower rated surge arresters, which reduces arrester costs and provides maximum protective margins to the equipment insulation. Further economies through the use of reduced equipment insulation levels are possible. Finally, ground-fault relaying on an effectively grounded system is usually the least expensive protection system.

Copyright The Institute of Electrical and Electronics Engineers, Inc.
Provided by IHS under license with IEEE
No reproduction or networking permitted without license from IHS
Not for Resale

Despite these advantages of effective grounding, there are specific instances in which consideration of other grounding methods is appropriate. If problems such as communication overbuilds or ground potential rise require limitation of the ground-fault current (to less than 60% of three-phase fault current), Low-Resistance Grounding ([1]) provides an attractive alternative to effective grounding. Transient overvoltages are well controlled with this method, and relaying is similar to that used on effectively grounded systems.

Low-Resistance Grounding may also be less expensive than effective grounding, if grounding transformers are required. Grounding transformers with neutral resistors could have a lower current rating, decreasing costs. Grounding transformers used for this service should have a low enough zero-sequence impedance to meet the required goals [1]. The neutral insulation of the transformer should be rated for system phase-to-neutral voltage.

If grounding transformers without neutral resistors are used to ground the system, the grounding may be Low-Inductance or High-Inductance Grounding ([1]), depending upon whether the grounding transformer impedance(s) produce an X_0/X_1 ratio of less than or more than 10. High-Inductance Grounding can have higher transient overvoltages than Low-Resistance Grounding. With High-Inductance Grounding and a possibility of circuit breaker restriking, transient voltages may need to be controlled with surge arresters.

5.2 Control of Overvoltages Produced by Ground Faults and Degree of Surge-Voltage Protection With Surge Arresters

5.2.1 Temporary Overvoltage and Surge Arrester Rating. The voltage rating of surge arresters on a subtransmission system should be based on the maximu continuous operating voltage as well as the magnitude and duration of the maximum TOV. The maximum TOV will usually occur during phase-to-ground faults and can be determined by calculation or from the coefficient of grounding curves in Appendix A of IEEE Std C62.92-1987 [1]. The MCOV should be determined for all contingency conditions and may be especially of concern during light-load conditions or where high-voltage capacitor banks are present.

5.2.2 Effect of System Grounding on Transient Voltage. If the subtransmission system is not effectively grounded, the transient voltages due to a ground fault will be somewhat higher than if the system were effectively grounded. An approximation of these voltages can be made from Figs 1 and 2. More accurate determination of the transient voltages can be made with available computer programs. Surge arresters limit high transient voltages; however, their discharge energy capability must not be exceeded.

An intermittent conductor-to-ground arcing fault was often referred to as an “arcing ground” in the early technical papers on ungrounded neutral operation. Theories were given to show how an “arcing ground” could have caused apparatus breakdowns. Apparatus failures were more frequent in this early period, but inadequate insulation strength or inadequate surge protection was probably more often the cause of the trouble rather than the “arcing ground.”

An arcing fault, to produce an extremely high overvoltage, has to occur in a medium where the dielectric strength in the arc path increases for each restrike of the arc following its repeated extinction, resulting in higher and higher voltages being obtained on successive restrikes. Field tests on actual systems during arcs to ground failed to produce these high overvoltages. This supports the conclusion that the mechanism for producing these high overvoltages is not available for an arc in air or in a solid dielectric [11], [12], [13], [14], [15].

Reignitions or restrikes in a switch or a circuit breaker may produce high overvoltages [16]. Reignitions between contacts may occur several times. Following each, a higher voltage is required for a subsequent reignition because the dielectric strength usually increases as the switch contacts part farther.

The maximum overvoltage caused by restrikes of switches is a function of the system neutral grounding. The highest overvoltages occur on the ungrounded neutral system. Overvoltages in the ground-fault neutralizer system are next in severity [1]. Effectively grounded

Copyright The Institute of Electrical and Electronics Engineers, Inc.
Provided by IHS under license with IEEE
No reproduction or networking permitted without license from IHS
Not for Resale

systems, low-inductance grounded systems, and low-resistance systems have the lowest transient overvoltages [1], [16]. But when the reactance ratio X_0 / X_1 exceeds 10, high transient overvoltages can occur [1].

The results of a TNA study done in 1954 ([17]) showed the effects of resistance grounding in subtransmission systems on the line-to-ground transient overvoltages caused during restrikes in a circuit breaker interrupted a line-to-ground fault. Two restrikes were simulated at points in time to give the highest overvoltages. The purpose of the study was to determine the value of resistance that would limit the transient overvoltages to less than three times normal line-to-ground voltage. Three times per unit was chosen because this value was, at that time, the approximate switching-surge sparkover voltage of an ungrounded-neutral-rated, gapped, surge arrester.

Results of the TNA study are shown in Figs 4 and 5 and indicate the following:

(1) For grounding conditions in which $X_0 / X_1 \geq 10$, the use of the neutral grounding resistor reduces the recovery voltage across the contacts of the interrupting circuit breaker, thereby reducing the probability of restriking and cumulative build-up in voltage, either on the faulted phase or on unfaulted phases.
(2) On most systems, if the grounding conditions are such that $R_0 / X_0 \geq 2$, the transient overvoltages that result from restriking in a circuit breaker that interrupts a line-to-ground fault will not exceed 3.0 per unit regardless of the ratio X_0 / X_1.
(3) System conditions involving values of $R_0 / X_0 \geq 15$ can result in transient overvoltages near 3.0 per unit when the ratio X_{C0} / X_1 is around 150 or 200.
(4) For grounding conditions based on $R_0 / X_0 \geq 2$, the increase in voltage produced by the second restrike is small, and the cumulative build-up in voltage with more than two restrikes is negligible.
(5) For grounding conditions such that R_0 / X_0 is relatively small and $X_0 / X_1 \geq 10$, transient overvoltages near 3.0 per unit can occur following a second restrike.

5.3 Control of Ground Fault Currents. If a subtransmission system is entirely supplied from grounded-wye connected transformers, which include delta-connected windings, the zero-sequence impedance at this ground source will be less than the positive-sequence impedance, and the system will be effectively grounded. Therefore, the single-line-to-ground (SLG) fault current will be larger than the three-phase fault current. A reactor is sometimes installed in the neutral of the grounded-wye winding to reduce the SLG fault current. The transformer neutral and neutral reactor should then be capable of withstanding the voltage across the reactor during ground faults and be protected against transient voltage surges as discussed in 4.3.

If a grounding transformer is used to establish system grounding conditions, a system ground-fault study should be done to size the transformer. The transformer should have sufficiently high reactance so that the current in a nearby fault will not require an excessive kilovoltampere unit size, but low enough reactance to allow adequate current for relaying ground faults at the far end of the circuit. One criterion in determining the maximum grounding transformer impedance is that the ground current for a fault at the most remote point on the circuit should be at least 10% of the three-phase fault current. This criterion should permit X_0/X_1 ratios as high as 28. But the TOVs on the unfaulted phases during a ground fault should not exceed the capability of the surge arresters on this circuit.

The high inductive reactance of the grounding transformer may cause the R_0/X_0 ratio to be very small. Unfortunately, the highest transient overvoltages occur when this ratio is zero as shown by Curve A of Figs 4 and 5. Since these overvoltages are of the nature of switching surges, they may be limited in magnitude by surge arresters. However, as mentioned earlier, these overvoltages occur during restriking of the circuit breaker that interrupts the fault. They should not occur as often in modern “restrike-free” circuit breakers.

A grounding transformer selected by the above criterion will have maximum impedance and minimum kilovoltampere rating. However, very high values of reactance should be

Copyright The Institute of Electrical and Electronics Engineers, Inc.
Provided by IHS under license with IEEE
No reproduction or networking permitted without license from IHS
Not for Resale

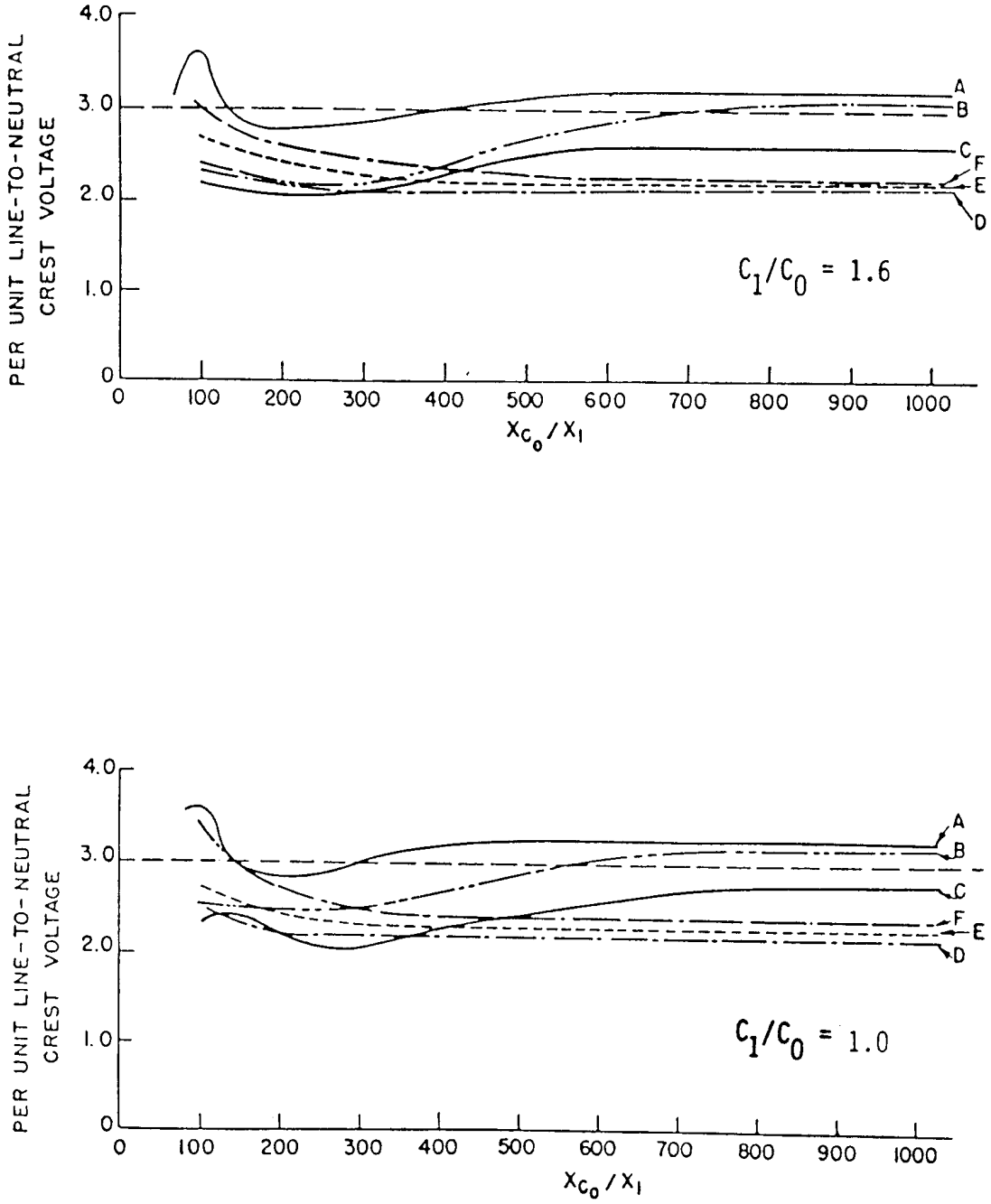

Fig 4
Effect of Resistance Grounding on Line-to-Ground Transient Overvoltages Caused by Two Circuit-Breaker Restrikes, $X_0/X_1 = 30$

Reprinted with permission from reference [17].

NOTE: R_0/X_0 for Curve A = 0, B = 1, C = 2, D = 5, E = 10, and F = 20.

Copyright The Institute of Electrical and Electronics Engineers, Inc.
Provided by IHS under license with IEEE
No reproduction or networking permitted without license from IHS
Not for Resale

avoided to prevent harmonic resonance from occurring between the zero-sequence capacitance of the system and the zero-sequence inductance of the grounding transformer. Usually the third harmonic frequency is of most concern, but other triplen harmonics should be considered.

Reducing both the size of the grounding transformer and the transient overvoltages can be accomplished by installing a resistor in the neutral of the grounding transformer such that $R_0 / X_0 \geq 2$. The fault current, however, should still be at least 10% of the three-phase value for faults anywhere in the circuit. Curves C, D, E, and F in Figs 4 and 5 show that the transient overvoltages are considerably less than three per unit when $R_0 / X_0 \geq 2$.

If Low-Resistance Grounding is used, economics generally dictate that the grounding resistance limit the ground-fault current to a range of 10–25% of the three-phase fault current. Again, the lower range of 10% is established by the minimum current requirements for relaying, and the upper range of 25% by the cost of the resistor as dictated by the watts loss in the resistor and the cost relative to that of reactive grounding.

5.4 Sensitivity, Operating Time, and Selectivity of the Grounding Relaying. Subtransmission systems with very low levels of ground-fault current, such as ungrounded, high-resistance grounded, and neutralizer grounded ([1]), are often not equipped with ground-fault relaying. However, there are relaying systems that can provide selective ground-fault protection. Alternatively, the systems may have a temporary grounding device actuated by the ground fault to develop enough ground-fault current for clearing by conventional relays.

Low-resistance and effectively grounded systems for subtransmission networks are generally designed to permit the use of conventional ground relays.

6. Transformer Tertiary Systems

The delta-connected tertiaries of autotransformers or wye-wye power transformers can be used within the substation for various purposes. Among these are:

(1) Connection of shunt capacitors or reactors for voltage control
(2) Connection of synchronous condensers
(3) Station service supply

Although these tertiary voltage systems are generally within the distribution voltage class (5–35 kV), the neutral grounding requirements are usually different from those of a utility distribution system. Because of the very limited extent of the system, the delta connection of the source, and the absence of a need for four-wire service, there is little reason to effectively ground such systems. In addition, the very high short-circuit duty available on many tertiaries would require a very expensive, high-capacity grounding transformer in order to produce an X_0 / X_1 ratio of less than 3.0.

As a result of these considerations, tertiary systems are often designed as nominally ungrounded systems. Because of their limited extent, the system zero-sequence capacitance is small, unless cable is used, and these systems are unlikely to suffer from the severe overvoltage problems that sometimes afflict large ungrounded systems.

If the tertiary voltage system is to be operated ungrounded, then the neutrals of connected apparatus such as reactors, capacitors, and station service transformers should also be ungrounded. If these were to be grounded, the character of the system grounding would be changed depending on whether the apparatus is in service. In particular, grounded capacitor banks should be avoided because of the overvoltage associated with ground faults on capacitively grounded systems.

Where synchronous condensers or other large machines are connected directly to the tertiary system, the grounding requirements of the machine have to be considered. The genera-

Copyright The Institute of Electrical and Electronics Engineers, Inc.
Provided by IHS under license with IEEE
No reproduction or networking permitted without license from IHS
Not for Resale

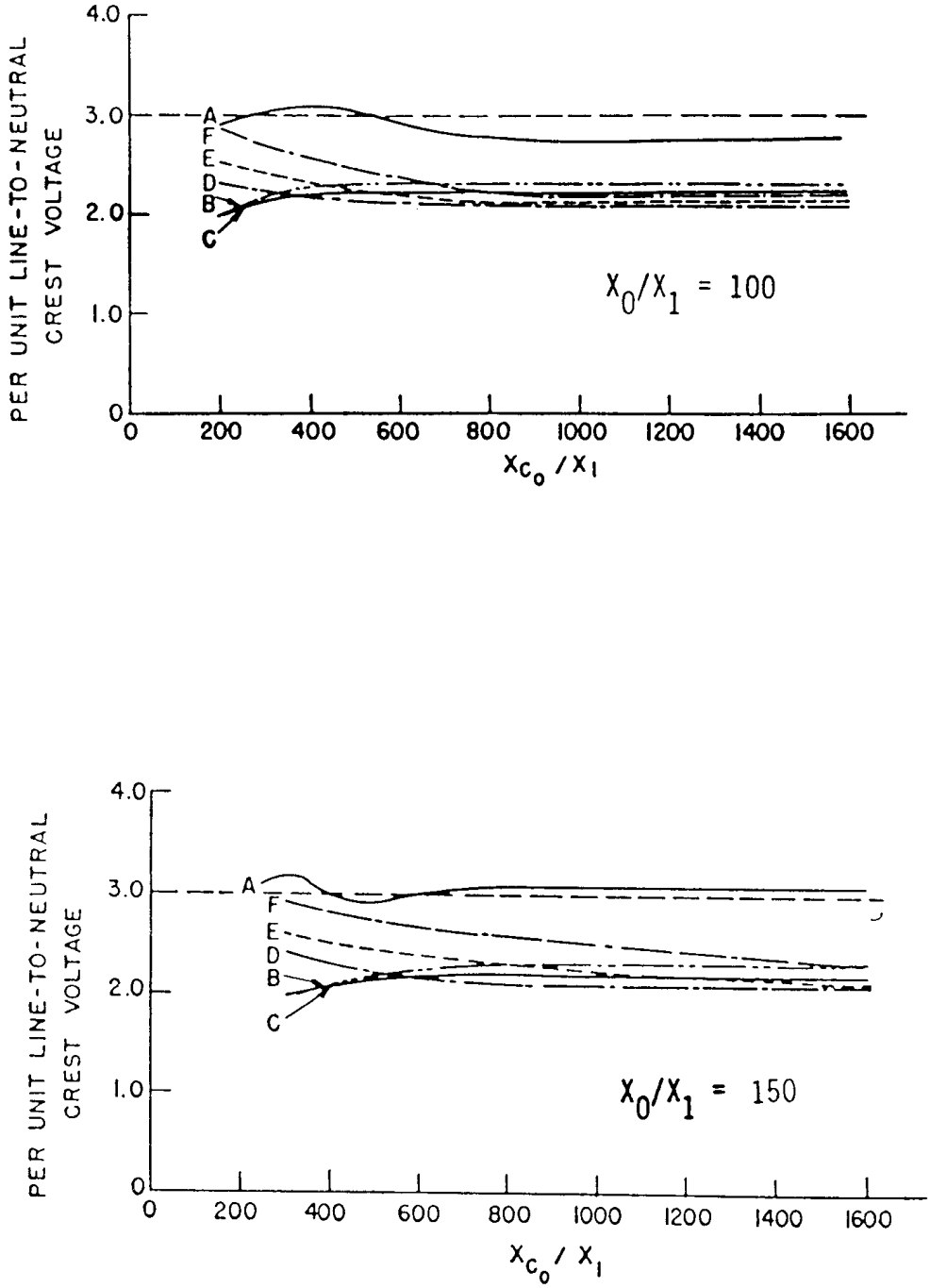

Fig 5
Effect of Resistance Grounding on Line-to-Ground Transient Overvoltages Caused by Two Circuit-Breaker Restrikes, C_1/C_0 = 1.6

Reprinted with permission from reference [17].

NOTE: R_0/X_0 for Curve A = 0, B = 1, C = 2, D = 5, E = 10, and F = 20.

Copyright The Institute of Electrical and Electronics Engineers, Inc.
Provided by IHS under license with IEEE
No reproduction or networking permitted without license from IHS
Not for Resale

tor grounding (IEEE Std C62.92.2-1989 [B2]) contains information applicable to such installations.

In most instances, it will be desirable to provide a ground detector to detect the presence of an accidental ground on the tertiary voltage system. This detector will usually take the form of a voltage relay supplied from either a single-line-to-ground voltage transformer or three voltage transformers connected in wye-broken delta configuration. On tertiary systems of limited extent, such voltage transformer installations may be subject to neutral inversion [18], [19], [20] or neutral instability [19], [20], [21], [22], [23]. In the more common case of three voltage transformers, neutral instability can generally be eliminated by the proper application of a resistance burden across the broken delta secondary [18], [19] or in the primary neutral.

The addition of a resistance burden across the broken delta secondary to prevent ferrononlinear oscillations has two additional benefits. First, the resistance burden tends to damp out possible overvoltages caused by intermittent arcing faults to ground. Optimum performance in this regard requires that the installation meet the high resistance grounding criterion: the watts loss in the resistor during a solid phase-to-ground fault equals or exceeds the VARs supplied by $3C_g$ (the sum of the three system phase-to-ground capacitances). Care should be taken to insure that the voltage and power ratings of the voltage transformers and the resistance burden are not exceeded when the tertiary system is grounded by a SLG fault.

The second benefit of resistance loading of the secondary delta of the voltage transformers is the tendency of the loading to stabilize the neutral of the system under normal conditions; i.e., to equalize the magnitude of the three phase-to-ground voltages. Without resistance loading, the phase-to-ground voltages are determined solely by the relative values of the three phase-to-ground capacitances.

These capacitances may be quite unequal because of the absence of transpositions inherent in bus structures. Unbalance of the voltages to ground is undesirable, since it will tend to cause the ground detector to indicate a system ground fault when none is present. The stabilizing effect of the secondary resistance is particularly important when the source transformers are composed of single-phase units that may not have equal capacitances from the tertiary winding to ground. This can occur even for transformers whose principal electrical characteristics are similar but that were produced by different manufacturers. A common situation producing this problem is the use of a non-identical spare transformer in a bank normally consisting of identical units.

7. Equipment Neutral Grounding

In addition to the basic decision of how a system is to be grounded, questions arise from time to time about neutral grounding of specific pieces of apparatus connected to the system. On effectively grounded systems, equipment neutral grounding can generally be freely chosen since it will have little or no impact on the character of the system grounding in noneffectively grounded systems. Grounding the neutral of a specific piece of apparatus may change the character of the system grounding and may result in the apparatus rating being exceeded. Careful analysis is required to assess the full significance before a decision is made to install grounded neutral equipment on noneffectively grounded systems.

The following subsections discuss specific pieces of apparatus that are usually wye connected and the specific characteristics of operating these devices with grounded or ungrounded neutrals.

7.1 Shunt Capacitor Banks. Neutral grounding of shunt capacitor banks has significant effect in several distinct areas, each of which requires consideration in the grounding decision. These areas are

(1) Duty on the capacitor switching device

Copyright The Institute of Electrical and Electronics Engineers, Inc.
Provided by IHS under license with IEEE
No reproduction or networking permitted without license from IHS
Not for Resale

(2) Transients created by capacitor switching
(3) Harmonic current distribution
(4) Capacitor fusing
(5) System grounding

These considerations, together with insulation requirements, usually result in the grounding of capacitor banks applied to systems above 230 kV.

7.1.1 Switching Duty ([24], [25], [26], [27]). The recovery voltage across the switching device that is deenergizing a capacitor bank is higher (approximately 3 p.u. versus 2 p.u.) for an ungrounded capacitor bank than for a grounded capacitor bank [28], [29]. At transmission and subtransmission voltages, the higher recovery voltage may mean that a given switching device cannot interrupt as large an ungrounded bank as it can a grounded one. At transmission voltages (above 138 kV), devices for switching ungrounded capacitor banks may require special considerations.

7.1.2 Energizing Transients. Energizing capacitor banks, particularly when two or more are connected to the same bus, produces a large, high-frequency transient current. When these capacitors are connected in grounded-wye configuration, these transients flow in the station ground grid. The transient ground currents produced by large, high-voltage shunt capacitor banks can induce high voltages into the low-voltage, station control, and protective circuitry and into secondary circuits of current transformers [30]. Equipment damage and false operation have been reported as being caused by such transients. Special shielding measures and grounding techniques may be required to control these effects, as well as the use of current-limiting reactors in the switched circuit [27], [31].

Transient energizing currents for ungrounded banks are confined to the phase conductors and do not usually induce significant voltages into the control wiring. Transient voltages may appear, however, on the ungrounded neutral [32]. These may be of importance if an instrument transformer is connected from neutral-to-ground for relay protection of the capacitor bank [27].

7.1.3 Harmonic Currents [27]. Capacitor banks have a lower impedance at harmonic frequencies than at 60 Hz. As a result, installation of a capacitor bank may cause a redistribution of harmonic current flow on the power system. Capacitor banks do not create harmonic currents, but by changing the apparent impedance of the system at harmonic frequencies, they can redirect the flow of harmonic current drawn by transformers and customer loads.

Harmonic current flow is of interest primarily because of the need to avoid interference in communication circuits that parallel power lines [33]. The principal interfering harmonics are those of odd triple frequency (180 Hz, 540 Hz, 900 Hz, etc.). When balanced, these triple harmonics are equal and in phase in the three phases and are hence zero-sequence quantities. It is for this reason that they cause the most interference with communication circuits. Since the odd triple-harmonic currents are zero-sequence quantities, they will flow into a capacitor bank only if it has a grounded neutral. Installing a particular grounded capacitor bank may have an adverse effect, a beneficial effect, or no effect on a given inductive coordination problem. A system analysis is required to predict the expected effect of any given installation. An ungrounded bank can be expected to have substantially no effect on triple-harmonic flow.

7.1.4 Capacitor Fusing [27]. In ungrounded capacitor banks, the fault current for a shorted capacitor unit is limited by the impedance of the capacitors in the other two phases.

Similarly, in large high-voltage capacitor banks, which consist of several series-connected groups of capacitor units, the maximum fault current is limited by the impedance of the other series groups, regardless of whether the bank neutral is grounded. However, in grounded banks with single-series groups of capacitor units rated at line-to-neutral voltage, the avail-

Copyright The Institute of Electrical and Electronics Engineers, Inc.
Provided by IHS under license with IEEE
No reproduction or networking permitted without license from IHS
Not for Resale

able short-circuit current is equal to the full system phase-to-ground short-circuit current, requiring fuses capable of interrupting this current.

7.1.5 System Grounding. Installation of a grounded capacitor bank on an effectively grounded system will, in most cases, have a negligible effect on the system grounding. In unusual cases, such as the installation of a large grounded capacitor bank at a remote station with no grounded transformer banks, the installation should probably be reviewed to insure that the X_0/X_1 ratio does not become excessively high and possibly negative, and that directional ground relays will not operate incorrectly due to capacitive current flow to external ground faults.

Grounded capacitor banks should be avoided on systems that are ungrounded, resistance grounded, or resonant grounded [1]. The high voltage on the unfaulted phases of such systems during a ground fault will put an overvoltage on the capacitor units and possibly other apparatus. In addition, the presence of the capacitor bank will greatly increase the system zero-sequence capacitance, emphasizing the transient overvoltage characteristics of ungrounded systems and interfering with the transient suppression properties of resistance grounding.

Where it is desired to use a grounded capacitor bank on an Inductance Grounded system, the application should be carefully studied to ensure that the capacitor bank does not cause an unacceptable increase in temporary or transient overvoltages.

7.2 High-Voltage Shunt Reactors. High-voltage shunt reactors are connected to the lines or buses of many high-voltage systems (230 kV and above) to compensate for the high capacitive charging current of underground cables or long transmission lines. The most economical construction for such reactors is a grounded-wye configuration with the winding insulation graded to a relatively low level (usually 15 kV class, 110 kV BIL) at the neutral grounded end. Since these high-voltage systems are universally effectively grounded, the moderate amount of zero-sequence current contributed by these reactors has no noticeable effect on the system grounding.

In certain applications such as a single-pole tripping on long overhead lines, it may be necessary to install shunt reactors on the line with a neutral reactor so that the zero-sequence impedance is greater than the positive-sequence impedance [34], [35], [36], [37]. Some high-voltage, three-phase reactors are also designed to have higher X_0 than X_1 [38]. This is necessary in order to reduce the secondary fault current of such systems (i.e., the fault current that continues to flow after the faulted phase has been opened) in order to allow single-pole reclosing of the circuit breaker. This current is caused by the capacitive coupling between the open phase and the two remaining energized phases. With this additional neutral impedance, the reactor neutral point will have a potential to ground under both ground fault and single-phase open-pole conditions. This value ranges from 30–60% of phase-to-neutral voltage on effectively grounded systems, depending on the neutral reactance. This, of course, may require greater insulation at the neutral end of the phase reactors as compared to the solidly grounded case, and it also usually may require the provision of surge protection for the neutral end insulation.

7.3 Tapped Substation Transformers. When a substation transformer is tapped to or fed directly from a transmission line or subtransmission line, it is common practice to use a delta connection so as not to reduce relay current at the source breaker or breakers during ground faults. If the substation feeds a system that has permanent or temporary backfeed due to large generators or motors, or other transformers with their secondaries connected in parallel (Fig 6), the line will become an ungrounded system when disconnected from the source. If this is due to a permanent ground fault on the line, voltages to ground approaching normal line-to-line voltage can occur on the unfaulted phases. These voltages may exceed insulation levels and arrester ratings on transmission lines that are normally effectively grounded.

Accordingly, insulation levels and arrester ratings on a part of the transmission line, which may be backfed from a tapped substation, may have to be raised to levels associated with

Copyright The Institute of Electrical and Electronics Engineers, Inc.
Provided by IHS under license with IEEE
No reproduction or networking permitted without license from IHS
Not for Resale

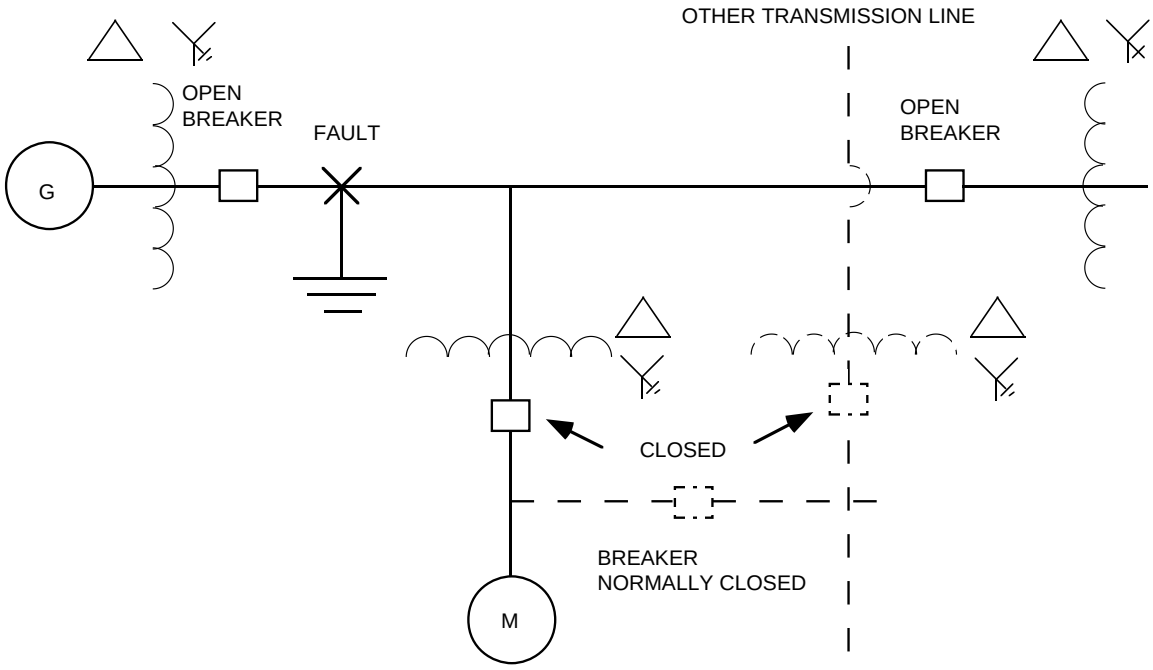

Fig 6
A Tapped Substation Resulting in Backfeed on a Transmission System

100% line-to-line voltage rather than those for the 80% voltage generally used with effectively grounded systems. The determining factor will be how much positive-sequence voltage the generators or motors are able to maintain with the existing loads. The source of backfeed should be tripped as soon as possible.

If a grounded-wye connection is used for the tapped substation transformer, the neutral of the wye will be grounded, usually through a relatively high-impedance neutral reactor. If a subsystem with backfeed is isolated on a section of transmission line, the system will not be ungrounded, but grounded through this reactor. The TOV on unfaulted phases during a ground fault will, therefore, be determined by the positive-sequence voltage that the source of backfeed is able to maintain and by the ratio of Z_0/Z_1.

8. Series-Compensated Transmission Lines

Series compensation of long high-voltage and extra-high-voltage lines has become almost standard practice [39]. The presence of series compensation affects the X_0/X_1 ratios of the system, with the reactance of the series capacitor appearing in all three sequence networks. Therefore, temporary and transient overvoltages as a result of faults, as well as circuit-breaker recovery voltages and surge arrester operation, are different than those that would appear in the uncompensated system [40], [41], [42], [43], [44], [45].

There have also been concerns about ferroresonant TOVs in series-compensation systems [46], but few if any cases of ferroresonance have been reported for operating transmission or subtransmission systems. However, because of this concern, some utilities buying series capacitors have specified special subharmonic detection devices as part of the series capacitor bank. There are also concerns about subsynchronous resonance (SSR) of rotating machine mechanical systems with the series-compensated electrical system [47].

Copyright The Institute of Electrical and Electronics Engineers, Inc.
Provided by IHS under license with IEEE
No reproduction or networking permitted without license from IHS
Not for Resale

Additional concerns have centered on fundamental-frequency resonance conditions during faults at critical locations in the transmission systems. But economical applications of series capacitors dictate that some means be supplied to limit the overvoltage appearing across the series capacitor during faults to voltages no higher than economical design levels. Limiting this overvoltage virtually eliminates the possibility of high temporary fundamental resonant overvoltages.

The overvoltage protection for series capacitors applied to transmission systems has taken two forms. The earliest forms of overvoltage protection were spark-gap systems ([39], [44]) that limited voltage to the sparkover voltage of the gap setting, which was generally no more than 3.5 times the rated voltage across the series capacitor bank, but often less. More recently, the protection has been achieved by metal-oxide varistors ([48], [49]), somewhat similar to surge arresters but applied across the series capacitor and limiting the voltage to about two times the rated voltage across the series capacitor bank.

Both forms, when acting during a fault, can reduce temporary and transient overvoltages, the spark gap by electrically bypassing the capacitor during its arcing time, and the metal-oxide varistors by limiting the overvoltage, inherently reducing the capacitive reactance, and inserting some value of equivalent resistance into the circuit until the fault is cleared.

The effect on temporary and transient overvoltages (and the possibility of SSR) as a result of using of series compensation with its overvoltage protection should be carefully studied.

9. Bibliography

[B1] IEEE Std C37.010-1979 (Reaff 1988), IEEE Application Guide for AC High-Voltage Circuit Breakers Rated on a Symmetrical Current Basis (ANSI).

[B2] IEEE Std C62.92.2-1989, IEEE Guide for the Application of Neutral Grounding in Electrical Utility Systems, Part II—Grounding of Synchronous Generator Systems (ANSI).

[B3] IEEE Std 80-1986 (Reaff 1991), IEEE Guide for Safety in AC Substation Grounding (ANSI).

[B4] IEEE Std 100-1992, The New IEEE Standard Dictionary of Electrical and Electronics Terms.

[B5] IEEE Std 142-1982, IEEE Recommended Practice for Grounding of Industrial and Commercial Power Systems (IEEE Green Book) (ANSI).

[B6] AIEE Committee Report, “Application Guide for Ground-Fault Neutralizers,” *AIEE Transactions*, pt. III, pp. 182–190, April 1953.

[B7] AIEE Committee Report, “Report on Survey of Unbalanced Charging Currents on Transmission Lines as Affecting Ground-Fault Neutralizers,” *AIEE Transactions*, vol. 60, pt. II, pp. 1328–1339, 1949.

[B8] Brown, H. H. and Gross, E. T. B., “Experience with Resonant Grounding in a Large 34.5 kV System,” *IEEE Transactions*, vol. PAS-85, no. 5., pp. 541–547, May 1966.

[B9] Central Stations Engineers of the Westinghouse Electric Corporation, *Electrical Transmission and Distribution Reference Book*, Chapter 19, Grounding of Power System Neutrals. Raleigh, NC: Asea Brown Boveri/Transmission Technology Institute, 1950.

[B10] Gross, E. T. B. and Atherton, E. W., “Application of Resonant Grounding in Power Systems in the United States,” *AIEE Transactions*, vol. 70, pp. 389–396, 1951.

Copyright The Institute of Electrical and Electronics Engineers, Inc.
Provided by IHS under license with IEEE
No reproduction or networking permitted without license from IHS
Not for Resale

[B11] Project UHV and Transmission Engineers of General Electric, *Transmission Line Reference Book, 345 kV and Above*. Palo Alto, CA: Electric Power Research Institute, 1982.

[B12] Rudenberg, R., *Transient Performance of Electric Power Systems*. New York: McGraw-Hill Book Company, Inc., 1950.

[B13] Willheim, R. and Waters, M., *Neutral Grounding in High-Voltage Transmission*. New York: Elsevier Publishing Company, 1956.

Copyright The Institute of Electrical and Electronics Engineers, Inc.
Provided by IHS under license with IEEE
No reproduction or networking permitted without license from IHS
Not for Resale

Appendixes

(These appendixes are not a part of IEEE Std C62.92.5-1992, IEEE Guide for the Application of Neutral Grounding in Electrical Utility Systems, Part V—Transmission Systems and Subtransmission Systems, but are included for information only.)

Appendix A
Specifying a Grounding Device for a Transmission of a Subtransmission System (Examples)

A1. General

IEEE Std 32-1972 [4][1] has been applied to devices used to control the ground current or the potentials to ground of an alternating-current system. The bases for ratings for such devices include: current, voltage, frequency, basic impulse insulation level (BIL), insulation class, system circuit voltage, indoor and outdoor service conditions, and time ratings.

A1.1 Current and Time Ratings. Unless otherwise specified, the basis for the current rating shall be the thermal current; that is, the current through the neutral grounding device during a single-line-to-ground fault at the device location. Implicit in the thermal current rating is an associated continuous current, which, unless otherwise specified, bears a relationship to the thermal rating determined by the rated time of the device. The rated time (or time rating) is the time during which the device will carry its rated thermal current under standard operating conditions without exceeding the limitations established by standards [4].

Of importance also are the mechanical forces associated with fault currents, especially those forces associated with the crest of the offset current wave. In calculating such currents, subtransient reactance fault conditions are often assumed, but the results will depend on the location of the grounding device within the system.

A method of calculating the thermal current rating is given for each type of grounding device in the following subsections. In order to make this calculation, the value of the zero-sequence impedance of the grounding device and the sequence impedances of the system to a ground fault at the grounding device, as well as the system operating voltage and frequency, are needed. (For further discussion of fault current calculations, see, for example, those parts applying to line-to-ground faults in Section 5 and Appendix A of IEEE Std C37.010-1979 [B1].)

Rated times are associated with temperature rises within the grounding device when carrying rated current. IEEE Std 32-1972 [4] specifies that rated times shall be 10 s, 1 min, 10 min, and extended time. The rated-time temperature rises of extended-time devices shall be taken as the ultimate rise above the ambient resulting from the continued flow of rated thermal current (or for certain resistors, the continued application of rated voltage). According to IEEE Std 32-1972 [4], extended-time operation shall not exceed an average of 90 days per year.

A1.2 Rated Frequency. Generally, fundamental system frequency is assumed for the ratings of grounding devices; however, it should be recognized that, in certain transmission or subtransmission systems, system frequencies may be off nominal for varying periods of time. Such variations are not significant to the rating of grounding devices. Also, for some devices the rating may include the effects of additional harmonic frequencies.

[1]Many of the following subsections have been developed based on material taken directly from this reference.

Copyright The Institute of Electrical and Electronics Engineers, Inc.
Provided by IHS under license with IEEE
No reproduction or networking permitted without license from IHS
Not for Resale

A1.3 Indoor and Outdoor Service. Whether the grounding device will be operated in an indoor or an outdoor environment shall be specified. This specification is related to service conditions, which if unusual, should also be specified [4].

A1.4 System Impedances. In the following subsections, formulas are given for calculating the ratings for various types of grounding devices. These formulas are based on a simple, single-source system with a single grounding device. The system impedance values necessary to use these formulas are defined in Figs A1 and A2.

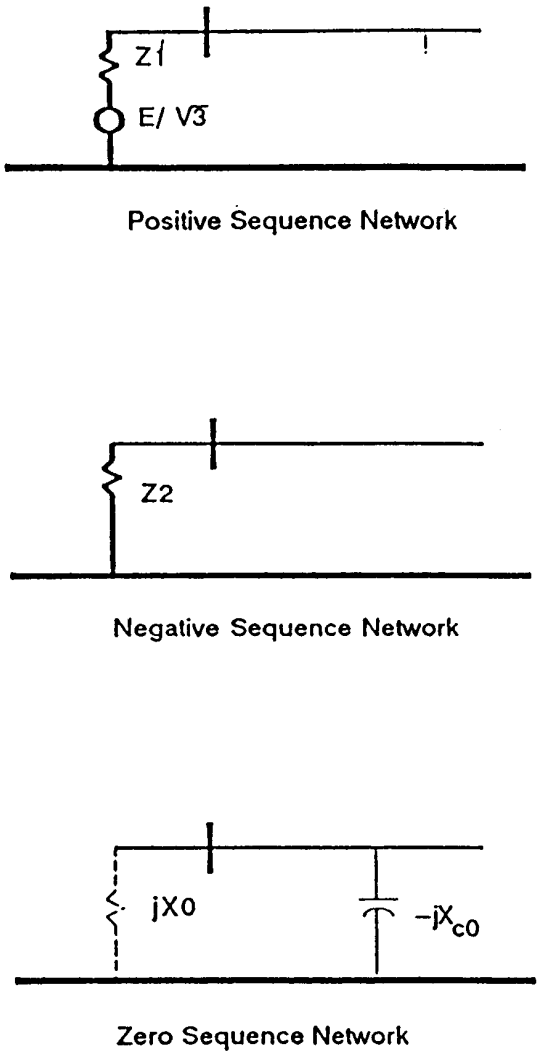

Fig A1
Sequence Components for Sizing a Grounding Transformer

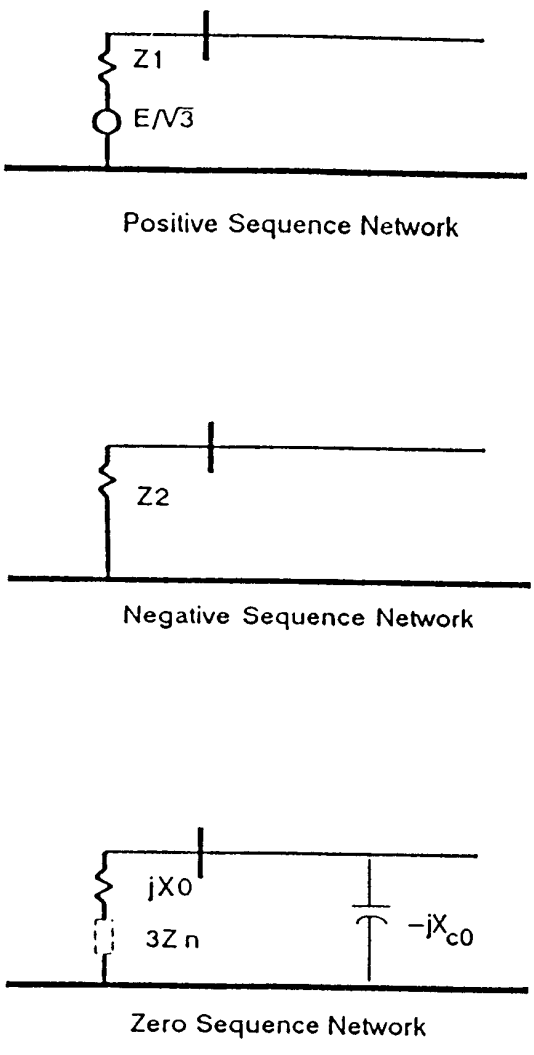

Fig A2
Sequence Components for Sizing a Neutral Impedance

Copyright The Institute of Electrical and Electronics Engineers, Inc.
Provided by IHS under license with IEEE
No reproduction or networking permitted without license from IHS
Not for Resale

In both of these figures, the system zero-sequence capacitance, X_{C0}, is shown. Prior to installing a grounding device, the system zero-sequence impedance, Z_0, is equal to $-jX_{C0}$. For most grounding device applications, it is not necessary to know this value explicitly, as long as it is known that $|X_{C0}| >> |X_0|$. The exceptions to this rule are ground fault neutralizers (GFNs) and neutral resistors for High-Resistance Grounding. For these devices, X_{C0} has to be known, since the impedance of the neutral grounding device has a definite relationship to it.

In Fig A2, the impedance $3Z_n$ represents three times the neutral grounding device and may be either $3R_n$ for a resistor or j$3X_n$ for a reactor or GFN. The reactance jX_0 represents the impedance of the grounding transformer or power transformer whose neutral is used to connect the grounding device.

For more complex systems, in which power is supplied to the network at several locations or in which there are multiple grounding devices, a short-circuit study of the network is necessary to size a grounding device. This study should include all practical operating conditions of the system in order to find the highest currents and voltages to which the grounding device may be exposed.

A2. Specifying a Grounding Transformer Bank

In order to specify the rating of a grounding transformer, the value of zero-sequence ohms of the grounding transformer (X_0) at the system frequency (f), the system line-to-line voltage rms (E), and the sequence impedances of the system to a ground fault at the grounding transformer (Z_1, Z_2, Z_0) have to be known if the fault current is to be calculated. The rating of the grounding transformer shall include the following:

(1) *Rated Current (I_t).* This is the current through the grounding transformer neutral during a ground fault at the grounding transformer location.

$$I_t = \frac{\sqrt{3}E}{2Z_1 + jX_0} \qquad \text{(Eq A1)}$$

assuming

$Z_1 = Z_2$
$|Z_0| >> |X_0|$

(2) *Rated Voltage (V).* The rated voltage of a grounding transformer is the maximum line-to-line rms voltage at which it is designed to operate continuously.

$$V = E \qquad \text{(Eq A2)}$$

(3) *Rated Frequency (f).* This is the system frequency.
(4) *Basic Impulse Insulation Level (BIL).* The line-end and ground-end insulation levels of the grounding transformer are selected as prescribed by Section 9.1 from IEEE Std 32-1972 [4].
(5) *Circuit Voltage of the System*. This is the system line-to-line rms voltage (E).
(6) *Service.* Service is either indoor or outdoor.
(7) *Rated Time.* Rated time is the time during which the grounding transformer will carry its rated current (I_t), and is either (as defined by standards) 10 s, 1 min, 10 min, or extended time.

NOTE: A short-time kilovoltampere rating also has sometimes been applied to grounding transformers, which is equal to the product of the rated voltage divided by $\sqrt{3}$ (i.e., the system *line-to-ground* voltage) times the rated neutral current in kiloamperes.

Copyright The Institute of Electrical and Electronics Engineers, Inc.
Provided by IHS under license with IEEE
No reproduction or networking permitted without license from IHS
Not for Resale

A3. Specifying a Neutral Grounding Resistor

In order to specify the rating of a neutral grounding resistor, the value of its resistance at 25 °C (R_n), the system line-to-line voltage (E), the system frequency (f), and the sequence impedances to a ground fault at the resistor location (Z_1, Z_2, and Z_0) have to be known if the fault current is to be calculated. The rating of the resistor shall include the following:

(1) *Rated Current (I_t).* This is the current through the resistor during a ground fault at the resistor location.

$$I_t = \frac{\sqrt{3}E}{Z_1 + Z_2 + jX_0 + 3R_n} \quad \text{(Eq A3)}$$

$$I_t = \frac{\sqrt{3}E}{2Z_1 + jX_0 + 3R_n} \quad \text{(Eq A4)}$$

when

$X_{C0} >> X_0$
$X_{C0} \approx |Z_0|$

and if

$Z_1 = Z_2$
$|Z_0| >> 3R_n$

(2) *Rated Voltage (V).* This is the product of the resistor current and resistance at 25 °C (R_n), unless this value exceeds 80% of the system line-to-neutral voltage. Then the resistor shall be rated equal to the system line-to-neutral voltage [4]:

$$V = I_t \cdot R_n \quad \text{(Eq A5)}$$

unless

$$(I_t \cdot R_n) \geq 0.8\frac{E}{\sqrt{3}} \quad \text{(Eq A6)}$$

then

$$V = \frac{E}{\sqrt{3}} \quad \text{(Eq A7)}$$

(3) *Rated Frequency (f).* This is the system frequency.
(4) *Basic Impulse Insulation Level (BIL).* The line-end and ground-end insulation level of the resistor are selected from Table 4 of IEE Std 32-1972 [4] on the basis of the fault voltage ($I_t \cdot R_n$) criteria, in columns 3 and 4 of IEEE Std 32-1972 [4].
(5) *Circuit Voltage of the System (E).* This is the system line-to-line rms voltage.
(6) *Service.* Service is either indoor or outdoor.
(7) *Rated Time.* Rated time is the time during which the resistor will carry its rated thermal current (I_t), and it shall be either 10 s, 1 min, 10 min, or extended time.

Copyright The Institute of Electrical and Electronics Engineers, Inc.
Provided by IHS under license with IEEE
No reproduction or networking permitted without license from IHS
Not for Resale

A4. Specifying a Neutral Grounding Reactor

In order to specify the rating of a neutral grounding reactor, the value of its reactance (X_n), the system frequency (f), the system line-to-line rms voltage (E), and the sequence impedances to a ground fault at the reactor location (Z_1, Z_2, Z_0) have to be known if the fault current is to be calculated. The rating of the reactor shall include the following:

(1) *Rated Current (I_t).* This is the current through the reactor during a ground fault at the reactor location.

$$I_t = \frac{\sqrt{3}E}{Z_1 + Z_2 + jX_0 + j3X_n} \quad \text{(Eq A8)}$$

or

$$I_t = \frac{\sqrt{3}E}{2Z_1 + j(X_0 + 3X_n)} \quad \text{(Eq A9)}$$

if

$Z_1 = Z_2$
$X_{C0} >> (X_0 + 3X_n)$

(2) *Rated Voltage (V).* This is the product of the reactor current and reactance X_n of the reactor at system frequency. This voltage shall be as specified in Table 4 of IEEE Std 32-1972 [4].

$$V = I_t \cdot X_n \quad \text{(Eq A10)}$$

(3) *Frequency (f).* This is the system frequency.
(4) *Basic Impulse Insulation Level (BIL).* The BIL of the neutral reactor is as specified in Table 4 of IEEE Std 32-1972 [4]. See also Section 3.8.3 of IEEE Std C62.2-1987 [6], or IEEE Std C62.11-1987 [7].
(5) *Circuit Voltage of the System (E).* This is the system line-to-line rms voltage.
(6) *Insulation.* Insulation is oil, dry, or gas insulated.
(7) *Service.* Service is either indoor or outdoor.
(8) *Rated Time.* Rated time is the time during which the reactor will carry its rated thermal current (I_t), and it shall be either 10 s, 1 min, 10 min, or extended time.

A5. Specifying a Ground-Fault Neutralizer[2]

In order to specify the rating of a GFN, the following has to be known or determined: the value of its reactance (X_{GFN}), the system line-to-line voltage (E) at the system frequency (f), the zero-sequence series inductive reactance of the system at the GFN location (X_0), and the zero-sequence shunt capacitive reactance of the system at the GFN location, (X_{C0}). The rating of the GFN shall include the following:

[2]For other considerations in the specification and in the application of GFNs, attention is directed to the appropriate references given in Section 9.

Copyright The Institute of Electrical and Electronics Engineers, Inc.
Provided by IHS under license with IEEE
No reproduction or networking permitted without license from IHS
Not for Resale

(1) *Reactance.* For exact tuning, the reactance (X_{GFN}) of the GFN shall be such that $3X_{GFN}$ plus the zero-sequence inductive reactance of the system (X_0) shall equal the zero-sequence capacitive reactance of the system (X_{C0}) or

$$3X_{GFN} + X_0 = X_{C0} \quad \text{(Eq A11)}$$

or

$$X_{GFN} = \frac{X_{C0} - X_0}{3} \quad \text{(Eq A12)}$$

NOTE: $X_{GFN} = X_n$ of A1.4.)

Since the system and its X_{C0} are subject to change, off-load taps are sometimes incorporated for retuning X_{GFN} to the appropriate X_{C0}.

(2) *Rated Voltage (V).* The rated voltage applied to the GFN in volts will be approximately the system phase-to-neutral voltage, or

$$V = \frac{E}{\sqrt{3}} \quad \text{(Eq A13)}$$

(3) *Rated Current (I_t).* This will be the current through the GFN during a ground fault.

$$I_t = \frac{\frac{E}{\sqrt{3}}}{X_{GFN}} \quad \text{(Eq A14)}$$

(4) *Rated Frequency (f).* This is the system frequency.
(5) *Basic Impulse Insulation Level (BIL).* The BIL is determined similar to that for a neutral reactor, that is, according to Table 4 of IEEE Std 32-1972 [4]. See also Section 3.8.3 of IEEE Std C62.2-1987 [6], or IEEE Std C62.11-1987 [7].
(6) *Circuit Voltage of the System (E).* This is the system line-to-line rms voltage.
(7) *Insulation*. Insulation is oil, dry, or gas insulated.
(8) *Service.* Service is either indoor or outdoor.
(9) *Rated Time.* Rated time is the time during which the GFN will carry its rated thermal current (I_t), which is either 10 s, 1 min, 10 min, or extended time. Where it is intended to maintain operation with a sustained ground fault, extended time rating should be used. Where operation with a sustained ground fault is not contemplated, a 10 min rating has been used.

Copyright The Institute of Electrical and Electronics Engineers, Inc.
Provided by IHS under license with IEEE
No reproduction or networking permitted without license from IHS
Not for Resale

Appendix B
Zero-Sequence Impedance Equivalent Circuit for an Autotransformer With an Impedance-Grounded Neutral and a Delta-Connected Tertiary

Fig B2 shows the zero-sequence impedance equivalent circuit between the high- and medium-voltage terminals for an autotransformer, Fig B1, with a reactor connected in the neutral of the common winding. A delta-connected tertiary is also present, providing an additional circuit into which zero-sequence currents can flow, and therefore affecting the zero-sequence impedances of the equivalent. The zero-sequence impedances of the transformer itself are assumed equal to the positive-sequence impedances.

The impedances are derived on the bases of the medium voltage circuit line-to-line, kV_M, and three-phase, kVA_M (or MVA_M).

$$Z_B = \frac{(kV_M)^2}{MVA_M} = \frac{1000(kV_M)^2}{kVA_M} \text{ (ohms)} \quad \text{(Eq B1)}$$

For a neutral impedance of Z_N ohms, in per unit or in percent of the base, Z_B:

$$Z'_N = \frac{Z_N}{Z_B} \text{ (per unit)} \quad \text{(Eq B2)}$$

and

$$Z'_N = \frac{Z_N}{Z_B} \cdot 100 \text{ (in percent)} \quad \text{(Eq B3)}$$

or

$$Z'_N \text{ (percent)} = \frac{Z_N}{\left(\frac{10kV_M^2}{kVA_M}\right)} \quad \text{(Eq B4)}$$

The zero-sequence equivalent circuit (Fig B2) consists of impedances Z_{NH}, Z_{NM}, and Z_{NT} to be added to the zero-sequence impedances of the windings of the transformer, Z_H, Z_M, and Z_T, where:

$$Z_H = \frac{1}{2}(Z_{HM} + Z_{HT} - Z_{MT}) \quad \text{(Eq B5)}$$

$$Z_M = \frac{1}{2}(Z_{HM} + Z_{MT} - Z_{HT}) \quad \text{(Eq B6)}$$

$$Z_T = \frac{1}{2}(Z_{MT} + Z_{HT} - Z_{HM}) \quad \text{(Eq B7)}$$

with Z_{HM}, Z_{MT}, and Z_{HT} all in percent on the same bases.[3]

[3]Equivalent circuits are also given for other transformer winding connections with impedance neutral grounding in the *Electrical Transmission and Distribution Reference Book*, p. 799 [33].

Copyright The Institute of Electrical and Electronics Engineers, Inc.
Provided by IHS under license with IEEE
No reproduction or networking permitted without license from IHS
Not for Resale

With the M-voltage circuit as the base, define:

$$K = \frac{kV_M}{kV_H} \quad \text{(Eq B8)}$$

where

kV_H = The line-to-line voltage at the H terminal

Then, with Z_N' in percent:

$$Z_{NH} = 3(K^2 - K)Z_N' \text{ (in percent)} \quad \text{(Eq B9)}$$

$$Z_{NM} = 3(1 - K)Z_N' \text{ (in percent)} \quad \text{(Eq B10)}$$

$$Z_{NT} = 3KZ_N' \text{ (in percent)} \quad \text{(Eq B11)}$$

Copyright The Institute of Electrical and Electronics Engineers, Inc.
Provided by IHS under license with IEEE
No reproduction or networking permitted without license from IHS
Not for Resale

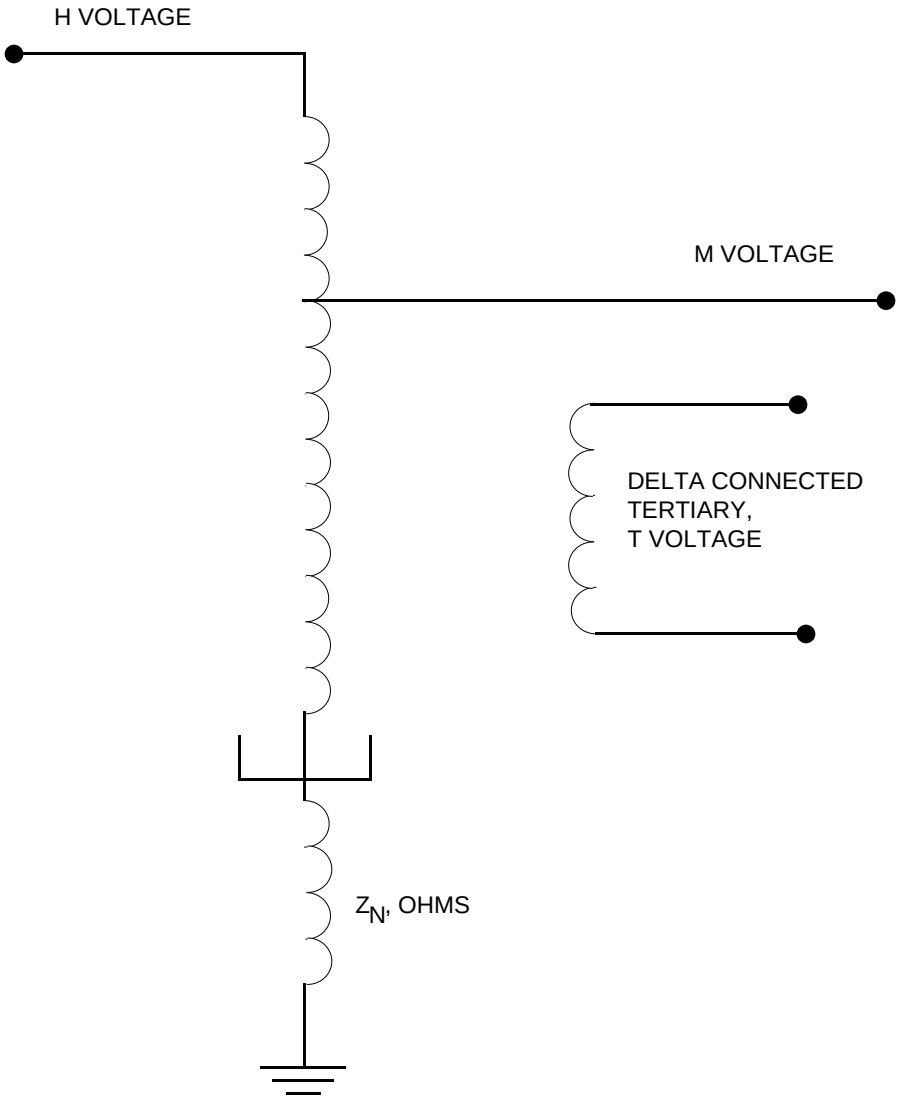

Fig B1
Three-Phase Autotransformer With Neutral Impedance and a Delta-Connected Tertiary

Copyright The Institute of Electrical and Electronics Engineers, Inc.
Provided by IHS under license with IEEE
No reproduction or networking permitted without license from IHS
Not for Resale

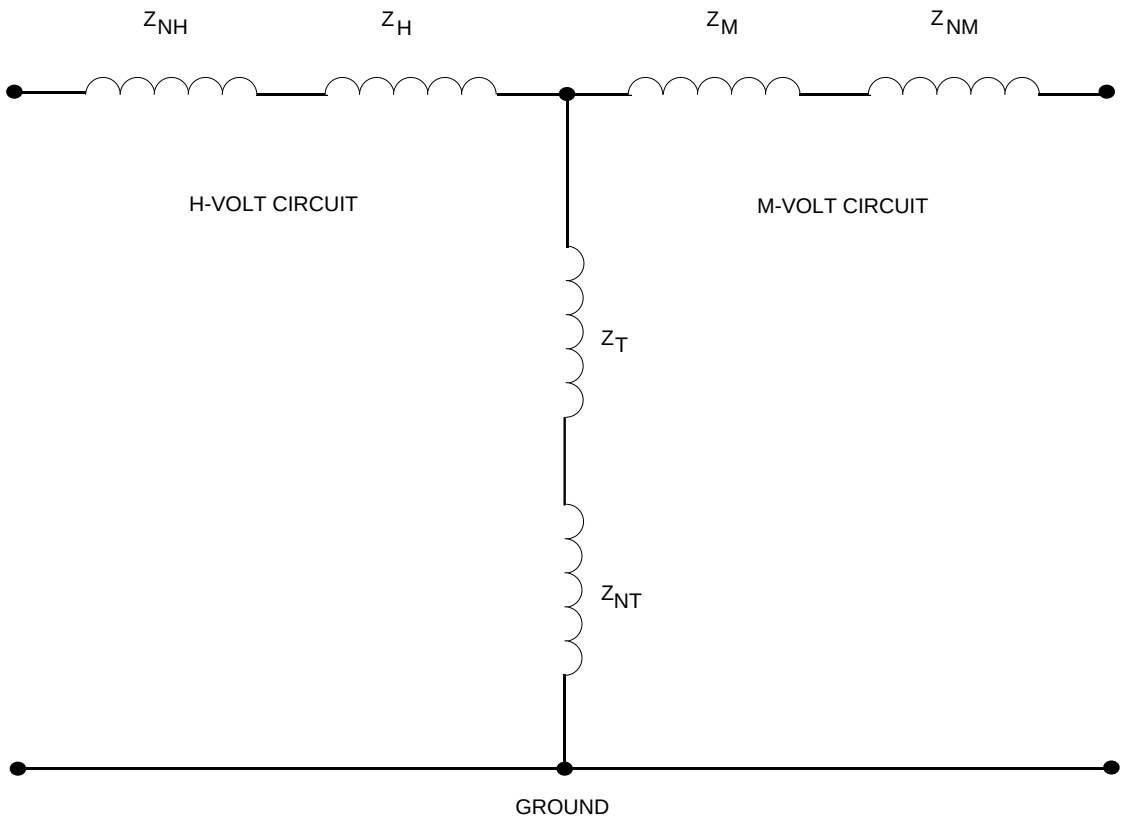

Fig B2
Zero-Sequence Impedance Equivalent Circuit for an Autotransformer

Copyright The Institute of Electrical and Electronics Engineers, Inc.
Provided by IHS under license with IEEE
No reproduction or networking permitted without license from IHS
Not for Resale