Recognized as an
American National Standard (ANSI)

IEEE Std C62.92.2™-1989 (R2005)

IEEE Guide for the Application of Neutral Grounding in Electrical Utility Systems Part II-Grounding of Synchronous Generator Systems

Sponsor

Surge Protective Devices Committee
of the
IEEE Power Engineering Society

Reaffirmed October 30, 2000
Approved October 13, 1989

American National Standards Institute

Reaffirmed June 9, 2005
Approved February 2, 1989

IEEE-SA Standards Board

Copyright © 1989 by

The Institute of Electrical and Electronics Engineers, Inc.

3 Park Avenue, New York, NY 10016-5997, USA

No part of this publication may be reproduced in any form, in an electronic retrieval system or otherwise, without the prior written permission of the publisher.

--`,,`,`-`-`,,`,,`,`,,`---

Copyright The Institute of Electrical and Electronics Engineers, Inc.
Provided by IHS under license with IEEE
No reproduction or networking permitted without license from IHS

Not for Resale

IEEE Standards documents are developed within the IEEE Societies and the Standards Coordinating Committees of the IEEE Standards Association (IEEE-SA) Standards Board. The IEEE develops its standards through a consensus development process, approved by the American National Standards Institute, which brings together volunteers representing varied viewpoints and interests to achieve the final product. Volunteers are not necessarily members of the Institute and serve without compensation. While the IEEE administers the process and establishes rules to promote fairness in the consensus development process, the IEEE does not independently evaluate, test, or verify the accuracy of any of the information contained in its standards.

Use of an IEEE Standard is wholly voluntary. The IEEE disclaims liability for any personal injury, property or other damage, of any nature whatsoever, whether special, indirect, consequential, or compensatory, directly or indirectly resulting from the publication, use of, or reliance upon this, or any other IEEE Standard document.

The IEEE does not warrant or represent the accuracy or content of the material contained herein, and expressly disclaims any express or implied warranty, including any implied warranty of merchantability or fitness for a specific purpose, or that the use of the material contained herein is free from patent infringement. IEEE Standards documents are supplied "**AS IS**."

The existence of an IEEE Standard does not imply that there are no other ways to produce, test, measure, purchase, market, or provide other goods and services related to the scope of the IEEE Standard. Furthermore, the viewpoint expressed at the time a standard is approved and issued is subject to change brought about through developments in the state of the art and comments received from users of the standard. Every IEEE Standard is subjected to review at least every five years for revision or reaffirmation. When a document is more than five years old and has not been reaffirmed, it is reasonable to conclude that its contents, although still of some value, do not wholly reflect the present state of the art. Users are cautioned to check to determine that they have the latest edition of any IEEE Standard.

In publishing and making this document available, the IEEE is not suggesting or rendering professional or other services for, or on behalf of, any person or entity. Nor is the IEEE undertaking to perform any duty owed by any other person or entity to another. Any person utilizing this, and any other IEEE Standards document, should rely upon the advice of a competent professional in determining the exercise of reasonable care in any given circumstances.

Interpretations: Occasionally questions may arise regarding the meaning of portions of standards as they relate to specific applications. When the need for interpretations is brought to the attention of IEEE, the Institute will initiate action to prepare appropriate responses. Since IEEE Standards represent a consensus of concerned interests, it is important to ensure that any interpretation has also received the concurrence of a balance of interests. For this reason, IEEE and the members of its societies and Standards Coordinating Committees are not able to provide an instant response to interpretation requests except in those cases where the matter has previously received formal consideration. At lectures, symposia, seminars, or educational courses, an individual presenting information on IEEE standards shall make it clear that his or her views should be considered the personal views of that individual rather than the formal position, explanation, or interpretation of the IEEE.

Comments for revision of IEEE Standards are welcome from any interested party, regardless of membership affiliation with IEEE. Suggestions for changes in documents should be in the form of a proposed change of text, together with appropriate supporting comments. Comments on standards and requests for interpretations should be addressed to:

Secretary, IEEE-SA Standards Board

445 Hoes Lane

Piscataway, NJ 08854

USA

NOTE—Attention is called to the possibility that implementation of this standard may require use of subject matter covered by patent rights. By publication of this standard, no position is taken with respect to the existence or validity of any patent rights in connection therewith. The IEEE shall not be responsible for identifying patents for which a license may be required by an IEEE standard or for conducting inquiries into the legal validity or scope of those patents that are brought to its attention.

Authorization to photocopy portions of any individual standard for internal or personal use is granted by the Institute of Electrical and Electronics Engineers, Inc., provided that the appropriate fee is paid to Copyright Clearance Center. To arrange for payment of licensing fee, please contact Copyright Clearance Center, Customer Service, 222 Rosewood Drive, Danvers, MA 01923 USA; +1 978 750 8400. Permission to photocopy portions of any individual standard for educational classroom use can also be obtained through the Copyright Clearance Center.

--`,,`,`-`-`,,`,,`,`,,`---

Copyright The Institute of Electrical and Electronics Engineers, Inc.
Provided by IHS under license with IEEE
No reproduction or networking permitted without license from IHS

Not for Resale

Introduction

(This introduction in not part of IEEE Std XXX-200X, IEEE Standard for...).

This document defines ....

Notice to users

Errata

Errata, if any, for this and all other standards can be accessed at the following URL: http://standards.ieee.org/reading/ieee/updates/errata/index.html. Users are encouraged to check this URL for errata periodically.

Interpretations

Current interpretations can be accessed at the following URL: http://standards.ieee.org/reading/ieee/interp/index.html.

Patents

[The following notice shall appear when the IEEE receives assurance from a known patent holder or patent applicant prior to the time of publication that a license will be made available to all applicants either without compensation or under reasonable rates, terms, and conditions that are demonstrably free of any unfair discrimination.]

Attention is called to the possibility that implementation of this standard may require use of subject matter covered by patent rights. By publication of this standard, no position is taken with respect to the existence or validity of any patent rights in connection therewith. The IEEE shall not be responsible for identifying patents or patent applications for which a license may be required to implement an IEEE standard or for conducting inquiries into the legal validity or scope of those patents that are brought to its attention. A patent holder or patent applicant has filed a statement of assurance that it will grant licenses under these rights without compensation or under reasonable rates and nondiscriminatory, reasonable terms and conditions to applicants desiring to obtain such licenses. The IEEE makes no representation as to the reasonableness of rates, terms, and conditions of the license agreements offered by patent holders or patent applicants. Further information may be obtained from the IEEE Standards Department.

[If the IEEE has not received letters of assurance prior to the time of publication, the following notice shall appear:]

Attention is called to the possibility that implementation of this standard may require use of subject matter covered by patent rights. By publication of this standard, no position is taken with respect to the existence or validity of any patent rights in connection therewith. The IEEE shall not be responsible for identifying patents or patent applications for which a license may be required to implement an IEEE standard or for conducting inquiries into the legal validity or scope of those patents that are brought to its attention.

Copyright © 2005 IEEE. All rights reserved.

Copyright The Institute of Electrical and Electronics Engineers, Inc.
Provided by IHS under license with IEEE
No reproduction or networking permitted without license from IHS
Not for Resale

Participants

The following is a list of participants in the ... Working Group.

Abraham Lincoln, *Chair*
Thomas Jefferson, *Vice-Chair*

The following members of the [individual, entity, or individual and entity] balloting committee voted on this standard. Balloters may have voted for approval, disapproval, or abstention.

Copyright © 2005 IEEE. All rights reserved.

Copyright The Institute of Electrical and Electronics Engineers, Inc.
Provided by IHS under license with IEEE
No reproduction or networking permitted without license from IHS
Not for Resale

When the IEEE-SA Standards Board approved this standard on XX Month 200X, it had the following membership:

Don Wright, *Chair*
Steve M. Mills, *Vice Chair*
Judith Gorman, *Secretary*

Chuck Adams
Stephen Berger
Mark D. Bowman
Joseph A. Bruder
Bob Davis
Roberto de Marca Boisson
Julian Forster*
Arnold M. Greenspan
Mark S. Halpin
Raymond Hapeman
Richard J. Holleman
Richard H. Hulett
Lowell G. Johnson
Joseph L. Koepfinger*
Hermann Koch
Thomas J. McGean
Daleep C. Mohla
Paul Nikolich
T. W. Olsen
Ronald C. Petersen
Gary S. Robinson
Frank Stone
Malcolm V. Thaden
Doug Topping
Joe D. Watson

*Member Emeritus

Also included are the following nonvoting IEEE-SA Standards Board liaisons:

Satish K. Aggarwal, *NRC Representative*
Richard DeBlasio, *DOE Representative*
Alan Cookson, *NIST Representative*

Your Name Here
IEEE Standards Project Editor

Copyright © 2005 IEEE. All rights reserved.

Copyright The Institute of Electrical and Electronics Engineers, Inc.
Provided by IHS under license with IEEE
No reproduction or networking permitted without license from IHS
Not for Resale

Contents

Copyright © 2005 IEEE. All rights reserved.

Copyright The Institute of Electrical and Electronics Engineers, Inc.
Provided by IHS under license with IEEE
No reproduction or networking permitted without license from IHS

Not for Resale

IEEE Standards documents are developed within the Technical Committees of the IEEE Societies and the Standards Coordinating Committees of the IEEE Standards Board. Members of the committees serve voluntarily and without compensation. They are not necessarily members of the Institute. The standards developed within IEEE represent a consensus of the broad expertise on the subject within the Institute as well as those activities outside of IEEE which have expressed an interest in participating in the development of the standard.

Use of an IEEE Standard is wholly voluntary. The existence of an IEEE Standard does not imply that there are no other ways to produce, test, measure, purchase, market, or provide other goods and services related to the scope of the IEEE Standard. Furthermore, the viewpoint expressed at the time a standard is approved and issued is subject to change brought about through developments in the state of the art and comments received from users of the standard. Every IEEE Standard is subjected to review at least every five years for revision or reaffirmation. When a document is more than five years old, and has not been reaffirmed, it is reasonable to conclude that its contents, although still of some value, do not wholly reflect the present state of the art. Users are cautioned to check to determine that they have the latest edition of any IEEE Standard.

Comments for revision of IEEE Standards are welcome from any interested party, regardless of membership affiliation with IEEE. Suggestions for changes in documents should be in the form of a proposed change of text, together with appropriate supporting comments.

Interpretations: Occasionally questions may arise regarding the meaning of portions of standards as they relate to specific applications. When the need for interpretations is brought to the attention of IEEE, the Institute will initiate action to prepare appropriate responses. Since IEEE Standards represent a consensus of all concerned interests, it is important to ensure that any interpretation has also received the concurrence of a balance of interests. For this reason IEEE and the members of its technical committees are not able to provide an instant response to interpretation requests except in those cases where the matter has previously received formal consideration.

Comments on standards and requests for interpretations should be addressed to:

Secretary, IEEE Standards Board
P.O. Box 1331
445 Hoes Lane
Piscataway, NJ 08855-1331
USA

IEEE Standards documents are adopted by the Institute of Electrical and Electronics Engineers without regard to whether their adoption may involve patents on articles, materials, or processes. Such adoption does not assume any liability to any patent owner, nor does it assume any obligation whatever to parties adopting the standards documents.

Copyright The Institute of Electrical and Electronics Engineers, Inc.
Provided by IHS under license with IEEE
No reproduction or networking permitted without license from IHS
Not for Resale

Foreword

(This Foreword is not a part of IEEE C62.92.2-1989, IEEE Guide for the Application of Neutral Grounding in Electrical Utility Systems, Part II—Grounding of Synchronous Generator Systems.)

This guide is the second in a series of documents on neutral grounding in electric utility systems. Part II covers the considerations and practices relating to the grounding of synchronous generator systems.

Emphasis in this guide is to be directed toward the grounding of synchronous generator systems in electric utility systems. Generator grounding practices used in industrial systems are covered in other guides and standards.

At the time this guide was approved, the Working Group for Part II had the following membership:

S. G. Whisenant, *Chair*

S. Mazumdar	D. W. Jackson	E. R. Taylor, Jr.
W. S. Ossman	I. B. Johnson	O. Nigol J. R. Detweiler
G. S. Haralampu	J. L. Koepfinger	

The following persons were on the balloting committee that approved this document for submission to the IEEE Standards Board:

R. D. Ball	W. W. Hines	R. Odenberg
C. L. Ballentine	D. W. Jackson	J. C. Osterhout
G. D. Breuer	R. A. Jones	M. Parente
J. J. Burke	S. S. Kershaw	S. A. Potocny
J. G. Dalton	J. L. Koepfinger	R. Richman
D. C. Dawson	S. Kuznetsov	E. Rothong
R. W. Flugum	G. E. Lee	K. B. Stump
H. E. Foelker	F. Lembo, Jr.	L. D. Sweeney
G. L. Gaibrois	D. W. Lenk	A. Sweetana
E. A. Goodman	W. A. Maguire	D. P. Symanski
R. Haas	J. A. Mambuea	E. R. Taylor, Jr.
C. D. Hansell	E. H. Marrow, Jr.	A. C. Westrom
G. S. Haralampu	F. D. Martzloff	S. G. Whisenant
D. E. Hedman	D. J. Melvold	E. J. Yasuda
J. A. Hetrick	J. J. Napiorkowski	
A. R. Hileman	O. Nigol	

When the IEEE Standards Board approved this standard on February 2, 1989, it had the following membership:

Dennis Bodson, *Chair*
Marco W. Migliaro, *Vice Chair*
Andrew G. Salem, *Secretary*

Arthur A. Blaisdell	Kenneth D. Hendrix	Lawrence V. McCall
Fletcher J. Buckley	Theodore W. Hissey, Jr.	L. Brace McClung
Allen L. Clapp	John W. Horch	Donald T. Michael*
James M. Daly	David W. Hutchins	Richard E. Mosher
Stephen R. Dillon	Frank D. Kirschner	Stig Nilsson
Donald C. Fleckenstein	Frank C. Kitzantides	L. John Rankine
Eugene P. Fogarty	Joseph L. Koepfinger*	Gary S. Robinson
Jay Forster*	Edward Lohse	Donald W. Zipse
Thomas L. Hannan	John E. May, Jr.	

*Member Emeritus

--`,,`,,`-`-`,,`,,`,`,,`---

Copyright The Institute of Electrical and Electronics Engineers, Inc.
Provided by IHS under license with IEEE
No reproduction or networking permitted without license from IHS
Not for Resale

CLAUSE PAGE

1. Scope and References 1

1.1 Scope 1
1.2 References 1

2. Objectives of Generator Grounding 3

2.1 Minimizing Damage for Internal Ground Faults 3
2.2 Limiting Mechanical Stress in the Generator for External Ground Faults 4
2.3 Limiting Overvoltages on Generator Insulation 4
2.4 Providing a Means of Generator System Ground-Fault Protection 8
2.5 Coordinating with the Other Apparatus at Generator Voltage Level 8

3. Generator Grounding Types 9

3.1 Unit-Connected Generation Systems 9
3.2 Common Bus Generators without Feeders 13
3.3 Generators with Feeders Directly Connected at Generated Voltage 15
3.4 Three-Phase, 4-Wire Connected Generators 16

4. Bibliography 16

Annex A (Informative) Example of High-Resistance Grounding 18

Annex B (Informative) Resonant Grounding of a Unit-Connected Generator System 22

Copyright The Institute of Electrical and Electronics Engineers, Inc.
Provided by IHS under license with IEEE
No reproduction or networking permitted without license from IHS Not for Resale

IEEE Guide for the Application of Neutral Grounding in Electrical Utility Systems Part II—Grounding of Synchronous Generator Systems

1. Scope and References

1.1 Scope

This section summarizes the general considerations in grounding synchronous generator systems and discusses the factors to be considered in the selection of a grounding class and the application of grounding methods. The guidelines apply to both the large and small generators found in electric utility systems.

It should be borne in mind by the user that this report is intended solely as a guide. Statements are necessarily of a general nature and, therefore, do not take into account the requirements of special situations that can differ considerably from those discussed.

1.2 References

The following publications should be used in conjunction with this guide:

[1] ANSI C50.10-1977, General Requirements for Synchronous Machines.[1]

[2] ANSI C50.12-1981, Requirements for Salient Pole Synchronous Generators and Generator/Motors for Hydraulic Turbine Applications.

[3] ANSI C50.13-1977, Requirements for Cylindrical Rotor Synchronous Generators.

[4] ANSI/IEEE C37.101-1985, Guide for Generator Ground Protection.[2]

[1]ANSI publications are available from the Sales Department, American National Standards Institute, 1430 Broadway, New York, NY 10018.
[2]ANSI/IEEE publications are available from the Institute of Electrical and Electronics Engineers, Service Center, 445 Hoes Lane, Piscataway, NJ 08855-1331, or from the Sales Department, American National Standards Institute, 1430 Broadway, New York, NY 10018.

Copyright The Institute of Electrical and Electronics Engineers, Inc.
Provided by IHS under license with IEEE
No reproduction or networking permitted without license from IHS
Not for Resale

[5] ANSI/IEEE C62.2-1987, Guide for Application of Gapped Silicon-Carbide Surge Arresters for Alternating Current Systems.

[6] ANSI/IEEE C62.92-1987, Guide for the Application of Neutral Grounding in Electrical Utility Systems, Part I—Introduction.

[7] ANSI/IEEE Std 95-1977 (R1982), Recommended Practice for Insulation Testing of Large AC Rotating Machinery with High Direct Voltage.

[8] ANSI/IEEE Std 433-1974 (R1985), Recommended Practice for Insulation Testing of Large AC Rotating Machinery with High Voltage at Very Low Frequency.

[9] ANSI/IEEE Std 519-1981, Guide for the Harmonic Control and Reactive Compensation of Static Power Converters.

[10] ANSI/NFPA 70-1987, National Electrical Code.[3]

[11] AIEE COMMITTEE REPORT. Relay Protection of A–C Generators. *AIEE Transactions on Power Apparatus and Systems*, vol PAS-70, 1951, pp 275–282.

[12] ALLEN, J. E. and WALDORF, S. K. Arcing Ground Tests on a Normally Ungrounded 13kV 3-Phase Bus, *AIEE Transactions on Power Apparatus and Systems*, vol 65, 1946, pp 298–306.

[13] BERDY, J., CRENSHAW, M. L., and TEMOSHOK, M. “Protection of Large Steam Turbine-Generators During Abnormal Operating Conditions,” General Electric Company, GER-2811, 1972.

[14] BROWN, P. G. “Generator Neutral Grounding,” General Electric Company, GET 1941, 1953, pp 12–17.

[15] BROWN, P. G., JOHNSON, I. B, and STEVENSON, J. R. Generator Neutral Grounding, Some Aspects of Application for Distribution Transformer with Secondary Resistor and Resonant Types, *IEEE Transactions on Power Apparatus and Systems*, vol PAS-97, no 3, May/June 1979, pp 683–694.

[16] DANN, W. M. and MONTSINGER, V. M. Overloading of Power Transformers, *AIEE Transactions on Power Apparatus and Systems*, Oct 1934, p 1353.

[17] EATON, J. R., PECK, J. K., and DUNHAM, J. M. Experimental Studies of Arcing Faults on a 75kV Transmission System, *AIEE Transactions on Power Apparatus and Systems*, vol 50, 1931, pp 1467–1479.

[18] GRIFFEN, C. H. and POPE, J. W. Generator Ground Fault Protection Using Overcurrent, Overvoltage, and Undervoltage Relays, *IEEE Transactions on Power Apparatus and Systems*, vol PAS-101, no 12, Dec 1982, p 4491.

[19] GROSS, E. T. B. “Sensitive Generator Ground Fault Protection,” *Proceedings of the American Power Conference*, vol 36, 1974, p 1034.

[20] GROSS, E. T. B. and GULACHENSKI, E. M. Experience of the New England Electric System with Generator Protection by Resonant Neutral Grounding, *IEEE Transactions on Power Apparatus and Systems*, vol PAS-92, July/Aug 1973, pp 1186–1194.

[21] GULACHENSKI, E. M. and COURVILLE, E. W. New England's 30 Years of Experience with Resonant Neutral Grounding of Unit-Connected Generators, *IEEE Transactions on Power Apparatus and Systems*, Sep 1984, pp 2572–2578.

[3] NFPA documents are published by the National Fire Protection Association, Publications Sales Division, Batterymarch Park, Quincy, MA 02269. Copies are also available from the Sales Department of the American National Standards Institute, 1430 Broadway, New York, NY 10018.

--`,,`,,`-`-`,,`,,`,`,,`---

Copyright © 1989 IEEE All Rights Reserved

Copyright The Institute of Electrical and Electronics Engineers, Inc.
Provided by IHS under license with IEEE
No reproduction or networking permitted without license from IHS Not for Resale

[22] IEEE COMMITTEE REPORT. Potential Transformer Application on Unit-Connected Generators, *IEEE Transactions on Power Apparatus and Systems*, 1972, pp 24–28.[4]

[23] KHUNKHUN, K. J. S., KOEPFINGER, J. L., and HADDED, M. V. Resonant Grounding (Ground Fault Neutralizer) of a Unit Connected Generator. *IEEE Transactions on Power Apparatus and Systems*, vol PAS-96, no 2, Mar/Apr 1977, pp 550–559.

[24] PETERSON, H. A. *Transients in Power Systems*, Dover Publication, New York, 1951.

[25] RAJK, M. N. Ground-Fault Protection of Unit-Connected Generators. *AIEE Transactions on Power Apparatus and Systems*, vol PAS-77, part III, 1958, pp 1082–1094.

[26] TEICHMAN, H. T. Improved Maintenance Approach for Large Generator Armature Windings Subject to Insulation Migration. *IEEE Transactions on Power Apparatus and Systems*, vol PAS-92, 1973, pp 1234–1238.

2. Objectives of Generator Grounding

The principle objective of grounding a synchronous generator system is the protection of the generator and associated equipment against damage caused by abnormal electrical conditions. The specific objectives in the protection of the generator are as follows:

1) Minimizing damage for internal ground faults.
2) Limiting mechanical stress in the generator for external ground faults.
3) Limiting TOVs (temporary overvoltages) and transient overvoltages on the generator insulation.
4) Providing a means of generator system ground fault detection.
5) Coordinating the protection of the generator with the requirements of other equipment connected at generator voltage level.

The choice of grounding class is largely determined by the relative importance to the user of each of the above objectives. The degree to which each of the possible grounding methods accomplishes the desired objectives is discussed in the following paragraphs.

2.1 Minimizing Damage for Internal Ground Faults

It has been concluded from field investigations of generator failures that limiting ground current magnitudes/durations during internal line-to-ground faults is no guarantee that core damage will be completely eliminated [11], [26].[5] However, there is an indication that low-fault currents and fast-fault clearing will minimize core damage since iron burning and damage depend mainly on core current magnitude and duration. The energy generated in a fault is equal to I^2R_ft, where R_f is the fault resistance. This relationship indicates that a reduction in current will have a greater reduction in fault-heating damage than a proportional reduction in time. However, the energy generated by an arcing fault will not be reduced by the square of the reduced current as implied by the equation. It will reduce more slowly because the arcing fault resistance is neither constant nor linear [25].

The available classes of grounding may be ranked as follows in approximate order of increasing fault current:

1) Resonant grounded
2) Ungrounded
3) High-resistance grounded

[4] IEEE publications are available from IEEE Service Center, 445 Hoes Lane, Piscataway, NY 08855-1331.
[5] The numbers in brackets correspond to those of the references listed in 1.2.

Copyright © 1989 IEEE All Rights Reserved

Copyright The Institute of Electrical and Electronics Engineers, Inc.
Provided by IHS under license with IEEE
No reproduction or networking permitted without license from IHS Not for Resale

4) Low-resistance grounded
5) Low-inductance grounded
6) Effectively grounded

It should be noted that the ground-fault current depends not only on the generator grounding, but also on other sources of ground current available to the generator. The last three classes have substantially higher fault current levels than ungrounded, resonant grounded, and high-resistance grounded classes (see ANSI/IEEE C62.92-1987, Table 1 [6] for more information).

In addition to the normal shutdown sequence (eg, tripping the generator breaker and excitation) initiated by the machine protective relays, other measures are sometimes used to reduce the magnitude and duration of the fault current *after* the ground-fault relay has operated. These measures are (1) use of automatic neutral circuit breakers and (2) forced field reduction. Automatic neutral circuit breakers are used for comparatively small machines. When a neutral generator breaker is used, the Transient Recovery Voltage (TRV) characteristics of the breaker must be considered.

Where automatic neutral circuit breakers are applied, it is their function to interrupt heavy currents in a single phase-to-ground fault within the generators, thereby minimizing the damage. Opening of the neutral ground connection will change the system parameters of X_0/X_1 and R_0/X_1 and result in higher than normal temporary overvoltages on the unfaulted phases.

After the main circuit breaker has been tripped, the fault current will continue to flow as long as the fault circuit exists and until field flux in the generator decays to 0. Reduction of armature fault current can be accomplished with forced field reduction of the excitation system. Forced field reduction can be accomplished in several different ways [13]. The decay rate of the generator field flux determines the rate of reduction in generator fault current.

2.2 Limiting Mechanical Stress in the Generator for External Ground Faults

Fault current limiting devices are generally required for machines manufactured in accordance with the following standards:

ANSI C50.10-1977 [1]

ANSI C50.12-1981 [2]

ANSI C50.13-1977 [3]

Prior to these standards, no fault current limiting device was required in the generator neutral.

Meeting the limitation of ANSI C50.12-1981 [2] and ANSI C50.13-1977 [3] requires that at least a minimum value of impedance, either a resistance or a reactance, be installed in the neutral of all wye-connected grounded generators where the zero-sequence reactance is less than positive-sequence subtransient reactance.

In calculating the maximum currents that can flow in the generator windings during an external fault, it is usually sufficient to consider the generator impedances alone. It can be shown that, if sufficient neutral impedance is used to make the phase-to-ground fault current less than or equal to the 3-phase fault current with the machine isolated from the system, the winding currents for any fault will be less than or equal to the winding current for a 3-phase fault [14].

2.3 Limiting Overvoltages on Generator Insulation

The class of grounding affects generator overvoltage protection in controlling the magnitude of temporary and transient overvoltages during a ground fault and, consequently, determines the minimum rating of surge arresters that can be employed. These considerations are common to grounding all types of apparatus. The available classes of

Copyright © 1989 IEEE All Rights Reserved

Copyright The Institute of Electrical and Electronics Engineers, Inc.
Provided by IHS under license with IEEE
No reproduction or networking permitted without license from IHS Not for Resale

grounding may be ranked as follows in order of increasing temporary overvoltages assuming a fault resistance that yields the highest coefficient of grounding but neglects theeffects of restrikes within a solid dielectric [15]:

1) Effectively grounded
2) Low-inductance grounded
3) Low-resistance grounded
4) Resonant grounded
5) High-resistance grounded
6) Ungrounded

Ordering of transient overvoltages with grounding classes is difficult (refer to ANSI/IEEE C62.92-1987, Table 1 [6]). A comparison with the effect of grounding on fault current magnitude indicates that very low fault currents are generally obtained at the risk of higher temporary and transient overvoltages.

The insulation of all apparatus connected to the generator voltage system must withstand all temporary and transient overvoltages occurring as a result of unbalanced faults, switching, and lightning surges. Surge arresters, which may operate on transient overvoltages, should be applied so as to be able to withstand the temporary overvoltages that occur for unbalanced faults or other conditions. (Refer to ANSI/IEEE C62.92-1987, Table 1 [6], Class A and B. See also ANSI/IEEE C62.2-1987 [5].) It is, therefore, important when selecting a grounding class to consider the transient and temporary overvoltages that will result and the stresses on apparatus insulation and the protective margins possible with surge protective devices.

In any discussion of transient overvoltages, it should be recognized that numerous field tests have been made in an attempt to set up and measure high-transient voltages resulting from phase-to-ground arcing faults in air. From the results of these tests, it may be concluded that the conditions for building up these high voltages in an arc in air seldom exist [12], [17], [24]. However, it is suspected that intermittent faults through solid insulations may produce the necessary conditions for high-transient overvoltages. On the other hand, a system may have relatively high-transient overvoltages during switching operations if restriking occurs in the breaker. Accordingly, in considering any kind of grounding from the viewpoint of transient voltages, it is advisable to determine whether there will be switching to generator voltage at present or some time in the future.

The effect of grounding on the transient overvoltages following the occurrence and clearing of unbalanced faults at the generator terminals with and without restriking is illustrated in Figs 1 (a), 1 (b), and 2 [12], [17], [24]. The information presented in these figures was obtained from a Transient Network Analyzer (TNA) where clearing and restriking of the arc in a single phase-toground fault could be controlled to produce the maximum overvoltages. The system studied consisted of a generator model, with adjustable neutral grounding reactance, and a circuit breaker at generator voltage. The generator was simulated by a reactance of 1.28 Ω per phase, at 60 Hz, a winding capacitance of 0.35 μF per phase, and a capacitance to ground on the terminals of the generator of 0.20 μF per phase. The neutral reactance was varied to give a range of ratios of X_0/X_1. Results demonstrate the importance of selecting the proper class of neutral grounding in order to limit the transient overvoltages caused by switching surges.

Copyright © 1989 IEEE All Rights Reserved

Copyright The Institute of Electrical and Electronics Engineers, Inc.
Provided by IHS under license with IEEE
No reproduction or networking permitted without license from IHS
Not for Resale

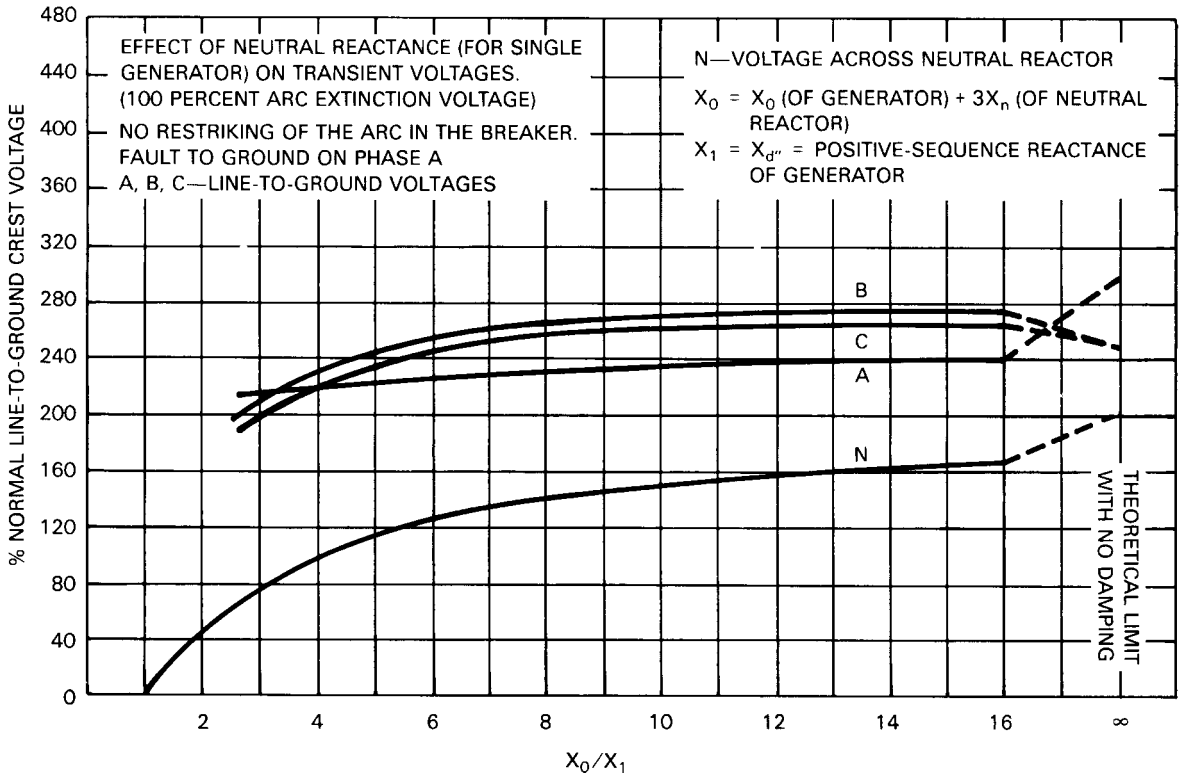

Figure 1 (a)——Effect of Neutral Reactance on Transient Voltages (No Restrike)

Copyright © 1989 IEEE All Rights Reserved

Copyright The Institute of Electrical and Electronics Engineers, Inc.
Provided by IHS under license with IEEE
No reproduction or networking permitted without license from IHS
Not for Resale

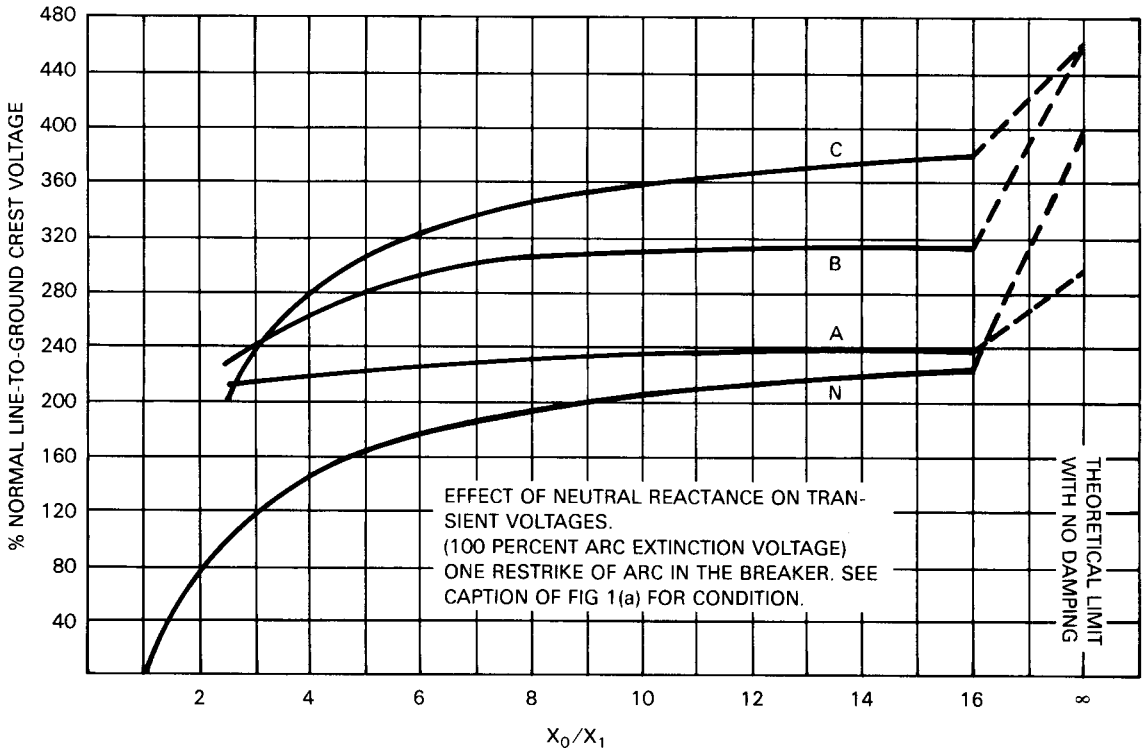

Figure 1 (b)— Effect of Neutral Reactance on Transient Voltages (with One Breaker Restrike)

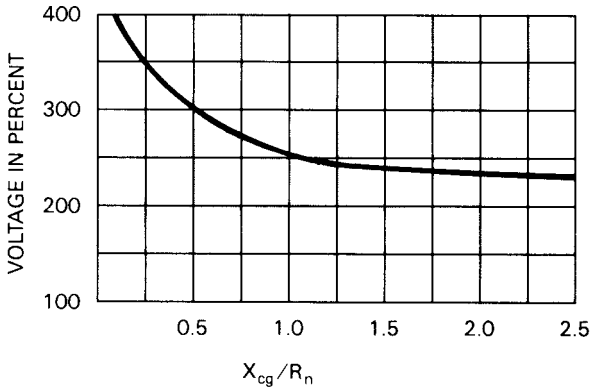

C_g = capacitance of all three phases to ground (3 C_o)
X_{cg} = $1/2\pi fC_g$, f – operating frequency
R_n = effective neutral resistance

Figure 2—Transient Voltage in Percent of Rated Peak Line-to-Ground Generator Voltage for Any Number of Restrikes in the Fault Arc or Across Circuit Breaker Contacts with Distribution Transformer and Secondary Resistor Scheme of Grounding [14]

The TNA model was such that the circuit breakers on the terminals of the generator were to force current zero sufficiently to give an arc extinction voltage equal to system line-to-ground voltage. For these conditions, Fig 1, (a) and (b), shows transient line-to-neutral voltages that were obtained on the various phases of the generator and across the

Copyright © 1989 IEEE All Rights Reserved

Copyright The Institute of Electrical and Electronics Engineers, Inc.
Provided by IHS under license with IEEE
No reproduction or networking permitted without license from IHS
Not for Resale

neutral reactor with inductance grounding. Figure 1 (a) gives the results with no restrike; Fig 1 (b) gives the results with one restrike followed by a clearing at the next current zero. For the arc extinction voltage assumed, Fig 1 (b) indicates that the ratio of X_0/X_1 should not exceed 3 if the transient voltages are to be limited to less than 250 percent of normal line-to-neutral crest voltage. However, this voltage is still less than 75 percent of the manufacturer's generator high-potential test voltage [7], [8]. Each case should be studied using specific characteristics and appropriate modeling techniques.

Figure 2 gives peak transient voltages for high-resistance grounding. The voltage is plotted against the ratio of the 3-phase capacitive reactance to ground and the effective neutral resistance of the circuit, X_{cg}/R_n (see ANSI/IEEE C62.92-1987, Figs 1 and 2 [6]). If this ratio is kept to 1 or greater, the peak voltage can be limited to about 260 percent of normal peak line-to-neutral voltage, which is also less than 75 percent of the generator test voltage. This curve applies for any number of restrikes for ratios greater than 1 because each oscillation is damped out and a buildup in transient voltage is prevented.

Figure 2 can also be used to indicate the magnitude of possible transient voltages on ungrounded machines. The case to be compared is where the ratio of the 3-phase capacitive reactance to ground (X_{cg}) and the neutral resistance (R_n) of the circuit is less than the 0.1 lower limit of Fig 2. Thus, transient voltages of 4 to 5 times normal line-to-ground voltage crest may be reached if breaker restriking occurs on the ungrounded system.

Temporary overvoltages on a generator can also be caused by a ground fault on the high-voltage side of the main power step-up transformer. Such an occurrence impresses a neutral displacement voltage on the generator grounding equipment. The generator neutral grounding in conjunction with the transformer high to low side capacitive coupling forms a voltage divider circuit for the zero-sequence voltage impressed upon the transformer high-voltage winding [23]. Consideration must be given to the generator grounding impedance and associated protective features to avoid temporary overvoltages that can damage the insulating systems or cause undesirable generator ground relay operations. The lower the generator system zero-sequence impedance, the lower will be the impressed neutral displacement voltage. Therefore, this occurrence is a particular consideration for resonant grounded generator systems.

The user of this guide should be aware that there is a degree of uncertainty as to the impulse strength of the generator insulation as compared to that of oil-insulated apparatus of the same voltage because of the different types of insulation systems and general construction. Because of this uncertainty, care should be taken in selecting both the class of grounding and the ratings of surge protective equipment.

2.4 Providing a Means of Generator System Ground-Fault Protection

The grounding class chosen for a generator has a significant impact on the sensitivity and speed of ground-fault relaying for the generator and other apparatus connected to the generator voltage system. In general, ungrounded, high-resistance, and resonant-grounded systems allow for the most sensitive ground-fault detection. In systems where generators are bussed together at generator voltage or where feeders are taken out at the generator voltage, relaying requirements may dictate a grounding class other than one which would provide maximum sensitivity for generator stator ground faults.

The effects which the choice of grounding class may have on ground relaying are discussed in a general way in Section 3. A complete discussion of generator ground-fault protection, including specific relaying systems, can be found in ANSI/IEEE C37.101-1985 [4].

2.5 Coordinating with the Other Apparatus at Generator Voltage Level

When a generator is interconnected with other systems, eg, other generators, plant auxiliaries, feeders, etc, *at the generated voltage level*, the class of generator grounding should not be determined by considering the generator's needs alone. Requirements for selective relaying, overvoltage control, inductive coordination, etc, in other parts of the system may constrain the choice of a generator grounding means.

Copyright © 1989 IEEE All Rights Reserved

Copyright The Institute of Electrical and Electronics Engineers, Inc.
Provided by IHS under license with IEEE
No reproduction or networking permitted without license from IHS Not for Resale

The specifics of these requirements for other systems may be found in the appropriate parts of this guide. The manner in which they may be reconciled with the generator requirements is discussed in 3.3.

3. Generator Grounding Types

Various generator grounding classes and types have tended to become associated with particular generator system configurations. It is a logical development since configurations that allow complete independence of choice of grounding means, ie, the unit generator transformer, are usually associated with grounding classes that maximize protection of the generator. When other equipment must be considered, the higher ground current schemes are often used. In the following subsections, the various grounding classes are discussed in connection with the configuration with which they are normally employed. This subdivision is not intended to imply that other classes cannot be used, but that the ones discussed are used most frequently.

3.1 Unit-Connected Generation Systems

A unit-connected system is one in which a single generator is connected directly to a delta/wye step-up transformer with the delta windings at generator voltage.

The unit configuration provides the maximum freedom of choice of a means for generator neutral grounding. The delta-connected winding of the unit transformer isolates the generator zero-sequence network from the rest of the system, allowing the neutral grounding of the generator to be chosen for maximum generator protection. The classes commonly used with the unit configuration are discussed below.

3.1.1 High-Resistance Grounding

High-resistance grounding normally takes the form of a low-ohmic value resistor connected to the secondary of a distribution transformer with the primary winding of the transformer connected from the generator neutral to ground. The advantage of the distribution transformer resistor combination is that the resistor used in the secondary of the distribution transformer is of comparatively low ohmic value and of rugged construction, as compared to obtaining the same result by installing a high-ohmic, low-current resistor directly in the generator neutral. This grounding arrangement is illustrated in Fig 3, Note A.

The current through the primary of the grounding transformer for a single phase-to-ground fault on a generator terminal is usually limited to between 5 and 15 A, depending upon generator size and zero-sequence capacitance to ground in the circuit operating at generator voltage.

Copyright © 1989 IEEE All Rights Reserved

Copyright The Institute of Electrical and Electronics Engineers, Inc.
Provided by IHS under license with IEEE
No reproduction or networking permitted without license from IHS Not for Resale

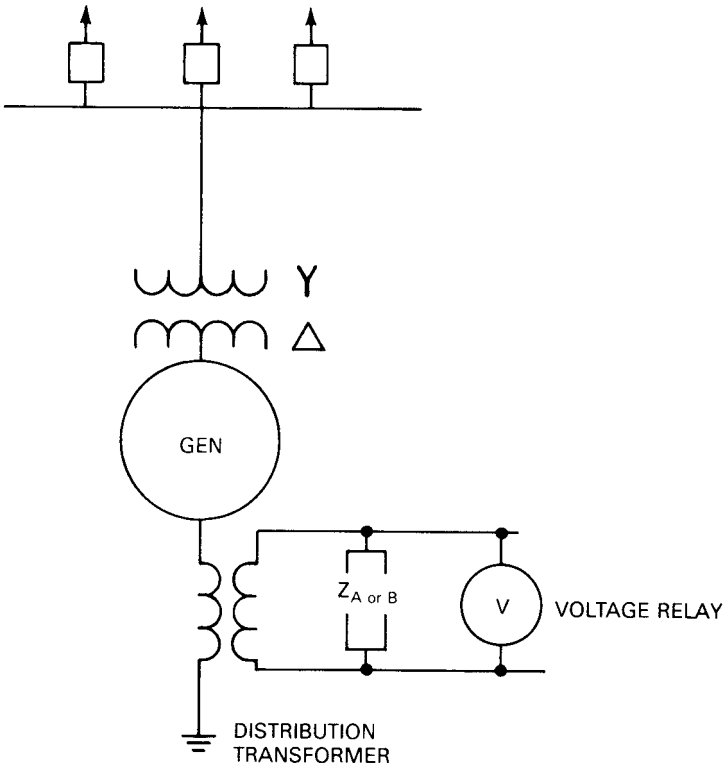

NOTES:
A = High-resistance grounding when Z is resistive.
B = Resonant grounding when Z is inductive.

Figure 3—Distribution Transformer Neutral Grounding

Sufficient damping to reduce transient overvoltages to safe levels can be achieved with a properly sized resistor. This condition can be met by making the value of the resistor in Ω equal to or less than the ohmic value of the 3-phase capacitance-to-ground; in other words, the ratio X_{cg}/R_n is equal to or greater than 1 (see Fig 2). This practice is described in equivalent terms such as:

1) To make the resistive component of ground-fault current equal to or greater than the capacitive component
2) To increase the power factor of the ground-fault current to at least 0.707
3) To shift the phase angle of ground-fault current to less than 45°
4) To make the resistor power loss greater than the generator circuit 3-phase capacitive VA

This proportioning will prevent high-transient voltages.

The primary voltage rating of the distribution transformer in the generator neutral should be equal to or slightly greater than the generator phase-to-neutral voltage. In general, a voltage rating of the nearest standard value below the generator line-to-line voltage is used. For example, generators rated at 15 kV to 22 kV frequently use distribution transformers with a 14.4 kV primary.

The 240 V secondary connection is usually used to provide sufficient voltage to operate a standard relay. The thermal rating of the transformer is determined by the length of time the primary is expected to carry fault current at the neutral voltage. Since a single phase-to-ground fault may be allowed to exist for an appreciable period, the thermal rating of the distribution transformer (in VA) is usually determined by the product of the transformer's rated primary voltage and the neutral current contribution to a solid phase-toground fault. However, operational experience and informed

 Copyright © 1989 IEEE All Rights Reserved

Copyright The Institute of Electrical and Electronics Engineers, Inc.
Provided by IHS under license with IEEE
No reproduction or networking permitted without license from IHS Not for Resale

engineering judgment have led to the establishment of overload factors that permit safe and reasonable overloads for various short periods of time. These factors can be applied to the maximum thermal rating to permit the use of a lower kVA rated transformer. The factor selected depends upon the length of time a fault is allowed to exist before the unit is taken offline. If manufacturer's data is not available, Table 1 may be used as a guide for the selection of short-time overload factors.

Table 1—Permissible Short-Time Overload Factors for Distribution Transformers Used for Neutral Grounding [16]

Duration of Overload	Multiple of Rated kVA
10 s	10.5
60 s	4.7
10 min	2.6
30 min	1.9
2 h	1.4

A detailed example calculation of high-resistance grounding using a distribution transformer is illustrated in Appendix A.

In summary, a generator system grounded through a distribution transformer with secondary resistor has certain characteristics that may have the following desirable features:

1) Mechanical stresses and fault damage are limited during line-to-ground faults by restricting fault current between 5 and 15 A.
2) Transient overvoltages are limited to safe levels.
3) Grounding device is more economical than direct insertion of a neutral resistor.
4) Relay sensitivity is relatively good except sensitivity decreases for faults nearer the neutral end of generator windings.

The following features may not be desirable:

1) Surge protective equipment must be selected on the basis of higher temporary overvoltages during ground faults.
2) Longer relaying time may be required.

3.1.2 Ungrounded

A system is considered to be ungrounded when no intentional connection to ground is made, except for potential transformers connected from generator neutral to ground and supplying only relays or instruments. If the neutral potential transformer secondary is loaded with a substantial resistive load, the system takes on the character of high-resistance grounding.

The advantages of this class are essentially the same as for high-resistance grounding except that the maximum fault current is somewhat less and transient voltages are not controlled well. A disadvantage is that excessive transient overvoltages may result from switching operations or intermittent faults.

3.1.3 Resonant Grounded

The ground-fault neutralizer is a neutral reactor having characteristics such that the capacitive charging current during a line-to-ground fault is neutralized by an equal component of inductive current contributed by the ground-fault neutralizer. The net fault current is thus reduced by the parallel resonant circuit to a low value, which is essentially in

Copyright © 1989 IEEE All Rights Reserved

Copyright The Institute of Electrical and Electronics Engineers, Inc.
Provided by IHS under license with IEEE
No reproduction or networking permitted without license from IHS Not for Resale

phase with the fault voltage. After extinction of the fault, the voltage recovery on the faulted phase is extremely slow with an exponential time constant of $Q/\pi f$ sec. (Q is the ratio of inductive *reactance* to the effective resistance of the transformer/reactor combination.) Accordingly, any ground fault of a transient nature would automatically be extinguished on a resonant-grounded system.

The application of generator resonant neutral grounding in the United States has been applied to some unit-connected generators supplying delta-connected, low-voltage windings of step-up transformers. The purpose of this grounding scheme is to provide an extremely sensitive means of detecting phase-to-ground faults on the generator voltage system and to limit the fault current to a very low value so that iron burning associated with generator insulation faults to ground is minimized [21], [26].

A distribution transformer and a reactor connected as in Fig 3, Note B, comprise the basic components of a ground-fault neutralizer. The reactor is selected so that the resultant reactance as seen from the high side of the distribution grounding transformer just matches the 3-phase capacitive reactance of the generator windings, generator leads, step-up transformer, station service transformers, and all other equipment connected directly between the generator terminals and the low side of the step-up transformer.

Single phase-to-ground faults are detected by the voltage or current in the secondary of the distribution transformer. For a phase-to-ground fault on the generator terminals, full generator phase-to-neutral voltage is impressed across the fault impedance in series with the primary winding of the grounding transformer. Because the net impedance of the tuned parallel LC circuit (tank circuit) consisting of the generator system capacitive reactance and the inductive reactance of the neutralizer is essentially a very high resistance, a detectable voltage will result even if a rather high fault resistance is present.

The fault resistance and the tuned LC circuit are in series and form a voltage divider. Fault detection sensitivity is very high because of the effective amplification of the resonant tank circuit. The equivalent impedance of the LC circuit in series with the fault is QX_{cg}. A voltage sensing device set at some ratio, $1/n$, of the full line-neutral secondary voltage will detect a fault resistance at generator voltage of (n-1) times the tank circuit impedance, QX_{cg}. Since X_{cg} is usually several thousands of ohms, detection sensitivity is very high. Fault resistance sensitivity decreases for faults near the neutral end of the generator winding, which reaches 0 at (100/n)% of the winding length from neutral.

Resonant grounding creates a highly tuned circuit, and amplified zero-sequence voltages will possibly be impressed on the generator windings from the high-voltage system because of the capacitive coupling through the windings of the step-up transformer. This voltage can be kept to within reasonable limits by selecting a value of Q in a range of from l0 to 50 without excessively reducing the sensitivity of the fault detection system [20], [23].

Zero-sequence and third harmonic voltages, which are inherently present in the generator output, can cause amplified zero-sequence and third harmonic currents to flow in the generator system. They are injected by the generator voltage between the neutral connection to the neutralizer inductance and the generator system capacitance to ground. This series-resonant circuit permits amplified zero-sequence currents and accentuates the harmonic voltages across the neutralizer inductance. The magnitude of the neutral voltage depends upon the magnitude of the zero-sequence voltage and the losses in the circuit and approximately equals E_o/Q[19]. Fault detection sensitivity can be degraded. These effects can be successfully dealt with by detuning and by the appropriate selection of Q.

Ground-fault neutralizers, designed as iron-core devices, saturate at voltages above rated voltage. This action protects the resonant-grounded system from the capacitively coupled high voltages mentioned above by detuning the resonant circuit when excessive voltages are applied. This refinement has not been found necessary on resonant-grounded generators. Air core reactors have been used exclusively in the United States. However, where calculations for an air core show that an unsatisfactorily low value of Q will be required to protect a specific system, a saturating iron-core reactor may be used. Alternatively, it may be possible to obtain saturation detuning by the use of a distribution transformer with a very sharp saturation characteristic at rated phase-to-neutral voltage. A thorough study of the saturation characteristics of the transformer/reactor combination must be made to determine if adequate detuning can be obtained to protect against excessive overvoltages.

Copyright © 1989 IEEE All Rights Reserved

--`,,`,`-`-`,,`,,`,`,,`---

Copyright The Institute of Electrical and Electronics Engineers, Inc.
Provided by IHS under license with IEEE
No reproduction or networking permitted without license from IHS Not for Resale

Equipment tolerances may cause a slight detuning of the system after installation. The transformer and reactor are usually specified with taps in order to vary the effective inductance. It is not necessary to tune the equipment with the generator at rated speed; therefore, testing can be done using 120 V or any convenient single-phase voltage. For a complete discussion of a tuning procedure, see Gross and Gulachenski [20].

Resonant grounding has a number of desirable features that apply to unit-connected generators:

1) Limits the ground-fault current to practically 0 thus minimizing the mechanical stresses and the possibility of iron burning for faults within the generator windings.
2) Permits the option of continued operation of the generator after the occurrence of a phase-to-ground fault until such time that an orderly shutdown can be arranged. However, in this situation, there does exist the possibility of progressive fault damage and the hazard of two phases being raised to full phase-to-phase voltage above ground. The experience of users in regard to resonant grounding of generators has neither shown progressive fault damage nor the need to trip immediately [21].
3) Prevents the occurrence of transient overvoltages as a consequence of intermittent grounds.
4) Allows high sensitivity during operating conditions for the detection of localized deterioration of generator system insulation.

Along with these desirable features are several that may be considered undesirable:

1) If automatic tripping is used, coordination with generator voltage transformer (VT) fuses may not be possible. VT secondary wiring faults may cause ground indications where wye/wye connected generator VTs are used. Coordination can be achieved by various methods; see IEEE Committee Report [22].
2) High-zero sequence voltages on the generator system are possible if too high a *Q* is selected for the neutralizer.
3) Surge protective equipment must be selected on the basis of higher temporary overvoltages during ground faults.

3.1.4 Other Grounding Classes

As applied to the unit configuration, the low-resistance, low-inductance, and effectively grounded classes offer lower transient overvoltages. A penalty for this improvement is the possibility of increased damage for internal faults caused by the higher fault currents.

3.2 Common Bus Generators without Feeders

This configuration is one in which the electrical arrangement is such that the power from two or more generators, not associated with the same prime mover systems, is supplied to a common bus with circuit breakers between the generator terminals and the common bus. In this situation, it is usually considered necessary to provide selective relaying of a faulty generator without tripping the sound units. Protection of the generator is still the primary objective; but fault current limitation must be sacrificed in order to provide selective relaying. In this arrangement, the generators are usually grounded by means of low-inductance or low-resistance grounding.

3.2.1 Low-Resistance Grounding

Low-resistance grounding is achieved by the intentional insertion of resistance between the generator neutral and ground. The resistance may be inserted either directly in the connection to ground or indirectly as in the secondary of a transformer whose primary is connected between generator neutral and ground.

The main advantage of low-resistance grounding is the ability of the neutral resistance to limit ground-fault current to a moderate value without exceeding 2.5 times line-to-ground voltage (see ANSI/IEEE C62.92-1987, Table 1 [6]). Transient overvoltages are less for low-resistance grounded operation than for high-resistance distribution transformer grounding. However, fully rated arresters (100 percent line-to-line voltage) are required.

Copyright © 1989 IEEE All Rights Reserved

Copyright The Institute of Electrical and Electronics Engineers, Inc.
Provided by IHS under license with IEEE
No reproduction or networking permitted without license from IHS Not for Resale

The current through a neutral resistor can be limited to any value; but usually it ranges from about several hundred amperes to about 1.5 times the normal rated generator current. The lower limit may be based on the operation of generator ground differential relays. The upper limit of 1.5 times normal rated current is related to the loss in the resistor during single phase-to-ground faults. A value of 1.5 times normal current through a neutral resistor gives a power loss of 50 percent of the kVA rating of the generator. The main disadvantage of low-resistance grounding is the cost of the grounding resistor.

3.2.2 Low-Inductance Grounding

Low-inductance grounding is accomplished in the same manner as low-resistance grounding with the substitution of an inductor for the resistor. The value of the inductor in ohms is less than that required for resonant grounding.

A generator system grounded through an inductor may have the following desirable features:

1) Limits transient overvoltages on the unfaulted phases to a value of 2.3 per unit if X_0/X_1 is no more than 10 (see ANSI/IEEE C62.92-1987, Table 1 [6]).
2) Allows the application of lower rated surge arresters, which offers greater protective margins if the system is effectively grounded.
3) Allows differential and ground relay operation for fast clearing of ground faults [23].
4) Limits the line-to-ground fault current to values less than those caused by 3-phase faults.

A major disadvantage of low-inductance grounding is that the relatively high ground-fault currents increase the possibility of iron-core damage for internal faults.

3.2.3 Effective Grounding

Effectively grounding the neutral of a generator has advantages and disadvantages similar to those enumerated above for low-inductance grounding with two significant differences. These are that (1) more current will flow through the generator windings and (2) lower temporary overvoltages will result upon occurrence of a phase-to-ground fault (see ANSI/ IEEE C62.92-1987 [6]). Both of these factors are attributable to the lower system zero-sequence impedance and, therefore, to a lower X_0/X_1 ratio.

Solid grounding, which is a method of effectively grounding a neutral, is not recommended. Such grounding has the risk of possible mechanical damage, which might be caused by excessive fault currents for phase-to-ground faults near the machine terminals (see 2.2). Terminal phase-toground fault currents will exceed those for a 3-phase fault at the same location whenever the machine zero-sequence reactance is less than the subtransient reactance of the machine, which is generally the case.

3.2.4 Third Harmonic Current Flow

If the generator neutral is grounded through a low resistance or inductance, a path is provided for third harmonic currents from the generator neutral to ground. If, however, another ground current source (eg, wye/delta transformer or another grounded generator) is also connected to the generator voltage level (generator bus), then third harmonic currents will circulate between the generator and the other source under normal operating conditions.

The magnitude of the circulating current depends on the amount of generated third harmonic voltage and the impedance (at 180 Hz) of the path over which it circulates. If the generator neutral is grounded directly or through such a low inductance as to make it effectively grounded, then third harmonic current of abnormal magnitude could flow. The effect of this current on connected equipment should be investigated (see ANSI/IEEE Std 519-1981 [9]).

With the impedance values typical of low-resistance or low-inductance grounding, the circulating harmonic current will not significantly load the generator windings. However, it must still be considered since it is a continuous loading on the neutral grounding device and may affect the required continuous current rating of that device.

Copyright © 1989 IEEE All Rights Reserved

Copyright The Institute of Electrical and Electronics Engineers, Inc.
Provided by IHS under license with IEEE
No reproduction or networking permitted without license from IHS Not for Resale

When applications of this type are contemplated, an estimate should be obtained, from the manufacturer, of the maximum generator third harmonic voltage. Using this information and the known or estimated impedances in the third harmonic circulation path, the current can be calculated and the equipment sized accordingly. When grounded generators are connected to systems having multiple ground sources, then an investigation of the effects of other harmonic sources may be required.

3.2.5 Application of Other Grounding Classes

The level of fault current associated with the above classes requires that faulted units be tripped immediately. When it is felt that the level of fault current is excessive but immediate tripping of faulted units is undesirable, one of the classes usually associated with unit configuration may be preferred.

With the resonant-grounded or ungrounded systems, it is quite difficult to provide selective relaying or fault indication. With high-resistance grounding, a selective protective system may be provided.

3.2.6 Variation in Fault Current

When several generators are bussed together and each has its own neutral grounding, the amount of system ground-fault current will increase with the number of parallel units in service.

This condition is undesirable since the maximum current desired is that which is sufficient to operate the relays. Excessive current increases the damage from an internal fault. This variation can be reduced, though not eliminated, by one of the means described in 3.3.2.

3.3 Generators with Feeders Directly Connected at Generated Voltage

In configurations where feeders (distribution, subtransmission, auxiliary, etc) are supplied from the generator bus at generator voltage, the choice of grounding class for the generator cannot be treated as an isolated problem. The grounding requirements for the feeder system will determine the grounding class of the generators. For example, if the feeders require effective grounding, the generator would also be effectively grounded; if the feeder system is to be ungrounded, the generators will also be ungrounded.

3.3.1 Preferred Classes

If the feeder system has no specific grounding requirement, low-resistance or low-inductance grounding is generally preferred (see 3.2). These classes represent a good compromise between the low-fault current values desired to prevent generator damage during internal faults and the high-fault values desired for simplified feeder ground relaying. High-resistance grounding is a possible alternative if selective relaying can be applied.

3.3.2 Variation in Ground-Fault Current

Use of the generator neutrals for grounding the system suffers from the problem that the fault current varies with the number of generators in service. This variation in current is undesirable because it may interfere with the ground relaying and produce excessive internal fault currents in the generators. If the system is such that the feeders will remain in service even if all the generators are out of service, the feeder system will become ungrounded under this condition.

3.3.2.1 Grounding Transformer

The preferred solution to this problem is to use a zigzag or wye/delta grounding transformer connected to the generator bus, leaving the generator neutrals ungrounded. The neutral resistor, if used, can be installed in the grounding transformer neutral. The grounding transformer zero-sequence impedance must be such that the desired X_0/X_1 ratio is not exceeded for any operating condition. The use of a grounding transformer in this way is equivalent to low-

Copyright © 1989 IEEE All Rights Reserved

Copyright The Institute of Electrical and Electronics Engineers, Inc.
Provided by IHS under license with IEEE
No reproduction or networking permitted without license from IHS Not for Resale

inductance or low-resistance grounding with respect to the possible fault current levels and temporary and transient overvoltages. The maximum current in the generator windings for ground faults can be controlled to not exceed the current for a 3-phase fault. An additional advantage of this scheme is that, for an internal generator ground fault, the fault current will cease to flow as soon as the generator circuit breaker is tripped, eliminating the need for a neutral circuit breaker or forced field reduction.

3.3.2.2 Neutral Bussing or Switching

If operating conditions are such that at least one generator will always be connected to the bus, it is feasible to avoid the use of a grounding transformer by neutral switching arrangements. One scheme is to provide in the operating instructions that only one generator is to be grounded regardless of the number in service. Another possible scheme is to connect all the generator neutrals to a common bus and then connect a single resistor or reactor from the neutral bus to ground. Means should be provided to disconnect each generator from the neutral bus for maintenance. Nonautomatic breakers or disconnect switches can be used to connect the generators to the neutral bus. These breakers are not operated during faults but are used to isolate the generator neutral. Any bussing or switching arrangement of this type must be studied to ensure that proper values of R_0 and X_0 are maintained under all possible operating conditions.

3.4 Three-Phase, 4-Wire Connected Generators

Most generators with this winding connection are of smaller size, less than 2000 kVA, and used in systems lower than 600 V. Usually they are auxiliary or emergency supply generators serving systems that are required by ANSI/NFPA 70-1987, National Electrical Code [10] to be grounded. Consequently, most such generators have their neutrals effectively grounded either at the generator or by the system neutral which they supply.

4. Bibliography

AIEE COMMITTEE REPORT. Present-Day Grounding Practices on Power Systems, *AIEE Transactions on Power Apparatus and Systems*, 1947.

AIEE COMMITTEE REPORT. Relay Protection of A–C Generators, *AIEE Transactions on Apparatus and Systems*, vol 70, 1951, pp 275–282.

AIEE COMMITTEE REPORT. Simplified Calculation of Fault Currents, *AIEE Transactions on Power Apparatus and Systems*, 1948, p 1433.

AIEE COMMITTEE REPORT. Thermal Limits of Transformers for Short-Circuit Conditions, *AIEE Transactions on Power Apparatus and Systems*, vol PAS-79, part III, Feb 1961, p 1083 and 1086, discussion by J. C. Russ, p 1086.

IEEE C37.102-1987, Guide for AC Generator Protection.

ANSI/IEEE Std 32-1972, Requirements, Terminology, and Test Procedures for Neutral Grounding Devices.

BOYCE and HUNTER. “System Electrical Neutral Grounding,” *Electric Light and Power*, Nov 1943.

CLARK, CRARY, and PETERSON. Overvoltages During Power System Faults, *AIEE Transactions on Power Apparatus and Systems*, 1959.

EVANS, MONTEITH, and WITZKE. Power System Transients Caused by Switching and Faults, *AIEE Transactions on Power Apparatus and Systems*, 1939.

 Copyright © 1989 IEEE All Rights Reserved

Copyright The Institute of Electrical and Electronics Engineers, Inc.
Provided by IHS under license with IEEE
No reproduction or networking permitted without license from IHS Not for Resale

HUNT, L. F. “Minimizing Fault Damage Within Generators,” *Electrical World*, vol 94, 1929, pp 1263–1264.

HUNT, L. F. and VIVIAN, J. H. Operating Experience with Ungrounded Neutral, EEI Bulletin, vol 17, 1949, pp 333–337.

JOHNSON, A. A. “Generator Grounding,” *Electrical Light and Power*, Mar 1952.

JOHNSON, A. A. Grounding Principles and Practices, *AIEE Transactions on Power Apparatus and Systems*, 1945.

JOHNSON, A. A. “How to Apply Neutral Grounding Devices,” *Westinghouse Engineer*, May 1943.

JOHNSON, I. B. “Transient Analyzer Applications,” *General Electric Review*, Sep 1951.

MARTNER, W. E. and JOHNSON, A. A. “Generator Grounding Using Distribution Transformer with Secondary Resistor,” *Electrical World*, Dec 11, 1943.

PAZMANDI, L. Stator Earth-Leakage Protection for Large Generators, *IEEE Transactions on Power Apparatus and Systems*, vol PAS-94, no 4, July/Aug 1975, pp 1436–1439.

PETERSON, H. A. “Critical Analysis of Rotating Machine Grounding Practice,” *General Electric Review*, Apr 1942.

RUSS, J. C. “Thermal Ratings and Temperature Limits for Neutral Grounding Devices,” AIEE paper CP60-1275, AIEE fall general meeting, Oct 1960.

TOMLINSON, H. R. Ground-Fault Neutralizer Grounding of Unit-Connected Generators, *IEEE Transactions on Power Apparatus and Systems*, Oct 1953, pp 953–960.

Copyright © 1989 IEEE All Rights Reserved

Copyright The Institute of Electrical and Electronics Engineers, Inc.
Provided by IHS under license with IEEE
No reproduction or networking permitted without license from IHS Not for Resale

Annex A Example of High-Resistance Grounding

(Informative)

An example calculation of high-resistance grounding is performed for the system described in Fig A.1 and Table A.1.

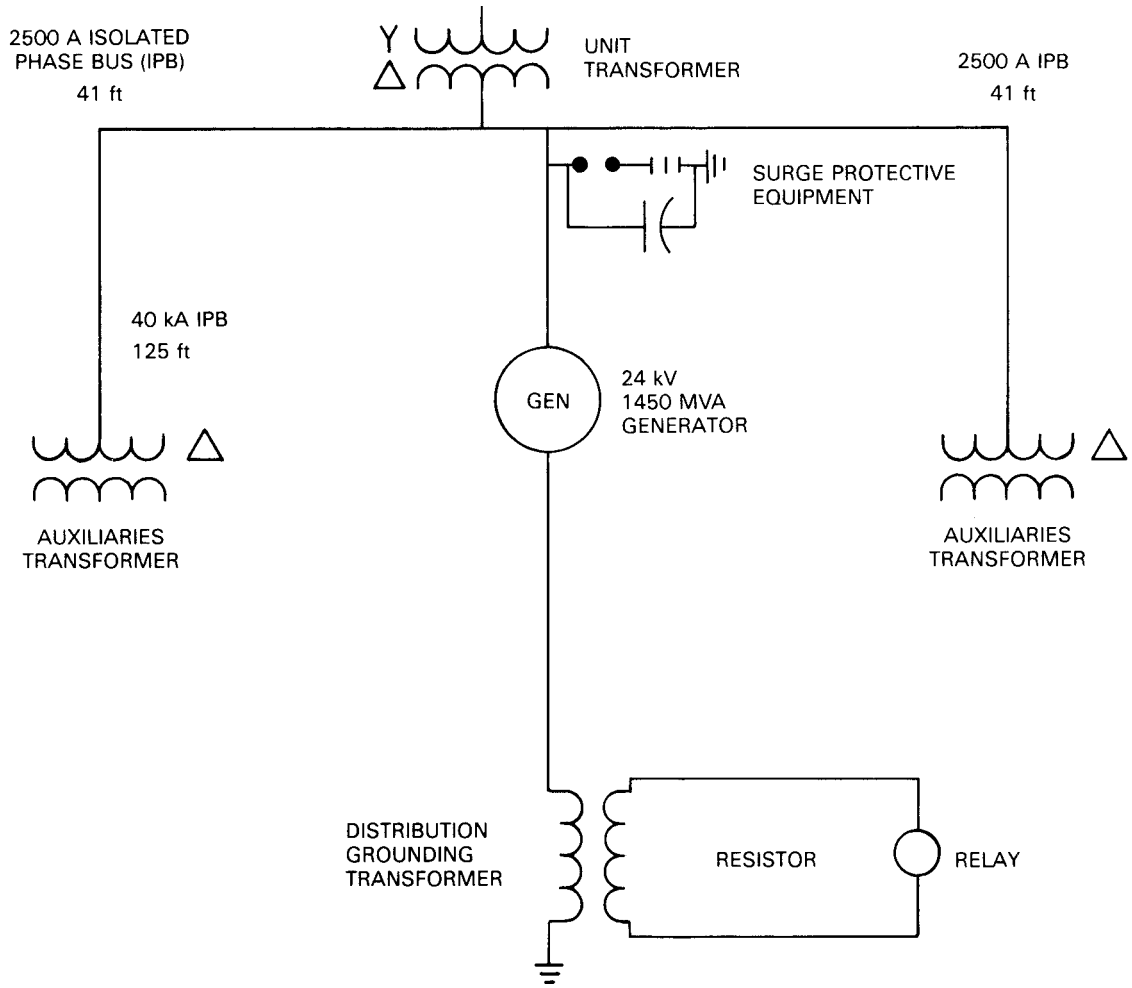

Figure A.1—System One Line Diagram

Copyright © 1989 IEEE All Rights Reserved

Copyright The Institute of Electrical and Electronics Engineers, Inc.
Provided by IHS under license with IEEE
No reproduction or networking permitted without license from IHS
Not for Resale

Table A.1—Equipment Data

Equipment	Phase Capacitance to Ground (C_o)
1450 MVA, 24 kV Generator (C_{GEN})	0.23μF
Surge Bank (C_{SB})	0.125 μF
Unit Transformer (C_{MSU})	3667 pF
Auxiliaries Transformer (C_{AUX})	1092 pF
125 ft 40 kA IPB @ 35.3 pF/ft (C_{MB})	4413 pF
82 ft 2500 A IPB @ 14.3 pF/ft (C_{AB})	1173 pF

The grounding resistor is sized so that the ratio $X_{cg}/R_n = 1$. The capacitive reactance, X_{cg}, is equal to $1/\Omega\ C_g$. C_g and R_n (effective resistance between the generator neutral and ground) are defined in ANSI/IEEE C62.92-1987, Fig 1 [A1].

$$C_o = (C_{GEN} + C_{SB} + C_{MSU} + 2C_{AUX} + C_{MB} + C_{AB})$$

$$X_{CO} = \frac{1}{\omega \times (C_{GEN} + C_{SB} + C_{MSU} + 2C_{AUX} + C_{MB} + C_{AB})}$$

$$= \frac{1}{377 \times 3.644 \times 10^{-7}} = 7239\Omega$$

The capacitive reactance-to-ground (X_{cg}) seen at the neutral is equal to the parallel combination of the capacitive reactances-to-ground of all three phases.

$$X_{cg} = X_{co}/3 = 7239/3 = 2413\ \Omega$$

$$R_n = X_{cg} = 2413\ \Omega$$

A 24 000–240 V distribution transformer is used to ground the generator neutral. Therefore, the secondary resistor must be calculated so that the effective neutral resistance is equal to R_n.

$$N(\text{turns ratio}) = \frac{24\ 000}{240} = 100$$

$$R_{\text{sec}} = \frac{R_n}{N^2} = \frac{2413}{100^2} = 0.2413\Omega$$

The exact value of resistance is not critical. Equipment capacitive tolerances and the resistance change due to temperature rise cause this calculation to be only an estimate. The conservative approach for lower transient overvoltages is with a greater I^2R loss or higher generator fault current [A3]. Reducing the ohmic value of the secondary resistor to reduce transient overvoltages may tend to increase damage resulting from ground faults. A slightly smaller resistor could be selected based upon operational practices of the individual generator system.

During a sustained ground fault, current will flow in the secondary resistor. This current must be determined in order to specify the continuous current rating of the resistor and transformer kVA. The maximum neutral voltage is assumed to be phase-to-ground voltage.

$$I_{\text{sec max}} = \frac{V_{\text{sec max}}}{R_{\text{sec}}} = \frac{V_{\text{gen}}(L-L)}{\sqrt{3}} \times \frac{1}{N} \times \frac{1}{R_{\text{sec}}}$$

Copyright © 1989 IEEE All Rights Reserved

Copyright The Institute of Electrical and Electronics Engineers, Inc.
Provided by IHS under license with IEEE
No reproduction or networking permitted without license from IHS Not for Resale

$$= \frac{24\,000}{\sqrt{3}} \times \frac{1}{100} \times \frac{1}{0.2413} = 574\text{A}$$

The power rating of the resistor can be calculated in the following manner:

$P_R = I^2R = 574^2 \times 0.2413 = 79.6$ kW

The thermal rating of the transformer is calculated using full transformer voltage and the following equation:

kVA = $E_{\text{sec rated}} \times I_{\text{sec max}} = 240 \times 574 = 138$kVA

The basis for the transformer rating is the thermal current ($I_{\text{sec max}}$). This value is the current through the neutral device during a groundfault condition. Implicit in the thermal current rating is a continuous duty multiplying factor. Grounding resistors must be rated to withstand the full thermal current. Grounding transformers can be rated on a short-time basis (see [A2] and Table 1, Permissible Short-Time Overload Factors for Distribution Transformers Used for Neutral Grounding).

10-min overload factor following no load is 2.6.

138/2.6 = 53.1 kVA (A 50 kVA transformer is adequate.)

This example can be extended by calculating the maximum fault power and comparing it to the fault power for resonant grounding of the same system.

Grounding fault current I_f will be the vector sum of the current I_R flowing through the primary of the resistor-loaded grounding transformer, and the current I_{Xcg} flowing from ground through the capacitance-to-ground of the unfaulted phases and back to the fault through the generator neutral and out the faulted phase.

$I_f = I_R + \text{j}I_{Xcg}$

Since R has been made equal to X_{cg}:

$I_f = I_R(1 + \text{j}1) = I_R\sqrt{2} = 8.12\text{A}$

Calculate the maximum energy that can be delivered to a fault with this system as now designed, where $X_{cg} = R_g =$ 2413 Ω:

$P_f = I_f^2 R_f$

and

$$I_f = \frac{E_{L-N}}{Z_T}$$

The admittance Y of the fault current return path through parallel grounding resistance and system capacitance will be

$$Y = \frac{1}{R_g} + j\frac{1}{X_{cg}}$$

The total impedance in the fault current will be

$$Z_T = R_f + \frac{1}{Y}$$

This reduces to

Copyright © 1989 IEEE All Rights Reserved

Copyright The Institute of Electrical and Electronics Engineers, Inc.
Provided by IHS under license with IEEE
No reproduction or networking permitted without license from IHS Not for Resale

$$Z_T = \left(R_f + \frac{R_g}{\sqrt{2}}\right) - \mathrm{j}\frac{R_g}{2} \qquad \text{when } R_g = X_{cg}$$

Maximum power transfer into the fault will occur when the fault resistance, R_f, is equal to the impedance of the parallel combination of the grounding resistor, R_g, and the generator system capacitance to ground, X_{cg}.

$$R_f = \frac{R_g}{2} - j\frac{R_g}{2} = \frac{R_g}{\sqrt{2}}$$

and

$$Z_T = \left(\frac{R_g}{\sqrt{2}} + \frac{R_g}{2}\right) - j\frac{R_g}{2} = 1.307R_g$$

Therefore, for conventional high-resistance grounding where R_g is made equal to X_{cg}, maximum power into fault, and maximum fault damage will occur when

$$R_f = \frac{R_g}{\sqrt{2}}$$

and

$$Z_T = 1.307R_g$$

Maximum fault power will be equal to

$$\frac{E_{L-N}^2 R_f}{Z_T^2}$$

or

$$Pf_{\max} = \frac{E_{L-N}^2}{1.707R_g\sqrt{2}} = 0.414\,\frac{13\,856^2}{2413}$$

$$= 0.414 \times 79.6 \text{ kW} = 33.0 \text{ kW}$$

If a solid fault occurred so R_f = O, the power dissipated in the grounding resistor, P_r, will be:

$$P_r = \frac{E_{L-N}^2}{R_g} = 79.6 \text{ kW}$$

Therefore, with conventional high-resistance grounding, the maximum power release in the fault equals 0.414 times the power dissipated in the grounding resistance when a solid fault occurs.

A.1 References

[A1] ANSI/IEEE C62.92-1987, Guide for the Application of Neutral Grounding in Electrical Utility Systems, Part I—Introduction.

[A2] DANN, W. M. and MONTSINGER, V. M. Overloading of Power Transformers, *AIEE Transactions on Power Apparatus and Systems*, Oct 1934, p 1353.

[A3] GRIFFEN, C. H. and POPE, J. W. Generator Ground Fault Protection Using Overcurrent, Overvoltage, and Undervoltage Relays, *IEEE Transactions on Power Apparatus and Systems*, vol PAS-101, no 12, Dec 1982, p 4491.

Copyright © 1989 IEEE All Rights Reserved

Copyright The Institute of Electrical and Electronics Engineers, Inc.
Provided by IHS under license with IEEE
No reproduction or networking permitted without license from IHS
Not for Resale

Annex B Resonant Grounding of a Unit-Connected Generator System

(Informative)

B.1 Example Using the Generator System from Appendix A

Design for an achievable Q of 20, ie,

$$\frac{X_L}{R} = 20$$

Use a distribution transformer with secondary reactor. Select transformer with 14 400 V primary, which will saturate and may provide slight system detuning if an excessive overvoltage occurs. (Transformer ratio = 60:1)

For tuning, set $X_L = X_{cg} = 2413\ \Omega$

$$R = \frac{X_L}{20} = 120.7\Omega = L = \frac{2413}{\omega} = 6.40\ H$$

Calculate the fault current, and select a transformer rating.

Impedance Z_{tank} of tuned tank circuit between generator neutral and ground equals QX_{cg}.

$$Z_{\text{tank}} = 20 \times 2413 = 48\ 260\ \Omega$$

$$I_f = \frac{13856}{48260} = 0.287A$$

In the resonant-grounded system, power transfer will occur through the fault only when the fault is conducting. When a fault occurs, there is initially full line-to-neutral voltage across the fault and the tuned tank circuit in series. The full voltage appears across the fault since there is initially zero current in the tank and zero voltage across it.

As fault current rises in the first half cycle, it establishes full resonant current in the tank and a high voltage is established across the tank equal to

$$E_{L-N} \times \frac{QX_{cg}}{R_f + QX_{cg}}$$

If QX_{cg} is large compared to R_f, the voltage across the fault will become very small and the fault current will be momentarily extinguished. The tank current oscillations will decay exponentially with time constant $T = Q/\pi f$, which is 0.106 sec for a Q of 20. The envelope of oscillating voltage crests will fall exponentially across the tank circuit and will increase across the fault until it restrikes in a few cycles. However, if R_f is appreciable compared to QX_{cg}, say at least 5 to 10 percent, then voltage across the fault will rise to 5 or 10 percent $E_{L\text{-}N}$ each half cycle and the fault will restrike each half cycle and recharge the tank.

The requirements of the transformer can be determined as follows. Calculate maximum tank circuit current, ie, when $R_f = 0$.

$$I_{cg} = \frac{E_{L-N}}{-jX_{cg}} + \frac{13\ 856\ \text{V}}{-j2413} = +j5.74\ \text{A}$$

Note that this is the same value of current which flows in a high-resistance grounded system through the capacitance to ground, or through the distribution transformer primary. The current, I_L, through a resonant grounding distribution transformer will flow through the transformer impedance, Z_L.

$Z_L = R + jX_L = 2413\ (.05 + j1\ )$ for a Q of 1/.05 = 20

Copyright © 1989 IEEE All Rights Reserved

Copyright The Institute of Electrical and Electronics Engineers, Inc.
Provided by IHS under license with IEEE
No reproduction or networking permitted without license from IHS Not for Resale

$$I_L = \frac{13\,856\ \text{V}}{2413(.05 + \text{j}1)} = 0.286 - \text{j}5.73\ \text{A}$$

Resonant-grounded fault current when $R_f = 0$:

$I_L = 5.74$ A and $I_{\text{sec}} = 5.74 \times 60 = 344$ A

$$V_{\text{sec}} = \frac{13\,856}{60} = 231\ \text{V} (\text{turns ratio} = N = 60)$$

$$\text{total} R_{\text{sec}} = \frac{R}{N^2} = \frac{2413(0.05)}{3600} = 0.0335\ \Omega$$

$$\text{total} X_{L\text{sec}} = \frac{X_L}{N^2} = \frac{2413}{3600} = 0.6703\ \Omega$$

$$L = \frac{0.6703}{\omega} = 1.778\ \text{mH}$$

$Z_{\text{sec}} = 0.0335 + \text{j}0.6703 = 0.6711\ \Omega$

The distribution transformer is selected on power requirements and its R and L are checked to ensure they are low enough to allow for the reasonable design of the reactor to provide an overall Q of 20.

The rating of transformer continuously loaded equals

14 400 V × 5.74 A = 82.7 kVA

With resonant grounding, the risk of fault damage is low and the transformer can be selected on the basis of a 2-h or extended time rating when faulted (ANSI/IEEE Std 32-1972 B1). A 75 kVA transformer would be only 10 percent overloaded on a continuous basis, which is reasonable for a distribution transformer considering that it may be subjected to such duty only for a few times during its normal life.

Transformer rating on a 2-h basis will be 82.7/1.4 (2-h overload factor) or 59.1 kVA. A 75 kVA rating is larger than required, and a 50 kVA rating would be dutied only 18 percent over its 2-h rating. The final selection of the transformer is based on an assessment of risks and benefits.

Checking R and X Values of a 50 kVA Transformer. 50 kVAwith 14 400/14 100/13 800/13 500/ 13 200 V primary voltage rating and 240 V secondary.

$R = 1.2\%$, $X = 1.7\%$ @ 13.8 kV rating

I = kVA/kV = 50/13.8 = 3.62 A

$R = Rpu \times V/I = 0.012 \times 13\,800/3.62 = 45.7\ \Omega$

R available for coil = 120.7 – 45.7 = 75 Ω (This is sufficient.)

$X = X_{\text{pu}} \times V/I = 0.017 \times 13\,800/3.62 = 64.8\ \Omega$

X available for coil = 2413 – 65 = 2348 Ω

Consequently, any transformer 50 kVA or larger is suitable.

Copyright © 1989 IEEE All Rights Reserved

Copyright The Institute of Electrical and Electronics Engineers, Inc.
Provided by IHS under license with IEEE
No reproduction or networking permitted without license from IHS Not for Resale

Minimum coil X/R = 2348/75 = 31.3.

The maximum power into a fault will occur when $R_f = QX_{cg}$, where QX_{cg} is purely resistive.

$$R_f = 20 \times 2413 = 48\,260\ \Omega \quad I_f = \frac{E_{L-N}}{R_f + QX_{cg}}$$

$$= \frac{E_{L-N}}{2QX_{cg}} = \frac{13\,856}{96\,520} = 0.144\ \text{A}$$

$$Pf = I_f^2 R_f = \frac{E_{L-N}^2 R_f}{(R_f + QX_{cg})^2} = \frac{E_{L-N}^2 QX_{cg}}{(2QX_{cg})^2}$$

$$= \frac{E_{L-N}^2}{4QX_{cg}} = 995\ \text{W}$$

Pf = 995 W is the maximum continuous power into a fault for a 24 kV resonant-grounded generator when X_{cg} = 2413 Ω and Q = 20.

The relative fault damage exposure between resonant grounding and high-resistance grounding can be evaluated. Compare the maximum power that can be delivered to a fault by each system.

Resonant: $Pf = \frac{E_{L-N}^2}{4QX_{cg}}$

High Resistance: $Pf_{\max} = \frac{E_{L-N}^2}{2.414R_g} = \frac{E_{L-N}^2}{2.414X_{cg}}$

The Ratio: $\frac{\text{Resonant } Pf_{\max}}{\text{High Resistance } Pf_{\max}} = \frac{2.414X_{cg}}{4QX_{cg}}$

$$= \frac{1}{1.657Q}$$

For Q in the range of 15 to 50, the maximum fault power that resonant grounding can deliver (into a high-resistance fault, where $R_f = QX_{cg}$) is 1/25th to 1/80th the maximum fault power that can be delivered by the high-resistance grounding (where $R_f = X_{cg}$). A more practical comparison is obtained when the fault resistance R_f is low and equal for both systems and R_f is at least an order of magnitude less than X_{cg}.

In this case, the resonant-grounding fault current, I_f, will be determined by X_{cg} and will be relatively unaffected by R_f. The ratio of power into a low-resistance fault for a resonant-grounded system compared to a high-resistance grounded system approaches

$$\frac{1}{(2Q^2)}$$

as R_f approaches 0. For low-fault resistance equal to X_{cg}/10, the resonant-grounded system will deliver between 1/370th to 1/4000th the fault power of a high-resistance grounded system for Q's in the range of 15 to 50.

Copyright © 1989 IEEE All Rights Reserved

Copyright The Institute of Electrical and Electronics Engineers, Inc.
Provided by IHS under license with IEEE
No reproduction or networking permitted without license from IHS
Not for Resale

B.2 Reference

[B1] ANSI/IEEE Std 32-1972 (R 1984), Requirements, Terminology, and Test Procedures for Neutral Grounding Devices.

Copyright © 1989 IEEE All Rights Reserved

Copyright The Institute of Electrical and Electronics Engineers, Inc.
Provided by IHS under license with IEEE
No reproduction or networking permitted without license from IHS
Not for Resale