Recognized as an
American National Standard (ANSI)

IEEE Std C62.92.1™-2000 (R2005)
(Revision of
IEEE Std C62.92.1-1987)

IEEE Guide for the Application of Neutral Grounding in Electrical Utility Systems—Part I: Introduction

Sponsor

Surge Protective Devices Committee
of the
IEEE Power Engineering Society

Reaffirmed 9 June 2005
Approved 21 September 2000

IEEE-SA Standards Board

Abstract: This guide is the introduction to the C62.92 series of five IEEE guides on neutral grounding in three-phase electrical utility systems. It provides system grounding definitions and considerations that are general to all types of electrical utility systems.
Keywords: class of grounding, coefficient of grounding (COG), earth-fault factor (EFF), earth-return path, effectively grounded, electrical utility systems, grounded solidly, ground-fault current, impedance grounding, means of grounding, neutral grounding, power-system grounding, reactance grounded, system grounding

The Institute of Electrical and Electronics Engineers, Inc.
3 Park Avenue, New York, NY 10016-5997, USA

Copyright © 2005 by the Institute of Electrical and Electronics Engineers, Inc.
All rights reserved. Published 4 April 2001. Printed in the United States of America.

Print: ISBN 0-7381-2633-0 SH94889
PDF: ISBN 0-7381-2634-9 SS94889

No part of this publication may be reproduced in any form, in an electronic retrieval system or otherwise, without the prior written permission of the publisher.

Copyright The Institute of Electrical and Electronics Engineers, Inc.
Provided by IHS under license with IEEE
No reproduction or networking permitted without license from IHS
Not for Resale

IEEE Standards documents are developed within the IEEE Societies and the Standards Coordinating Committees of the IEEE Standards Association (IEEE-SA) Standards Board. The IEEE develops its standards through a consensus development process, approved by the American National Standards Institute, which brings together volunteers representing varied viewpoints and interests to achieve the final product. Volunteers are not necessarily members of the Institute and serve without compensation. While the IEEE administers the process and establishes rules to promote fairness in the consensus development process, the IEEE does not independently evaluate, test, or verify the accuracy of any of the information contained in its standards.

Use of an IEEE Standard is wholly voluntary. The IEEE disclaims liability for any personal injury, property or other damage, of any nature whatsoever, whether special, indirect, consequential, or compensatory, directly or indirectly resulting from the publication, use of, or reliance upon this, or any other IEEE Standard document.

The IEEE does not warrant or represent the accuracy or content of the material contained herein, and expressly disclaims any express or implied warranty, including any implied warranty of merchantability or fitness for a specific purpose, or that the use of the material contained herein is free from patent infringement. IEEE Standards documents are supplied "**AS IS**."

The existence of an IEEE Standard does not imply that there are no other ways to produce, test, measure, purchase, market, or provide other goods and services related to the scope of the IEEE Standard. Furthermore, the viewpoint expressed at the time a standard is approved and issued is subject to change brought about through developments in the state of the art and comments received from users of the standard. Every IEEE Standard is subjected to review at least every five years for revision or reaffirmation. When a document is more than five years old and has not been reaffirmed, it is reasonable to conclude that its contents, although still of some value, do not wholly reflect the present state of the art. Users are cautioned to check to determine that they have the latest edition of any IEEE Standard.

In publishing and making this document available, the IEEE is not suggesting or rendering professional or other services for, or on behalf of, any person or entity. Nor is the IEEE undertaking to perform any duty owed by any other person or entity to another. Any person utilizing this, and any other IEEE Standards document, should rely upon the advice of a competent professional in determining the exercise of reasonable care in any given circumstances.

Interpretations: Occasionally questions may arise regarding the meaning of portions of standards as they relate to specific applications. When the need for interpretations is brought to the attention of IEEE, the Institute will initiate action to prepare appropriate responses. Since IEEE Standards represent a consensus of concerned interests, it is important to ensure that any interpretation has also received the concurrence of a balance of interests. For this reason, IEEE and the members of its societies and Standards Coordinating Committees are not able to provide an instant response to interpretation requests except in those cases where the matter has previously received formal consideration.

Comments for revision of IEEE Standards are welcome from any interested party, regardless of membership affiliation with IEEE. Suggestions for changes in documents should be in the form of a proposed change of text, together with appropriate supporting comments. Comments on standards and requests for interpretations should be addressed to:

Secretary, IEEE-SA Standards Board
445 Hoes Lane
P.O. Box 1331
Piscataway, NJ 08855-1331
USA

Note: Attention is called to the possibility that implementation of this standard may require use of subject matter covered by patent rights. By publication of this standard, no position is taken with respect to the existence or validity of any patent rights in connection therewith. The IEEE shall not be responsible for identifying patents for which a license may be required by an IEEE standard or for conducting inquiries into the legal validity or scope of those patents that are brought to its attention.

IEEE is the sole entity that may authorize the use of certification marks, trademarks, or other designations to indicate compliance with the materials set forth herein.

Authorization to photocopy portions of any individual standard for internal or personal use is granted by the Institute of Electrical and Electronics Engineers, Inc., provided that the appropriate fee is paid to Copyright Clearance Center. To arrange for payment of licensing fee, please contact Copyright Clearance Center, Customer Service, 222 Rosewood Drive, Danvers, MA 01923 USA; (978) 750-8400. Permission to photocopy portions of any individual standard for educational classroom use can also be obtained through the Copyright Clearance Center.

Copyright The Institute of Electrical and Electronics Engineers, Inc.
Provided by IHS under license with IEEE
No reproduction or networking permitted without license from IHS
Not for Resale

Introduction

(This introduction is not a part of IEEE Std C62.92.1-2000, IEEE Guide for the Application of Neutral Grounding in Electrical Utility Systems—Part I: Introduction.)

This guide is the introduction to the IEEE C62.92 series of five guides on neutral grounding in electrical utility systems. In this series of guides, individual considerations and practices are given to the grounding of synchronous generator systems, generator-station auxiliary systems, distribution systems, and transmission and subtransmission systems.

In the entire IEEE C62.92 series, emphasis is on power-system grounding practices as contrasted with the grounding, e.g., of industrial systems, which are covered in other guides and standards. Those guides and standards should be referenced, when appropriate, to gain a full picture of other grounding practices.

Besides updating the format of the guide, this revision expands the bibliography, adds a new annex to clarify the effects of grounding resistances and grounded conductors, and attempts to clarify areas that elicited questions or comments in IEEE Std C62.92-1987.

It is impossible to give recognition to all those who have contributed to the technology and practices of grounding of power systems. However, the assistance of members, past and present, of the Neutral Grounding Devices Working Group of the Surge Protective Devices Committee, and other similar groups with comparable purposes, is gratefully acknowledged.

The American National Standards Committee C62, Surge Arrestors, had the following members at the time this guide was approved:

J. L. Koepfinger, *Chair*

J. A. Gauthier, NEMA *Co-Secretary*

N. Ahmad, *IEEE Co-Secretary*

L. Bock
J. J. Burke
E. Cameron
J. S. Case
C. Chrysanthou
T. Compton
W. Etter
A. Haa
P. Jefftries
R. A. Jones
W. H. Kapp
G. E. Lee
D. W. Lenk
W. A. Maguire
F. D. Martzloff
G. N. Miller
P. Nortarian
R. Odenberg
J. Osterhout
T. J. Rozek
K. B. Stump
E. Taylor
S. G. Whisenant
J. J. Woodworth
T. A. Wolfe

At the time this guide was completed, the IEEE Neutral Grounding Devices Working Group had the following members:

Douglas C. Dawson, *Chair*

C. L. Ballentine
A. Benge
J. J. Burke
D. W. Jackson
E. Knapp
J. L. Koepfinger
G. E. Lee
S. Mazumdar
E. R. Taylor, Jr.
S. G. Whisenant

Copyright © 2001 IEEE. All rights reserved.

Copyright The Institute of Electrical and Electronics Engineers, Inc.
Provided by IHS under license with IEEE
No reproduction or networking permitted without license from IHS
Not for Resale

The following members of the balloting committee voted on this guide:

C. L. Ballentine
J. S. Bonnesen
J. J. Burke
J. S. Case
S. R. Chano
J. F. Christensen
B. R. Cole
D. C. Dawson
E. P. Dick
M. Fortin
J. Funke
E. Gallo
G. S. Haralampu
J. Harrison
S. P. Hensley
A. R. Hileman
D. W. Jackson
B. Johnnerfelt
J. L. Koepfinger
B. Leuenberger
W. A. Maguire
N. P. McQuin
J. H. Nelson
R. Odenberg
J. C. Osterhout
C. O. Peixoto
P. E. Pool
R. V. Rebbapragada
A. W. Rebeck
T. J. Rozek
E. J. Tarasiewicz
E. R. Taylor, Jr.
A. Vitols
R. Walling
S. G. Whisenant
J. S. Williams
J. Wilson, Jr.
J. J. Woodworth
D. M. Worden

When the IEEE-SA Standards Board approved this standard on 21 September 2000, it had the following membership:

Donald N. Heirman, *Chair*

James T. Carlo, *Vice Chair*

Judith Gorman, *Secretary*

Satish K. Aggarwal
Mark D. Bowman
Gary R. Engmann
Harold E. Epstein
H. Landis Floyd
Jay Forster*
Howard M. Frazier
Ruben D. Garzon
James H. Gurney
Richard J. Holleman
Lowell G. Johnson
Robert J. Kennelly
Joseph L. Koepfinger*
Peter H. Lips
L. Bruce McClung
Daleep C. Mohla
James W. Moore
Robert F. Munzner
Ronald C. Petersen
Gerald H. Peterson
John B. Posey
Gary S. Robinson
Akio Tojo
Donald W. Zipse

*Member Emeritus

Also included is the following nonvoting IEEE-SA Standards Board liaison:

Alan Cookson, *NIST Representative*

Donald R. Volzka, *TAB Representative*

Don Messina

IEEE Standards Project Editor

IEEE Green Book is a registered trademark of the Institute of Electrical and Electronics Engineers, Inc.

National Electrical Safety Code and NESC are both registered trademarks and service marks of the Institute of Electrical and Electronics Engineers, Inc.

Copyright © 2001 IEEE. All rights reserved.
Copyright The Institute of Electrical and Electronics Engineers, Inc.
Provided by IHS under license with IEEE
No reproduction or networking permitted without license from IHS
Not for Resale

Contents

1. Overview 1

1.1 Scope 1
1.2 Purpose 1

2. References 1

3. Definitions 2

4. Basic considerations 2

4.1 Goals of system grounding 2
4.2 System neutral grounding vs. apparatus neutral grounding 3

5. Means of grounding 3

5.1 Solidly grounded 3
5.2 Inductance grounded 3
5.3 Resistance grounded 4
5.4 Resonant grounded 4
5.5 Capacitance grounded 4
5.6 Ungrounded (isolated neutral) 5
5.7 Neutral grounding equipment 5

6. Classes of grounding 5

6.1 Grounded system 5
6.2 Quantitative determination of classes of grounding 5
6.3 Coefficient of grounding 5
6.4 Earth-fault factor (EFF) 6

7. Characteristics of the classes of grounding 7

7.1 Effectively grounded 7
7.2 Noneffectively grounded 8
7.3 Resistance grounded 8
7.4 Inductance grounded 8
7.5 Resonant grounded 10
7.6 Ungrounded systems 10

8. Annexes and bibliography 11

Annex A (informative) Calculation of coefficients of grounding 12

Annex B (informative) Identity of ground and neutral conductors 20

Annex C (informative) Bibliography 24

--`,,`,`-`-`,,`,,`,`,,`---

Copyright © 2001 IEEE. All rights reserved.

Copyright The Institute of Electrical and Electronics Engineers, Inc.
Provided by IHS under license with IEEE
No reproduction or networking permitted without license from IHS

Not for Resale

and Electronics Engineers, Inc.
IEEE
itted without license from IHS
Not for Resale

IEEE Guide for the Application of Neutral Grounding in Electrical Utility Systems—Part I: Introduction

1. Overview

1.1 Scope

This guide is intended for application to three-phase electrical utility systems. This is Part I of the five-part IEEE C62.92 series. This part provides definitions and considerations that are general to all types of electrical utility systems. The remaining four parts provide specific guidance on synchronous generator systems (IEEE Std C62.92.2-1989), generating station auxiliary systems (IEEE Std C62.92.3-1993), distribution systems (IEEE Std C62.92.4-1991), and transmission and subtransmission systems (IEEE Std C62.92.5-1992).

1.2 Purpose

This guide presents basic considerations for the selection of neutral grounding parameters that will provide for the control of overvoltage and ground-fault current on all parts of three-phase electrical utility systems.

2. References

This guide shall be used in conjunction with the following publications. When the following publications are superseded by an approved revision, the revision shall apply.

IEEE Std 80-2000, IEEE Guide for Safety in AC Substation Grounding.[1]

IEEE Std 142-1991, IEEE Recommended Practice for Grounding of Industrial and Commercial Power Systems (*IEEE Green Book*™).

[1]IEEE publications are available from the Institute of Electrical and Electronics Engineers, Inc., 445 Hoes Lane, P.O. Box 1331, Piscataway, NJ 08855-1331, USA (http://standards.ieee.org/).

Copyright © 2001 IEEE. All rights reserved.

Copyright The Institute of Electrical and Electronics Engineers, Inc.
Provided by IHS under license with IEEE
No reproduction or networking permitted without license from IHS
Not for Resale

ASC C2-1997, Accredited Standards Committee, National Electrical Safety Code® (NESC®).[2]

IEEE Std C62.92.2-1989 (Reaff 2000), IEEE Guide for the Application of Neutral Grounding in Electrical Utility Systems—Part II: Grounding of Synchronous Generator Systems.

IEEE Std C62.92.3-1993 (Reaff 2000), IEEE Guide for the Application of Neutral Grounding in Electrical Utility Systems—Part III: Generator Auxiliary Systems.

IEEE Std C62.92.4-1991 (Reaff 1996), IEEE Guide for the Application of Neutral Grounding in Electrical Utility Systems—Part IV: Distribution Systems.

IEEE Std C62.92.5-1992 (Reaff 1997), IEEE Guide for the Application of Neutral Grounding in Electrical Utility Systems—Part V: Transmission Systems and Subtransmission Systems.

3. Definitions

For the purpose of this guide the following terms and definitions apply. Terms other than those defined here have standard definitions as listed in *The Authoritative Dictionary of IEEE Standards Terms*, Seventh Edition [B10].[3]

3.1 class of grounding: A specific range or degree of grounding; e.g., effectively and noneffectively.

3.2 means of grounding: The physical devices by which various degrees of grounding are achieved; e.g., inductance grounding, resistance grounding, or resonant grounding.

4. Basic considerations

There is no one simple answer to the problem of grounding. Each of a number of possible solutions to a grounding problem has at least one feature that is outstanding, but which is obtained at some sacrifice of other features that may be equally worthy. Thus, the selection of the class and means of grounding is often a compromise between somewhat conflicting solutions (see IEEE Tutorial Course [B17]).

4.1 Goals of system grounding

The basic goals in selecting a grounding scheme for any given system are as follows:

a) Voltage ratings and degree of surge-voltage protection available from surge arresters

b) Limitation of transient line-to-ground overvoltages (see Generator Grounding Guide [B2], and IEEE Tutorial Course [B17])

c) Sensitivity and selectivity of the ground-fault relaying

d) Limitation of the magnitude of the ground-fault current

e) Safety (see Accredited Standards Committee C2-1997 (National Electrical Safety Code®) (NESC®) and IEEE Std 80-2000)[4]

[2]The NESC is available from the Institute of Electrical and Electronics Engineers, 445 Hoes Lane, P.O. Box 1331, Piscataway, NJ 08855-1331, USA (http://standards.ieee.org/).

[3]The numbers in brackets correspond to those of the bibliography in Annex C.

[4]For more information on references see Clause 2.

Copyright © 2001 IEEE. All rights reserved.
Copyright The Institute of Electrical and Electronics Engineers, Inc.
Provided by IHS under license with IEEE
No reproduction or networking permitted without license from IHS
Not for Resale

These basic goals, when properly evaluated, can have a significant influence on system economics, details of system design and physical layout, and service continuity.

4.2 System neutral grounding vs apparatus neutral grounding

In power engineering, it is common to speak of *grounding the system neutral* either directly or through an impedance. Actually, of course, the *system* neutral is a convenient fiction, not a physical point or conductor, and cannot be physically connected to ground. It is the neutral grounding of specific pieces of power-system apparatus, especially power transformers and generators, that effects system neutral grounding.

In this guide, the term *means of grounding* is used to describe the particular technique used to ground the neutral of a specific piece of apparatus. For example, *resistance grounding* is a means of grounding the neutral of a piece of apparatus, in this case by means of a resistor. The term *class of grounding* is used to categorize system grounding in terms of its performance characteristics.

In a simple power system, like the typical distribution system or power-plant auxiliary system, where a single transformer serves as both the power source and system-neutral grounding point, the means of grounding of that transformer neutral defines the grounding class of the system. For example, a system supplied by a single transformer whose neutral is grounded through a resistance would typically be classed as a *resistance-grounded system.*

In more complex systems, like typical high voltage (HV) or extra-high voltage (EHV) transmission systems, there are many pieces of apparatus (transformers, capacitor banks, reactors, etc.) that may have grounded neutrals. In such multiple-grounded systems, the class of grounding of the system is determined by the cumulative effect of all the grounding points. If most of the major transformer neutrals are grounded by similar means, then the system may loosely be described as being of one class (e.g., an *inductance grounded system*). In general, where there are multiple grounding points of different types of apparatus and different means of apparatus neutral grounding, the class of grounding can only be determined by the zero-sequence to positive-sequence symmetrical component ratios, as viewed from a selected location. (See Clause 7 and Table 1.) (For further information see Clarke [B6], and Wagner and Evans [B22].)

5. Means of grounding

5.1 Solidly grounded

Definition: Connected directly to ground through an adequate ground connection in which no impedance has been inserted intentionally.

The term *grounded solidly,* though commonly used, may be somewhat misleading since a transformer may have its neutral connected solidly to ground, and yet the resulting zero-sequence impedance (see Figure 1) could be so high, due to the system or transformer characteristics, that high phase-to-ground voltages would develop during ground-fault conditions. Instead, so as to define grounding positively and logically as to degree, the term *effectively grounded* has come into use, as is discussed in 7.1.

5.2 Inductance grounded

Definition: Grounded through an impedance, the principal element of which is inductance. This class of grounding is sometimes loosely referred to as *reactance grounded.* The class is often subdivided into *low-* or *high-inductance* categories.

Copyright © 2001 IEEE. All rights reserved.

Copyright The Institute of Electrical and Electronics Engineers, Inc.
Provided by IHS under license with IEEE
No reproduction or networking permitted without license from IHS Not for Resale

The inductance may either be inserted directly in the neutral connection to ground or obtained indirectly by increasing the reactance of the ground return circuit. The latter may be done by intentionally increasing the zero-sequence reactance of apparatus connected to ground or by omitting some of the possible connections from apparatus neutrals to ground.

5.3 Resistance grounded

Definition: Grounded through an impedance, the principal element of which is resistance. This class is frequently subdivided into *low-* or *high-resistance* categories.

The resistance may be inserted either directly in the connection to ground or indirectly as, for example, the following:

a) In the secondary of a transformer, the primary of which is connected between neutral and ground.

b) In the corner of a broken-delta connected secondary of a wye-delta grounding transformer.

(See IEEE Std C62.92.2-1989 and IEEE Std C62.92.3-1993 for application information on resistance grounding.)

It should be noted that a grounding resistor may have a considerable inherent inductance. For example, a cast-iron grid resistor may have a power factor of 98% or less, resulting in a reactance of about 20% of the resistance, at system frequency (see T&D Reference Book [B5]).

5.4 Resonant grounded

Definition: Inductance grounded through such values of reactance that, during a fault between one of the conductors and ground, the power-frequency inductive current flowing in the grounding inductance(s) and the power-frequency capacitance current flowing between the unfaulted conductors and ground are substantially equal in magnitude and 180° out of phase. Therefore, they almost cancel each other in the fault. The type of grounding inductor used is commonly referred to as a *ground fault neutralizer, arc-suppression coil, or Peterson coil* (see Transmission Grounding Guide [B3], and Willheim and Waters [B23]).

It is expected that the quadrature component of the rated-frequency, single-phase-to-ground fault current will be so small that an arcing fault in air will be self-extinguishing. See Ground Fault Neutralizer Guide [B8], and Willheim and Waters [B23] for application information about resonant grounding in transmission and substransmission systems; and IEEE Std C62.92.2-1989 for application to synchronous generator grounding.

5.5 Capacitance grounded

Definition: Grounded through an impedance, the principal element of which is capacitance.

Capacitance is seldom, if ever, inserted directly in a connection to ground for system grounding purposes. However, capacitance may be connected to ground for voltage surge front-of-wave sloping purposes. Also, neutrals of shunt capacitor banks have been connected solidly to ground on otherwise ungrounded systems. Such applications should be carefully analyzed for overvoltages during fault conditions (see Ground Fault Neutralizer Guide [B8], and Peterson [B20]). Capacitance grounding should be avoided, or carefully analyzed, for resonance conditions or increased fault current.

Copyright © 2001 IEEE. All rights reserved.
Copyright The Institute of Electrical and Electronics Engineers, Inc.
Provided by IHS under license with IEEE
No reproduction or networking permitted without license from IHS
Not for Resale

5.6 Ungrounded (isolated neutral)

Definition: A system, circuit, or apparatus without an intentional connection to ground, except through voltage-indicating or measuring devices, or other very-high-impedance devices (see IEEE Tutorial Course [B17]).

An ungrounded system is coupled to ground through the distributed capacitance of its phase conductors and machine windings.

5.7 Neutral grounding equipment

Requirements and tests for neutral grounding devices may be found in IEEE Std 32-1972 [B11].

6. Classes of grounding

6.1 Grounded system

A system that is a combination of lines, cables, or conductors with apparatus may be broadly classified as either grounded or ungrounded. A grounded system is a system in which at least one conductor (usually the neutral point of a transformer or generator winding) is intentionally connected to ground either directly or through an impedance. A system grounded through an impedance is referred to generically as an *impedance grounded* system.

6.2 Quantitative determination of classes of grounding

Various classes of grounding are available to the system designer, each having a unique set of attributes. The response characteristics of the various classes of grounding may be defined or classified in terms of the ratios of symmetrical component parameters, such as the positive-sequence reactance X_1, the negative-sequence reactance X_2, the zero-sequence reactance X_0, the positive-sequence resistance R_1, the negative-sequence resistance R_2, and the zero-sequence resistance R_0 (see Clarke [B6], Wagner and Evans [B22], and Willheim and Waters [B23]).

To facilitate an understanding of this approach, reference is made to the simplified, idealized three-phase circuit in Figure 1 and its equivalent sequence diagram for a single-line-to-ground fault as shown in Figure 2. Subscripts 1, 2, and 0 indicate positive-, negative-, and zero-sequence parameters, respectively. Note that this conventional representation does not include all impedances in the ground current path and may not give conservative results in all cases. (See Annex B for more information on this topic.)

6.3 Coefficient of grounding

The term *coefficient of grounding* (COG) is used in system grounding practice. COG is defined as 100% × E_{LG}/E_{LL}. E_{LG} is the highest root-mean-square (rms), line-to-ground power-frequency voltage on a sound phase, at a selected location, during a line-to-ground fault affecting one or more phases. E_{LL} is the line-to-line power-frequency voltage that would be obtained, at the selected location, with the fault removed. COG for three-phase systems are calculated from the phase-sequence impedance components, as viewed from the fault location. The COG is useful in the selection of a surge arrester rating for a selected location (see IEEE Std 32-1972 [B11], IEEE Std C62.2-1987 [B14], IEEE Std C62.22-1997 [B15], and IEEE Tutorial Course [B17]).

Copyright © 2001 IEEE. All rights reserved.

Copyright The Institute of Electrical and Electronics Engineers, Inc.
Provided by IHS under license with IEEE
No reproduction or networking permitted without license from IHS Not for Resale

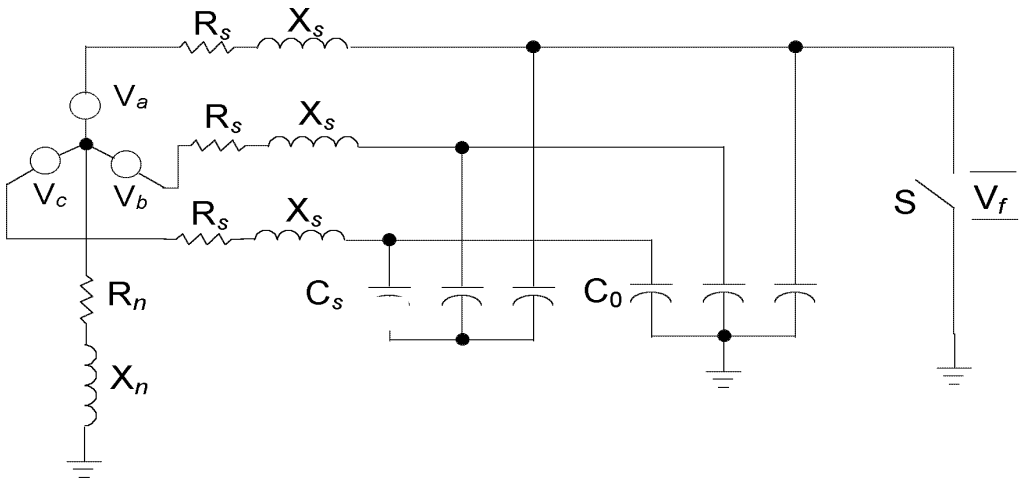

$$C_1 = C_s + C_0 ; \qquad C_g = 3C_0$$

$$X_{Cs} = \frac{1}{\omega C_s} ; \quad X_{Cg}/3 = \frac{1}{\omega C_g/3} ; \quad X_{Cg} = \frac{1}{\omega C_g} ; \quad \omega = 2\pi f$$

NOTE—

C_g is the total system capacitance to ground and is obtained by connecting all three phases together and measuring the capacitance with the neutral grounding branch open-circuited.

$C_g/3$ is the grounded-wye partial, or zero-sequence, capacitance of the system.

C_s is the ungrounded wye equivalent of the interphase partial capacitances of the system, obtained by subtracting the zero-sequence capacitance $C_g/3$ from the positive sequence capacitance C_1.

f is frequency in hertz.

V_f is the prefault line-to-ground voltage at the fault, the energization voltage, shown in Figure 2.

Figure 1—Idealized system

6.4 Earth-fault factor (EFF)

The term *earth-fault factor* (EFF) is, to a limited extent, now used instead of COG. At a selected location on a three-phase system, and for a given system configuration, the EFF is the ratio of the highest rms line-to-ground power-frequency voltage on a sound phase during a fault to ground (affecting one or more phases at any point) to the rms power-frequency voltage that would be obtained at the selected location with the fault removed (see IEEE Std 1313.1-1996 [B16]). Thus, the EFF is related to the COG by $\sqrt{3}$; as shown in Equation (1).

$$\text{EFF} = \sqrt{3}\,\frac{COG}{100} \tag{1}$$

where

EFF is the earth-fault factor,

COG is the coefficient of grounding expressed as a percentage.

Copyright © 2001 IEEE. All rights reserved.
Copyright The Institute of Electrical and Electronics Engineers, Inc.
Provided by IHS under license with IEEE
No reproduction or networking permitted without license from IHS
Not for Resale

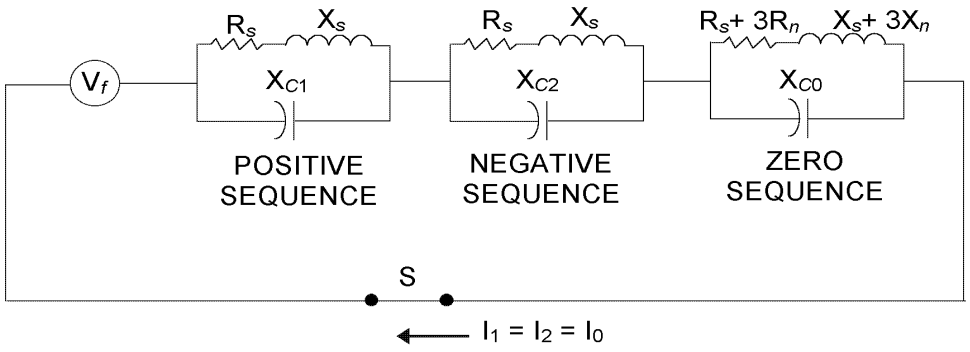

NOTE—

$R_s + jX_s$ is the same as seen by all three sequence networks

$$X_{C1} = X_{C2} = \frac{1}{\omega C_s + \omega C_g/3}; \quad X_{C0} = \frac{1}{\omega C_g/3}; \quad \omega = 2\pi f$$

$$\frac{1}{R_1 + jX_1} = \frac{1}{R_2 + jX_2} = \frac{1}{R_s + jX_s} - \frac{1}{jX_{C1}} \approx \frac{1}{R_s + jX_s}$$

$$\frac{1}{R_0 + jX_0} = \frac{1}{(R_s + 3R_n) + j(X_s + 3X_n)} - \frac{1}{jX_{C0}} \approx \frac{1}{(R_s + 3R_n) + j(X_s + 3X_n)}$$

$$V_f = V_a \times \frac{-jX_{C1}}{R_s + j(X_s - X_{C1})} \approx V_a$$

where

V_f is the Thevenin circuit prefault voltage

V_a is the line-to-neutral source of Figure 1

$3I_0$ is the fault current through closed switch S of Figure 1

$\approx$ indicates the result when capacitance is negligible

Figure 2—Sequence diagram for line-to-ground fault, through closed switch S of Figure 1

7. Characteristics of the classes of grounding

Ratios of the symmetrical component parameters are used to characterize the classes of grounding. These characteristics, and the unique set of attributes defining the various classes of grounding, are given in Table 1 and briefly discussed in 7.1, 7.2, 7.3, 7.4, 7.5, and 7.6. Table 1 contains a general classification of grounding, together with the associated class, fault current, and transient voltage characteristics.

7.1 Effectively grounded

Definition: Grounded through a sufficiently low impedance (inherent or intentionally added, or both) so that the COG does not exceed 80%.

Copyright © 2001 IEEE. All rights reserved.

Copyright The Institute of Electrical and Electronics Engineers, Inc.
Provided by IHS under license with IEEE
No reproduction or networking permitted without license from IHS
Not for Resale

This value is obtained approximately when, for all system conditions, the ratio of the zero-sequence reactance to the positive-sequence reactance, $(X_0/X_{1)}$, is positive and ≤ 3, and the ratio of zero-sequence resistance to positive-sequence reactance, (R_0/X_1), is positive and < 1 (see IEEE Std C62.1-1989 [B12], IEEE Std C62.2-1987 [B13], IEEE Tutorial Course [B17], and Willheim and Waters [B23]). Effective grounding is frequently employed in distribution and transmission systems (see IEEE Std C62.92.4-1991 and IEEE Std C62.92.5-1992).

7.2 Noneffectively grounded

Definition: Any system or location on a system where the COG exceeds 80%.

Note that, because of the impedance of lines and cables, certain locations or portions of an effectively-grounded system may be noneffectively grounded, even though the majority of the system is effectively grounded. In general, all of the impedance-grounded systems listed in 7.3, 7.4, 7.5, and 7.6 are noneffectively grounded.

7.3 Resistance grounded

Definition: A system that is predominately grounded by means of resistance.

When a system is resistance grounded, the zero-sequence reactance viewed from the fault may be inductive or capacitive, depending on the size, number, and location of the neutral-grounding resistors and the capacitance to ground of the remaining system. With low-resistance grounding X_0 will ordinarily be positive, the fundamental-frequency phase-to-ground voltage will, in general, not exceed normal line-to-line voltage, and the neutral-to-ground voltage will not exceed normal line-to-neutral voltage.

If a system is low-resistance grounded, the natural-frequency voltages at the initiation of a ground fault are significantly reduced. The phase voltages are essentially the fundamental-frequency voltages. The fundamental-frequency voltages with low-resistance grounding are generally higher than the fundamental-frequency voltages obtained with corresponding values of neutral-grounding inductive reactance.

With high-resistance grounding, X_0 may be negative. In that event, phase-to-ground voltages may be greater than normal line-to-line voltages, and neutral-to-ground voltages may be greater than normal line-to-neutral voltages (see Clarke, Crary, and Peterson [B7], and Peterson [B20]).

7.4 Inductance grounded

An inductance-grounded system is one which is predominately grounded by means of neutral inductors or grounding transformers, or by omitting connections to ground on some of the transformers of a multiple-grounded system.

When a system is grounded through an inductance (less than that of a ground-fault neutralizer), the zero-sequence reactance viewed from the fault is inductive rather than capacitive, and the zero-sequence resistance is relatively small. Accordingly, during a fault, the fundamental-frequency phase-to-ground voltages will not exceed normal line-to-line voltage and the neutral-to-ground voltage will not exceed normal line-to-neutral voltage.

Following the initiation of a fault, simple, linear systems with inductance-grounded neutrals will have maximum transient voltages to ground on the unfaulted phases not exceeding 2.73 times normal. The voltage to ground at the neutral will not exceed 1.67 times normal line-to-neutral voltage (see Clarke, Crary, and Peterson [B7], and Peterson [B20]).

Copyright © 2001 IEEE. All rights reserved.
Copyright The Institute of Electrical and Electronics Engineers, Inc.
Provided by IHS under license with IEEE
No reproduction or networking permitted without license from IHS
Not for Resale

Table 1—Characteristic of grounding

Grounding classes and means	Ratios of symmetrical component parameters Note (1)			Percent fault current Note (2)	Per unit transient LG voltage Note (3)	Reference
	X_0/X_1	R_0/X_1	R_0/X_0			
A. Effectively—Note (4)						
1. Effective	0–3	0–1	–	> 60	≤ 2	[B3]
2. Very effective	0–1	0–0.1	–	> 95	< 1.5	
B. Noneffectively						
1. Inductance						
Low inductance	3–10	0–1	–	> 25	< 2.3	[B3]
High inductance	>10		< 2	< 25	≤ 2.73	[B3]
2. Resistance						
Low resistance	0–10		≥ 2	< 25	< 2.5	
High resistance—Note (8)		>100	≤ (–1)	< 1	≤ 2.73	[B7], [B17]
3. Inductance and resistance	>10	–	> 2	< 10	≤ 2.73	
4. Resonant—Note (5)		–	–	< 1	≤ 2.73	
5. Ungrounded capacitance						
Range A—Note (6)	–∞ to –40	–	–	< 8	≤3	[B6], [B20]
Range B—Note (7)	–40 to 0	_	–	> 8	> 3	[B6], [B20]

NOTES

1—Values of the coefficient of grounding (COG) corresponding to various combinations of these ratios are shown in the figures in Annex A. COG affects the selection of surge arrester ratings (see IEEE Std C62.2-1987 [B13] and IEEE C62.22-1997 [B15]).

2—Ground fault current in percentage of the three-phase short circuit value [IEEE Std 142-1991].

3—Transient line-to-ground voltage, following the sudden application of a fault, in per unit of the crest of the prefault line-to-ground operating voltage, from (Clarke, Crary, and Peterson [B7], and Peterson [B20]), for a simple, linear network.

4—In linear circuits, Class A1 limits the fundamental line-to-ground voltage on an unfaulted phase to 138% of the prefault voltage; Class A2 to less than 110%.

5—See 7.5, Willheim and Waters [B23], and precautions given in IEEE Std C62.92.2-1989, IEEE Std C62.92.3-1993, IEEE Std C62.92.4-1991, and IEEE Std C62.92.5-1992.

6—Usual isolated neutral (ungrounded) system for which the zero-sequence reactance is capacitive (negative).

7—Refer to 7.6. Each case should be evaluated on its own merits.

8—In a high-resistance grounded system, R_s, X_s, and X_n are negligible compared to R_n and X_{Cg}.
$R_0 + jX_0 = 3R_n(-j3X_{Cg}) / (3R_n - j3X_{Cg})$. Thus $R_0 / X_0 = -X_{Cg} / R_n$. For a properly designed high-resistance system, $R_n \leq X_{Cg}$, and therefore $R_0 / X_0 \leq (-1)$.

Copyright © 2001 IEEE. All rights reserved.

Copyright The Institute of Electrical and Electronics Engineers, Inc.
Provided by IHS under license with IEEE
No reproduction or networking permitted without license from IHS
Not for Resale

7.5 Resonant grounded

A resonant-grounded system is one which is grounded through one or more ground-fault neutralizers (see Willheim and Waters [B23]). When a system is to be grounded through a ground-fault neutralizer, the neutral inductance provided by the neutralizer coil is adjusted [Equation (2)] so that,

$$3X_{Cg} = 3X_n + X_s \tag{2}$$

where

X_{Cg} is the capacitive reactance of system to ground ,

C_g is the *total* capactitance of system to ground ,

X_n is the neutral reactance.

(See Figure 1 and Figure 2 for further definitions of X_{Cg} and X_n .)

For resonant-grounded systems, R_s and X_s can generally be neglected because they are very small in comparison to X_n and X_{Cg} . Thus, when adjusted to resonance, $X_n = X_{Cg}$.

$R_0 + jX_0$ is the equivalent series representation of the parallel inductance/capacitance network, as defined in Figure 3. With R_s neglected, X_0 approaches infinity, since the zero-sequence network is parallel resonant. With resistance included, R_0 is very large with respect to X_0 . Based on either assumption, the zero-sequence network presents a very high impedance to the flow of 60 Hz current through a fault to ground. The fundamental-frequency voltages on the unfaulted phases, during a line-to-ground fault, are essentially line-to-line voltages. They are not increased by the presence of fault resistance. The maximum transient voltages to ground of the unfaulted phases are less than 2.73 times normal and the neutral-to-ground voltage is less than 1.67 times normal line-to-neutral voltage (see Clarke, Crary, and Peterson [B7], and Peterson [B20]).

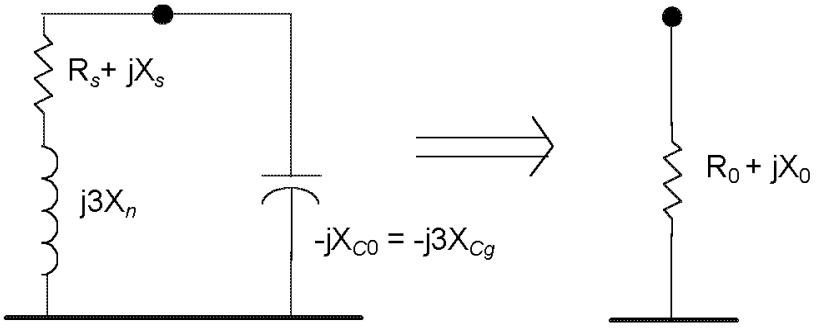

Figure 3—Resonant zero-sequence network

7.6 Ungrounded systems

An ungrounded system is one with no intentional connections to ground except for voltage measuring or surge protection apparatus. In an ungrounded system, X_0 is negative and of the order of magnitude of the zero-sequence capacitive reactance, while R_0/X_0 is relatively small. Under fault conditions, the fundamental-frequency phase-to-ground voltages may be in excess of normal line-to-line voltages, and in some cases, particularly when the system is large in extent, these voltages may be considerably higher (see Clarke, Crary, and Peterson [B7], and Peterson [B20]).

Copyright © 2001 IEEE. All rights reserved.
Copyright The Institute of Electrical and Electronics Engineers, Inc.
Provided by IHS under license with IEEE
No reproduction or networking permitted without license from IHS
Not for Resale

There are a number of economic factors and operating practices governing the choice between grounded and ungrounded systems. Ungrounded systems may require higher insulation levels as a result of possible severe transient overvoltages. Abnormal insulation stress may be reduced when X_0/X_1 lies between $-\infty$ and –40.

When X_0/X_1 is in the range of –40 to 0, severe series-resonance overvoltages can occur if the circuit response is linear. However, in ferro-nonlinear circuits involving a saturating transformer, highly distorted, less severe oscillations may be generated over a broad range of negative X_0/X_1 (see Clarke, Crary, and Peterson [B7], and Peterson [B20]). Generally, capacitance grounding and such circuit conditions should be avoided and each case should be carefully analyzed (see Karlicek and Taylor [B18]). However, cases exist showing that ungrounded systems can have satisfactory operating performance.

8. Annexes and bibliography

The figures in Annex A give COG for the ranges of positive X_0/X_1 and R_0/X_1, and generally indicate the ranges of each class. Annex B contains a discussion of the effects and the modeling of earth-return path impedances such as neutral conductors, overhead ground wires, tower footing resistances, and substation ground-grid resistances. Annex C is a bibliography of related standards, texts, and technical papers, some of which are referenced in this guide.

--`,,`,`-`-`,,`,,`,`,,`---
Copyright © 2001 IEEE. All rights reserved.

Copyright The Institute of Electrical and Electronics Engineers, Inc.
Provided by IHS under license with IEEE
No reproduction or networking permitted without license from IHS Not for Resale

Annex A

(informative)

Calculation of coefficients of grounding

The term *coefficient of grounding* (COG) is defined as the ratio of E_{LG}/E_{LL}, expressed as a percentage, of the highest rms line-to-ground power frequency voltage (E_{LG}) on a sound phase, at a selected location, during a fault to earth affecting one or more phases to the line-to-line power frequency voltage (E_{LL}) that would be obtained, at the selected location, with the fault removed. Coefficient of grounding may be calculated from the known impedances of the system and the fault. For this purpose, it is convenient to express the system impedances in terms of their equivalent symmetrical component impedances Z_1, Z_2, and Z_0 (see Clarke [B6], and Wagner and Evans [B22]).

As defined above, the coefficient of grounding for a specific location may vary depending on the type of fault, the fault location, and the impedance in the fault. For the purposes of constructing Figure A.2, Figure A.3, Figure A.4, Figure A.5, and Figure A.6, the following assumptions were made

a) The coefficient of grounding is to be determined for the same location that the fault is placed.

b) The fault type (single or double phase to ground) is that which produces the highest coefficient of grounding.

c) The fault impedance, if any, is purely resistive and has that value which produces the highest coefficient of grounding.

d) The negative sequence impedance of the system at the fault location is equal to the positive sequence impedance $(Z_2 = Z_1)$.

For a system with positive X_0, coefficients of grounding for locations other than the fault location are generally the same as or lower than the coefficient for the fault location. In exceptional circumstances, coefficients may be slightly higher at locations where appreciable capacitive zero sequence current flow through high inductance lines to reach the fault location.

In systems with negative X_0, the coefficient of grounding is generally lowest at the fault location and higher at remote locations. For this reason the usefulness of the coefficient on such systems is limited to systems in which line impedances are negligibly small.

Given these assumptions and the definition above, the quantities that must be calculated to determine the coefficient of grounding are the *a*-phase voltage, V_{aLLG}, for a phase *b*- and *c*-phase-to-ground fault and the *b*- and *c*-phase voltages, V_{bLG} and V_{cLG}, for an *a*-phase-to-ground fault. These faults and their symmetrical component-equivalent networks are shown in Figure A.1.

Copyright © 2001 IEEE. All rights reserved.
Copyright The Institute of Electrical and Electronics Engineers, Inc.
Provided by IHS under license with IEEE
No reproduction or networking permitted without license from IHS
Not for Resale

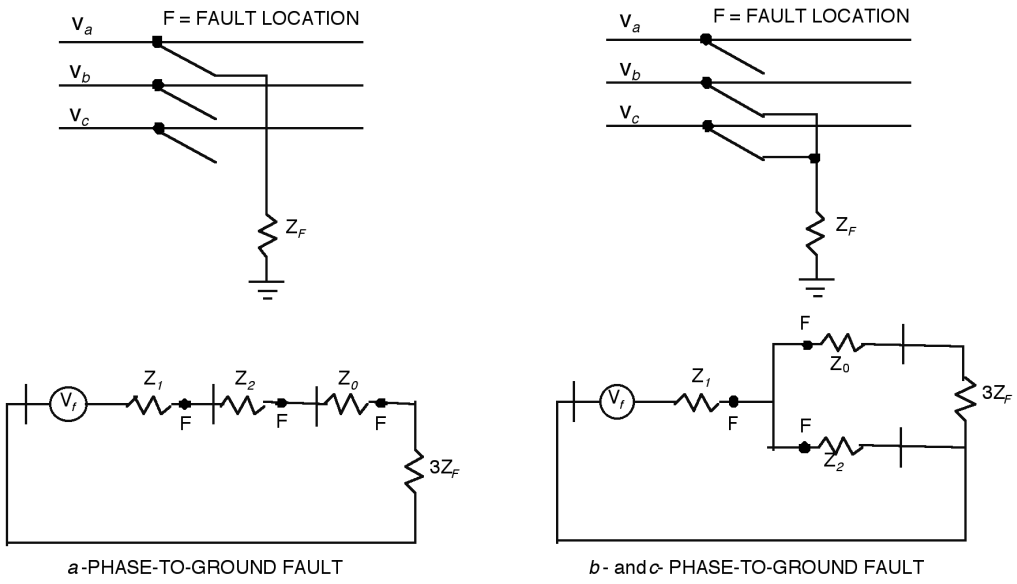

Figure A.1—Symmetrical component equivalent networks for two fault types used in calculation

From Clarke [B6], the significant voltages for these faults are given in Equation (A.1), Equation (A.2), and Equation (A.3):

$$V_{aLLG} = V_f \frac{3Z_2(Z_0 + 2Z_F)}{Z_1Z_2 + (Z_1 + Z_2)(Z_0 + 3Z_F)} \quad \text{(A.1)}$$

$$V_{bLG} = V_f \frac{3a^2ZF - j\sqrt{3}(Z_2 + aZ_0)}{Z_0 + Z_1 + Z_2 + 3Z_F} \quad \text{(A.2)}$$

$$V_{cLG} = V_f \frac{3aZF + j\sqrt{3}(Z_2 + a^2Z_0)}{Z_0 + Z_1 + Z_2 + 3Z_F} \quad \text{(A.3)}$$

where

$$a = -0.5 + j\frac{\sqrt{3}}{2}$$

Letting $Z_2 = Z_1$, $Z_F = R_F$ and rearranging,

$$V_{aLLG} = V_f \frac{3Z_0 + 6R_F}{Z_1 + 2Z_0 + 6R_F} \quad \text{(A.4)}$$

$$V_{bLG} = V_f\left(a^2 - \frac{Z_0 - Z_1}{2Z_1 + Z_0 + 3R_F}\right) \quad \text{(A.5)}$$

Copyright © 2001 IEEE. All rights reserved.

Copyright The Institute of Electrical and Electronics Engineers, Inc.
Provided by IHS under license with IEEE
No reproduction or networking permitted without license from IHS
Not for Resale

$$V_{cLG} = V_f\left(a - \frac{Z_0 - Z_1}{2Z_1 + Z_0 + 3R_F}\right) \quad \text{(A.6)}$$

By the definition of coefficient of grounding,

$$CFG_a = \sqrt{3}\left(\frac{Z_0 + 2R_F}{Z_1 + 2Z_0 + 3R_F}\right) \quad \text{(A.7)}$$

$$CFG_b = \frac{1}{\sqrt{3}}\left(a^2 - \frac{Z_0 - Z_1}{2Z_1 + Z_0 + 3R_F}\right) \quad \text{(A.8)}$$

$$CFG_c = \frac{1}{\sqrt{3}}\left(a - \frac{Z_0 - Z_1}{2Z_1 + Z_0 + 3R_F}\right) \quad \text{(A.9)}$$

In order to eliminate one parameter, it is convenient to divide each impedance by X_1.

Defining the ratios $R_1' = R_1/X_1, R_0' = R_0/X_1, X_0' = X_0/X_1, R_F' = R_F/X_1$

$$CFG_a = \sqrt{3}\left(-\frac{(R_0' + 2R_F') + jX_0'}{R_1' + 2R_0' + 6R_F' + j(1 + 2X_0')}\right) \quad \text{(A.10)}$$

$$CFG_b = \frac{1}{\sqrt{3}}\left(a^2 - \frac{(R_0' - R_1') + j(X_0' - 1)}{(2R_1' + R_0' + 3R_F') + j(X'_0 + 2)}\right) \quad \text{(A.11)}$$

$$CFG_c = \frac{1}{\sqrt{3}}\left(a - \frac{(R_0' - R_1') + j(X_0' - 1)}{(2R_1' + R_0' + 3R_F') + j(X'_0 + 2)}\right) \quad \text{(A.12)}$$

In Figure A.2, Figure A.3, Figure A.4, Figure A.5 and Figure A.6, the curves were obtained by means of a digital computer analysis of Equation (A.10), Equation (A.11), and Equation (A.12). In particular, Equation (A.13), the computer was programmed to find pairs (R'_0, X'_o) for which

$$\text{CFG} = \text{limit } C \text{ and } \partial CFG/\partial R'_F = 0; \text{ or } R'_F > 0 \text{ or } \partial CFG/\partial R'_F \le 0; \quad R'_F = 0 \quad \text{(A.13)}$$

where

CFG is max(CFG_a, CFG_b, CFG_c),

C is a selected limit, for example 80%,

and R'_1 was fixed at five discrete values between 0 and 2 to produce the five graphs.

The partial derivative was simulated by a discrete differential.

It should be recognized that in some circumstances, the assumptions made in producing these curves will not be valid and coefficient of grounding may be higher than shown. For example, a capacitive fault impedance that can be obtained from a ground fault in a capacitor bank could yield a higher coefficient of grounding. Such cases can be analyzed individually by the use of Equation (A.1), Equation (A.2), and Equation (A.3).

Copyright © 2001 IEEE. All rights reserved.
Copyright The Institute of Electrical and Electronics Engineers, Inc.
Provided by IHS under license with IEEE
No reproduction or networking permitted without license from IHS
Not for Resale

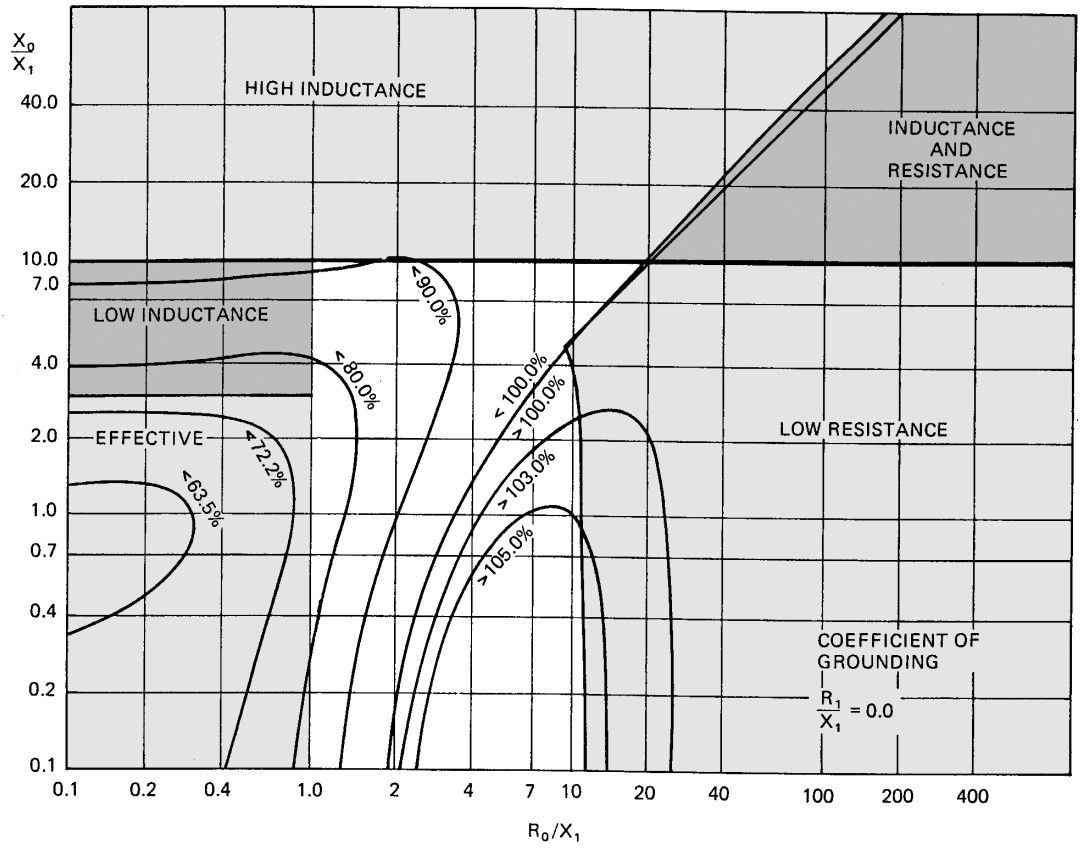

NOTE: Parameters value given against each curve indicate limiting value of coefficient of grounding within area circumscribed by curve. Definitions of grounding class or means is indicated in each area.

Figure A.2—Boundaries for coefficients of grounding for ratio of positive-sequence resistance R_1 to positive-sequence reactance X_1 of 0

Copyright © 2001 IEEE. All rights reserved.

Copyright The Institute of Electrical and Electronics Engineers, Inc.
Provided by IHS under license with IEEE
No reproduction or networking permitted without license from IHS
Not for Resale

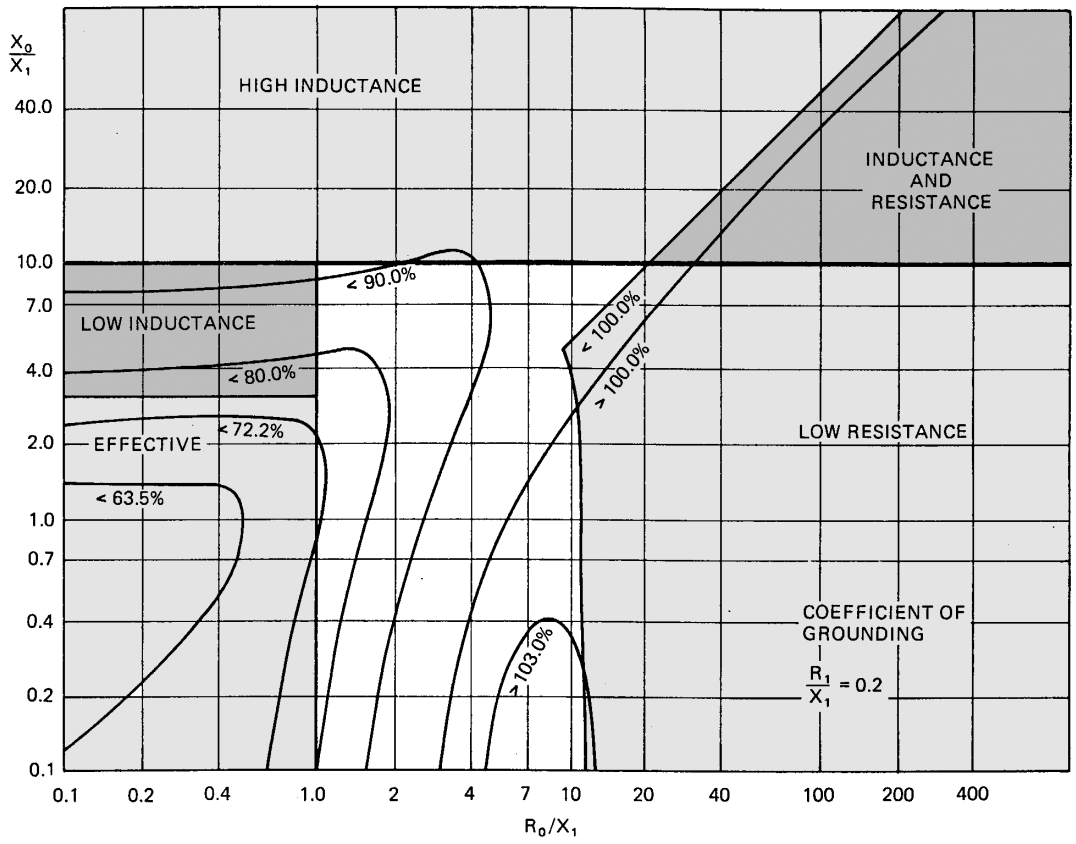

NOTE: Parameters value given against each curve indicate limiting value of coefficient of grounding within area circumscribed by curve. Definitions of grounding class or means is indicated in each area.

Figure A.3—Boundaries for coefficients of grounding for ratio of positive-sequence resistance R_1 to positive-sequence reactance X_1 of 0.2

Copyright © 2001 IEEE. All rights reserved.
Copyright The Institute of Electrical and Electronics Engineers, Inc.
Provided by IHS under license with IEEE
No reproduction or networking permitted without license from IHS
Not for Resale

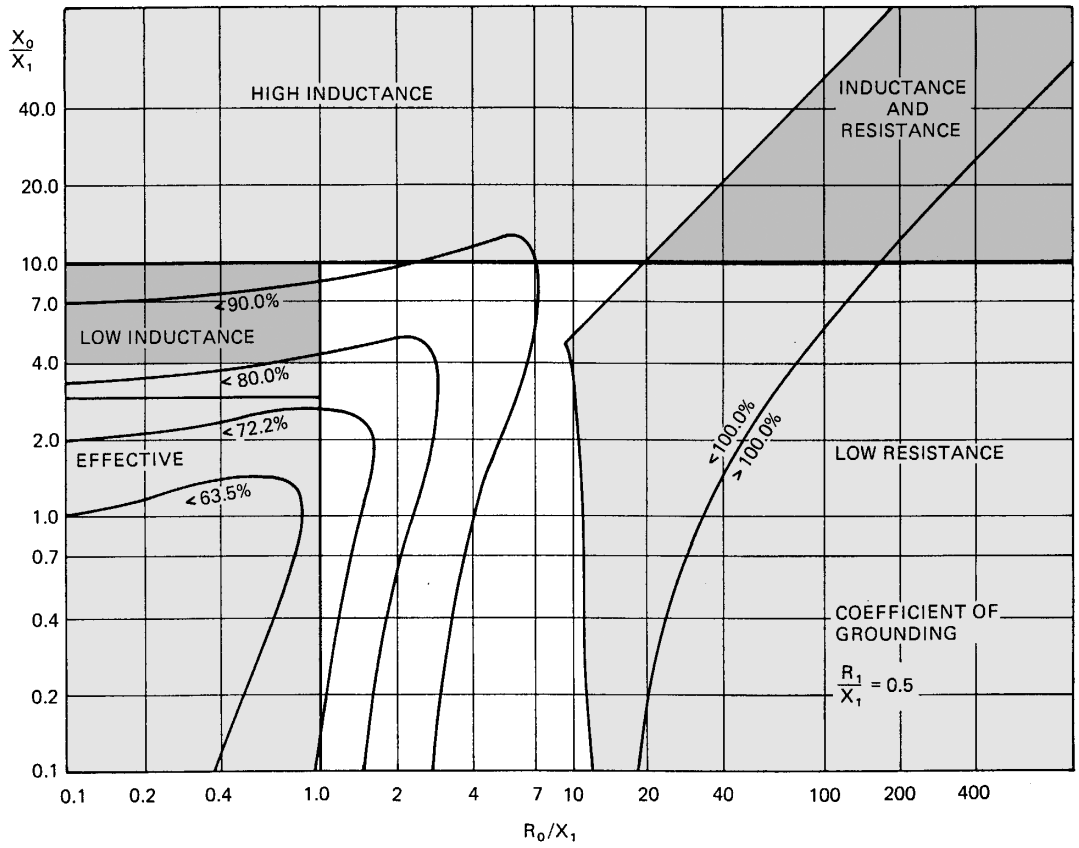

NOTE: Parameters value given against each curve indicate limiting value of coefficient of grounding within area circumscribed by curve. Definitions of grounding class or means is indicated in each area.

Figure A.4—Boundaries for coefficients of grounding for ratio of positive-sequence resistance R_1 to positive-sequence reactance X_1 of 0.5

Copyright © 2001 IEEE. All rights reserved.

Copyright The Institute of Electrical and Electronics Engineers, Inc.
Provided by IHS under license with IEEE
No reproduction or networking permitted without license from IHS
Not for Resale

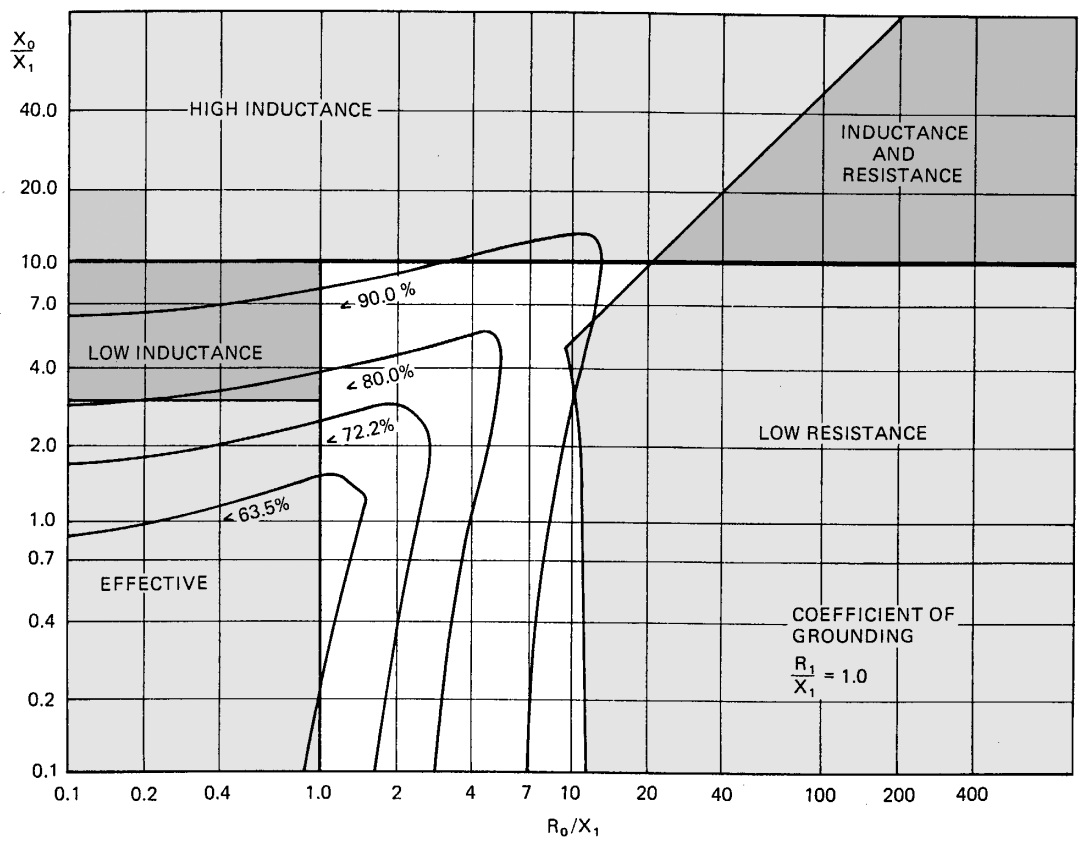

NOTE: Parameters value given against each curve indicate limiting value of coefficient of grounding within area circumscribed by curve. Definitions of grounding class or means is indicated in each area.

Figure A.5—Boundaries for coefficients of grounding for ratio of positive-sequence resistance R_1 to positive-sequence reactance X_1 of 1.0

Copyright © 2001 IEEE. All rights reserved.
Copyright The Institute of Electrical and Electronics Engineers, Inc.
Provided by IHS under license with IEEE
No reproduction or networking permitted without license from IHS
Not for Resale

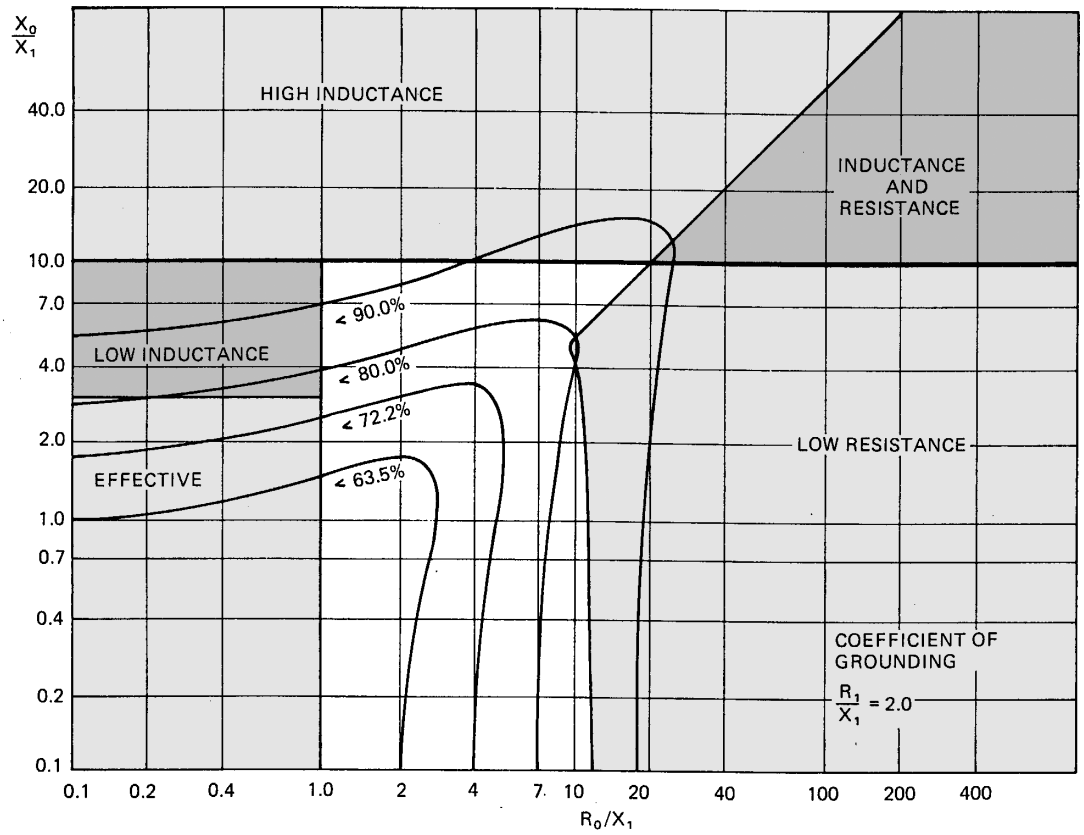

NOTE: Parameters value given against each curve indicate limiting value of coefficient of grounding within area circumscribed by curve. Definitions of grounding class or means is indicated in each area.

Figure A.6—Boundaries for coefficients of grounding for ratio of positive-sequence resistance R_1 to positive-sequence reactance X_1 of 2.0

Copyright © 2001 IEEE. All rights reserved.

Copyright The Institute of Electrical and Electronics Engineers, Inc.
Provided by IHS under license with IEEE
No reproduction or networking permitted without license from IHS
Not for Resale

Annex B

(informative)

Identity of ground and neutral conductors

In the calculation of the zero-sequence impedance of power transmission lines (see IEEE Std C62.92.5-1992) and distribution lines (see IEEE Std C62.92.4-1991), it has been a conventional practice to include simplifying assumptions about the grounding network in order to reduce the complexity of the calculations.

— The impedance of grounding electrodes, such as ground rods, tower footings, and station ground grids to remote ground has been assumed to be negligible. Grounded conductors such as multi-grounded neutrals, cable sheaths, and overhead ground wires are assumed to be perfectly connected to earth.

— The impedance of the earth-return path has been incorporated into the zero-sequence impedance of the line conductors so that the earth can be considered an equipotential surface. A consequence of this assumption is that zero-sequence voltages calculated with respect to local ground are correct; however, the calculations cannot provide zero-sequence voltage at a given point with respect to ground at another point; likewise, differences in ground potential between two points cannot be calculated

Even though computer programs could easily deal with the complexity, these simplifying assumptions persist to the present day because of the following:

a) The data about the impedance of grounding electrodes is not as readily available as conventional line impedance data.

b) It is generally believed that the results of ignoring the grounding impedances are conservative, i.e., fault studies ignoring grounding impedances will yield the highest fault currents and highest temporary overvoltages.

c) The distribution of fault currents in the grounding network and differences in ground potential are generally not considered significant for short-circuit duty and arrester application purposes.

In order to illustrate the significance of these simplifying assumptions, consider the system shown diagramatically in Figure B.1. This system consists of a three-span transmission line, with overhead ground wire, linking two substations with transformers whose neutrals are grounded through inductors. (The overhead ground wire could also represent the multigrounded neutral conductor of a distribution line.)

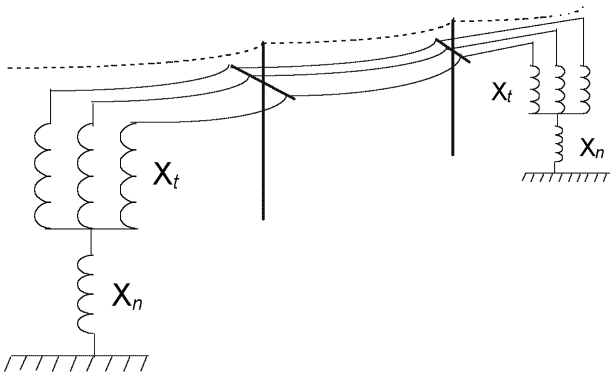

Figure B.1—Diagram of transmission line and substations

Copyright © 2001 IEEE. All rights reserved.
Copyright The Institute of Electrical and Electronics Engineers, Inc.
Provided by IHS under license with IEEE
No reproduction or networking permitted without license from IHS
Not for Resale

Figure B.2 shows the conventional zero-sequence impedance diagram for this system, assuming fully transposed phase conductors. Note that only the zero sequence impedance of the line, the transformers and the neutral inductors are specifically represented. The effect of the ground or multi-grounded neutral conductor and the impedance of the earth-return path are incorporated into the value of Z_{0L} and do not appear directly.

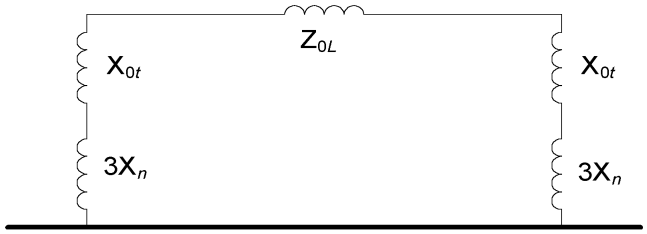

Figure B.2—Conventional simplified zero-sequence network

Figure B.3 shows an expanded version of Figure B.2 in which the identity of the overhead neutral conductor has been retained in the zero-sequence network. Note that only two towers are shown in Figure B.3; most lines would have many more towers. Retaining the identity of the neutral conductor and towers permits separate evaluation of phase-to-neutral and phase-to-ground voltages and fault currents at a particular location. For a phase-to-ground fault, $I_f/3$ enters the network at g and exits at p; for a phase-to-neutral fault, $I_f/3$ enters at n and exits at p. The only information lost by this representation is the difference of earth potential between earth points.

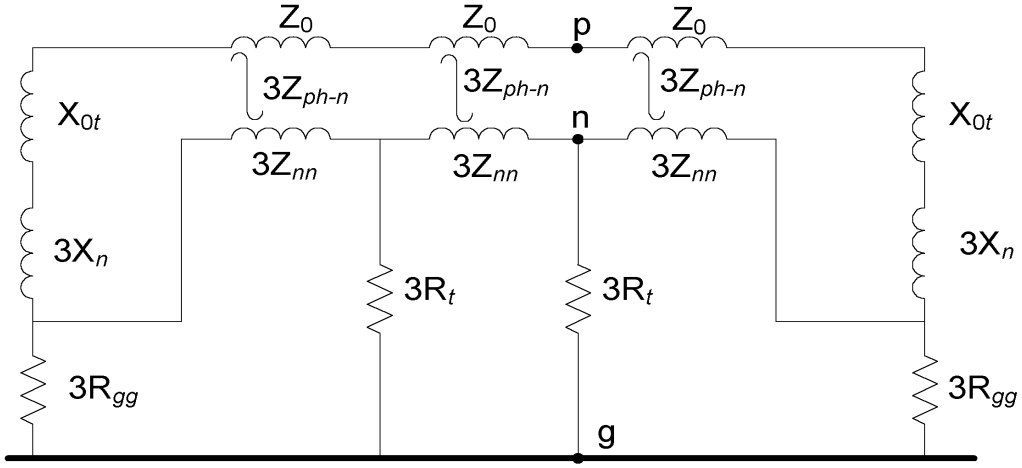

NOTE—

R_{gg} is the substation ground mat resistance to ground

R_t is the tower footing or pole ground resistance to ground

Z_0 is the zero-sequence self-impedance of line section between two towers, ignoring neutral conductor

Z_{nn} is the self-impedance, with earth return, of neutral conductor section between two towers

$Z_{ph\text{-}n}$ is the average mutual impedance, with earth return, from phase conductors to neutral conductor

Figure B.3—Zero-sequence network with OHGW retained

Copyright © 2001 IEEE. All rights reserved.

Copyright The Institute of Electrical and Electronics Engineers, Inc.
Provided by IHS under license with IEEE
No reproduction or networking permitted without license from IHS Not for Resale

Techniques for calculation of Z_0, Z_{nn}, and $Z_{ph\text{-}n}$ are provided in Anderson [B1], Clarke [B6], and Wagner and Evans [B22].

Calculation methods for R_{gg} and R_t are presented in IEEE Std 80-2000.

The method of calculating line impedances with earth return, as presented in Anderson [B1], Clarke [B6], and Wagner and Evans [B22], and most other texts, is based on the work of John R. Carson [B4]. In Carson's work, the impedance of the earth-return path is incorporated into the calculated impedance for the line and equivalent circuits. Carson's formulations do not give differences in potential between ground points.

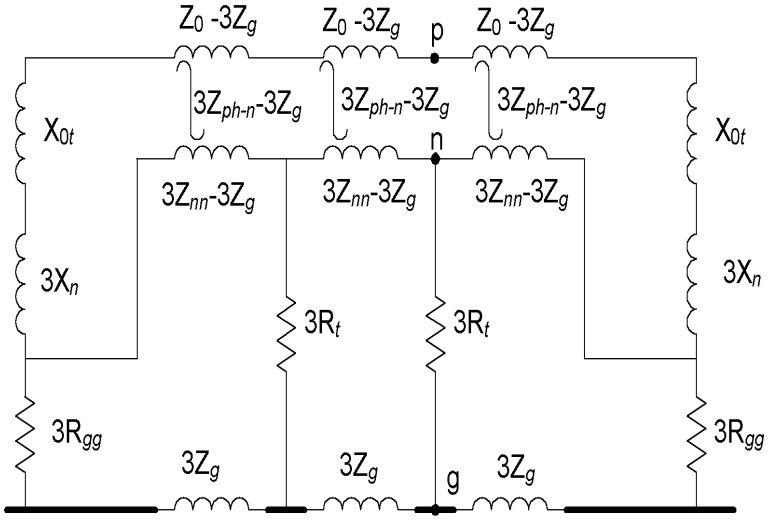

Figure B.4—Zero-sequence impedance diagram with earth-return impedance

Clarke [B6], using the work of Rüdenberg [B21], provides a method of separating the impedance of the earth-return path from the impedance of the line. Figure B.4 shows a detailed zero-sequence diagram based on the model proposed by Clarke. Note that the substation ground-grid resistances, R_{gg}, the tower footing resistances, R_t, the overhead ground wire, n, and the earth-return impedance, Z_g, are all specifically represented.

$$Z_g = 0.0592\frac{f}{60} + j0.1736\frac{f}{60} \cdot \log_{10}\frac{D_e}{h} \quad \text{ohms/km}$$

where

f is the frequency in Hz,

ρ is the earth resistivity in meter-ohms,

D_e is $658.4 \cdot \sqrt{\rho / f}$ in meters,

h is the average conductor height in meters.

The zero-sequence parameters, R_0 and X_0, calculated from Figure B.3 or Figure B.4 for a phase-to-tower fault (terminals p-n) may be significantly different from those for a phase-to-ground fault (terminals p-g). Likewise, the zero-sequence voltage seen by a piece of equipment connected from phase to the tower (p-n) may be different from those seen phase to ground (p-g).

Copyright © 2001 IEEE. All rights reserved.
Copyright The Institute of Electrical and Electronics Engineers, Inc.
Provided by IHS under license with IEEE
No reproduction or networking permitted without license from IHS
Not for Resale

The curves of Annex A show how the coefficient of grounding increases rapidly for $(R_0 / X_{1)} > 1$. Since the inclusion of R_{gg} and R_t tends to increase R_0, detailed representation of a line may be necessary to establish accurate maximum values of the coefficient of grounding.

A recent paper, Mancao, Burke, and Myers [B19], which uses a three-phase analysis program with complete representation of the neutral conductor and grounding impedances, suggests that temporary overvoltages on distribution systems may be significantly higher when grounding impedances are represented.

Copyright © 2001 IEEE. All rights reserved.

Copyright The Institute of Electrical and Electronics Engineers, Inc.
Provided by IHS under license with IEEE
No reproduction or networking permitted without license from IHS Not for Resale

Annex C

(informative)

Bibliography

[B1] Anderson, Paul M., *Analysis of Faulted Power System*s. Ames: Iowa State University Press, 1973.

[B2] "Application Guide for the Grounding of Synchronous Generator Systems," *AIEE Transactions,* June 1953, pp. 517–530.

[B3] "Application Guide on Methods of Neutral Grounding of Transmission Systems," *AIEE Transactions,* Aug. 1953, pp. 663–668.

[B4] Carson, John R., Wave Propagation in Overhead Wires with Ground Return, *Bell System Technical Journal*, vol. 5, 1926, pp. 539–544.

[B5] *Central Station Engineers of the Westinghouse Electric Corporation, Electrical Transmission and Distribution Reference Book, Chapter 19,* "Grounding of Power System Neutrals."

[B6] Clarke, E., *Circuit Analysis of AC Power Systems, Vol. 1*. New York: John Wiley & Sons, Inc., 1943.

[B7] Clarke, E., Crary, S. B., and Peterson, H. A., "Overvoltages During Power System Faults," *AIEE Transactions,* vol. 58, Aug. 1939, pp. 377–385.

[B8] "Guide for the Application of Ground Fault Neutralizers," *AIEE Transactions,* Apr. 1953, pp. 183–190.

[B9] IEEE Committee Report, "Voltage Rating Investigation for Application of Lightning Arresters on Distribution Systems," *IEEE Transactions (Power Apparatus and Systems),* PAS 91, no. 3, May/June 1972, pp. 1067–1074.

[B10] IEEE 100 The Authoritative Dictionary of IEEE Standards Terms, Seventh Editon.

[B11] IEEE Std 32-1972 (Reaff 1997), IEEE Standard Requirements, Terminology, and Test Procedure for Neutral Grounding Devices.

[B12] IEEE Std C62.1-1989 (Reaff 1994), Standard for Gapped Silicon-Carbide Surge Arresters for AC Power Circuits.

[B13] IEEE Std C62.2-1987 (Reaff 1994), Guide for the Application of Gapped Silicon-Carbide Surge Arresters for Alternating Current Systems.

[B14] IEEE Std C62.11-1993, IEEE Standard for Metal-Oxide Surge Arresters for Alternating Current Power Circuits (>1 kV).

[B15] IEEE Std C62.22-1997, IEEE Guide for the Application of Metal-Oxide Surge Arresters for Alternating Current Systems.

[B16] IEEE Std 1313.1-1996, IEEE Standard for Insulation Coordination—Definitions, Principles, and Rules.

[B17] IEEE Tutorial Course, 79EH0144-6 PWR, Surge Protection in Power Systems.

Copyright © 2001 IEEE. All rights reserved.
Copyright The Institute of Electrical and Electronics Engineers, Inc.
Provided by IHS under license with IEEE
No reproduction or networking permitted without license from IHS
Not for Resale

[B18] Karlicek R. F., and Taylor, E. R., Jr., “Ferroresonance of Grounded Potential Transformers on Ungrounded Power Systems,” *AIEE Transactions*, vol. 78, Part IIIA, 1959, pp. 607–618.

[B19] Mancao, R. T., Burke, J. J., and Myers, A., “The Effect of Distribution System Grounding on MOV Selection,” *IEEE Transactions on Power Delivery*, vol. 8, no. 1, Jan. 1993, pp. 139–145.

[B20] Peterson, H. A., *Transients in Power Systems*, Chapter 1. New York: Dover Publications Inc., 1966.

[B21] Rüdenberg, Reinhold, *Elektrische Schaltvorgänge und verwandte Störungserscheinungen in Starkstromanlagen*, Verlag von Julius Springer, Berlin, 1933, p. 231.

[B22] Wagner, C. F., and Evans, R. D., *Symmetrical Components as Applied to the Analysis of Unbalanced Electrical Circuits.* New York: McGraw-Hill, 1933.

[B23] Willheim, R., and Waters, M., *Neutral Grounding in High-Voltage Transmission.* New York: Elsevier Co. (D. Van Nostrand Co.), 1956.

Copyright © 2001 IEEE. All rights reserved.

Copyright The Institute of Electrical and Electronics Engineers, Inc.
Provided by IHS under license with IEEE
No reproduction or networking permitted without license from IHS Not for Resale