IEEE Std C62.36-2000
(Revision of
IEEE Std C62.36-1994)

IEEE Standard Test Methods for Surge Protectors Used in Low-Voltage Data, Communications, and Signaling Circuits

Sponsor

Surge Protective Devices Committee
of the
IEEE Power Engineering Society

Approved 30 June 2000

IEEE-SA Standards Board

Abstract: Methods for testing and measuring the characteristics of surge protectors used in low-voltage data, communications, and signaling circuits with voltages less than or equal to 1000 V rms or 1200 V dc are established. The surge protectors are designed to limit voltage surges, current surges, or both. The surge protectors covered are multiple-component series or parallel combinations of linear or nonlinear elements. Tests are included for characterizing standby performance, surge-limiting capabilities, and surge lifetime. Packaged single gas-tube, air-gap, varistor, or avalanche junction surge-protective devices are not covered, nor are test methods for low-voltage power circuit applications.

Keywords: communications circuits, current limiters, data circuits, electrical protection, signaling circuits, surge protectors, surge-protective devices, voltage limiters

---

The Institute of Electrical and Electronics Engineers, Inc.
3 Park Avenue, New York, NY 10016-5997, USA

Copyright © 2000 by the Institute of Electrical and Electronics Engineers, Inc.
All rights reserved. Published 13 October 2000. Printed in the United States of America.

Print: ISBN 0-7381-2522-9 SH94871
PDF: ISBN 0-7381-2523-7 SS94871

No part of this publication may be reproduced in any form, in an electronic retrieval system or otherwise, without the prior written permission of the publisher.

--`,,`-`-`,,`,,`,`,,`---

Copyright The Institute of Electrical and Electronics Engineers, Inc.
Provided by IHS under license with IEEE
No reproduction or networking permitted without license from IHS Not for Resale

IEEE Standards documents are developed within the IEEE Societies and the Standards Coordinating Committees of the IEEE Standards Association (IEEE-SA) Standards Board. Members of the committees serve voluntarily and without compensation. They are not necessarily members of the Institute. The standards developed within IEEE represent a consensus of the broad expertise on the subject within the Institute as well as those activities outside of IEEE that have expressed an interest in participating in the development of the standard.

Use of an IEEE Standard is wholly voluntary. The existence of an IEEE Standard does not imply that there are no other ways to produce, test, measure, purchase, market, or provide other goods and services related to the scope of the IEEE Standard. Furthermore, the viewpoint expressed at the time a standard is approved and issued is subject to change brought about through developments in the state of the art and comments received from users of the standard. Every IEEE Standard is subjected to review at least every five years for revision or reaffirmation. When a document is more than five years old and has not been reaffirmed, it is reasonable to conclude that its contents, although still of some value, do not wholly reflect the present state of the art. Users are cautioned to check to determine that they have the latest edition of any IEEE Standard.

Comments for revision of IEEE Standards are welcome from any interested party, regardless of membership affiliation with IEEE. Suggestions for changes in documents should be in the form of a proposed change of text, together with appropriate supporting comments.

Interpretations: Occasionally questions may arise regarding the meaning of portions of standards as they relate to specific applications. When the need for interpretations is brought to the attention of IEEE, the Institute will initiate action to prepare appropriate responses. Since IEEE Standards represent a consensus of all concerned interests, it is important to ensure that any interpretation has also received the concurrence of a balance of interests. For this reason, IEEE and the members of its societies and Standards Coordinating Committees are not able to provide an instant response to interpretation requests except in those cases where the matter has previously received formal consideration.

Comments on standards and requests for interpretations should be addressed to:

Secretary, IEEE-SA Standards Board
445 Hoes Lane
P.O. Box 1331
Piscataway, NJ 08855-1331
USA

Note: Attention is called to the possibility that implementation of this standard may require use of subject matter covered by patent rights. By publication of this standard, no position is taken with respect to the existence or validity of any patent rights in connection therewith. The IEEE shall not be responsible for identifying patents for which a license may be required by an IEEE standard or for conducting inquiries into the legal validity or scope of those patents that are brought to its attention.

IEEE is the sole entity that may authorize the use of certification marks, trademarks, or other designations to indicate compliance with the materials set forth herein.

Authorization to photocopy portions of any individual standard for internal or personal use is granted by the Institute of Electrical and Electronics Engineers, Inc., provided that the appropriate fee is paid to Copyright Clearance Center. To arrange for payment of licensing fee, please contact Copyright Clearance Center, Customer Service, 222 Rosewood Drive, Danvers, MA 01923 USA; (978) 750-8400. Permission to photocopy portions of any individual standard for educational classroom use can also be obtained through the Copyright Clearance Center.

--`,,`-`-`,,`,,`,`,,`---

Copyright The Institute of Electrical and Electronics Engineers, Inc.
Provided by IHS under license with IEEE
No reproduction or networking permitted without license from IHS

Not for Resale

Introduction

(This introduction is not a part of IEEE Std C62.36-2000, IEEE Standard Test Methods for Surge Protectors Used in Low-Voltage Data, Communications, and Signaling Circuits.)

This standard was developed to establish methods for testing characteristics and for identifying criteria that determine the end-of-life for surge protectors used in low-voltage data, communications, and signaling circuits. The surge protectors covered are multiple-component series or parallel combinations of linear or nonlinear elements packaged for the purpose of limiting surge voltages, currents, or both.

Since these test methods and criteria apply to a range of surge protectors used in various environmental conditions, and include various combinations of elements, some tests are not appropriate for some surge protectors. Manufacturers and users may determine which tests apply to a surge protector intended for a specific application. These standard test methods should improve the consistency of information on data sheets for the covered surge protectors.

The need for this standard arose because of the following industry trends:

a) The development and proliferation of surge protection devices that use solid-state components to limit current or voltage

b) The manufacture and use of multiple-component surge protectors

c) The increasing use of sensitive electronic circuits that require protection if exposed to surges from the environment

This edition of the standard includes test methods for surge protectors intended for use on coaxial and twinaxial circuits. The tests for insertion loss and return loss are modified to use network analyzers in high-frequency applications. A test has been added to measure the degree of coupling between ports of a multiport surge protector, and the ability of a surge protector to satisfy a pulse mask test. The tests for analog and digital insertion loss have been combined into a single insertion loss test. The test levels and configurations for several of the impulse tests have been updated. Information has been included on general methods for test measurements.

Participants

At the time this standard was approved by the IEEE-SA Standards Board, the Low-Voltage Data, Communications, and Signaling Circuits Working Group (3.6.7) had the following members who contributed to writing this revision:

Michael Parente, *Chair*
William Curry, *Secretary*

Nisar Chaudhry
Chrysanthos Chrysanthou
Ernest J. Gallo
Phillip Jones
Wilhelm H. Kapp
Mark Lynnes
Albert R. Martin
Michael Maytum
Donald B. Turner
Dee Unterweger

Copyright © 2000 IEEE. All rights reserved.

Copyright The Institute of Electrical and Electronics Engineers, Inc.
Provided by IHS under license with IEEE
No reproduction or networking permitted without license from IHS
Not for Resale

The following members of the balloting committee voted on this standard:

Charles L. Ballentine
Rickard Bentinger
John S. Bonnesen
James Case
James F. Christensen
Bryan R. Cole
William Curry
James Funke
Ernest J. Gallo
Peter A. Goodwin
Willliam Greason
David W. Jackson
Wilhelm H. Kapp
Joseph L. Koepfinger
Gerald E. Lee
Carl E. Lindquist
William A. Maguire
Daleep C. Mohla
Hans-Wolfgang Oertel
Joseph C. Osterhout
Michael Parente
Carlos O. Peixoto
Percy E. Pool
Radhakrishna V. Rebbapragada
Alan W. Rebeck
Thomas J. Rozek
John A. Siemon
Mark S. Simon
Donald B. Turner
Steve G. Whisenant
Jonathan J. Woodworth
Donald M. Worden

When the IEEE-SA Standards Board approved this standard on 30 June 2000, it had the following membership:

Donald N. Heirman, *Chair*
James T. Carlo, *Vice Chair*
Judith Gorman, *Secretary*

Satish K. Aggarwal
Mark D. Bowman
Gary R. Engmann
Harold E. Epstein
H. Landis Floyd
Jay Forster*
Howard M. Frazier
Ruben D. Garzon
James H. Gurney
Richard J. Holleman
Lowell G. Johnson
Robert J. Kennelly
Joseph L. Koepfinger*
Peter H. Lips
L. Bruce McClung
Daleep C. Mohla
James W. Moore
Robert F. Munzner
Ronald C. Petersen
Gerald H. Peterson
John B. Posey
Gary S. Robinson
Akio Tojo
Donald W. Zipse

*Member Emeritus

Also included is the following nonvoting IEEE-SA Standards Board liaison:

Alan Cookson, *NIST Representative*
Donald R. Volzka, *TAB Representative*

Yvette Ho Sang
IEEE Standards Project Editor

Copyright © 2000 IEEE. All rights reserved.

Copyright The Institute of Electrical and Electronics Engineers, Inc.
Provided by IHS under license with IEEE
No reproduction or networking permitted without license from IHS
Not for Resale

Contents

1. Scope 1

2. References 2

3. Definitions 3

4. Service conditions 3

4.1 Normal service conditions 3
4.2 Unusual service conditions 4
4.3 Radiation 4

5. Basic configurations 4

6. Standard design test procedure 6

6.1 Standard design test criteria 6
6.2 Statistical procedures 6
6.3 Test conditions 6
6.4 Test measurements 6

7. Nonsurge performance tests 6

7.1 Rated voltage test 6
7.2 Rated current test 8
7.3 DC series resistance test 8
7.4 Standby current and insulation resistance test 10
7.5 Capacitance test 10
7.6 Inductance test 10
7.7 Insertion loss test 10
7.8 Phase shift test 11
7.9 Return-loss test 14
7.10 Longitudinal balance test 18
7.11 Pulse mask test 19
7.12 Rise- and decay-time test 19
7.13 Bit error rate (BER) test 21

8. Active performance tests 21

8.1 DC-limiting-voltage test 21
8.2 Impulse-limiting-voltage test 24
8.3 Transition current test 27
8.4 Current-response-time test 28
8.5 Impulse reset test 31
8.6 Current reset test 31
8.7 AC life test 34
8.8 Impulse life test 34
8.9 Maximum single-impulse discharge test 38
8.10 Trip endurance test 38
8.11 Blocking-cycle life test 38
8.12 Environmental cycling with impulse surges test 40

Copyright © 2000 IEEE. All rights reserved.

Copyright The Institute of Electrical and Electronics Engineers, Inc.
Provided by IHS under license with IEEE
No reproduction or networking permitted without license from IHS
Not for Resale

8.13 Environmental cycling with ac surges test 41
8.14 Multiport coupling test..... 42

9. Failure modes..... 45

Annex A (informative) Examples of internal arrangements of surge-limiting devices..... 46

Annex B (informative) Examples of terminal connections for multiport surge protectors 49

Annex C (informative) Test measurement techniques..... 51

Annex D (informative) Bibliography..... 54

Copyright © 2000 IEEE. All rights reserved.

Copyright The Institute of Electrical and Electronics Engineers, Inc.
Provided by IHS under license with IEEE
No reproduction or networking permitted without license from IHS
Not for Resale

IEEE Standard Test Methods for Surge Protectors Used in Low-Voltage Data, Communications, and Signaling Circuits

1. Scope

This standard applies to surge protectors for application on multiconductor balanced or unbalanced data, communications, and signaling circuits with voltages equal to or less than 1000 V rms, or 1200 V dc. These surge protectors are designed to limit voltage surges, current surges, or both.

This standard describes the methods of testing and criteria for determining the end of life of electrical surge protectors used in low-voltage data, communications, and signaling circuits. The surge protectors covered are multiple-component series or parallel combinations of linear or nonlinear elements, packaged for the purpose of limiting voltage, current, or both.

This standard is not intended to cover packaged single gas tube, air gap, varistor, or avalanche junction surge-protective devices, which are included in IEEE Std C62.31-1987,[1] IEEE Std C62.32-1981, IEEE Std C62.33-1982, and IEEE Std C62.35-1987, respectively. Specifically excluded from this standard are test methods for low-voltage power circuit applications. For protection of wire-line communication facilities under the specialized conditions found at power stations, consult IEEE Std 487-1992.

The tests in this standard are intended as design tests, as defined in the IEEE Dictionary [B1][2], and provide a means of comparison among various multiple-component surge protectors.

The test criteria and definitions of this standard provide a common engineering language beneficial to users and manufacturers of multiple-component surge protectors.

[1]Information on references can be found in Clause 2.

[2]The numbers in brackets correspond to those in the bibliography in Annex D.

Copyright © 2000 IEEE. All rights reserved.

Copyright The Institute of Electrical and Electronics Engineers, Inc.
Provided by IHS under license with IEEE
No reproduction or networking permitted without license from IHS
Not for Resale

CAUTION

Because of the voltage and energy levels employed in the majority of tests described herein, all tests should be considered hazardous. Appropriate caution should be taken in their performance.

2. References

This standard shall be used in conjunction with the following publications. If the following publications are superseded by an approved revision, the revision shall apply.

IEEE Std 455-1985 (Reaff 1992), IEEE Standard Test Procedure for Measuring Longitudinal Balance of Telephone Equipment Operating in the Voice Band.[3]

IEEE Std 487-1992, IEEE Recommended Practice for the Protection of Wire-Line Communication Facilities Serving Electric Power Stations.

IEEE Std 743-1995, IEEE Standard Equipment Requirements and Measurement Techniques for Analog Transmission Parameters for Telecommunications.

IEEE Std C62.1-1989 (Reaff 1994), IEEE Standard for Gapped Silicon-Carbide Surge Arresters for AC Power Circuits.

IEEE Std C62.31-1987 (Reaff 1998), IEEE Standard Test Specifications for Gas-Tube Surge-Protective Devices.

IEEE Std C62.32-1981 (Reaff 1997), IEEE Standard Test Specifications for Low-Voltage Air Gap Surge-Protective Devices.

IEEE Std C62.33-1982 (Reaff 1994), IEEE Standard Test Specifications for Varistor Surge-Protective Devices.

IEEE Std C62.35-1987 (Reaff 2000), IEEE Standard Test Specifications for Avalanche Junction Semiconductor Surge Protective Devices.

IEEE Std C62.41-1991(Reaff 1995), IEEE Recommended Practice on Surge Voltages in Low-Voltage AC Power Circuits

IEEE Std C62.45-1992 (Reaff 1997), IEEE Guide on Surge Testing for Equipment Connected to Low-Voltage AC Power Circuits.

ITU-T Recommendation G.703 (1998), Physical/electrical characteristics of hierarchical digital interfaces.[4]

[3]IEEE publications are available from the Institute of Electrical and Electronics Engineers, 445 Hoes Lane, P.O. Box 1331, Piscataway, NJ 08855-1331, USA (http://standards.ieee.org/).

[4]ITU-T publications are available from the International Telecommunications Union, Place des Nations, CH-1211, Geneva 20, Switzerland/Suisse (http://www.itu.int/).

Copyright © 2000 IEEE. All rights reserved.

Copyright The Institute of Electrical and Electronics Engineers, Inc.
Provided by IHS under license with IEEE
No reproduction or networking permitted without license from IHS Not for Resale

3. Definitions

This clause contains only those definitions of terms relating to surge protectors, occurring within this standard, that are not given in the IEEE Dictionary [B1].

3.1 blocking voltage: The maximum voltage that can be applied to current-limiting pairs of terminals of a surge protector containing one or more current-protective devices without degradation of the surge protector.

3.2 multiport surge protector: A surge protector that provides surge protective function to two or more circuits, such as, but not limited to, paired conductors, coaxial cables, or mains, whereby all conductors connected to the protected circuits are routed through a common enclosure having a shared common terminal.

3.3 protector: *See:* **surge protector.**

3.4 surge protector: An assembly of protective devices consisting of one or more series, parallel, or any combination of elements used to limit surge voltages, currents, or both to a specified level. *Syn:* **protector**.

3.5 transition current: The current required at a given temperature and duration to cause a current-protective device to change state.

4. Service conditions

4.1 Normal service conditions

In the absence of special requirements, the following items should be specified as appropriate.

4.1.1 Environmental conditions

a) Operating and storage temperature ranges
b) Humidity
c) Mechanical shock and vibration
d) Atmospheric pressure range

4.1.2 Physical properties

a) Solvent resistance
b) Solderability
c) Flammability
d) Package rupture during overload
e) Electrical connection to metallic case

4.1.3 System conditions

a) Nominal system frequencies
b) Maximum continuous system voltage
c) Peak impulse currents
d) Transient repetition rate

Copyright © 2000 IEEE. All rights reserved.

Copyright The Institute of Electrical and Electronics Engineers, Inc.
Provided by IHS under license with IEEE
No reproduction or networking permitted without license from IHS
Not for Resale

4.1.4 Surge rating of the surge protector under system conditions

a) Rated average power dissipation
b) Peak pulse power or current temperature derating
c) Lifetime rated pulse currents

4.2 Unusual service conditions

The following service conditions may require special consideration in the design or application of surge protectors and should be called to the attention of the manufacturer.

4.2.1 Environmental conditions

a) Ambient temperature exceeding the normal service conditions
b) Exposure to
    1) Damaging fumes or vapors
    2) Excessive dirt or current-conducting deposits, excessive humidity, moisture, dripping water, steam or salt spray, explosive atmospheres, abnormal vibrations, and shocks
c) Unusual transportation or storage conditions
d) Flammability rating

4.2.2 Physical conditions

Limitation on weight or space, including clearance to nearby conducting objects.

4.2.3 System conditions

a) System voltages, currents, repetition rates, or frequency operating conditions whereby the ratings of the devices are exceeded (see Clause 9)
b) System impulse currents exceeding the rating of the device (see Clause 9)
c) Exposure to direct lightning strike (see Clause 9)
d) Electromagnetic field effects (see Clause 9)
e) Unusual ground potential situations (see Clause 9)
f) Any other unusual conditions known to the user

4.3 Radiation

Some protectors may contain radioactive material. Manufacturers of such protectors shall mark them in accordance with applicable regulations.

5. Basic configurations

This clause illustrates, by functional block diagrams, the surge protectors described by this standard. A protector assembly may be composed of any number of the protectors in Figure 1.

Copyright © 2000 IEEE. All rights reserved.
Copyright The Institute of Electrical and Electronics Engineers, Inc.
Provided by IHS under license with IEEE
No reproduction or networking permitted without license from IHS
Not for Resale

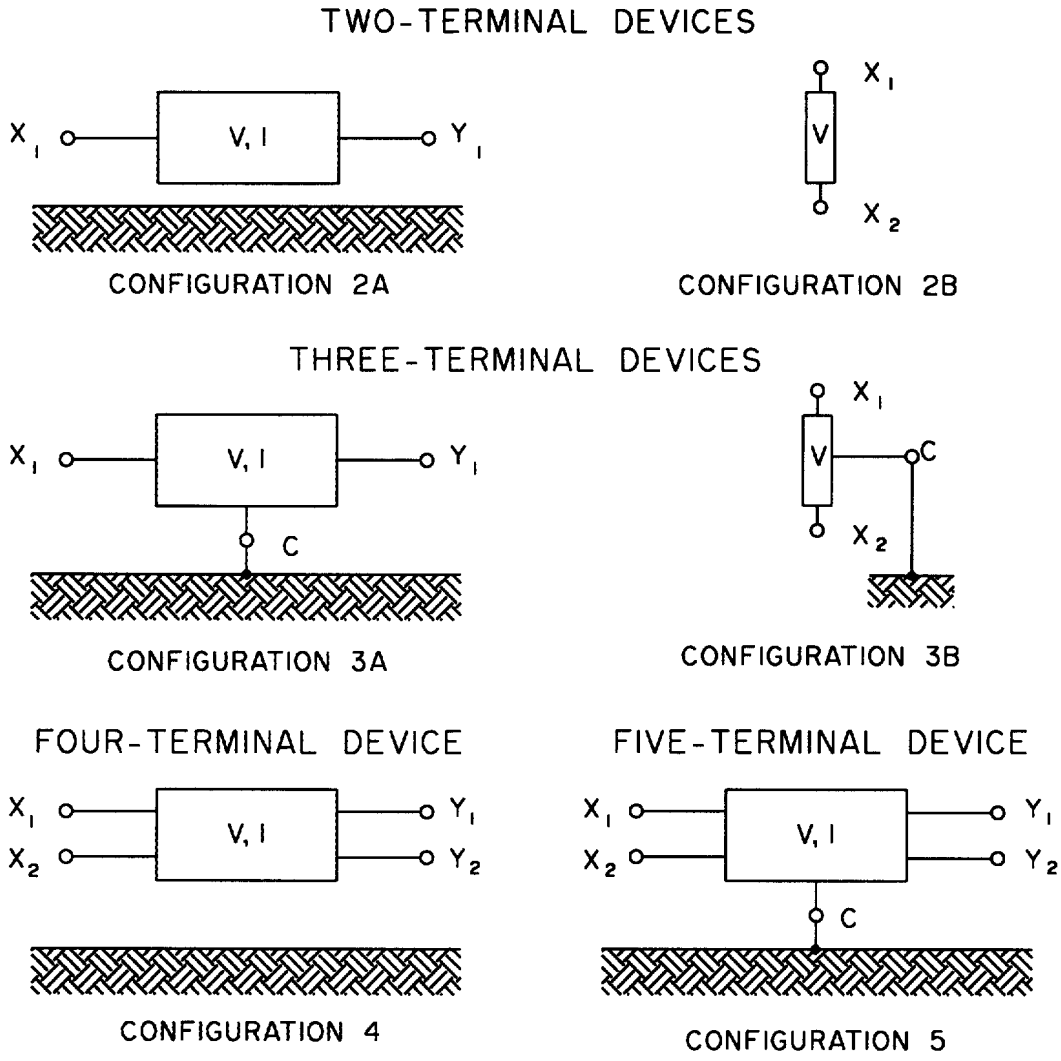

C	=	common terminal
I	=	current-limiting function
V	=	voltage-limiting function
X_1, X_2, Y_1, Y_2	=	signal terminals

NOTES

1—The V,I designation in Figure 1 indicates that a surge protector may have a voltage-limiting function, a current-limiting function, or both.

2—Surge protectors intended for coaxial cable circuits shall be tested, as described in Clause 7 and Clause 8, using Configuration 3A. Outer conductors of the transmission lines are connected to the common terminal of the surge protector during the tests. (See examples of surge protectors on coaxial lines in Figure A.2.)

3—Surge protectors intended for twinaxial cable circuits shall be tested, as described in Clause 7 and Clause 8, using Configuration 5. Outer conductors of the transmission lines are connected to the common terminal of the surge protector during the tests. (See examples of surge protectors on twinaxial lines in Figure A.3.)

Figure 1—Basic configurations

Copyright © 2000 IEEE. All rights reserved.

Copyright The Institute of Electrical and Electronics Engineers, Inc.
Provided by IHS under license with IEEE
No reproduction or networking permitted without license from IHS
Not for Resale

6. Standard design test procedure

6.1 Standard design test criteria

The design tests described in Clause 7 and Clause 8 provide standardized methods for making single observations of a specified characteristic of a surge protector. These properties may vary from device to device, making it necessary to provide statistical descriptions of the property in order to compare products.

6.2 Statistical procedures

The following procedure shall be used to describe any characteristic that has been determined to have important statistical aspects. A product sample shall be chosen in a manner consistent with the definition of design tests as provided by the IEEE Dictionary [B1]. A sufficient number of devices shall be tested and the characteristic or rating in question measured as described in the applicable design test until the parameters of the underlying statistical distribution are determined within specified confidence limits. Values relating to the product sample, such as, but not limited to, mean, median, maximum, minimum, and standard deviation, may then be stated.

6.3 Test conditions

The tests in Clause 7 and Clause 8 shall be performed on the surge protector as required by the application. Unless otherwise specified, ambient test conditions shall be as follows:

Temperature:	25 °C ± 5 °C
Relative humidity:	less than 85%
Atmospheric pressure:	60–78 cm of Hg

For temperatures other than 25 °C, the surge protector, mounted as intended to be used, shall be maintained at the specified test temperature but with the air flow controlled to provide a free convection heat transfer, unless otherwise specified. The protector temperature shall be allowed to stabilize before tests are performed.

6.4 Test measurements

General guidance on test measurement techniques that has been useful in measuring the characteristics of surge protectors is contained in Annex C.

7. Nonsurge performance tests

The following nonsurge voltage and current tests are intended to establish that, in its quiescent state, the surge protector does not disturb operation of the protected circuit.

7.1 Rated voltage test

The purpose of this test is to verify that the surge protector can be used continuously at a specified maximum voltage, frequency, and temperature without undesirable signal distortion, undesirable power loss, or failure.

Copyright © 2000 IEEE. All rights reserved.
Copyright The Institute of Electrical and Electronics Engineers, Inc.
Provided by IHS under license with IEEE
No reproduction or networking permitted without license from IHS
Not for Resale

7.1.1

The surge protector shall be tested under one or any combination of the following conditions, using test circuits functionally equivalent to those shown in Figure 2:

a) At specified voltage *e* and frequency. The voltage shall be stated as rms, ac peak, or dc.
b) At specified maximum and minimum ambient temperatures. The protector with voltage applied shall be allowed to stabilize for 24 h at the ambient temperatures before the measurements are made.
c) Unless otherwise specified, no load shall be connected to the protector terminals.

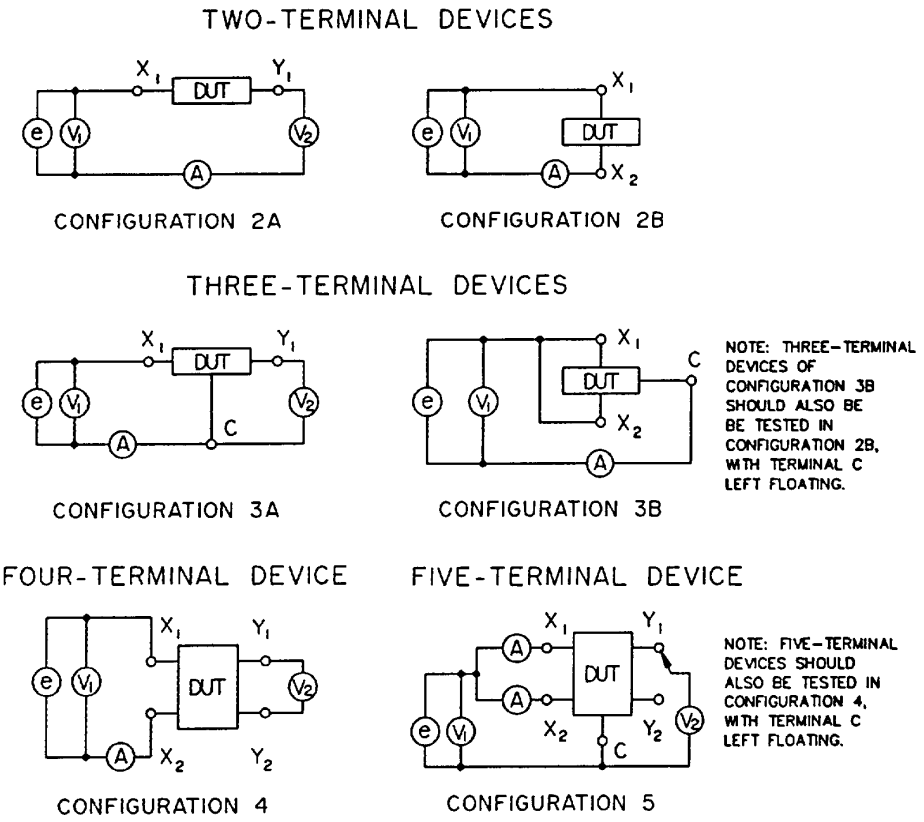

A	=	ammeter, for reading current *A*
C	=	common terminal
DUT	=	device under test
e	=	source voltage, for providing voltage level *e*
V_1, V_2	=	suitable voltage-measuring instruments, e.g., oscilloscopes, for measuring voltages V_1 and V_2
X_1, X_2, Y_1, Y_2	=	signal terminals

Figure 2—Test circuits for the rated voltage test (configurations refer to Figure 1)

Copyright © 2000 IEEE. All rights reserved.

Copyright The Institute of Electrical and Electronics Engineers, Inc.
Provided by IHS under license with IEEE
No reproduction or networking permitted without license from IHS
Not for Resale

7.1.2

Observe the amplitudes and waveshapes of voltage V_1 and voltage V_2. Measure the current by means of a suitable ammeter, A, or by a current shunt and an oscilloscope. When making voltage measurements, the ammeters shall be removed from the circuit. When making current measurements, the voltage-measuring instruments shall be removed from the circuit.

7.1.3

After the temperature stabilization period, the surge protector shall not exhibit specified failure modes (see Clause 9) and shall meet the following criteria:

a) The protector shall not limit nor distort voltages V_1 or V_2 beyond a specified amount.
b) The current, *A*, shall not exceed a specified value at the ambient temperature of the test. (This current may be referred to as leakage current.)

7.2 Rated current test

This test is conducted to verify that a surge protector does not degrade normal circuit functions while carrying the rated current.

7.2.1

The surge protector is to be tested under the following conditions, using the appropriate test circuit, as shown in Figure 3:

a) At rated frequency, dc, or as specified.
b) Maximum ambient temperature of the application, or as specified.
c) A continuous current, *I*, specified by its dc, ac rms, or ac peak value (+5%, –0%), is to be adjusted by means of the source resistance, R_s, with the protector in the circuit.
d) The test shall be conducted until temperature stabilization of the protector occurs.
e) The voltages *e*, e_1, and e_2 shall be the rated voltage(s). Normally $e_1 = e_2$, except where opposite polarity is an important requirement.
f) R_L shall approximate the load resistance of the intended application.
g) For ungrounded circuit applications, the circuits in Configuration 2A, Configuration 4 (balanced), and Configuration 4 (unbalanced) of Figure 3 shall be used.
h) For multicircuit devices, as many circuits as are expected to be active at the same time shall be simultaneously exposed to the rated current.

7.2.2

At the conclusion of the test, the surge protector shall not experience a failure mode relevant to the application (see Clause 9). The voltage across R_L shall not have more than a specified increase in total harmonic distortion as compared to the value measured with the protector replaced by a short circuit. In the absence of specified requirements, the increase shall not exceed 1%.

7.3 DC series resistance test

This test is conducted to determine the dc series resistance between specified terminals of a surge protector.

--`,,`-`-`,,`,,`,`,,`---
Copyright © 2000 IEEE. All rights reserved.
Copyright The Institute of Electrical and Electronics Engineers, Inc.
Provided by IHS under license with IEEE
No reproduction or networking permitted without license from IHS
Not for Resale

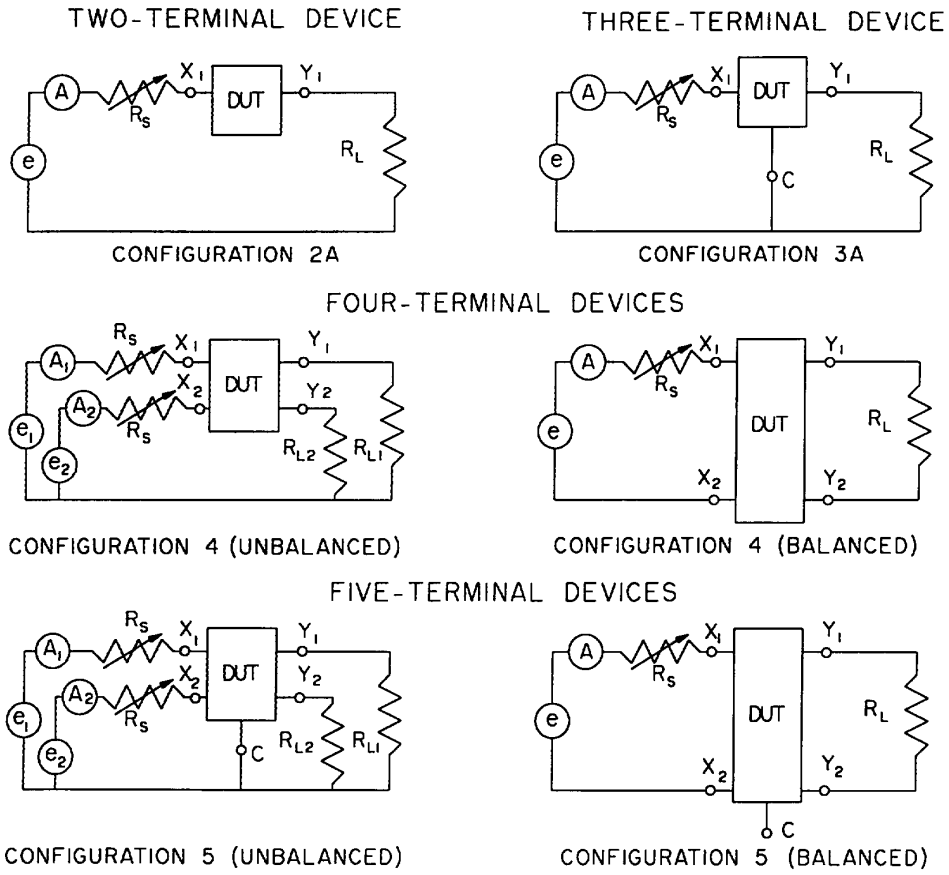

A, A_1, A_2	=	ammeters or oscilloscopes with current shunts, for reading current *A*
C	=	common terminal
DUT	=	device under test
e, e_1, e_2	=	dc or sinewave sources with less than 1% total harmonic distortion, for providing voltage level *e*
R_L, R_{L1}, R_{L2}, R_S, R_{S1}, R_{S2}	=	noninductive resistors
X_1, X_2, Y_1, Y_2	=	signal terminals

Figure 3—Test circuits for the rated current test

7.3.1

The resistance between specified terminals shall be determined. One pair of terminals shall be measured at a time; all terminals not involved in the measurement shall be left open-circuited. The test current and polarity shall be specified; the current shall be less than or equal to the rated current. The voltage across the tested terminals shall be measured.

The dc series resistance is the measured voltage divided by the test current.

Copyright © 2000 IEEE. All rights reserved.

Copyright The Institute of Electrical and Electronics Engineers, Inc.
Provided by IHS under license with IEEE
No reproduction or networking permitted without license from IHS
Not for Resale

7.4 Standby current and insulation resistance test

This test is conducted to determine the dc standby current and insulation resistance between specified terminals of a surge protector.

One pair of terminals shall be measured at a time; all terminals not involved in the measurement shall be left open-circuited. The test voltage, polarity, and temperature shall be specified; the voltage shall be less than or equal to the rated voltage. The current conducted by the tested terminals shall be measured. The current shall be measured after the voltage has been applied for at least 100 ms, unless it is known that the protector does not contain a gap-type device, in which case the current may be measured after 10 ms.

The measured current is the standby current (also known as the leakage current). The insulation resistance is the test voltage divided by the measured current.

NOTE—Insulation resistance to external surfaces of the surge protector may be measured by such methods as surrounding the external surface with a conducting material and considering that material as a test terminal.

7.5 Capacitance test

This test is conducted to determine the capacitance between specified terminals of a surge protector.

The capacitance between specified terminals shall be measured at a specified sinusoidal frequency and bias voltage. One pair of terminals shall be measured at a time; all terminals not involved in the test shall be connected to a ground plane in the measuring instrument. In the absence of specified requirements, a signal of 1 V or less at a frequency of 1 MHz and a bias of 0 V dc are suggested.

7.6 Inductance test

This test is conducted to determine the inductance between specified terminals of a surge protector.

The inductance between specified terminals shall be measured at a specified sinusoidal frequency and bias current. One pair of terminals shall be measured at a time; all terminals not involved in the measurement shall be left open-circuited. In the absence of specified requirements, a frequency of 1 MHz and a bias current of 0 A are suggested.

7.7 Insertion loss test

This test is conducted to determine the loss of transmitted power at a specified frequency, or frequency range, caused by the insertion of a surge protector into a communication circuit in which the impedances of the signal source, transmission line, and load are matched.

7.7.1 General considerations

The configuration of the surge protector depends, in part, on the type of communication equipment and transmission lines it is used to protect. This, in turn, determines the type of test equipment necessary to perform the insertion loss test. In general, there are analog or digital signals, unbalanced and balanced communication circuits, twisted wire pair or coaxial transmission lines, and wire terminals or coaxial connectors.

The surge protector shall be tested at the specified ambient temperature (see 6.3).

Copyright © 2000 IEEE. All rights reserved.

Copyright The Institute of Electrical and Electronics Engineers, Inc.
Provided by IHS under license with IEEE
No reproduction or networking permitted without license from IHS
Not for Resale

If a surge protector has more than two ports, and the test equipment does not supply terminating provisions for the additional ports, then the test shall be performed with the untested ports terminated with the characteristic impedance of the circuit.

If specified, a bias voltage or current (not shown in Figure 4) shall be applied to the surge protector.

7.7.2 Measurement at frequencies below 1 MHz

For measurement of insertion loss for surge protectors used in low-frequency circuits (below 1 MHz), where the matched impedances of the source, transmission line, and load are not critical, a signal generator (analog or digital) and an oscilloscope may be used.

Set up the test circuit as shown in part (a) of Figure 4. Adjust the voltage level, V_0, and the frequency of the signal source as specified. Insert the surge protector between the signal source and the load. Measure the voltage, V_2, as shown in part (b) of Figure 4.

The insertion loss (in decibels) is determined by Equation (1).

$$\text{Insertion loss} = 20 \log (V_2/V_0) \quad (1)$$

7.7.3 Measurement at frequencies above 1 MHz

There is a wide choice of test equipment available to perform insertion loss tests. An example is a spectrum analyzer with a tracking generator. The test equipment chosen shall be suitable for the same type of communication system (i.e., analog or digital signals, balanced or unbalanced, twisted pair wire connections or coaxial connectors), and have the same characteristic impedance, as the circuit for which the surge protector is designed.

The test equipment is calibrated and operated in accordance with the manufacturer's instructions and, usually, the cables and connectors needed to insert the surge protector are connected, and their losses are nulled from the subsequent measurement of the insertion loss of the surge protector. The surge protector is inserted, and the instrument displays the insertion loss in decibels caused by the surge protector.

If the available test equipment does not provide the proper terminations required by the surge protector, then adapters, such as connectors or transformers, shall be used. It is important that these adapters have the same characteristic impedance as the rest of the circuit, and that the losses caused by the adapters are excluded (nulled) from the insertion loss measurement of the surge protector.

7.8 Phase shift test

This test is conducted to determine the phase shift of a sinusoidal voltage signal of specified frequency, or frequency range, caused by the insertion of a surge protector into the signal path.

Set up the test circuit as shown in Figure 5. Adjust the voltage level V_1 and the frequency as specified. The surge protector shall be at the specified ambient temperature (see 6.3). Measure the time delay between the two voltage waveshapes as they pass through the 0 V reference line.

NOTE—A specified bias voltage or current (not shown in Figure 5) may be applied to the surge protector.

Copyright © 2000 IEEE. All rights reserved.

Copyright The Institute of Electrical and Electronics Engineers, Inc.
Provided by IHS under license with IEEE
No reproduction or networking permitted without license from IHS
Not for Resale

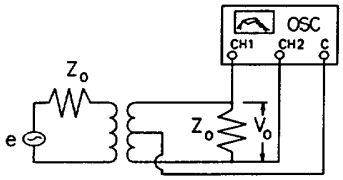

(a)—Test circuit before insertion of surge protector

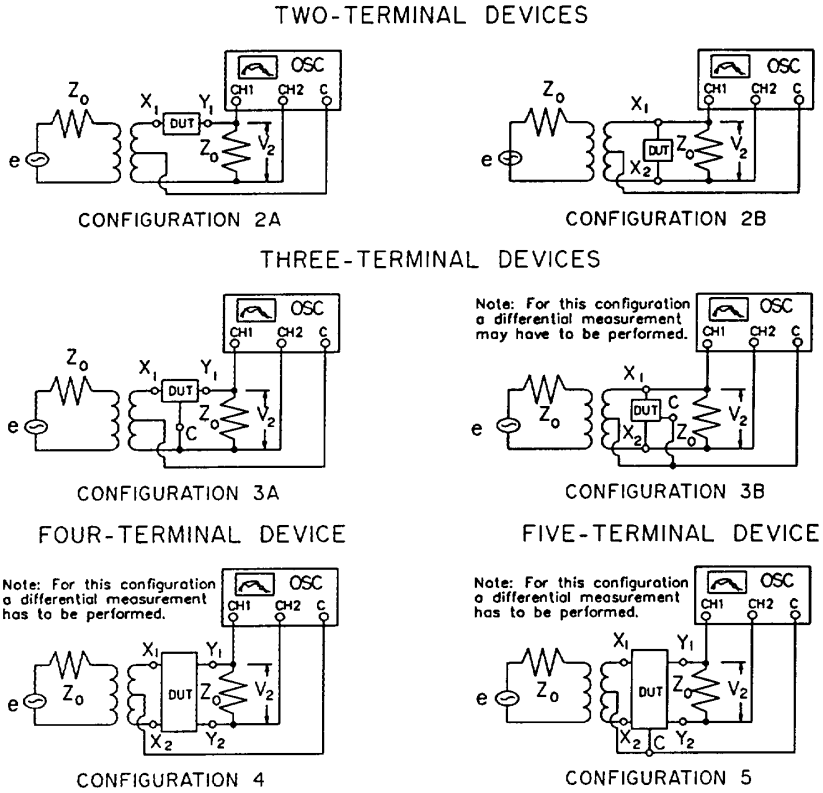

(b)—Test circuits after insertion of surge protector

C = common terminal
CH_1, CH_2 = oscilloscope channels 1 and 2
DP = differential measuring probe
DUT = device under test
e = signal source, for providing voltage level *e*
OSC = oscilloscope
V_1 = input voltage
V_2 = output voltage
X_1, X_2, Y_1, Y_2 = signal terminals
Z_0 = terminating and source resistor matching the characteristic impedance of the system

NOTES

1—Configuration 5, as shown in Figure 1, can be tested in the same manner as Configuration 4, but with the common terminal (C) connected to the common terminal of the transformer.
2—This test does not apply to Configurations 2B and 3B, since they do not cause voltage phase shifts.

Figure 4—Test circuits for the insertion loss test

Copyright © 2000 IEEE. All rights reserved.
Copyright The Institute of Electrical and Electronics Engineers, Inc.
Provided by IHS under license with IEEE
No reproduction or networking permitted without license from IHS
Not for Resale

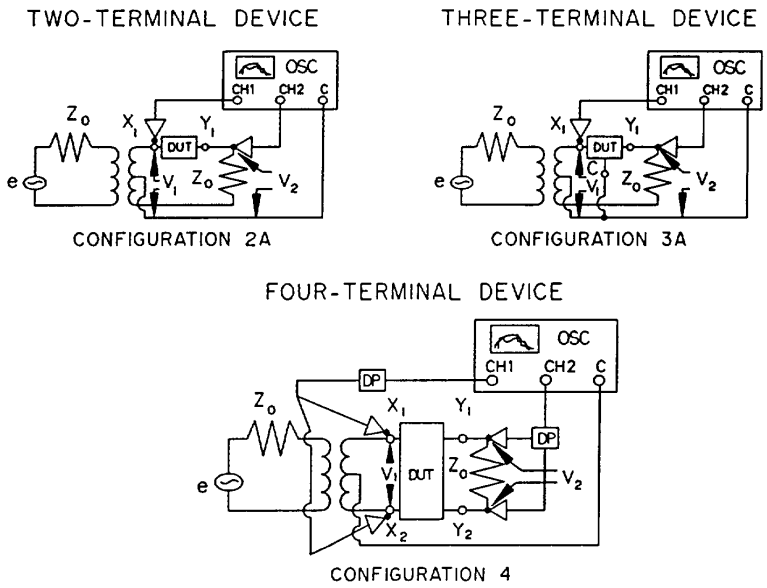

C = common terminal
CH_1, CH_2 = oscilloscope channels 1 and 2
DP = differential measuring probe
DUT = device under test
e = signal source, for providing voltage level *e*
OSC = oscilloscope
V_1 = input voltage
V_2 = output voltage
X_1, X_2, Y_1, Y_2 = signal terminals
Z_0 = terminating and source resistor matching the characteristic impedance of the system

NOTES

1—Configuration 5, as shown in figure 1, can be tested in the same manner as Configuration 4, but with the common terminal (C) connected to the common terminal of the transformer.
2—This test does not apply to Configurations 2B and 3B, since they do not cause voltage phase shifts.

Figure 5—Test circuits for the phase shift test

Copyright © 2000 IEEE. All rights reserved.

Copyright The Institute of Electrical and Electronics Engineers, Inc.
Provided by IHS under license with IEEE
No reproduction or networking permitted without license from IHS
Not for Resale

The phase shift is determined by converting the time difference into degrees or radians using Equation (2) or Equation (3).

$$\text{phase shift (degrees)} = \frac{t}{T} \times 360 \tag{2}$$

$$\text{phase shift (radians)} = \frac{t}{T} \times 2\pi \tag{3}$$

where

t is time difference between voltage signals (in seconds),
T is period of a full cycle of V_1 (in seconds).

7.9 Return-loss test

This test is conducted to determine the amount of power reflected to the signal source over a specified frequency range caused by insertion of the surge protector into a matched transmission line. Return loss is measured at a pair of terminals, designated as a port. Terminal pairs generally used for return-loss measurements are (Figure 1): X_1–C, X_2–C, Y_1–C, Y_2–C, X_1–X_2, and Y_1–Y_2.

The surge protector shall be at the specified ambient temperature (see 6.3).

7.9.1 Measurement at frequencies below 1 MHz

Set up the test circuit as shown in part (a) of Figure 6. Adjust the tracking generator voltage and the frequency range as specified, and determine the reference return loss of the circuit without the surge protector by connecting a short circuit to the return-loss bridge so that all incident power is reflected. Record the level displayed (in decibels) by the spectrum analyzer. Then insert the surge protector as shown in part (b) of Figure 6.

If specified, a bias voltage or current (not shown in Figure 6) shall be applied to the surge protector. Additional considerations for the measurement of return loss on analog voice frequency circuits are found in IEEE Std 743-1995.

7.9.2 Measurement at frequencies above 1 MHz

At frequencies above 1 MHz, improved accuracy results either from measuring the scattering parameters of the surge protector, or from the use of a spectrum analyzer with a tracking generator and a directional coupler (sometimes called a return-loss bridge).

Test equipment for return-loss measurements generally includes coaxial connectors. If the surge protector being tested does not have coaxial connectors, an adapter (possibly including a transformer, if the surge protector is of balanced construction) shall be used. If an adapter is used, care shall be taken that the return loss of the adapter does not dominate the return loss of the surge protector. An adapter is inserted between the test system and the surge protector as shown in Figure 7.

If the surge protector has more than two ports, then terminate all unused ports in a load having an impedance equal to the characteristic impedance of the port.

Copyright © 2000 IEEE. All rights reserved.
Copyright The Institute of Electrical and Electronics Engineers, Inc.
Provided by IHS under license with IEEE
No reproduction or networking permitted without license from IHS
Not for Resale

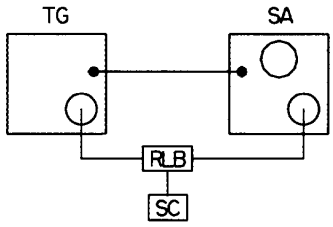

(a) Circuit without surge protector

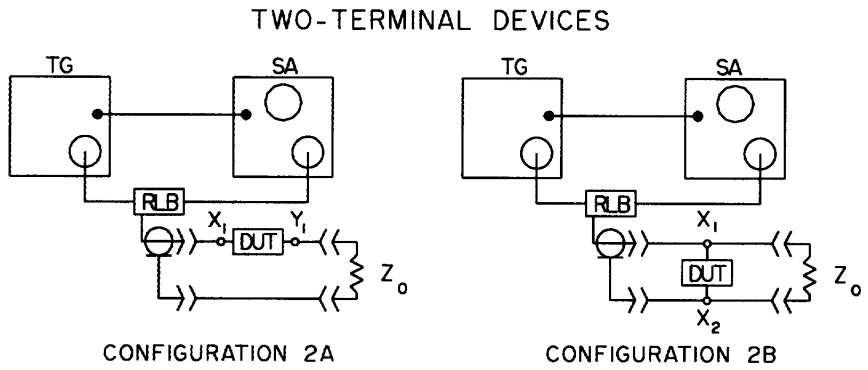

(b) Circuit with surge protector

C = common terminal
DUT = device under test
RLB = return-loss bridge
SA = spectrum analyzer
SC =characteristic short-circuit termination
TG = tracking generator
X_1, X_2, Y_1 = signal terminals
Z_0 = terminating resistor matching the characteristic impedance of the system

Figure 6—Test circuit for the return-loss test

Copyright © 2000 IEEE. All rights reserved.

Copyright The Institute of Electrical and Electronics Engineers, Inc.
Provided by IHS under license with IEEE
No reproduction or networking permitted without license from IHS
Not for Resale

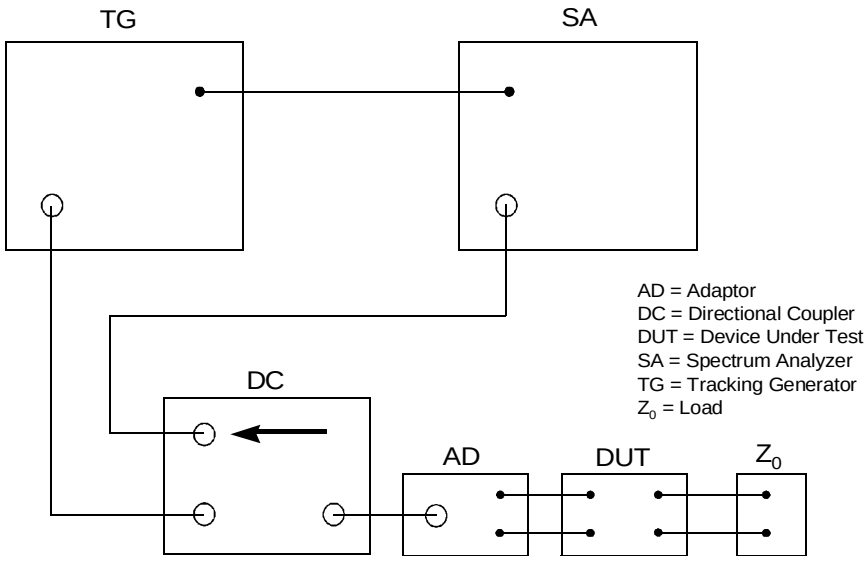

NOTE—The arrow in the box marked "DC" shows the direction of the sampled power.

Figure 7—Circuit for measuring return loss of a surge protector needing an adaptor

7.9.2.1 Method A—scattering parameters

This method requires a network analyzer and a companion S-parameter measuring set. The measuring set shall have the same characteristic impedance as the network into which the surge protector will be installed. The measuring set is calibrated and operated according to the manufacturer's instructions. The surge protector under test is connected to the measuring set in the manner described by the manufacturer of the measuring set.

Under these conditions, the return loss of the surge protector is shown in Equation (4).

$$\text{Return loss} = -20 \log_{10} (s_{11}) \quad (4)$$

where s_{11} is the fraction of voltage reflected back from the tested port, with all other ports terminated in the characteristic impedance of the circuit.

7.9.2.2 Method B—spectrum analyzer

This method uses a spectrum analyzer with a tracking generator and a directional coupler (return-loss bridge) having the same characteristic impedance as the network into which the surge protector will be installed. The spectrum analyzer and tracking generator are calibrated and operated according to the manufacturer's instructions.

Copyright © 2000 IEEE. All rights reserved.
Copyright The Institute of Electrical and Electronics Engineers, Inc.
Provided by IHS under license with IEEE
No reproduction or networking permitted without license from IHS
Not for Resale

Figure 8 shows the setup for calibration of the measuring system comprising the spectrum analyzer, tracking generator, and directional coupler. At each frequency where the return loss is to be measured, the system is calibrated by measuring the voltage output of the directional coupler with a short circuit (voltage output = V_s), open circuit (voltage output = V_o), and matched load (voltage output = V_m). At each frequency, a set of calibration coefficients, a_x, is then calculated from Equation (5), Equation (6), and Equation (7), or from a regression fit to the calibration voltage measurements.

$$1 = a_0 + a_1 V_s + a_2 V_s^2 \tag{5}$$

$$0 = a_0 + a_1 V_m + a_2 V_m^2 \tag{6}$$

$$-1 = a_0 + a_1 V_o + a_2 V_o^2 \tag{7}$$

The surge protector under test is then connected to the measuring system using the setup shown in Figure 9, if the surge protector has coaxial connectors, or in Figure 7, if an adapter is required. The return-loss voltage, V, is read at each specified frequency, and the return loss at each frequency is calculated from Equation (8).

$$\text{Return loss} = -20 \log_{10} (a_0 + a_1 V + a_2 V^2) \tag{8}$$

where the a_x coefficients are determined as in Equation (5), Equation (6), or Equation (7).

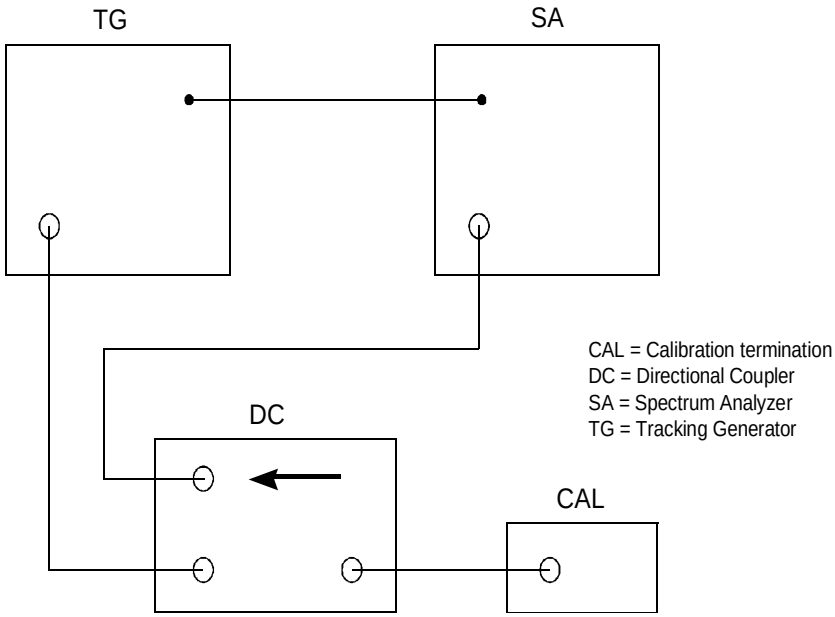

NOTE—The arrow in the box marked “DC” shows the direction of the sampled power.

Figure 8—Circuit for calibration

Copyright © 2000 IEEE. All rights reserved.

Copyright The Institute of Electrical and Electronics Engineers, Inc.
Provided by IHS under license with IEEE
No reproduction or networking permitted without license from IHS
Not for Resale

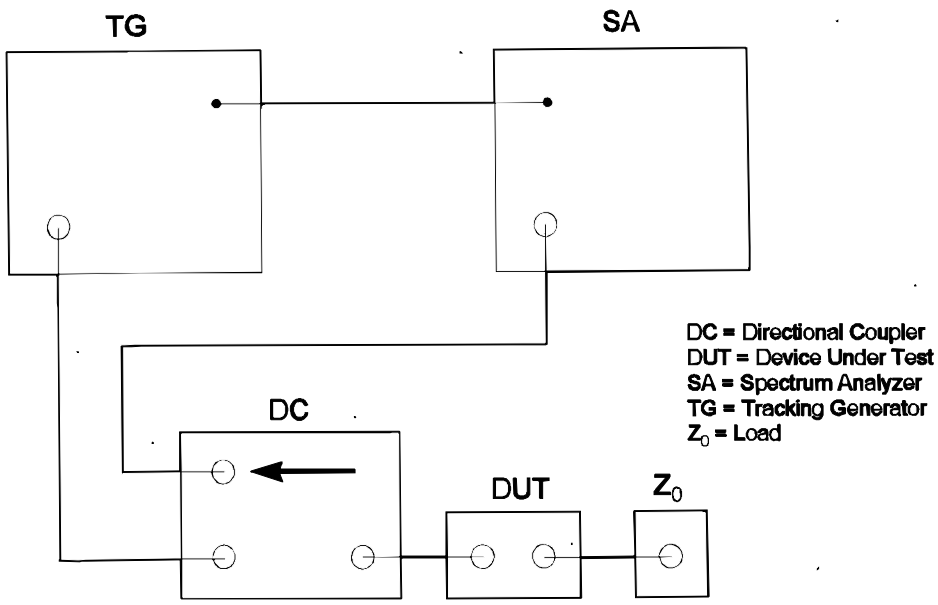

NOTE—The arrow in the box marked "DC" shows the direction of the sampled power.

Figure 9—Circuit for measuring return loss of a surge protector having coaxial connectors

7.10 Longitudinal balance test

This test is conducted to verify that a surge protector does not unacceptably contribute to the noise of the circuit to which it is applied. The longitudinal balance test is intended for protectors used on balanced paired-conductor circuits, such as telephone-type circuits.

7.10.1

Longitudinal balance is a measurement of the degree of symmetry of the impedances to ground (or common terminal) of the two sides of a network or circuit. It is also used to express the degree of susceptibility to longitudinal (common mode) interference. The degree of balance is determined by applying a longitudinal current (i.e., a current that travels in the same direction on both conductors of the pair) to the network or circuit under test, and then measuring the resulting metallic (transverse or differential mode) voltage or noise across the pair.

7.10.2

Balance measurements shall be made at the nominal circuit operational voltages, currents, and frequencies appropriate to the expected applications for the circuit being tested. The nominal circuit operational conditions, and the longitudinal voltage of the source used for the test, shall be specified.

Connections shown in Figure 4 of IEEE Std 455-1985 shall be used for testing three-terminal surge-protector configurations, and those shown in part (a) of Figure 5 of the same standard shall be used for testing four- and five-terminal surge protector configurations.

Copyright © 2000 IEEE. All rights reserved.
Copyright The Institute of Electrical and Electronics Engineers, Inc.
Provided by IHS under license with IEEE
No reproduction or networking permitted without license from IHS
Not for Resale

7.10.3

The longitudinal balance is the ratio of the longitudinal voltage, V_s, and the resulting metallic voltage, V_m, of the surge protector under test expressed in decibels, as shown in Equation (9).

$$\text{Longitudinal balance (dB)} = 20 \log (V_s/V_m) \quad (9)$$

where V_s and V_m have the same frequency.

NOTE—To ensure that high levels of longitudinal noise voltage in certain applications do not cause loss of balance because of surge protector nonlinearities, the test shall be repeated with the source voltage of the test adjusted to the level of the longitudinal noise voltage. Verify that there are no significant changes in results.

7.11 Pulse mask test

This test is conducted to verify that a surge protector in a digital circuit does not cause unacceptable distortion of the digital information signal.

7.11.1

The surge protector shall be tested in a circuit that is similar to that used for insertion loss (see 7.7). The source shall provide a digital data signal, with a bit rate selected from ITU-T Recommendation G.703 (1998), using the applicable line code as specified in ITU-T Recommendation G.703 (1998). The impedance of the source and resistive load shall be as specified in ITU-T Recommendation G.703 (1998) for the selected digital data signal. The pulse mask test shall be performed first across the load without the surge protector. Then, the test shall be repeated with the surge protector in place.

7.11.2

An isolated pulse of the selected digital data signal shall fit within its corresponding pulse mask, as specified in ITU-T Recommendation G.703 (1998), with or without the presence of the surge protector.

7.12 Rise- and decay-time test

This test is conducted to measure the change, if any, in the slope of the operating-voltage pattern caused by insertion of the surge protector.

7.12.1

Rise and decay times shall be measured separately in the send and receive circuits. The rise and decay times of the send circuit shall be measured into a load impedance at the specific rate(s) and voltage levels, with the unspecified terminals unconnected (see Figure 10). The output impedance of the BER tester or square wave generator and the load impedance, Z_0, shall be set to be equal to the characteristic impedance of the application. Reconnect the test circuit, substituting the receive circuit for the send circuit, and repeat the procedure.

a) Measure the time to rise from 10% to 90% of the peak-to-peak operating voltage across the characteristic impedance with and without the surge protector installed.
b) Measure the time to decay from 90% to 10% of the peak-to-peak operating voltage across the characteristic impedance with and without the surge protector installed.
c) Repeat procedures a) and b) for the receive circuit.

Copyright © 2000 IEEE. All rights reserved.

Copyright The Institute of Electrical and Electronics Engineers, Inc.
Provided by IHS under license with IEEE
No reproduction or networking permitted without license from IHS
Not for Resale

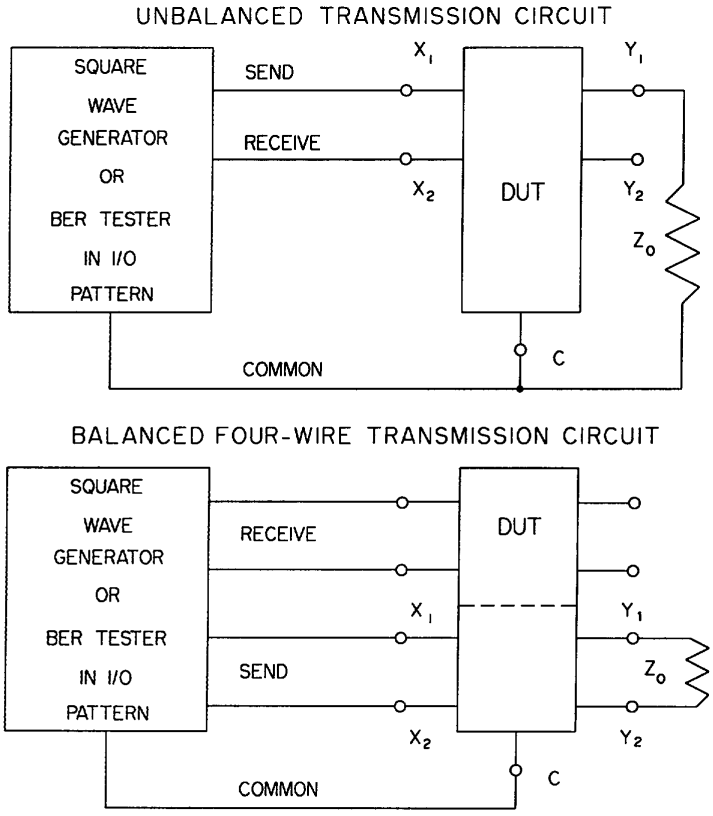

BER = bit error rate
C = common terminal
DUT = device under test
Z_0 = load impedance matching the characteristic impedance of the application
X_1, X_2, Y_1, Y_2 = signal terminals

Figure 10—Test circuits for the digital insertion loss test and the rise- and decay-time test

7.12.2

The test criteria for determining rise and decay time is shown in Equation (10) and Equation (11).

$$\text{change in rise time (\%)} = 100\frac{(T_1 - T_0)}{T_0} \tag{10}$$

where

T_0 is the time to rise from 10% to 90% of the peak-to-peak operating voltage across the load impedance without the surge protector installed,

T_1 is the time to rise from 10% to 90% of the peak-to-peak operating voltage across the load impedance with the surge protector installed.

Copyright © 2000 IEEE. All rights reserved.
Copyright The Institute of Electrical and Electronics Engineers, Inc.
Provided by IHS under license with IEEE
No reproduction or networking permitted without license from IHS
Not for Resale

$$\text{change in decay time (\%)} = 100\frac{(T_3 - T_2)}{T_2} \quad (11)$$

where

T_2 is the time to decay from 90% to 10% of the peak-to-peak operating voltage across the load impedance without the surge protector installed,
T_3 is the time to decay from 90% to 10% of the peak-to-peak operating voltage across the load impedance with the surge protector installed.

7.13 Bit error rate (BER) test

This test is conducted to measure the change, if any, in BER caused by insertion of the surge protector.

7.13.1

Send-circuit and receive-circuit BERs are measured simultaneously (see Figure 11). Using a pseudo-random bit pattern, measure the BER at the specified baud rate(s) and voltage levels with and without the protector installed. The send and receive impedances of the BER testers shall be set to be equal to the characteristic impedance of the application.

NOTE—In the absence of specified requirements, the duration of the test in seconds shall be 10^9 divided by the baud rate.

7.13.2

The test criteria for determining BER shall be as shown in Equation (12).

$$\text{change in BER (\%)} = 100\frac{(E_1 - E_0)}{E_0} \quad (12)$$

where

E_0 is the BER without the surge protector installed,
E_1 is the BER with the surge protector installed.

8. Active performance tests

The tests in this clause are intended to characterize the ability of a surge protector to perform its protection function.

8.1 DC-limiting-voltage test

The purpose of this test is to measure the voltage at which a protector limits slowly rising voltage waveforms.

A slowly rising voltage shall be applied to the applicable protector terminals and measured as shown in Table 1. Figure 12 shows the circuit to be used for this test.

Copyright © 2000 IEEE. All rights reserved.

Copyright The Institute of Electrical and Electronics Engineers, Inc.
Provided by IHS under license with IEEE
No reproduction or networking permitted without license from IHS
Not for Resale

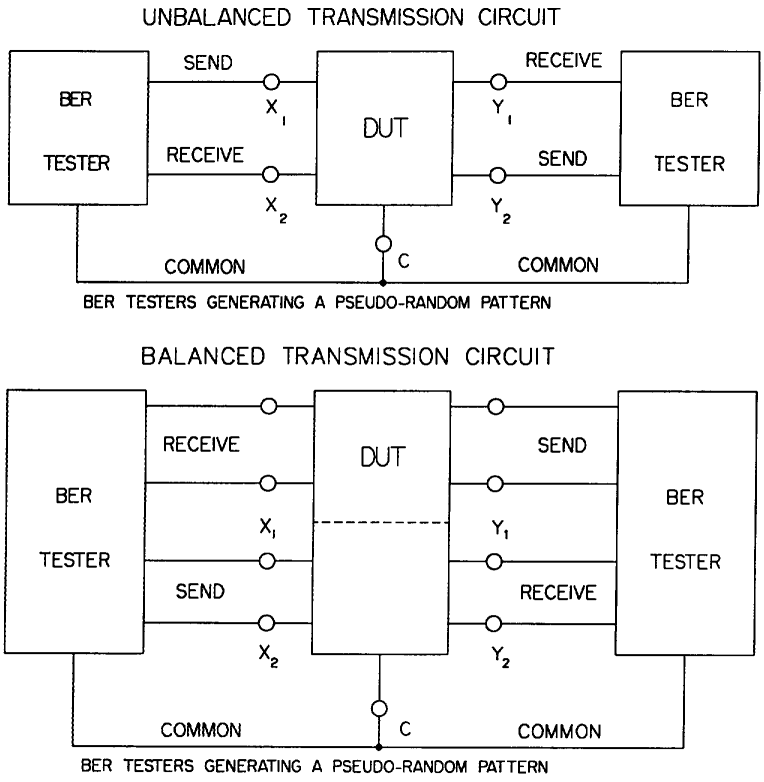

C = common terminal
DUT = device under test
X_1, X_2, Y_1, Y_2 = signal terminals

Figure 11—Test circuits for the bit error rate (BER) test

A surge protector containing a gap-type device that is not completely shielded from ambient light by means of packaging shall be placed in total darkness for at least 24 h and tested in this darkened condition without exposure to light.

Increase applied voltage *V* at a rate not to exceed 2000 V/s. Polarity shall be as specified. Terminals not connected to the test circuit shall be left open-circuited.

In Figure 12, the voltage *V* across the terminals under test shall be removed as soon as the specified current has been reached (see NOTE). R_2 and *C* are optional and should be modified to suit the energy-handling capability of the device under test (DUT). When testing a protector known to contain a gap-type device, values of R_1, R_2, and *C* specified in IEEE Std C62.31-1987 or IEEE Std C62.32-1981 shall be used. The dc-limiting voltage is the highest voltage *V* measured at any current, up to and including a specified current.

NOTE—A crowbar circuit is usually applied to terminate the dc-limiting-voltage test, thereby limiting the energy dissipated by the DUT. The method of applying the crowbar may affect the results of the test.

Copyright © 2000 IEEE. All rights reserved.
Copyright The Institute of Electrical and Electronics Engineers, Inc.
Provided by IHS under license with IEEE
No reproduction or networking permitted without license from IHS
Not for Resale

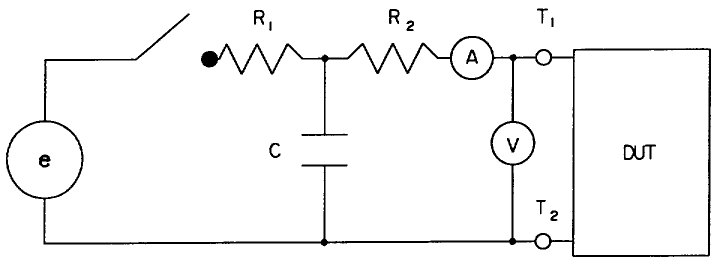

A = dc ammeter, for reading current *A*
C = charging capacitor, 0.1 μF
e = variable dc supply, for providing voltage level *e*
R_1 = charging resistor
R_2 = current-limiting resistor
T_1, T_2 = test terminals
V = dc voltmeter, for reading voltage *V*

Figure 12—Test circuit for the dc-limiting-voltage test

Table 1—Standard terminal combinations for the dc-limiting-voltage test using Figure 12

Basic configuration (number of terminals)	Terminal combination to be tested and measured (both polarities)
2a	Not applicable
2b	X_1–X_2
3a	X_1–C
3a	Y_1–C
3b	X_1–C
3b	X_2–C
3b	X_1–X_2
4	X_1–X_2
4	Y_1–Y_2
5	X_1–C
5	X_2–C
5	X_1–X_2
5	Y_1–C
5	Y_2–C
5	Y_1–Y_2

Copyright © 2000 IEEE. All rights reserved.

Copyright The Institute of Electrical and Electronics Engineers, Inc.
Provided by IHS under license with IEEE
No reproduction or networking permitted without license from IHS
Not for Resale

8.2 Impulse-limiting-voltage test

This test is conducted to measure the voltage at which a protector limits a specified fast-rising impulse.

8.2.1

The protector shall be tested with a specified impulse applied to the terminals as shown in Table 2, as applicable. Impulses are to be applied to all applicable terminal combinations, with both positive and negative polarities, using the appropriate test circuits of Figure 13.

Short-circuit current amplitude and waveform of the impulse generator shall be specified. In the absence of specified requirements, current amplitudes and associated waveforms shall be selected from Table 3, as applicable. Not all current amplitudes and waveforms of Table 3 are compatible with the suggested voltage rate-of-rise. The selected currents shall be within the rated capability of the protector. These currents are the per-terminal-pair suggested currents. For tests using three terminals, these currents are the currents in each branch under test. Both terminal pairs shall be tested at the same time and same polarity.

Table 2—Standard terminal combinations for the impulse-limiting-voltage test using Figure 13

Basic configuration (number of terminals)	Terminal combination to be tested and measured (both polarities)
2a	Not applicable
2b	X_1–X_2
3a	X_1–C
3a	Y_1–C
3b	X_1–C
3b	X_2–C
3b	X_1–X_2
4	X_1–X_2
4	Y_1–Y_2
5	X_1–C
5	X_2–C
5	X_1–X_2
5	Y_1–C
5	Y_2–C
5	Y_1–Y_2

The impulse-limiting voltage shall be measured at a specified rate-of-rise. In the absence of a specified rate-of-rise, the open-circuit output voltage of the impulse generator should be selected from 100 V/µs, 500 V/µs, 1 kV/µs, 5 kV/µs, or 10 kV/µs (Figure 14).

Copyright © 2000 IEEE. All rights reserved.
Copyright The Institute of Electrical and Electronics Engineers, Inc.
Provided by IHS under license with IEEE
No reproduction or networking permitted without license from IHS
Not for Resale

Table 3—Suggested short-circuit amplitudes and waveforms for the impulse-limiting-voltage test

Peak current (A)	Waveform (μs)
10	10/1000
50	10/1000
100	10/1000
300	10/1000
500	10/1000
1000	10/250
2000	10/250
1000	8/20
2000	8/20
5000	8/20
500	10/350
1000	10/350
2500	10/350

8.2.2

Voltage-measuring instruments, *V* (Figure 13), with appropriate frequency response, shall be used to record the peak value of the impulse-limiting voltage of the protector on all applicable combinations of terminals. Impulse-limiting voltage shall be measured both with an open circuit (R_L, R_{L1}, and $R_{L2} = \infty$) and, where appropriate, terminated with load resistors R_L, R_{L1}, and R_{L2}.

8.2.3

The test conditions (Figure 13) for determining impulse-limiting voltage are as follows:

a) The test shall be performed at the specified ambient temperature.
b) If applicable, the dc voltages e, e_1, and e_2 shall be specified for the application and shall not exceed the rated voltage of the protector.
c) R_S, R_{S1}, and R_{S2} shall be adjusted so that I, I_1, and I_2 are the bias currents specified for the application.
d) R_L, R_{L1}, and R_{L2}, as required, shall be the load resistances for the intended application.
e) The isolation device of Figure 13 passes the impulse current, but blocks I, I_1, and I_2 from the impulse generator. It is typically a diode or spark gap.
f) Sufficient time between impulses shall be allowed to prevent thermal accumulation.
g) The impulse-limiting voltage is the measured peak voltage between the appropriate terminals of the protector. In some cases, the measured peak voltage may occur well after the peak of the generator current. For each test current waveform used, at least one impulse-limiting voltage measurement shall be made over a time interval that is at least 5 times the virtual time to half-value for that waveform.

Copyright © 2000 IEEE. All rights reserved.

Copyright The Institute of Electrical and Electronics Engineers, Inc.
Provided by IHS under license with IEEE
No reproduction or networking permitted without license from IHS
Not for Resale

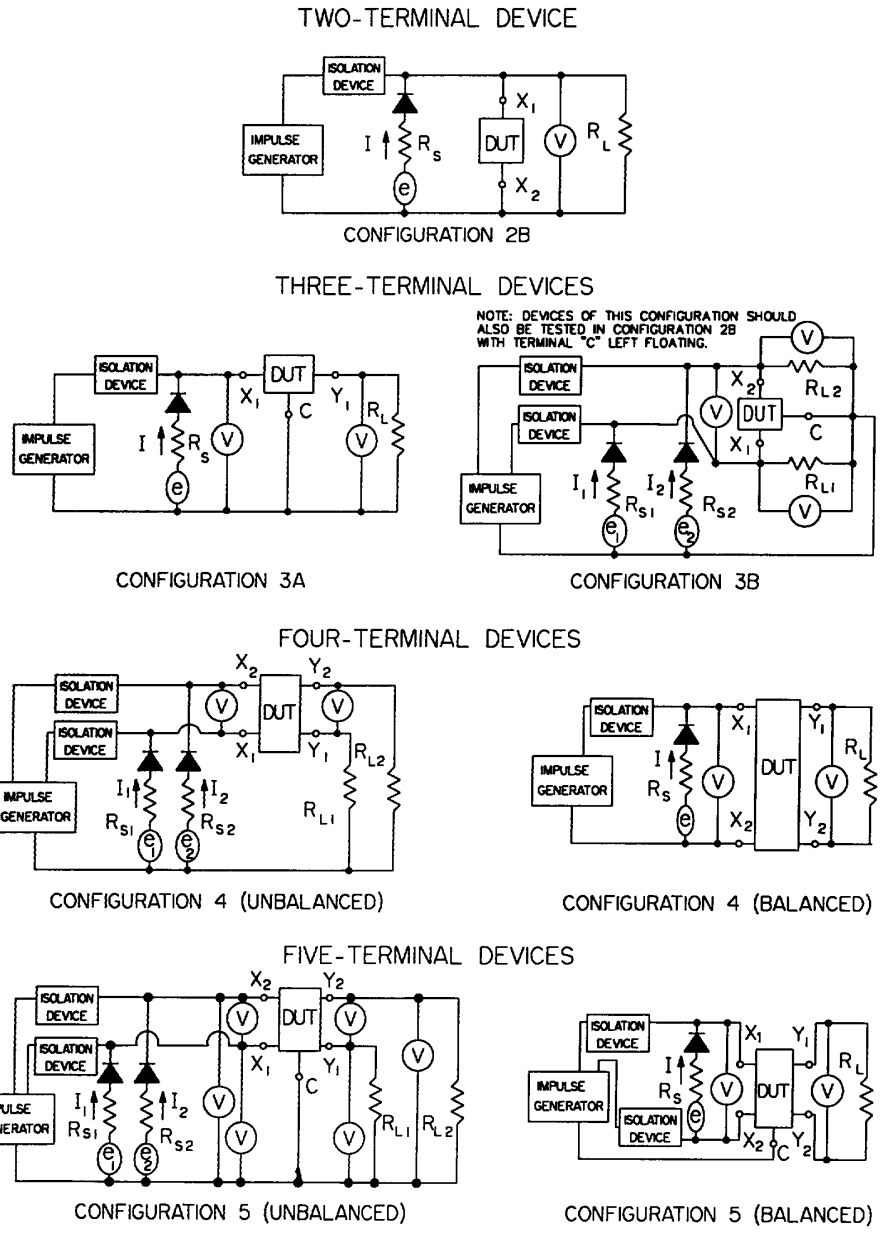

C = common terminal
DUT = device under test
e, e_1, e_2 = dc power supplies, for providing voltage level *e*
I, I_1, I_2 = bias current
R_L, R_{L1}, R_{L2} =load resistors
R_S, R_{S1}, R_{S2} = resistors for adjusting bias currents
V = voltage measuring instrument of appropriate frequency response, for measuring voltage *V*
X_1, X_2, Y_1, Y_2 = signal terminals

Figure 13—Test circuits for the impulse-limiting-voltage test

Copyright © 2000 IEEE. All rights reserved.
Copyright The Institute of Electrical and Electronics Engineers, Inc.
Provided by IHS under license with IEEE
No reproduction or networking permitted without license from IHS
Not for Resale

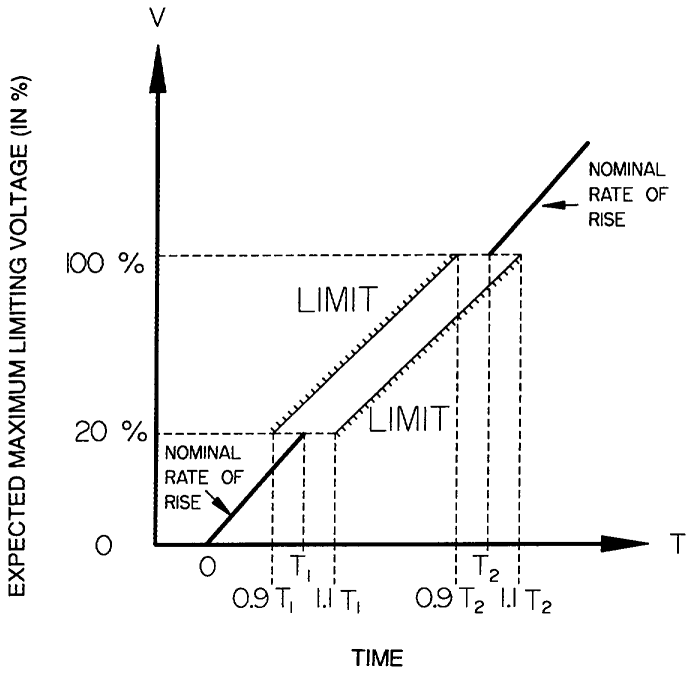

Figure 14—Impulse-limiting-voltage test waveform

.

8.3 Transition current test

The purpose of this test is to verify the current level required to cause a current-protective device in a surge protector to change state at a given ambient temperature and within a specified duration.

The surge protector, mounted as intended to be used, shall be placed in a chamber maintained at the specified test temperature. The air flow shall be controlled to provide a free-convection heat-transfer environment with the protector shielded from direct flow of forced air. The surge protector shall be allowed to stabilize at the test temperature.

Specified terminal pairs containing a current-protective device shall be connected in series with a dc or ac voltage source of specified frequency, a specified load resistance, and an ammeter or oscilloscope with current shunt, as shown in Figure 15. (Configurations are from Figure 1).

The open-circuit voltage of the source(s) e, e_1, and e_2 shall be the specified blocking voltage of the current-protective devices. For each surge-protector configuration, a specified load current, up to rated current, shall be applied by adjusting R_S, R_{S1}, and R_{S2} during the stabilization period (Figure 15). Next, the source resistances R_S, R_{S1}, and R_{S2} shall be reduced such that the load current increases to a level at or above the transition current level.

The transition current shall be applied until the current in the load resistor ceases or is reduced to a specified value that indicates that the current-protective device has operated.

The current-protective device shall interrupt or reduce the current in the load resistor within a specified time after the transition current has been applied.

Copyright © 2000 IEEE. All rights reserved.

Copyright The Institute of Electrical and Electronics Engineers, Inc.
Provided by IHS under license with IEEE
No reproduction or networking permitted without license from IHS
Not for Resale

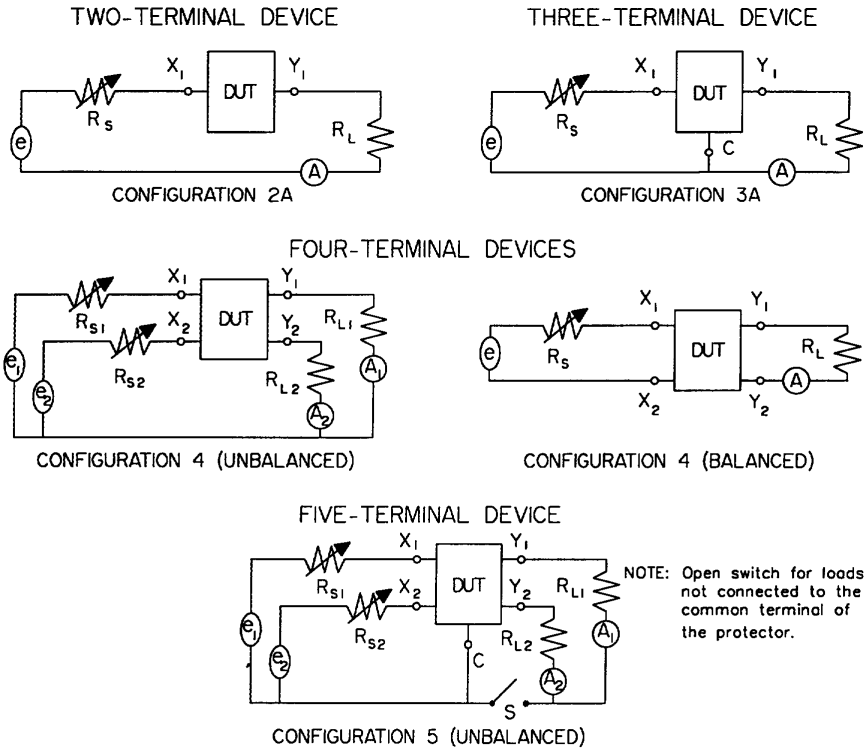

A, A_1, A_2	=	ammeter or oscilloscope with current shunt, for reading current *A*
C	=	common terminal
DUT	=	device under test
e, e_1, e_2	=	power sources, for providing voltage level *e*
R_L, R_{L1}, R_{L2}, R_S, R_{S1}, R_{S2}	=	noninductive resistors
S	=	switch
X_1, X_2, Y_1, Y_2	=	signal terminals

Figure 15—Test circuits for the transition current test

NOTES

1—Where specified, either e_1 or e_2 in the unbalanced network configurations of Figure 15 may be set to zero. This may be done to establish the maximum time for transition if surge protectors contain components with thermal interaction.

2—This test may be conducted as an extension of the current reset test in 8.6 in order to minimize repetition of tests.

3—Some automatic reset-type current-protective devices may return to their original state within a specified time. Current-protective devices that are designed to operate only one time, such as fuses, shall remain in the post-transition state.

8.4 Current-response-time test

This test is conducted to determine the time required for the load current to decline to a specified value after a source current is applied to a current-protective device.

Copyright © 2000 IEEE. All rights reserved.
Copyright The Institute of Electrical and Electronics Engineers, Inc.
Provided by IHS under license with IEEE
No reproduction or networking permitted without license from IHS
Not for Resale

8.4.1

The current-limiting protector, mounted as intended to be used, shall be placed in a chamber maintained at the specified test temperature. The air flow shall be controlled to provide a free-convection heat-transfer environment, unless otherwise specified. The current-protective device shall then be allowed to stabilize at the test temperature. A load current, up to the rated current of the DUT, may be applied during the stabilization period, if specified.

Using the test circuits shown in Figure 16, the dc supply, *e*, is adjusted to a specified value. Table 4 shows the open and closed condition of the various switches for each network and its corresponding calibration and test procedure. Calibration for specified load current shall be accomplished by shorting the DUT and adjusting the load network resistors. In the case of a four- or five-terminal device, R_{L3} and R_{L4} have been added for a second load current. When two load currents are employed, each may be adjusted to different load current values, as specified.

To adjust for the abnormal test current, all switches are placed in the closed position, and the source resistor, R_S, is adjusted to obtain the specified abnormal test current.

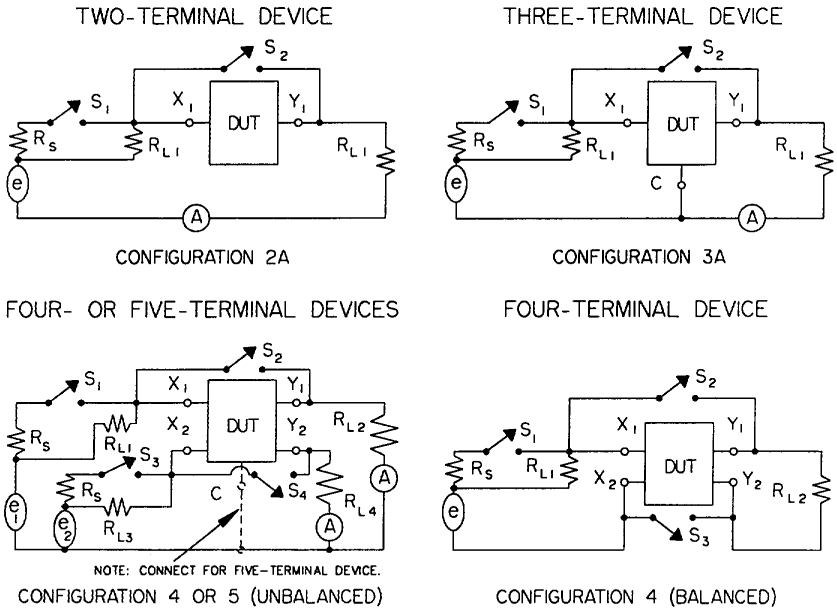

A	=	ammeter or oscilloscope with current shunt, for reading current *A*
C	=	common terminal
DUT	=	device under test
e, e_1, e_2	=	power supply, for providing voltage level *e*
R_S, R_{L1}, R_{L2}, R_{L3}, R_{L4}	=	noninductive resistors
S_1, S_2, S_3	=	switches
X_1, X_2, Y_1, Y_2	=	signal terminals

Figure 16—Test circuits for the current-response-time test

Copyright © 2000 IEEE. All rights reserved.

Copyright The Institute of Electrical and Electronics Engineers, Inc.
Provided by IHS under license with IEEE
No reproduction or networking permitted without license from IHS
Not for Resale

Table 4—Switch status and test procedures for the current-response-time test using test circuits of Figure 16

Number of protector terminals	S_1	S_2	S_3	S_4	Calibration and test procedure
2	O	O	N/A	N/A	Set load current
2	S	S	N/A	N/A	Set abnormal current
2	O	O	N/A	N/A	Stabilize
2	S	O	N/A	N/A	Measure time of current decline
3	O	O	N/A	N/A	Set load current
3	S	S	N/A	N/A	Set abnormal current
3	O	O	N/A	N/A	Stabilize
3	S	O	N/A	N/A	Measure time of current decline
4	O	O	O	O	Set load currents
4	S	S	S	S	Set abnormal currents
4	O	O	O	O	Stabilize
4	S	O	S	O	Measure times of current declines
4	O	O	O	O	Set load currents
4	S	S	O	O	Set abnormal current, R_{L1}, R_{L2}
4	O	O	O	O	Stabilize
4	S	S	O	O	Measure times of current declines
4	O	O	O	O	Set load currents
4	O	O	S	S	Set abnormal current, R_{L3}, R_{L4}
4	O	O	O	O	Stabilize
4	O	O	S	S	Measure times of current decines
4B	O	O	O	N/A	Set load current
4B	S	S	S	N/A	Set abnormal current
4B	O	O	O	N/A	Stabilize
4B	S	O	O	N/A	Measure time of current decline

NOTE—A five-terminal device is tested in the same manner as a four-terminal unbalanced network.
KEY: 4B = four-terminal balanced network
O = open switch
S = closed switch
N/A = not applicable

8.4.2

The response-time measurement is obtained by the following procedure. Switch S_1 and/or Switch S_3 is to be closed, timing initiated, and the time required to achieve the transition current level recorded.

NOTE—The ratio of R_{L1} to R_{L2} and R_{L3} to R_{L4} shall be such that when R_S is placed in parallel with R_{L1} or R_{L3}, the resulting abnormal current will exceed the transition current level of the DUT.

Copyright © 2000 IEEE. All rights reserved.
Copyright The Institute of Electrical and Electronics Engineers, Inc.
Provided by IHS under license with IEEE
No reproduction or networking permitted without license from IHS
Not for Resale

8.5 Impulse reset test

The purpose of this test is to verify that the surge protector, when connected in a simulated application circuit, reverts to its quiescent state within a specified duration after having limited an impulse.

8.5.1

The surge protector shall be tested under the following conditions, using the appropriate test circuit of Figure 17:

a) The test shall be performed at specified ambient temperature.
b) The dc power sources e, e_1, and e_2 shall be specified for the application, and their output voltages shall not exceed the rated voltage of the surge protector.
c) R_S, R_{S1}, and R_{S2} shall be adjusted such that I, I_1, and I_2 are the currents specified for the application, with the DUT and the load resistors short-circuited.
d) R_L, R_{L1}, and R_{L2}, as required, shall be the load resistances for the intended application.
e) The short-circuit current from the impulse generator shall be specified for the application.
f) The isolating device of Figure 17 passes the impulse current but prevents currents I, I_1, and I_2 from entering the impulse generator. It is typically a diode or spark gap.
g) Some shunt-connected voltage limiters may require the addition of shunt components to assist in reverting to the quiescent state.

8.5.2

The surge protector shall be subjected to a specified impulse waveform of the same polarity as e, e_1, and e_2. Where applicable, the test shall be repeated with the polarity of the impulse and e, e_1, and e_2 reversed. In the absence of specified requirements, an impulse current waveform of 10/1000 µs should be used (waveshape designation defined in IEEE Std C62.1-1989). Voltage V or current A, as applicable, shall be monitored during the test to determine the period of time for the surge protector to revert to its quiescent state.

The surge protector shall revert to its quiescent state within the specified duration.

8.6 Current reset test

The purpose of this test is to verify that resettable, series-connected, current-protective devices in a surge protector revert to their quiescent state within a specified duration after having limited an abnormal current.

8.6.1

The surge protector, mounted as intended to be used, shall be placed in a chamber maintained at the specified test temperature. The air flow shall be controlled to provide a free-convection heat-transfer environment, unless otherwise specified. The surge protector shall be allowed to stabilize at the test temperature. A load current, up to the rated current, shall be applied by adjusting the source resistors R_S, R_{S1}, and R_{S2} during the stabilization period (Figure 18). For each surge-protector configuration, specified terminal pairs containing a current-protective device shall be connected in series with a dc or an ac current source of specified current and frequency (e, e_1, e_2), a specified load resistor (R_L, R_{L1}, R_{L2}), and an ammeter or oscilloscope with current shunt, as shown in Figure 18.

8.6.2

The source resistors R_S, R_{S1}, and R_{S2} shall be reduced such that the load current increases to a level at or above the transition current level. This current shall be applied until the current in the load resistor ceases or is reduced to a specified value that indicates that the current-protective device has operated.

Copyright © 2000 IEEE. All rights reserved.

Copyright The Institute of Electrical and Electronics Engineers, Inc.
Provided by IHS under license with IEEE
No reproduction or networking permitted without license from IHS
Not for Resale

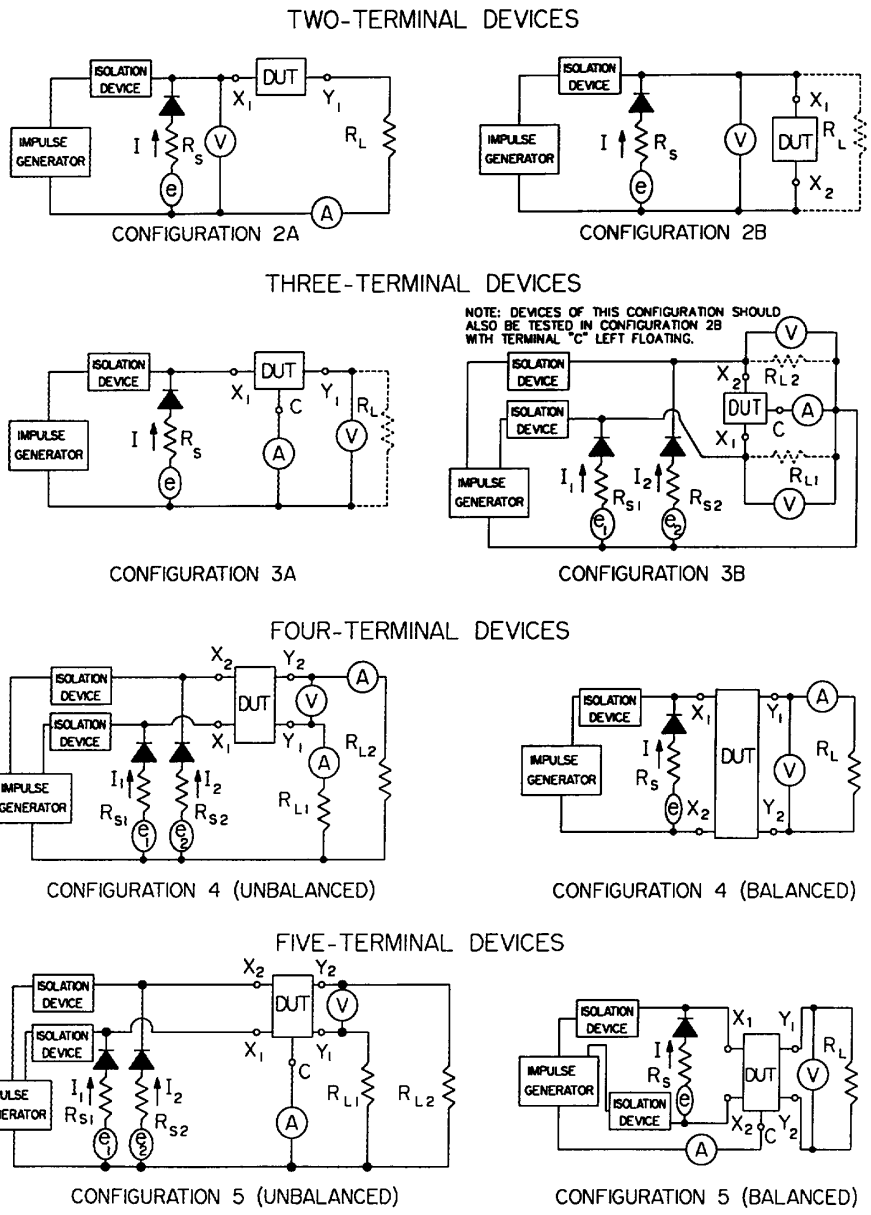

A = ammeter or oscilloscope with current shunt, for reading current *A*
DUT = device under test
e, e_1, e_2 = power sources, for providing voltage level *e*
I, I_1, I_2 = bias current
R_L, R_{L1}, R_{L2}, R_S, R_{S1}, R_{S2} = noninductive resistors
V = suitable voltmeter, for reading voltage *V*
X_1, X_2, Y_1, Y_2 = signal terminals

Figure 17—Test circuits for the impulse reset test

Copyright © 2000 IEEE. All rights reserved.
Copyright The Institute of Electrical and Electronics Engineers, Inc.
Provided by IHS under license with IEEE
No reproduction or networking permitted without license from IHS
Not for Resale

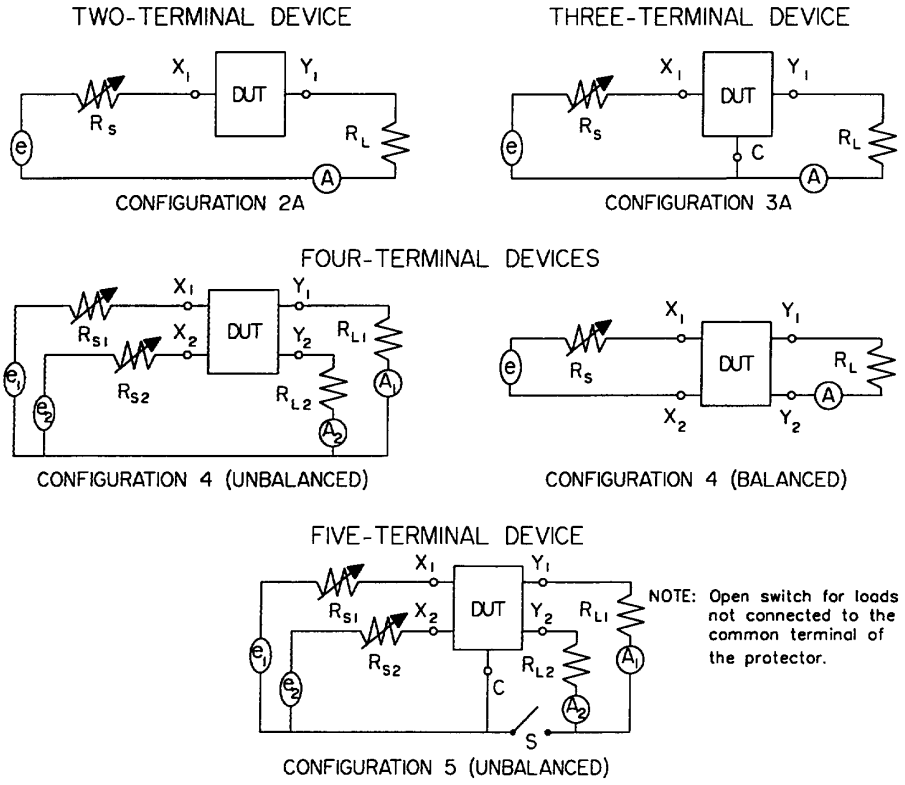

A, A_1, A_2 = ammeters or oscilloscopes with current shunt, for reading current *A*
C = common terminal
DUT = device under test
e, e_1, e_2 = dc or ac sources, for providing voltage level *e*
R_L, R_{L1}, R_{L2}, R_S, R_{S1}, R_{S2} = noninductive resistors
S = switch
X_1, X_2, Y_1, Y_2 = signal terminals

Figure 18—Test circuits for the current reset test, trip endurance test, and blocking cycle life test

The surge protector shall then be allowed to stabilize until the load current reaches an equilibrium value. At this time, the source resistors R_S, R_{S1}, and R_{S2} shall be increased to their pretransition values, and the time in which it takes for the load current to return to a specified percentage of its pretransition level shall be recorded.

NOTES

1—Some current-limiting devices in selected applications may not revert to the pretransition quiescent state without interruption of the bias sources *e*, e_1, and e_2.

2—Where specified, either e_1 or e_2 in the unbalanced network configurations of Figure 18 may be set to zero. This may be done to establish the maximum time for return to the pretransition quiescent state if surge protectors contain components with thermal interaction.

3—This test may be conducted as an extension of the transition current test of 8.3 in order to minimize repetition of tests.

The load current shall return to within a specified percentage of the pretransition quiescent state within a specified period of time after the transition current has been removed.

Copyright © 2000 IEEE. All rights reserved.

Copyright The Institute of Electrical and Electronics Engineers, Inc.
Provided by IHS under license with IEEE
No reproduction or networking permitted without license from IHS
Not for Resale

8.7 AC life test

This test is performed to verify that a surge protector can conduct alternating current of specified parameters for a given number of repetitions without experiencing a failure mode relevant to the application (see Clause 9).

8.7.1

The surge protector shall be tested with the terminal configurations in Figure 19 at the following conditions, to be specified:

a) Peak value of the ac voltage V, V_1, or V_2 measured across the terminals of the DUT with the DUT replaced with an open circuit.

   The peak value of the open-circuit ac voltage applied to the surge protector shall be at least twice the maximum dc-limiting voltage of the protector. For current-limiting devices, V, V_1, or V_2 shall be the rated voltage.

   For protectors with an ac rated voltage, at least twice that voltage should be used. In order to test surge protectors that may have blind spots (see IEEE Std C62.45-1992), ac life tests shall be run at lower open-circuit ac voltages; unless otherwise specified, 80% of the maximum dc-limiting voltage shall be used.

b) RMS value of ac current A measured with the DUT replaced with a short circuit across all its terminals. Adjust R_S, R_{S1}, or R_{S2} to give the specified value.

c) Frequency of the source e. In the absence of specified requirements, 50 Hz or 60 Hz should be used.

d) Number of operations. Each operation may be sufficiently separated in time to avoid thermal accumulation in the surge protector.

e) Duration of each operation.

f) Load resistor R_L, R_{L1}, and R_{L2}.

NOTE—In the absence of specified current level and test duration, it is recommended that ac life-test parameters be selected from Table 5. Measurement of specified performance parameters shall be done after each operation. It is recommended that insulation resistance, dc-limiting voltage, and impulse-limiting voltage be measured after each ac life-test surge, in that order.

8.7.2

Record whether the surge protector satisfies a predetermined set of operating parameters after exposure to the specified number of operations without experiencing a failure mode relevant to the application (see Clause 9).

8.8 Impulse life test

This test is performed to verify that a surge protector can conduct an impulse current of specified parameters, for a given number of repetitions, without experiencing a failure mode relevant to the application (see Clause 9).

8.8.1

For a specified number of surge protectors, first determine both the maximum and minimum impulse-limiting voltage using a voltage rate-of-rise of 100 V/μs, unless otherwise specified.

Copyright © 2000 IEEE. All rights reserved.
Copyright The Institute of Electrical and Electronics Engineers, Inc.
Provided by IHS under license with IEEE
No reproduction or networking permitted without license from IHS
Not for Resale

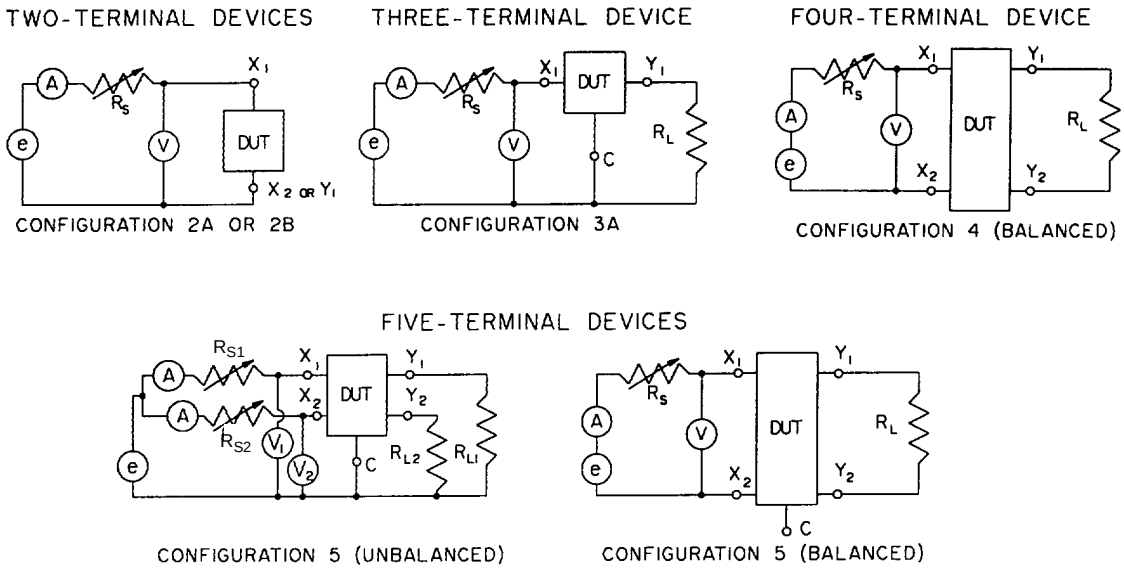

A = ac ammeter, for reading current *A*
C = common terminal
DUT = device under test
e = ac power source, for providing voltage level *e*
R_L, R_{L1}, R_{L2}, R_S, R_{S1}, R_{S2} = noninductive resistors
V, V_1, V_2 = suitable voltage-measuring instruments, for reading voltage *V*
X_1, X_2, Y_1, Y_2 = signal terminals

Figure 19—Test circuits for the ac life test

Table 5—Examples or parameters for the ac life test

Current level (A rms)	Test duration
20.0	11.0 cycles
65.0	11.0 cycles
200.0	11.0 cycles
10.0	1.0 s
1.0	1.0 s
120.0	0.1 s
0.5	30.0 s
0.2	Continuously[a]
0.5	Continuously[a]
1.0	Continuously[a]
2.0	Continuously[a]
5.0	Continuously[a]

[a]Until a specified equilibrium condition is reached.

Copyright © 2000 IEEE. All rights reserved.

Copyright The Institute of Electrical and Electronics Engineers, Inc.
Provided by IHS under license with IEEE
No reproduction or networking permitted without license from IHS
Not for Resale

8.8.2

The surge protector shall then be connected to an impulse-current generator capable of providing, in the absence of specified requirements, one or more of the waveforms listed in Table 6. The short-circuit current waveforms in Table 6 are obtained when all generator terminals are short-circuited.

The currents of Table 6 are the per-terminal-pair suggested currents. For tests using three-terminal surge protectors, these currents are applied to each branch under test (i.e., both line terminals shall be exposed to the same current and polarity simultaneously with respect to the common terminal). Table 7 lists the terminal-pair combinations for each basic configuration. For basic Configuration 4, terminals X_1, X_2 or Y_1, Y_2 may be connected together to create a common terminal for the simultaneous test.

The peak open-circuit voltage of the impulse generator shall exceed the maximum impulse-limiting voltage determined in 8.8.1 at the input of the surge protector under test by not less than 50%.

Separate samples shall be tested for each test current waveform and polarity used. The voltage rate-of-rise of the impulse life surge shall be specified. Sufficient time between impulses shall be allowed to prevent thermal accumulation in the surge protector under test. Unless otherwise specified, the intersurge time shall be as listed in Table 6.

Table 6—Suggested short-circuit current amplitudes, time between impulses, and waveform pulse life test

Peak short-circuit current (A)	Maximum time between impulses (min)	Waveform (μs)
10	2	10/1000
50	2	10/1000
100	2	10/1000
300	2	10/1000
500	2	10/1000
1 000	5	10/250
2 000	5	10/250
5 000	5	8/20
10 000	5	8/20
20 000	5	8/20
500	2	10/350
1 000	2	10/350
2 500	2	10/350

Copyright © 2000 IEEE. All rights reserved.
Copyright The Institute of Electrical and Electronics Engineers, Inc.
Provided by IHS under license with IEEE
No reproduction or networking permitted without license from IHS
Not for Resale

Table 7—Standard terminal combinations for the impulse life test

Basic configuration	Test terminals	Other terminals[a]
2A	$X_1 - Y_1$	Not applicable
2B	$X_1 - X_2$	Not applicable
3A	$X_1 - C$	$Y_1 - C$
3A	$Y_1 - C$	$X_1 - C$
3B	$X_1 - C$	$X_2 - C$
3B	$X_2 - C$	$X_1 - C$
3B	$X_1 - X_2$	Not applicable
3B	$X_1 - C$[b] $X_2 - C$[b]	Not applicable
4	$X_1 - X_2$	$Y_1 - Y_2$
4	$Y_1 - Y_2$	$X_1 - X_2$
4	$X_1 - Y_1$[b] $X_2 - Y_2$[b]	Not applicable
5	$X_1 - C$	$Y_1 - C$
5	$X_2 - C$	$Y_2 - C$
5	$X_1 - C$[b] $X_2 - C$[b]	$Y_1 - C$ $Y_2 - C$
5	$Y_1 - C$	$X_1 - C$
5	$Y_2 - C$	$X_2 - C$
5	$Y_1 - C$[b] $Y_2 - C$[b]	$X_1 - C$ $X_2 - C$
5	$X_1 - X_2$	$Y_1 - Y_2$
5	$Y_1 - Y_2$	$X_1 - X_2$

[a]These terminals, depending on specific requirements, may be connected with a specified impedance $0 \leq Z < \infty$.
[b]Both sets of terminals are tested simultaneously.

8.8.3

In order to test surge protectors that may have blind spots (see IEEE Std C62.45-1992), impulse life tests shall be conducted using peak open-circuit voltages that are lower than those in 8.8.2. The peak open-circuit voltage of the generator during impulse life tests for blind spots shall be 80% of the minimum impulse voltage obtained in 8.8.1, unless otherwise specified. The same impulse test generator waveform and internal impedance as selected for use in 8.8.2 shall be used, but at a lower peak open-circuit voltage.

8.8.4

Refer to Clause 9 for failure criteria. In the absence of specified requirements, measurements of insulation resistance, dc-limiting voltage, and impulse-limiting voltage shall be made before each impulse-life test surge. At the completion of the test, the dc series resistance test shall be performed.

Copyright © 2000 IEEE. All rights reserved.

Copyright The Institute of Electrical and Electronics Engineers, Inc.
Provided by IHS under license with IEEE
No reproduction or networking permitted without license from IHS
Not for Resale

8.9 Maximum single-impulse discharge test

This test is conducted to determine the capability of a surge protector to conduct a specified current impulse without experiencing a failure mode relevant to the application (see Clause 9).

A surge protector shall be tested only once with an impulse; different samples shall be tested for each polarity or waveform.

In the absence of specified requirements, an impulse-current waveform of either 8/20 μs or 10/1000 μs is recommended. (Waveform designation is defined in IEEE Std C62.1-1989.) The peak value of the current waveform shall be as specified. (See Table 8 for test configurations.) After application of the current impulse, the surge protector shall be tested for any relevant failure modes (see Clause 9), which shall then be verified. Terminal combinations appropriate to the application shall be specified for testing. For basic Configuration 4, terminals X_1, X_2 or Y_1, Y_2 may be connected together to create a common terminal for the simultaneous test. Different peak current levels and waveforms may be appropriate for various combinations of surge protector terminals. None of the relevant failure modes shall occur.

8.10 Trip endurance test

This test is performed to verify that, after being subjected to an extended fault condition, a surge protector containing a positive-temperature-coefficient (PTC) current-protective device continues to function.

8.10.1

The surge protector, mounted as intended to be used, shall be placed in a chamber maintained at the specified test temperature. Air flow shall be controlled to provide a free convection heat transfer environment with the protector shielded from direct flow of forced air. The surge protector shall be allowed to stabilize at the test temperature.

8.10.2

For each appropriate surge protector configuration shown in Figure 18, specified terminal pairs containing a PTC current-protective device shall be connected in series with a dc or ac voltage source(s) e, e_1, or e_2, and a specified load resistance R_L, R_{L1}, or R_{L2}. The voltage source(s) shall have an open-circuit voltage equal to the blocking voltage of the PTC device. An initial specified current that is greater than the transition current shall be applied by adjusting the source resistance R_S, R_{S1}, and R_{S2} of Figure 18. The level of current is indicated on ammeters A, A_1, and A_2. The duration of application of the current shall be specified. After the specified duration, the output of the voltage source(s) is reduced to 0 V.

8.10.3

At a specified time after reducing the voltage source(s) to zero, the surge protector shall satisfy specified performance requirements (see Clause 9).

8.11 Blocking-cycle life test

This test is performed to verify that a surge protector containing a positive-temperature-coefficient (PTC) current-protective device continues to function after being subjected to repeated fault conditions.

Copyright © 2000 IEEE. All rights reserved.
Copyright The Institute of Electrical and Electronics Engineers, Inc.
Provided by IHS under license with IEEE
No reproduction or networking permitted without license from IHS
Not for Resale

Table 8—Standard terminal combinations for maximum, single-impulse discharge test

Basic configuration	Test terminals	Other terminals[a]
2A	$X_1 - Y_1$	Not applicable
2B	$X_1 - X_2$	Not applicable
3A	$X_1 - C$	$Y_1 - C$
3A	$Y_1 - C$	$X_1 - C$
3B	$X_1 - X_2$	Not applicable
3B	$X_1 - C$[b] $X_2 - C$[b]	Not applicable
4	$X_1 - X_2$	$Y_1 - Y_2$
4	$Y_1 - Y_2$	$X_1 - X_2$
4	$X_1 - Y_1$[b] $X_2 - Y_2$[b]	Not applicable
5	$X_1 - C$[b] $X_2 - C$[b]	$Y_1 - C$ Y2 – C
5	$Y_1 - C$[b] $Y_2 - C$[b]	$X_1 - C$ $X_2 - C$
5	$X_1 - X_2$	$Y_1 - Y_2$
5	$Y_1 - Y_2$	$X_1 - X_2$

[a]These terminals, depending on specific requirements, may be connected with a specified impedance $0 \le Z < \infty$.
[b]Both sets of terminals are tested simultaneously.

8.11.1

The surge protector, mounted as intended to be used, shall be placed in a chamber maintained at the specified test temperature. Air flow in the chamber shall be controlled to provide a free convection heat transfer environment with the protector shielded from direct flow of forced air. The surge protector shall be allowed to stabilize at the test temperature.

8.11.2

For each appropriate surge protector configuration of Figure 18, specified terminal pairs containing a PTC current-protective device shall be connected in series with a dc or ac voltage source(s) e, e_1, or e_2, and a specified load resistance R_L, R_{L1}, or R_{L2}. The open-circuit output of the voltage source(s) is the specified blocking voltage of the PTC device. A specified current, which shall be greater than the transition current, shall be applied by adjusting the source resistance R_S, R_{S1}, and R_{S2} of Figure 18. During this adjustment, the protector temporarily is removed from the circuit and is replaced by a resistor equal to the dc series resistance of the PTC device (see 7.3). The level of current, as indicated on ammeters A, A_1, and A_2, may affect results of the blocking-cycle life test.

After a specified duration, the current is reduced to zero by setting the output of the voltage source(s) to 0 V, and the protector is allowed to remain unpowered for a specified period of time. During its unpowered period the device shall return to its low-resistance state. (This state is indicated by the current in the device just after the source(s) are reapplied.) This cycle of applying current, followed by an unpowered period, shall be repeated a specified number of times.

Copyright © 2000 IEEE. All rights reserved.

Copyright The Institute of Electrical and Electronics Engineers, Inc.
Provided by IHS under license with IEEE
No reproduction or networking permitted without license from IHS
Not for Resale

8.11.3

At a specified time after reducing the current to zero at the end of the final cycle, the surge protector shall satisfy specified performance requirements (see Clause 9).

8.12 Environmental cycling with impulse surges test

This test is performed to verify that a voltage-limiting surge protector can conduct surges of specified parameters while undergoing temperature cycling at high humidity for a specified period of time.

8.12.1

In the absence of a specified noncondensing temperature cycle at high humidity, surge protectors shall be exposed to the noncondensing environmental cycle in Figure 20. Unless otherwise specified, exposure to the cycle shall be for thirty days. During the exposure, impulse currents with a peak open-circuit voltage, exceeding the maximum impulse-limiting voltage of the DUT determined in 8.2, with a specified rate-of-rise, shall be applied. A specified short-circuit current waveform selected from Table 6 shall also be applied. The duration of the cycling exposure shall be such that the number of applied surges does not exceed the Impulse Life specification of the protector (8.8).

Two impulse currents shall be applied each cycling day, except that for cycling periods longer than five days the surges shall be applied for five consecutive days followed by two days without application. On each surge day, one impulse current is applied at high extreme temperature (32.2 °C, 90 °F) and the other at low extreme temperature (4.4 °C, 40° F). The surges shall be applied within one hour of the center of the band at low and high extreme temperatures. The impulse currents on a given day shall be of the same polarity, but shall alternate polarity every other day. This procedure shall be repeated until completion of the environmental cycling.

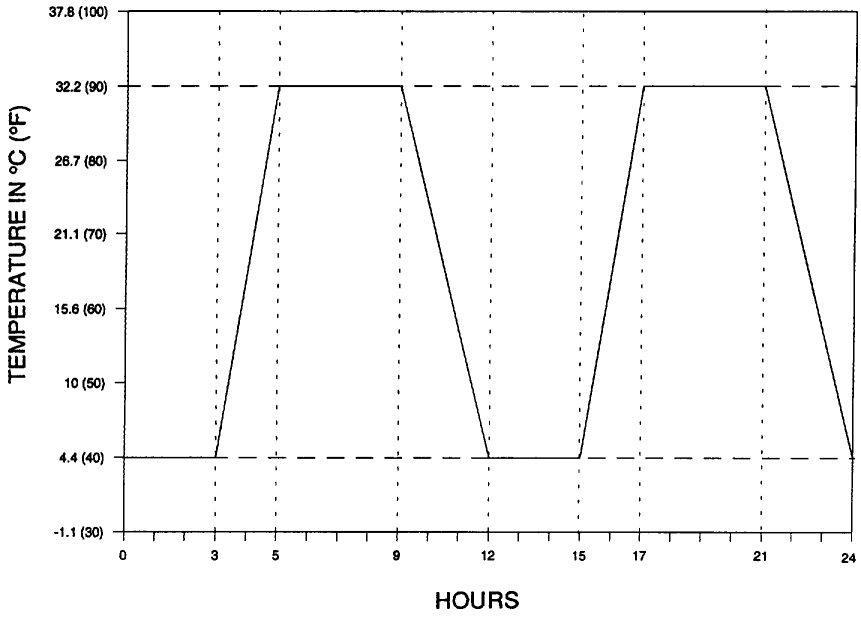

Figure 20—Environmental cycling test with relative humidity at 90% or greater

Copyright © 2000 IEEE. All rights reserved.
Copyright The Institute of Electrical and Electronics Engineers, Inc.
Provided by IHS under license with IEEE
No reproduction or networking permitted without license from IHS
Not for Resale

The surge protector shall be tested using the appropriate test circuit of Figure 21. The protector shall be powered with a dc supply throughout the environmental cycling. The level of the dc supply shall be specified and shall not exceed the voltage rating of the protector; polarity shall be specified. The protector shall not be powered with the dc supply during the application of impulse current.

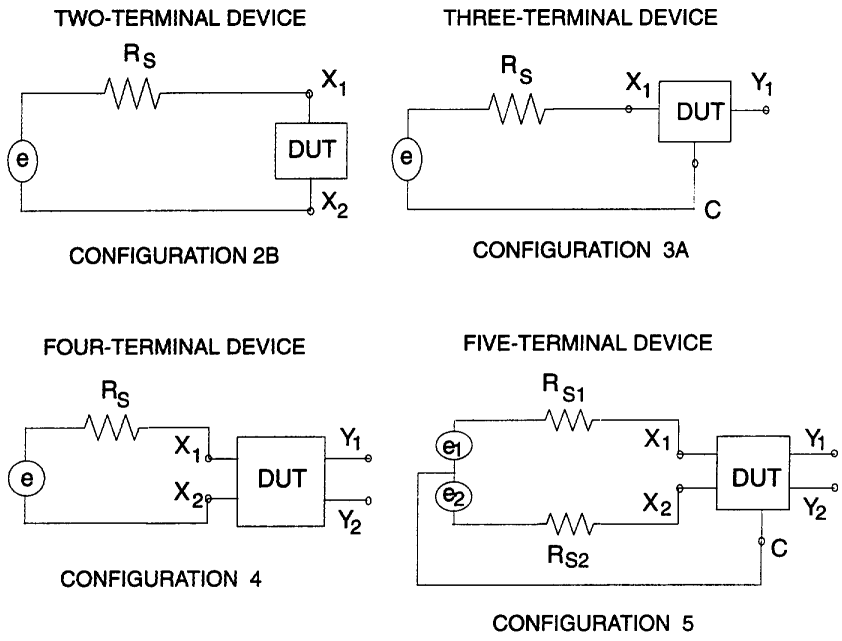

e, e_1, e_2 = variable dc supply, for providing voltage level *e*
R_S, R_{S1}, R_{S2} = current-limiting resistor

Figure 21—Powering protectors for environmental cycling

8.12.2

For voltage-limiting protectors, the impulse-limiting voltage shall be measured during the application of each impulse current. The insulation resistance and dc-limiting voltage shall be measured within one hour after each surge application. If the protectors are known to be sensitive to the polarity of the dc supply, they should be tested for insulation resistance and dc-limiting voltage with both positive and negative polarities. The protectors shall satisfy performance requirements for insulation resistance and dc-limiting voltage at each measurement.

8.12.3

Within one hour after the end of environmental cycling, the protector shall satisfy specified performance requirements (see Clause 9).

8.13 Environmental cycling with ac surges test

This test is performed to verify that a voltage-limiting surge protector can conduct an ac current of specified parameters while undergoing temperature cycling at high humidity for a specified period of time.

Copyright © 2000 IEEE. All rights reserved.

Copyright The Institute of Electrical and Electronics Engineers, Inc.
Provided by IHS under license with IEEE
No reproduction or networking permitted without license from IHS
Not for Resale

8.13.1

In the absence of a specified noncondensing temperature cycle at high humidity, surge protectors shall be exposed to the noncondensing cycle in Figure 20. Unless otherwise specified, exposure to the cycle shall be for thirty days. During the exposure, ac current surges with parameters selected from the noncontinuous currents in Table 5, shall be applied. The peak open-circuit ac voltage applied to the protector shall be at least twice the maximum dc-limiting voltage of the protector. The duration of the cycling exposure shall be such that the number of applied surges does not exceed the ac life specification of the protector (8.7).

Two ac current surges shall be applied each cycling day, except that for cycling periods longer than five days the surges shall be applied for five consecutive days followed by two days without application. On each surge day, one ac current surge is applied at high extreme temperature (32.2 °C, 90 °F) and the other at low extreme temperature (4.4 °C, 40 °F). The surges shall be applied within one hour of the center of the band at low and high extreme temperatures. This procedure shall be repeated until completion of the environmental cycling.

The surge protector shall be tested using the appropriate test circuit of Figure 21. The protector shall be powered with a dc supply throughout the environmental cycling. The level of the dc supply (0 V or greater) shall be specified and shall not exceed the dc voltage rating of the protector; polarity shall be specified. The protector shall not be powered with the dc supply during the application of ac current.

8.13.2

For voltage-limiting protectors, the insulation resistance and dc-limiting voltage shall be measured within one hour after each surge application. If the protectors are known to be sensitive to the polarity of the dc supply, they should be tested for insulation resistance and dc-limiting voltage with both positive and negative polarities. The protectors shall satisfy performance requirements for insulation resistance and dc-limiting voltage at each measurement.

8.13.3

Within one hour after the end of environmental cycling, the protector shall satisfy specified performance requirements (see Clause 9).

8.14 Multiport coupling test

This test is performed to verify that a surge, applied to one of the ports or other designated terminals of a multiport surge protector, does not result in a coupled surge that exceeds a specified amplitude or duration on other ports of the surge protector.

This test is intended for multiport surge protectors that provide surge protection for paired-conductor, coaxial, or other circuits (see Table 9, Note 1) that serve equipment within a premises. Cables from one or more circuits enter a multiport surge protector at ports designated as *input*, while protected equipment is connected to ports designated as *equipment* or *output*.

8.14.1

The multiport surge protector shall be tested with a specified impulse applied to each input port or other designated terminals, as applicable. The impulse specified for one input port may differ from the impulse specified for other types of ports on the same multiport surge protector. The short-circuit current amplitude and waveform, and the open-circuit voltage amplitude and waveform, of the impulse generator shall be specified. In the absence of specified requirements, current amplitudes and associated waveforms shall be selected from Table 9, as applicable.

Copyright © 2000 IEEE. All rights reserved.
Copyright The Institute of Electrical and Electronics Engineers, Inc.
Provided by IHS under license with IEEE
No reproduction or networking permitted without license from IHS
Not for Resale

Table 9—Recommended short-circuit amplitudes and waveforms for the multiport coupling test

Peak current (A)	Source impedance (Ω)	Waveform
1000	2	8/20 µs
2000	2	8/20 µs
3000	2	8/20 µs
330	12	0.5 µs – 100 kHz (see Note 2)
500	12	0.5 µs – 100 kHz (see Note 2)

NOTES

1—A multiport surge protector could include an ac power port, which may need to be tested.

2—The oscillatory (ring wave) waveform is defined in IEEE Std C62.41-1991.

8.14.2

The impulse current shall be applied at each applicable port, separately and not simultaneously, between each applicable line and common terminal or other designated terminals; and the resulting coupled voltage and waveform shall be measured at each of the other ports, between the line and common terminals or other designated terminals. See Table 10 for combinations of terminal pairs to be tested with reference to Figure 22.

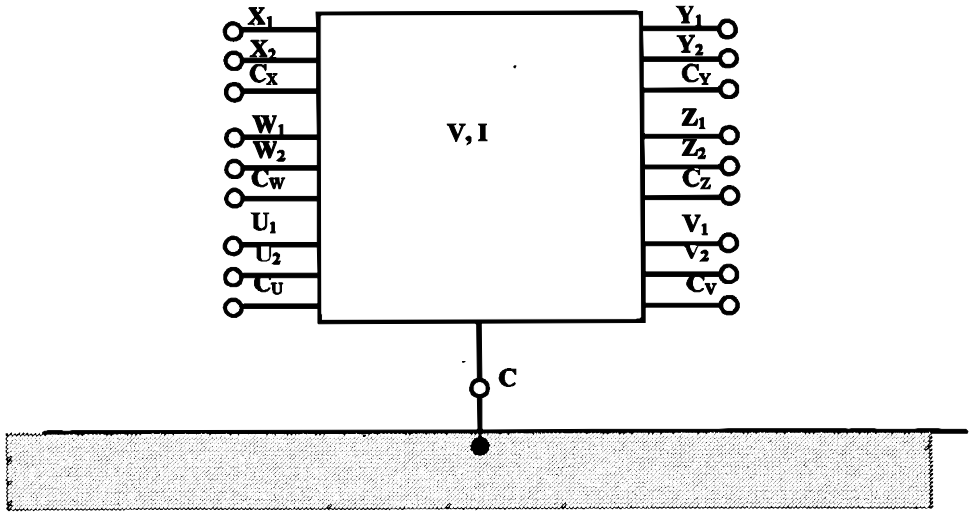

C	=	common terminal of multiport surge protector
I	=	current-limiting function
V	=	voltage-limiting function
X_1–X_2, W_1–W_2, U_1–U_2	=	input port
Y_1–Y_2, Z_1–Z_2, V_1–V_2	=	output port
C_X, C_W, C_U	=	common terminal at input port
C_Y, C_Z, C_V	=	common terminal at output port

Figure 22—Representative configuration for multiport coupling test

Copyright © 2000 IEEE. All rights reserved.

Copyright The Institute of Electrical and Electronics Engineers, Inc.
Provided by IHS under license with IEEE
No reproduction or networking permitted without license from IHS
Not for Resale

Table 10—Terminal combinations for multiport coupling test

Apply impulse to:	Measure coupled surge on:
$(X_1 + X_2) – C$	$Z_1 – C_Z$ $Z_1 – C$ $C_Z – C$
$(X_1 + X_2) – C_X$	$Z_1 – C_Z$ $Z_1 – C$ $C_Z – C$
$W_1 – C_W$	$(Y_1 + Y_2) – C_Y$ $(Y_1 + Y_2) – C$
$C_W – C$	$(Y_1 + Y_2) – C_Y$ $(Y_1 + Y_2) – C$ $C_Y – C$
$(U_1 + U_2) – C$	$(Y_1 + Y_2) – C_Y$ $(Y_1 + Y_2) – C$ $Z_1 – C_Z$ $Z_1 – C$ $C_Z – C$
$C_U – C$	$(Y_1 + Y_2) – C_Y$ $(Y_1 + Y_2) – C$ $Z_1 – C_Z$ $Z_1 – C$ $C_Z – C$ $C_Y – C$
NOTE—Expressions in parentheses indicate terminal pairs to be connected and treated as one test terminal. The dashes indicate terminal pairs to receive an impulse, or to be measured. See Annex B for examples of terminal connections.	

If it is necessary to attach leads to the multiport surge protector for the purpose of applying an impulse or measuring the coupled surge, the attached leads should not exceed 15 cm (6 in) in length, or the minimum length needed to extend the connection point outside the housing of the multiport surge protector.

The test shall be performed with both polarities of the applied impulse current. Terminals that are not involved in the application of the surge, or in the measurement of the resulting coupled surge, shall be left unterminated. The voltage-measuring instruments shall have adequate frequency response to record the peak value of the coupled voltage.

If the multiport surge protector has no designated common terminal (*C*), then a terminal (e.g., a terminal for connection of equipment grounding conductor, shield of communication cable, or coaxial outer conductor) shall be designated to be the common terminal and shall be reported with the test results.

8.14.3

Measure the coupled voltage with a high-input-impedance instrument, such as an oscilloscope. The coupled voltage is the highest voltage measured at any port during the application of the impulse current to any other applicable port of the multiport surge protector.

Copyright © 2000 IEEE. All rights reserved.
Copyright The Institute of Electrical and Electronics Engineers, Inc.
Provided by IHS under license with IEEE
No reproduction or networking permitted without license from IHS
Not for Resale

If specified, the duration of the coupled voltage above a threshold voltage shall also be measured. If the duration of the coupled voltage is to be measured, it is the total duration of all excursions of the absolute magnitude of coupled voltage that are greater than the specified threshold voltage level.

Results of the multiport coupling test are the magnitude of the coupled voltage at each applicable port and, if specified, the duration above the stated threshold voltage. Also report the impulse waveform and terminal pairs used for the test.

9. Failure modes

Because of the complexity of surge protectors and their diverse range of applications, failure modes should be determined from the application of the surge protector and its internal components. The appropriate tests that determine failure shall be specified from among the tests of this standard. Criteria will be dependent on the performance requirements of the surge protector relative to the application. Generally, a failure mode has occurred when the surge protector operates outside the specified performance requirements.

Copyright © 2000 IEEE. All rights reserved.

Copyright The Institute of Electrical and Electronics Engineers, Inc.
Provided by IHS under license with IEEE
No reproduction or networking permitted without license from IHS Not for Resale

Annex A

(informative)

Examples of internal arrangements of surge-limiting devices

This annex gives some possible internal arrangements of components both in single and in combination connection for both series and parallel surge-limiting devices.

Illustrative functional configurations for the two-terminal through five-terminal devices shown in Clause 5 are given in Figure A.1, Figure A.2, and Figure A.3. The following are examples of devices applicable to these configurations:

Series element (current limiting)

— Fuse
— Circuit breaker
— Circuit protector
— Positive temperature coefficient resistor
— Heat coil
— Semiconductor device
— Thermal switch
— Current-limiting impedance
— Combinations of the above

Parallel element (voltage limiting)

— Gas discharge tube
— Avalanche diode
— Zener diode
— Foldback device
— Thyristor
— Metal oxide varistor
— Air gap
— Combinations of the above

Copyright © 2000 IEEE. All rights reserved.
Copyright The Institute of Electrical and Electronics Engineers, Inc.
Provided by IHS under license with IEEE
No reproduction or networking permitted without license from IHS
Not for Resale

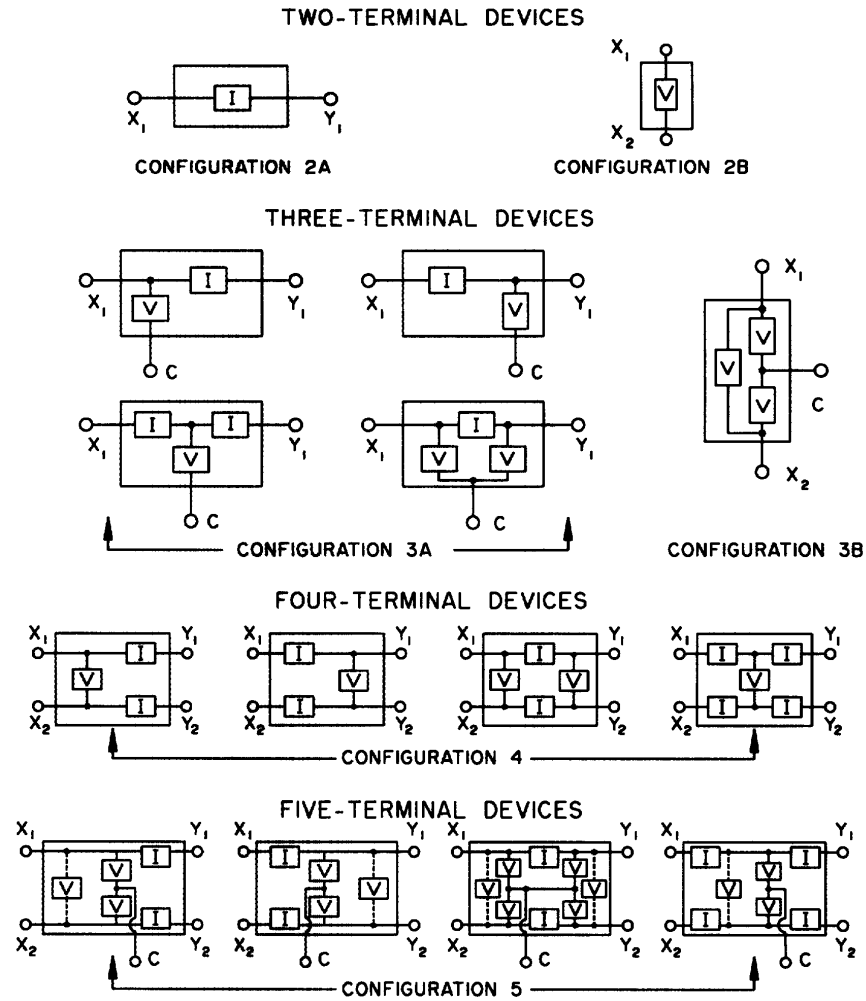

I = current-limiting component
V = voltage-limiting component

Figure A.1—Possible internal arrangement of surge-protective devices

Copyright © 2000 IEEE. All rights reserved.

Copyright The Institute of Electrical and Electronics Engineers, Inc.
Provided by IHS under license with IEEE
No reproduction or networking permitted without license from IHS
Not for Resale

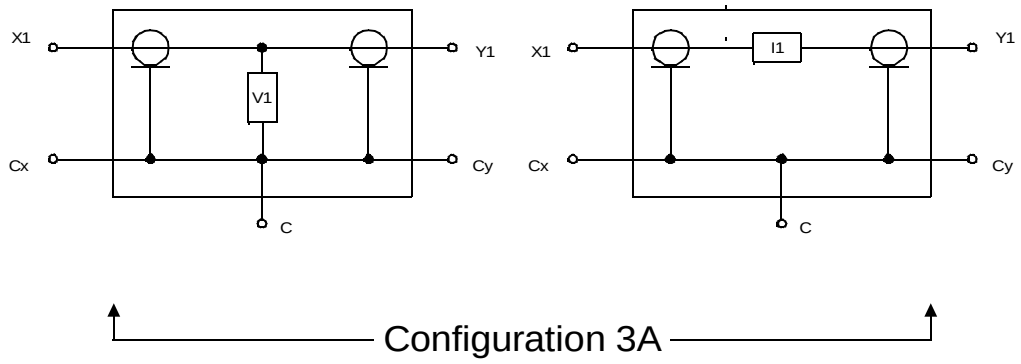

I = current-limiting component
V = voltage-limiting component

Figure A.2—Possible internal arrangement of surge protectors intended for coaxial circuits

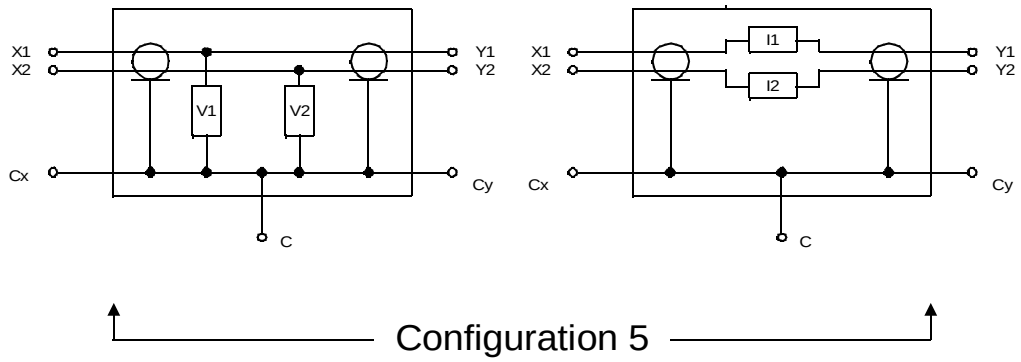

I = current-limiting component
V = voltage-limiting component

Figure A.3—Possible internal arrangement of surge protectors intended for twinaxial circuits

Copyright © 2000 IEEE. All rights reserved.
Copyright The Institute of Electrical and Electronics Engineers, Inc.
Provided by IHS under license with IEEE
No reproduction or networking permitted without license from IHS
Not for Resale

Annex B

(informative)

Examples of terminal connections for multiport surge protectors

Table B.1 shows examples of terminal connections for multiport surge protectors.

Table B.1—Terminal connections for multiport surge protectors

	Unshielded paired conductor	Shielded paired conductor	Coaxial	Twinaxial	AC power (mains)
X_1	Outside plant Tip	Outside plant Tip			
X_2	Outside plant Ring	Outside plant Ring			
C_X	N/A	Outside plant shield			
Y_1	Terminal equipment or central office Tip	Terminal equipment or CO Tip			
Y_2	Terminal equipment or CO office Ring	Terminal equipment or CO Ring			
C_Y	N/A	Terminal equipment or CO shield			
W_1			Outside plant center conductor	Outside plant center Conductor 1	
W_2			N/A	Outside plant center Conductor 2	
C_W			Outside plant shield	Outside plant shield	
Z_1			Terminal equipment center conductor	Terminal equipment center Conductor 1	
Z_2			N/A	Terminal equipment center Conductor 2	
C_Z			Terminal equipment shield	Terminal equipment shield	

Copyright © 2000 IEEE. All rights reserved.

Copyright The Institute of Electrical and Electronics Engineers, Inc.
Provided by IHS under license with IEEE
No reproduction or networking permitted without license from IHS
Not for Resale

Table B.1—Terminal connections for multiport surge protectors *(continued)*

	Unshielded paired conductor	Shielded paired conductor	Coaxial	Twinaxial	AC power (mains)
$\mathbf{U_1}$					AC mains phase
$\mathbf{U_2}$					AC mains neutral
$\mathbf{C_U}$					AC mains equipment ground
$\mathbf{V_1}$					Multiport outlet phase
$\mathbf{V_2}$					Multiport outlet neutral
$\mathbf{C_V}$					Multiport outlet equipment ground

Copyright © 2000 IEEE. All rights reserved.
Copyright The Institute of Electrical and Electronics Engineers, Inc.
Provided by IHS under license with IEEE
No reproduction or networking permitted without license from IHS
Not for Resale

Annex C

(informative)

Test measurement techniques

This annex provides general guidance on test measurement techniques that have been useful in measuring the characteristics of surge protectors.

C.1 Safety

The high voltage and current levels used in surge testing present possibly hazardous situations for personnel and equipment. In addition to the direct electrical hazards posed by surge test equipment, nonelectrical hazards exist, such as fire, heat, fragmentation, and fumes. Catastrophic failure of the circuit under test may result in an explosion, which should be guarded against. Only qualified personnel should perform the tests, with safety precautions enforced according to national codes and to the safety directives of the organization conducting the test.

C.2 Oscilloscopes

The nature of impulse measurements requires that the recording equipment be able to capture, store, and display the transient waveform. Usually, an oscilloscope is used for this purpose.

Analog and digital oscilloscopes should have rise times at least five times faster than the signal rise time. This will ensure less than 2% error in the displayed rise time. For digital oscilloscopes, the sampling rate should be such that at least five, and preferably twenty, samples are taken during the signal rise time. Measurement resolution of eight-bit digital oscilloscopes may have to be enhanced by sample averaging (which, for a single, captured transient waveform, has the effect of reducing the apparent bandwidth of the measurement), or by the use of a calibrated offset voltage to “window” the signal. Ten-bit oscilloscopes usually have sufficient resolution without the aid of these techniques.

The oscilloscope should be capable of making differential measurements, and should be adjusted to display the actual waveform. It should have adequate common-mode rejection to high frequencies, and adequate common-mode bandwidth for the task at hand. In particular, a sufficient bandwidth and sampling rate are required to capture subtle overshoots and sharp voltage perturbations that may occur.

It is important, whether measuring voltages or currents, that the whole event is examined. This generally requires taking two or more measurements at different timebase settings. Usually, the worst voltage remnant occurs at the beginning of the impulse duration; however, thermal effects, or surge protectors coming out of conduction at the conclusion of the impulse, can cause important behavior to occur later. Digital oscilloscopes with long memories often can store the entire waveform at the maximum sampling rate with a single acquisition.

C.3 Voltage measurements

A reliable and safe method for monitoring voltages is to use a differential connection of two matched voltage probes. This type of connection facilitates the use of a safely grounded oscilloscope. The high-voltage probes have no ground leads attached to the circuit under test, while all chassis are grounded by the equipment grounding conductors of the power cords.

Copyright © 2000 IEEE. All rights reserved.

Copyright The Institute of Electrical and Electronics Engineers, Inc.
Provided by IHS under license with IEEE
No reproduction or networking permitted without license from IHS
Not for Resale

When using the differential measuring technique, it is especially important that the two probes be matched as closely as possible. Use probes of the same model, and carefully set the probe compensation adjustments (where these are provided). Select the voltage rating of the probe to be adequate not just for the expected voltages, but also for voltages that may occur if something unexpected happens (such as a flashover, or other failure). Commonly, probes that have been stressed by overvoltage may not fail outright, but often read significantly low. Regular calibration of the measuring equipment is especially important in surge measurement work.

High-impedance probes used for high-voltage measurements may be bulky, and this leads to difficulties in minimizing magnetic induction effects. Such probes are often difficult to compensate exactly. An alternative is to use custom-designed differential probes that use lower impedances (thereby reducing noise pickup), have good common mode rejection at the frequencies required, and require no compensation.

Voltages can also be monitored with a current transformer. A high resistance is connected between the two points where the voltage is to be monitored, and a current transformer is used to monitor the current in the resistor, hence monitoring the voltage difference at its points of connection. The resistance should be implemented with a noninductive resistor having an appropriate surge voltage rating.

C.3.1 Evaluation of measurement noise and aberrations

A preliminary evaluation is made to reveal the amount of noise and aberration that may be present in the voltage measurements. This evaluation involves measuring the required signal and comparing it to a measurement of the noise component.

First, a measurement is made of the required signal using the differential technique. Then, while disturbing the physical setup of the instruments and cabling as little as possible, leave one probe connected to the circuit and disconnect the other probe. Then, connect a length of shorting conductor between the first probe at its point of connection to the circuit and the second, disconnected probe. The length of the shorting conductor should be such as to maintain the same probe spacing. This results in the two probes being connected together by the shorting conductor, but connected to the circuit at one point. A measurement is then made of the voltage across the shorting conductor when the test impulse is reapplied. This measurement is a good representation of any noise voltage that is present on the required signal.

If the noise component is relatively large compared to the required signal, then take steps to reduce the noise.

C.3.2 Techniques for reducing measurement error

a) Ensure that the wires from the surge generator to the circuit under test are not included in the measurement circuit. That is, connect the oscilloscope probes directly at the surge protector under test, not at the generator output terminals. This avoids including undesired voltage drops in the measurement.

b) Magnetic coupling and inductive effects can be reduced by using short lead lengths and by minimizing the wiring loop area, possibly by using twisted wires. This magnetic effect applies to the probe cables that connect to the oscilloscope; these should be routed close together using cable tie wraps, or twisted to minimize the loop area. The probes should be connected to the circuit as close together as possible, and positioned perpendicular to the direction of current.

c) Electric coupling (capacitive pickup) can be removed by interposing a Faraday shield connected to a nonsignal ground. The oscilloscope itself can be placed within a metallic enclosure, or inside a screened room; however, these measures are usually not necessary.

Copyright © 2000 IEEE. All rights reserved.
Copyright The Institute of Electrical and Electronics Engineers, Inc.
Provided by IHS under license with IEEE
No reproduction or networking permitted without license from IHS
Not for Resale

d) Electromagnetic pickup can be reduced by shielding and by the technique used for magnetic induction. Noise pickup can be significantly reduced by locating the oscilloscope as far from the generator and circuit under test as the connecting probe leads will allow. Providing an electromagnetic interference filter on the oscilloscope ac line cord can help.

e) One form of measurement aberration is caused by current circulating in the loop formed by the test generator, surge protector under test, voltage probe(s), oscilloscope, and grounding of the ac supply. The loop current can be reduced by increasing the loop impedance of the voltage probe lead(s). (This is a common-mode impedance and does not attenuate the signal.) A common-mode choke may be formed by winding the voltage probe leads onto a ferrite core. Differential measurements should be made with both voltage probe leads wound with equal turns on the same ferrite core. Alternatively, split core ferrite tubes may be clipped onto the voltage probe leads.

C.4 Current measurements

It is often necessary to measure the overall surge current, or the fraction of current in a particular path. Such monitoring detects breakdowns, enables verification of equipment ratings, and allows observation of stresses occurring within the circuit under test.

Two methods are used for measuring currents, as follows:

a) *Current transformers:* Current transformers, also called current monitors, are placed around the outside of a conductor to measure surge currents. Typical wideband, shielded, precision current transformers provide isolation from the circuit being tested. Generally, they are designed for use with a 50 Ω termination and are connected directly to an oscilloscope, or via a precision RF attenuator. Ensure that the insulation level provided between the current-carrying conductor and the viewing coil is adequate. Parameters to be considered when using a current transformer are current-time product, droop, risetime, maximum peak current, sensitivity, and bandwidth. In addition, placing a current transformer around a conductor is equivalent to inserting a small series resistance. The value of this resistance decreases as the transformer sensitivity is decreased.

b) *Resistive shunts:* In this method, a low resistance is inserted in the path of the current, and the voltage developed across the resistance is measured. The voltage across the resistance divided by the resistance gives the current. It is important that the resistance be noninductive. Resistive shunts do not provide isolation from the circuit.

Copyright © 2000 IEEE. All rights reserved.

Copyright The Institute of Electrical and Electronics Engineers, Inc.
Provided by IHS under license with IEEE
No reproduction or networking permitted without license from IHS
Not for Resale

Annex D

(informative)

Bibliography

[B1] IEEE Std 100-1996, IEEE Standard Dictionary of Electrical and Electronics Terms, Sixth Edition.

Copyright © 2000 IEEE. All rights reserved.

Copyright The Institute of Electrical and Electronics Engineers, Inc.
Provided by IHS under license with IEEE
No reproduction or networking permitted without license from IHS

Not for Resale