IEEE Standard Test Specifications for Gas-Tube Surge-Protective Devices

Sponsor
Surge-Protective Devices Committee
of the
IEEE Power Engineering Society

Approved December 12, 1987
IEEE Standards Board

© Copyright 1988 by
The Institute of Electrical and Electronics Engineers, Inc
345 East 47th Street, New York, NY 10017, USA
No part of this publication may be reproduced in any form, in an electronic retrieval system or otherwise, without the prior written permission of the publisher.

Copyright The Institute of Electrical and Electronics Engineers, Inc.
Provided by IHS under license with IEEE
No reproduction or networking permitted without license from IHS
Not for Resale

IEEE Standards documents are developed within the Technical Committees of the IEEE Societies and the Standards Coordinating Committees of the IEEE Standards Board. Members of the committees serve voluntarily and without compensation. They are not necessarily members of the Institute. The standards developed within IEEE represent a consensus of the broad expertise on the subject within the Institute as well as those activities outside of IEEE which have expressed an interest in participating in the development of the standard.

Use of an IEEE Standard is wholly voluntary. The existence of an IEEE Standard does not imply that there are no other ways to produce, test, measure, purchase, market, or provide other goods and services related to the scope of the IEEE Standard. Furthermore, the viewpoint expressed at the time a standard is approved and issued is subject to change brought about through developments in the state of the art and comments received from users of the standard. Every IEEE Standard is subjected to review at least once every five years for revision or reaffirmation. When a document is more than five years old, and has not been reaffirmed, it is reasonable to conclude that its contents, although still of some value, do not wholly reflect the present state of the art. Users are cautioned to check to determine that they have the latest edition of any IEEE Standard.

Comments for revision of IEEE Standards are welcome from any interested party, regardless of membership affiliation with IEEE. Suggestions for changes in documents should be in the form of a proposed change of text, together with appropriate supporting comments.

Interpretations: Occasionally questions may arise regarding the meaning of portions of standards as they relate to specific applications. When the need for interpretations is brought to the attention of IEEE, the Institute will initiate action to prepare appropriate responses. Since IEEE Standards represent a consensus of all concerned interests, it is important to ensure that any interpretation has also received the concurrence of a balance of interests. For this reason IEEE and the members of its technical committees are not able to provide an instant response to interpretation requests except in those cases where the matter has previously received formal consideration.

Comments on standards and requests for interpretations should be addressed to:

Secretary, IEEE Standards Board
345 East 47th Street
New York, NY 10017
USA

IEEE Standards documents are adopted by the Institute of Electrical and Electronics Engineers without regard to whether their adoption may involve patents on articles, materials, or processes. Such adoption does not assume any liability to any patent owner, nor does it assume any obligation whatever to parties adopting the standards documents.

--`,,`-`-`,,`,,`,`,,`---

Copyright The Institute of Electrical and Electronics Engineers, Inc.
Provided by IHS under license with IEEE
No reproduction or networking permitted without license from IHS

Not for Resale

Foreword

(This Foreword is not a part of IEEE C62.31-1987, IEEE Standard Test Specifications for Gas-Tube Surge-Protective Devices.)

The gas-tube surge-protective device is a gap-type overvoltage limiter for use on communications, power, or signaling circuits. It has been used in one form or another for many years.

With the trend to electrically vulnerable electronic apparatus that is exposed to surges from the environment, interest in gas-tube surge-protective devices has grown. Initially there were no standard terms to define these devices or standard tests to compare them. In an effort to address this situation, the IEEE Surge-Protective Devices Committee formed its Low-Voltage Surge-Protective Devices Working Group in 1970, which prepared the first edition of this standard. The diverse requirements, experiences, and vocabularies of representatives from many fields, including communications, power utilities, electronics manufacturers, and producers of gas tubes were melded in the standard. In 1981 the Low-Voltage Gap Type Protective Devices Working Group was formed to carry on this work, and reissued the standard in 1984.

A series of round-robin tests were conducted by members of the working group using the 1984 version of the standard. This series of tests indicated the need for improvements to serveral test specifications. These improvements, as well as many editorial revisions, are incorporated in this issue of the standard.

At the time this standard was published it was under consideration for approval as an American National Standard. The American National Standards Committee C62 on Surge Arresters had the following members at the time this document was sent to letter ballot.

J. L. Koepfinger, *Chair*
John A. Gauthier, *Secretary*

Organization Represented	***Name of Representative***
Association of American Railroads	R.W.McKnight
Bonneville Power Administration	E.J.Yasuda
Rural Electrification Administration	George J.Bagnall
Electric Light and Power	R.A. Jones
	W.R. Ossman
	J.W. Wilson
	T.A. Boudreau
	D.E. Soffrin
Institute of Electrical and Electronics Engineers	Dale Hedman
	S.S. Kershaw,Jr
	G.L. Gaibrois
	J.J. Keane *(Alt)*
Exchange Telephone Standards Association	L.H. Sessler, Jr
	M. Parente
Underwriters Laboratories	P. Notarian
	R.W. Seelback *(Alt)*
National Elecrrical Manufacturing Association	Scott Law
	Dennis W. Lenk
	Andrew Sweetana
	Bernhard Wolf

Copyright The Institute of Electrical and Electronics Engineers, Inc.
Provided by IHS under license with IEEE
No reproduction or networking permitted without license from IHS
Not for Resale

Organization Represented	*Name of Representative*
	Basil Dillon-Malone
	Mike Comber *(Alt)*
Canadian Standards Association	D.M. Smith
Members-at-Large	J. Osterhout
	F.D. Martzloff

At the time this standard was approved, the Low-Voltage Gap Type Protective Devices Working Group had the following membership:

C.D. Hansell, *Chair*
M. Parente, *Secretary*

S.C. Bartolutti	E. Grabowski	J. J. Napiorkowski
J. Boy	W. W. Hines	S. A. Potocny
J. M. Cawley	W. H. Kapp	P. Richman
G. Clarke	E. H. Marrow, Jr	

Others who contributed to this standard include:

L. Coffey	L. D. Sweeney	D.M. Worden
K. G. Cook	R. Traube	
R. Prieto	P. Winch	

At the time this standard was approved, the Low-Voltage Surge Protective Devices Subcommittee had the following membership:

E.H. Marrow, Jr, *Secretary*
F.D. Martzloff, *Secretary*

J.Cawley	R. Odenberg	L.D. Sweeney
P.M. Garcia	W.R. Ossman	M. Tetreault
P.A. Goodwin	M. Parente	L. Williams
C.D. Hansell	S.A. Potocny	B.I. Wolff
D.W. Hutchins	G.D. Rensner	G. Zappe
J.L. Koepfinger	P. Richman	T.D. Zimmermann
J.J. Napiorkowski	P.D. Speranza	

At the time this standard was approved, the Surge-Protective Devices Committee had the following membership:

R.T. Ball, *Chair*
E.J. Cohen, *Secretary*
J.A. Hetrick, *Vice Chair*

L.S. Baker	R.W. Flugum	J.A. Hetrick
C.L. Ballentine	H.E. Foelker	A.R. Hileman
F.G. Berg	G.L. Gaibrois	W.W. Hines
R.G. Black	E.A. Goodman	M Hirakami
G.C. Breuer	C.D. Hansell	D.W. Jackson
J.J. Burke	G.S. Haralampu	S.S. Kershaw
D.C. Dawson	D.E. Hedman	J.L. Koepfinger

Copyright The Institute of Electrical and Electronics Engineers, Inc.
Provided by IHS under license with IEEE
No reproduction or networking permitted without license from IHS
Not for Resale

F. Lembo
D.W. Lenk
J.A. Mambuca
E.H. Marrow, Jr
F.D. Martzloff
D.J. Melvold
J.J. Napiorkowski
O. Nigol
R. Odenburg
W.R. Ossman
J.C. Osterhout
M. Parente
S.A. Potocny
P. Richman
P.D. Speranza
K.B. Stump
A. Sweetana
E.R. Taylor, Jr
A.C. Westrom
S.G. Whisenant
E.J. Yasuda

The following persons were on the balloting committee that approved this document for submission to the IEEE Standards Board:

R.D. Ball
C.L. Ballentine
F.G. Berg
R.G. Black
G.D.Breuer
J.J. Burke
D.C.Dawson
R.W.Flugum
H.E.Foelker
G.L. Gaibrois
E.A. Goodman
C.D. Hansell
G.S. Haralampu
D.E. Hedman
J. A. Hetrick
A.R.Hileman
W.W. Hines
D.W. Jackson
S.S. Kershaw
J.L. Koepfinger
F. Lembo, Jr
D.W. Lenk
J.A. Mambuca
E.H. Marrow
F.D. Martzloff
D.J. Melvoid
J.J. Napiorkowski
O. Nigol
R. Odenberg
W.R. Ossman
J.C. Osterhout
M. Parente
S.A. Potocny
P. Richman
P.D. Speranza
K.B Stump
A. Sweetana
E.R. Taylor
A.C. Westrom
S.G. Whisenant
E.J. Yasuda

When the IEEE Standards Board approved this standard on December 10, 1987, it had the following membership:

Donald C. Fleckenstein, *Chair*
Marco W. Migliaro, *Vice Chair*
Andrew G. Salem, *Secretary*

James H. Beall
Dennis Bodson
Marshall L. Cain
James M. Daly
Stephen R. Dillon
Eugene P. Fogarty
Jay Forster
Kenneth D. Hendrix
Irvin N. Howell
Leslie R. Kerr
Jack Kinn
Irving Kolodny
Joseph L. Koepfinger*
Edward Lohse
John May
Lawrence V. McCall
L. Bruce McClung
Donald T. Michael*
L. John Rankine
John P. Riganati
Gary S. Robinson
Frank L. Rose
Robert E.Rountree
William R. Tackaberry
William B Wilkins
Helen M. Wood

*Member Emeritus

--`,,`-`-`,,`,,`,`,,`---

Copyright The Institute of Electrical and Electronics Engineers, Inc.
Provided by IHS under license with IEEE
No reproduction or networking permitted without license from IHS
Not for Resale

CLAUSE PAGE

1. Scope 1

1.1 1
1.2 1
1.3 1
1.4 1
1.5 2

2. Definitions 2

3. Service Conditions 3

3.1 Standard Service Conditions 3
3.2 Nonstandard Service Conditions 4
3.3 Radiation 4

4. Standard Design Test Criteria 4

4.1 DC Breakdown Voltage Test 5
4.2 Capacitance Test 5
4.3 Insulation Resistance Test 6
4.4 Impulse Breakdown Voltage Test 6
4.5 Maximum Single Impulse Discharge Current Test 8
4.6 Impulse Life Test 8
4.7 AC Discharge Current Test 9
4.8 Alternating Follow-Current Test 10
4.9 DC Holdover Test for Two-Electrode Devices 10
4.10 DC Holdover Test for Three-Electrode Devices 11
4.11 Transition Time Test 13
4.12 Impulse Transverse Voltage Test 14
4.13 AC Transverse Voltage Test 14
4.14 Voltampere Characteristic Test 16
4.15 Crosstalk Test 16
4.16 Failure Modes 16
4.17 Backup Air-Gap Devices 17

Copyright The Institute of Electrical and Electronics Engineers, Inc.
Provided by IHS under license with IEEE
No reproduction or networking permitted without license from IHS Not for Resale

IEEE Standard Test Specifications for Gas-Tube Surge-Protective Devices

1. Scope

1.1

This standard applies to gas-tube surge-protective devices for application on systems with voltages ≤ 1000 V rms or 1200 V dc. These protective devices are designed to limit voltage surges on balanced or unbalanced communication circuits and on power circuits operating from dc to 420 Hz. This standard contains a series of standard test criteria for determining the electrical characteristics of these gas-tube surge-protective devices.

1.2

The tests in this standard are intended as design tests as defined under design tests in ANSI/IEEE Std 100-1988, IEEE Standard Dictionary of Electrical and Electronics Terms,[1] and provide a means of comparison among various gas-tube surge-protective devices.[2]

1.3

Gas-tube devices are used to provide over-voltage protection in electrical circuits. When the breakdown voltage of the gas tube is exceeded, the normal high-impedance state of the tube changes to a low-impedance state to allow the gas tube to conduct the surge discharge current. After the tube conducts the surge discharge current, it interrupts the flow of power follow current and returns to its high-impedance state.

1.4

The test criteria and definitions of this standard provide a common engineering language beneficial to the user and manufacturer of gas-tube surge-protective devices.

[1]ANSI/IEEE publications are available from IEEE Service Center, 445 Hoes Lane, PO Box 1331, Piscataway, NJ 08855-1331, or from the Sales Department, American National Standards Institute, 1430 Broadway, New York, NY 10018.

[2]In this standard, the term *arrester* is used when the definition of gas-tube surge arrester (see Section 2.) is intended, and the term *protector* is used when the definition of surge protector (see Section 2.) is intended. When a test applies to both protectors and arresters the term *device* or *gas-tube device* is used alone. For the purpose of this standard, all connections to a device are by means of the terminals.

Copyright The Institute of Electrical and Electronics Engineers, Inc.
Provided by IHS under license with IEEE
No reproduction or networking permitted without license from IHS
Not for Resale

1.5

Due to the voltage and energy levels employed in the majority of tests contained herein, all measurements should be considered dangerous, and appropriate caution should be taken in their performance.

2. Definitions

The following definitions apply specifically to gas-tube surge-protective devices and do not necessarily cover other applications.

arc current. The current that flows after breakdown when the circuit impedance allows a current that exceeds the glow-to-arc transition current. Sometimes called **arc mode current.**

arc voltage. The voltage drop across the arrester during arc current flow. Sometimes called **arc mode voltage.**

backup air-gap device. An air-gap device connected in parallel with a sealed gas-tube device, having a higher breakdown voltage than the gas tube, which provides a secondary means of protection in the event of a venting to atmosphere by the primary gas-tube device.

breakdown. The abrupt transition of the gap resistance from a practically infinite value to a relatively low value. In the case of a gap, this is sometimes referred to as **sparkover** or ignition. *See***: sparkover**.

breakdown voltage, ac. The minimum rms value of a sinusoidal voltage at frequencies between 15 Hz and 62 Hz that results in arrester sparkover.

breakdown voltage, dc. The minimum slowly rising dc voltage that causes breakdown or sparkover when applied across the terminals of an arrester.

current turnoff time. The time required for the arrester to restore itself to a nonconducting state following a period of conduction. This applies only to a condition where the arrester is exposed to a continuous specified dc potential under a specified circuit condition.

dc holdover. In applications where dc voltage exists on a line, a holdover condition is one in which a surge-protective device continues to conduct after it is subjected to an impulse large enough to cause breakdown. Factors that affect the time required to recover from the conducting state include the dc voltage and the dc current.

dc holdover voltage. The maximum dc voltage across the terminals of an arrester under which it may be expected to clear and to return to the high-impedance state after the passage of a surge, under specified circuit conditions.

discharge current. The current that flows through an arrester when sparkover occurs.

discharge voltage. The voltage that appears across the terminals of an arrester during the passage of discharge current.

discharge-voltage-current characteristic. The variation of the crest values of discharge voltage with respect to discharge current.

follow current. The current from the connected power source that flows through an arrester during and following the passage of discharge current.

gas-tube surge arrester. A gap, or gaps, in an enclosed discharge medium, other than air at atmospheric pressure, designed to protect apparatus or personnel, or both, from high transient voltages.

--`,,-`-`,,`,,`,`,,`---
Copyright © 1988 IEEE All Rights Reserved

Copyright The Institute of Electrical and Electronics Engineers, Inc.
Provided by IHS under license with IEEE
No reproduction or networking permitted without license from IHS
Not for Resale

glow current. The current that flows after breakdown when circuit impedance limits the follow current to a value less than the glow-to-arc transition current. It is sometimes called the **glow mode current**.

glow-to-arc transition current. The current required for the arrester to pass from the glow mode into the arc mode.

glow voltage. The voltage drop across the arrester during glow-current flow. It is sometimes called the **glow mode voltage**.

impulse sparkover voltage. The highest value of voltage attained by an impulse of a designated wave shape and polarity applied across the terminals of an arrester prior to the flow of discharge current. Sometimes referred to as **surge** or **impulse breakdown voltage**.

impulse sparkover voltage-time curve (arrester). A curve that relates the impulse sparkover voltage to the time to sparkover.

longitudinal (common) mode voltage. The voltage common to all conductors of a group as measured between that group at a given location and an arbitrary reference (usually earth).

short circuit. An abnormal connection of relatively low impedance, whether made accidentally or intentionally, between two points of different potential in a circuit.

sparkover. A disruptive discharge between electrodes of a measuring gap, voltage control gap, or protective device.

surge protector. A protective device, consisting of one or more surge arresters, a mounting assembly, optional fuses and short-circuiting devices, etc, which is used for limiting surge voltages on low-voltage (≤1000 V rms or 1200 V dc) electrical and electronic equipment or circuits.

transfer time. The time duration of the transverse voltage.

transition time. The time required for the voltage across a conducting gap to drop into the arc region after the gap initially begins to conduct.

transverse (differential) mode voltage. The voltage at a given location between two conductors of a group.

3. Service Conditions

3.1 Standard Service Conditions

Arresters and protectors conforming to this standard shall be capable of successful operation under the following conditions, which shall be specified by the manufacturer or user, as appropriate.

3.1.1 Physical Conditions

1) Operating temperature range
2) Atmospheric pressure range
3) Humidity conditions
4) Mechanical-shock conditions

3.1.2 System Conditions

1) Nominal power, signal, or communications system frequencies, or direct current

Copyright © 1988 IEEE All Rights Reserved

--`,,`-`-`,,`,,`,`,,`---
Copyright The Institute of Electrical and Electronics Engineers, Inc.
Provided by IHS under license with IEEE
No reproduction or networking permitted without license from IHS Not for Resale

2) System voltage and fault current within the ratings of the devices under all system operating conditions

3.2 Nonstandard Service Conditions

The following service conditions may require special consideration in the design or application of gas-tube devices and should be called to the attention of the manufacturer.

3.2.1 Physical Conditions

1) Exposure to
   a) Damaging fumes or vapors
   b) Excessive dirt or current-conducting dripping water, steam, or salt spray; explosive atmospheres; abnormal vibrations or shocks
2) Limitation on weight or space, including clearances to nearby conducting objects, particularly at altitudes exceeding those specified by the manufacturer
3) Unusual transportation or storage conditions

3.2.2 System Conditions

1) System voltage, current, or frequency resulting in operating conditions whereby the ratings of the devices are exceeded
2) System fault currents not within the rating of the device
3) Exposure to direct lightning strikes
4) Any other unusual conditions known to the user

3.3 Radiation

Some devices may contain radioactive material. Manufacturers of such devices must mark them in accordance with national regulations.

4. Standard Design Test Criteria

The design tests described in 4.1 through 4.17 provide standardized methods for making single observations of a specified property of a gas-tube surge-protective device. These properties usually vary from measurement to measurement, making it necessary to provide statistical descriptions of the property so as to compare products.

The following statistical procedure shall be used to describe any property that has been determined to have important statistical aspects. A product sample shall be chosen in a manner consistent with the definition of design tests as provided by ANSI/IEEE Std 100-1988. A sufficient number of devices shall be tested and the characteristic in question measured as described in the applicable design test until the parameters of the underlying statistical distribution are determined within confidence limits specified by the manufacturer or user. Values relating to the product sample such as, but not limited to, mean, median, maximum, minimum, and standard deviation may then be stated.

The following tests shall be performed on the device as required by the application. Unless otherwise specified, ambient test conditions shall be as follows:

1) Temperature: 25 °C ± 5 °C
2) Relative humidity: less than 60%
3) Atmospheric pressure: 60 cm to 78 cm of mercury

Copyright © 1988 IEEE All Rights Reserved

Copyright The Institute of Electrical and Electronics Engineers, Inc.
Provided by IHS under license with IEEE
No reproduction or networking permitted without license from IHS Not for Resale

4.1 DC Breakdown Voltage Test

A device shall be placed in darkness for at least 24 h and tested in this condition using a ramp voltage waveform, with a specified voltage rate of rise employing a suitable circuit such as that shown in Fig 1. The device shall be tested with a positive and a negative waveform, or a waveform of specified polarity, with a minimum of 24 h between tests. The breakdown values shall be recorded.

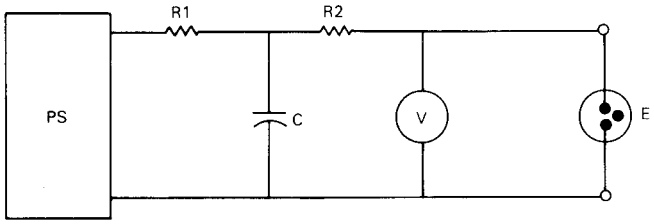

PS = variable voltage power supply. Rated load ripple and output regulation shall be ≤ 3.0% under full power
R1 = 50 kΩ charging current-limiting resistor
C = 1.0 μF dc charging capacitor (nonelectrolytic)
R2 = discharge current-limiting resistor (10 Ω)
V = voltmeter or oscilloscope for observing dc breakdown voltage
E = gas-tube arrester test specimen

NOTE: Values in parentheses are recommended in the absence of special requirements.

Figure 1— Circuit for DC Breakdown Voltage Test

NOTES:

1 — Unless otherwise specified, a rate of rise not to exceed 2000 V/s is recommended.

2 — A crowbar circuit is usually applied to terminate the dc breakdown voltage test, thereby minimizing energy dissipated by the device. The method of applying the crowbar may affect results of the test.

4.1.1

Separate tests shall be performed to determine dc breakdown voltage repeatability employing the ramp waveform described in 4.1. A series of at least five voltage impulses of a given polarity followed by at least five voltage impulses of the opposite polarity shall be consecutively applied at intervals of less than 1 min.

4.1.2

Each pair of terminals of a multigap device shall be tested separately in accordance with 4.1 and 4.1.1 with the other terminal or terminals floating, unless otherwise specified.

4.2 Capacitance Test

The capacitance shall be measured between each terminal and every other terminal of the device at a specified frequency. In measurements involving multi-gap devices, a three-terminal measuring instrument is required. All terminals not involved in the test shall be connected to a ground plane in the measuring instrument.

Copyright © 1988 IEEE All Rights Reserved

Copyright The Institute of Electrical and Electronics Engineers, Inc.
Provided by IHS under license with IEEE
No reproduction or networking permitted without license from IHS
Not for Resale

NOTE — In the absence of requirements relating to a special application, a frequency of 1.0 MHz is recommended for this test.

4.3 Insulation Resistance Test

The insulation resistance shall be measured from each terminal to every other terminal of the device, applying a specified dc voltage as described in Fig 2. The specified dc voltage shall be reached and held for at least 100 ms (T2 = minimum 101 ms in Fig 2), before the insulation resistance measurement is taken; also, it shall be taken before a holding time of 10 s has elapsed (T3 = maximum 10.001 s in Fig 2). Terminals not involved in the measurement shall be left floating.

NOTES:

1 — In the absence of requirements relating to special applications, 100 V dc ± 5% is suggested for testing devices with a dc breakdown voltage of 230 V or more and 50 V dc ± 5% for devices with a dc breakdown voltage below 23O V.

2 — Insulation-resistance test results may be affected by the short-circuit current of the test circuit. In the absence of requirements relating to special applications, the short-circuit current should be in the range of 8 mA–10 mA.

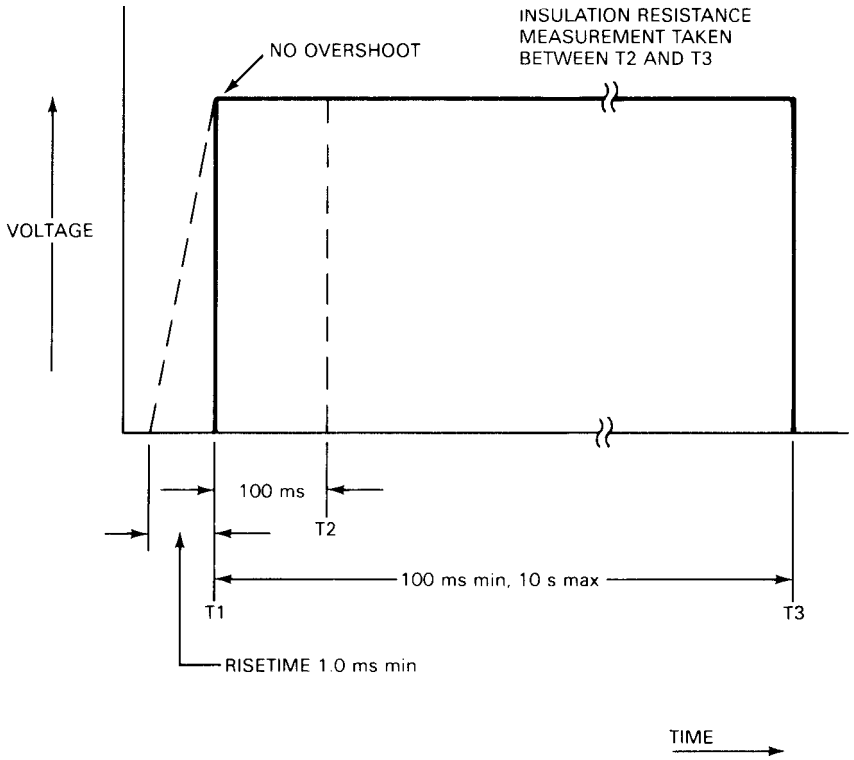

Figure 2— Voltage Applied During Insulation Resistance Test

4.4 Impulse Breakdown Voltage Test

The purpose of this test is to determine the impulse breakdown voltage of a gas-tube protector or arrester and to establish an impulse breakdown voltage-time curve of the device. The voltage generator used for this test must be capable of maintaining the waveform specified in Fig 3. Since the intent of this test is the measurement of impulse breakdown voltage on the front of the wave, the tail of the impulse wave is unspecified.

Copyright © 1988 IEEE All Rights Reserved

Copyright The Institute of Electrical and Electronics Engineers, Inc.
Provided by IHS under license with IEEE
No reproduction or networking permitted without license from IHS
Not for Resale

4.4.1

The device to be exposed to the test shall be kept in total darkness before (for at least 15 min) and during the test. Then, with a specified polarity and a ramp voltage with a specified rate of rise applied to the device, record the breakdown voltage level. To repeat the test with opposite polarity, using the same device, a minimum of 15 min shall elapse.

4.4.2

Discharge current should be sufficient to cause operation in the arc mode. However, operation in the glow mode during the transition into and out of the arc mode shall be permissible. Discharge current amplitude and duration should not be so high as to significantly affect repeatability of the impulse breakdown voltage test, or to consume a significant portion of device life during an impulse life test.

NOTE — In the absence of specific requirements, discharge current should be in the range of 1 A–10 A but in any case it should be sufficient to cause operation in the arc mode. Duration of discharge current after breakdown should be as short as practicable, preferably less than 10 μs measured from 50% of peak on the leading edge to 50% of peak on the trailing edge.

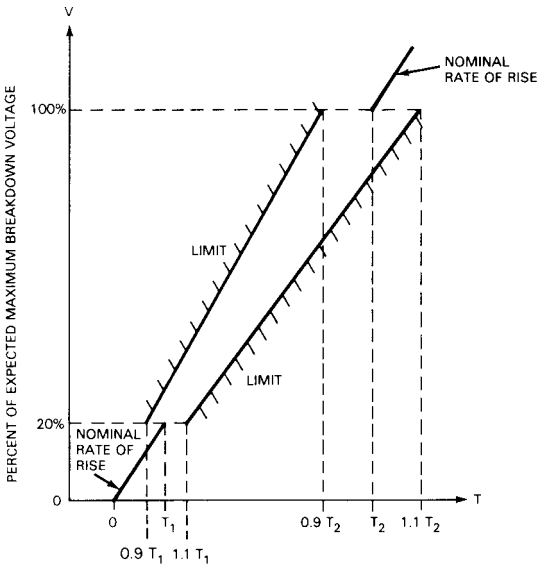

NOTE: Impulse breakdown test waveform (nonconducting) must be within enclosed limits.

Figure 3— Impulse Breakdown Test Waveform

4.4.3

Separate tests shall be performed to determine the repeatability of impulse breakdown voltage. The rate of rise, crest current, and decay time to half crest shall be specified. A minimum of five impulses of each polarity shall be applied at intervals of not greater than 1 min, and the breakdown voltage for each impulse shall be recorded. An additional test may be performed employing at least two applications of the impulse separated by a period greater than 24 h. Separate samples shall be employed for each of the two tests and for each rate of rise.

NOTE — In the absence of special requirements, the rates of rise should be one or more of 100 V/μs, 500 V/μs, 1 kV/μs, 5 kV/μs, and 10 kV/μs.

Copyright © 1988 IEEE All Rights Reserved

Copyright The Institute of Electrical and Electronics Engineers, Inc.
Provided by IHS under license with IEEE
No reproduction or networking permitted without license from IHS
Not for Resale

4.4.4

Each pair of terminals of a multigap device shall be tested separately in accordance with 4.4 through 4.4.3 with the other terminal or terminals floating unless otherwise specified.

4.4.5

When the device is to be employed for protection against high altitude nuclear electromagnetic pulse (HEMP), additional tests shall be conducted at 100 kV/μs and other rates of rise as required.

4.5 Maximum Single Impulse Discharge Current Test

The purpose of this test is to determine the ability of a device to conduct a maximum single impulse discharge current, regardless of polarity, from its line terminal to the common terminal and not fail in any of the modes described in 4.16.

4.5.1

The current impulse waveform may be 8/20 μs or 10/1000 μs, or both. The maximum single impulse discharge current is the peak current of the impulse. Different samples shall be tested for each polarity or wave shape. For applications with backup air gaps, see 4.17.

4.5.2

For multigap devices, independent maximum single impulse discharge currents of the same polarity shall be discharged simultaneously through all gaps to the common electrode.

4.6 Impulse Life Test

Tests shall be conducted on devices to establish a current-life characteristic based on the number of discharges to failure. Separate samples shall be used for each current level and each polarity tested.

4.6.1

The impulse shall be determined by either of two methods

1) The impulse discharge current and wave shape shall be measured with the device in the circuit to ensure that the arc voltage does not affect the specified wave shape or crest current appreciably.
2) The impulse discharge current and wave shape shall be measured with the device replaced by a short circuit, and the open-circuit source voltage shall exceed the maximum impulse breakdown voltage of the device by not less than 50%.

4.6.2

For applications with backup air gaps, see 4.17.

4.6.3

For multigap devices, independent impulse life test currents of the same polarity shall be discharged simultaneously through all gaps to the common electrode.

Copyright © 1988 IEEE All Rights Reserved

Copyright The Institute of Electrical and Electronics Engineers, Inc.
Provided by IHS under license with IEEE
No reproduction or networking permitted without license from IHS Not for Resale

4.6.4

Failure criteria for this test are defined in 4.16. The applicable failure-criteria tests shall be performed after each impulse discharge. During the impulse life test, the waiting period between breakdown voltage tests need not apply.

Table 1— Suggested Impulse Life Test Levels

Current (±5%) (A)	Maximum Time Between Surges (minutes)	Wave Shape (μs)
10	2	10/1000
50	2	10/1000
100	2	10/1000
300	2	10/1000
500	2	10/1000
5000	2	8/20
20000	5	8/20

NOTES:

1 — In the absence of special requirements, it is recommended that insulation resistance, plus or minus dc breakdown voltage, and plus or minus impulse breakdown voltage shall be measured after each life test surge, in that order.

2 — In the absence of special requirements, it is suggested that test current levels be selected from Table 1.

4.7 AC Discharge Current Test

The device shall, for a period of time, pass 50 Hz or 60 Hz discharge current, which may be created by direct contact with a power line or by induction from a nearby power line. Many protectors contain mechanisms internal or external to the arrester, or both, that conduct the alternating current when the conducting capacity of the arrester has been exceeded. The purpose of this test is to determine the period of time for which protectors can conduct alternating current without activation of the safety mechanisms for various current levels. Permanent activation of these mechanisms shall be considered a failure mode.

4.7.1

The crest ac voltage of the source shall exceed the maximum dc breakdown voltage of the device by not less than 50%.

From the test data gathered, a root-mean-square (rms) ac load or discharge characteristic may be plotted (rms current versus time). For applications with backup air gaps, see 4.17.

4.7.2

For multigap devices, independent ac discharge currents shall be discharged simultaneously through all gaps to the common electrode.

4.7.3

Failure criteria for this test are defined in 4.16.1 and 4.16.3 (dc breakdown only).

Copyright © 1988 IEEE All Rights Reserved

Copyright The Institute of Electrical and Electronics Engineers, Inc.
Provided by IHS under license with IEEE
No reproduction or networking permitted without license from IHS Not for Resale

4.8 Alternating Follow-Current Test

Apply an ac source, 50 Hz or 60 Hz, with an open-circuit rms ac voltage of 25 V, 120 V, 208 V, 240 V, or 480 V (to be stated) as shown in Fig 4. The power frequency source current shall be resistance-limited to approximate unity power-factor conditions. This ac source shall have the capability to provide a follow current when conduction is initiated within the arrester by a secondary source of impulse current applied at thirty electrical degrees or less after the zero value of the ac source. The impulse current shall be unidirectional and of the same polarity as the applied half cycle of the ac source. The impulse should be of sufficient amplitude and time duration to ensure that the device is put into the arc mode conducting state. The maximum current, which the device will extinguish without failure, defines the maximum alternating follow-current capability. For applications with backup air gaps, see 4.17.

NOTE — In the absence of special requirements, it is recommended that the device be required to extinguish not later than thirty electrical degrees after the first alternating current zero without failure, as specified in 4.16, and that subsequent breakdown does not occur.

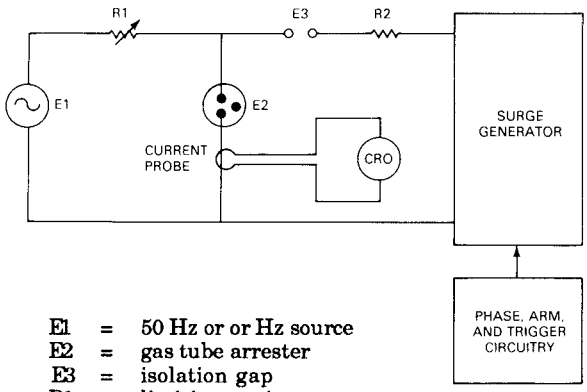

E1 = 50 Hz or or Hz source
E2 = gas tube arrester
E3 = isolation gap
R1 = limiting resistor
R2 = isolation resistor
CRO = cathode ray oscilloscope

NOTES: (1) Reactance of 50 Hz or 60 Hz source << R1.
(2) R2 must be sufficiently large to cause prompt extinguishing of the isolation gap.
(3) Surge protection of the 50 HZ or 60 Hz supply may be necessary.

Figure 4— Circuit for Alternating Follow-Current Test

4.9 DC Holdover Test for Two-Electrode Devices

This test shall establish the maximum values of direct current for a given open-circuit dc voltage and specified circuit conditions that the device can extinguish. When the device is subjected to an impulse sufficient to cause the voltage across the gap of the device to drop into the arc voltage mode, the arrester is expected to return to its high impedance state after it has conducted the impulse current.

4.9.1

The current impulse that is applied to the gap of the arrester shall be a 100 A, 10/1000 μs wave of the same polarity as the dc source. Three impulses shall be applied at not greater than 1 min intervals. These tests will be repeated with the test specimen connections reversed.

Copyright © 1988 IEEE All Rights Reserved

Copyright The Institute of Electrical and Electronics Engineers, Inc.
Provided by IHS under license with IEEE
No reproduction or networking permitted without license from IHS
Not for Resale

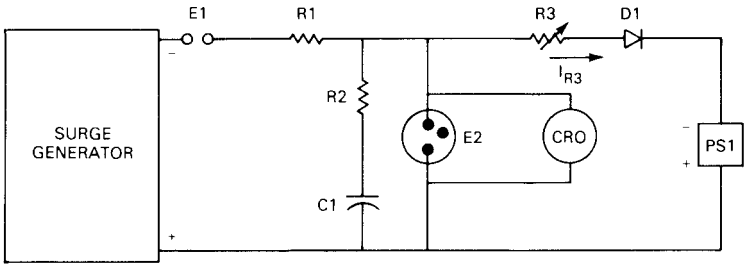

PS1 = constant voltage dc supply or battery (transient free ± 1 % for unit impulse currents from zero to full load and from full load to zero)
E1 = isolation gap or equivalent device
E2 = gas-tube arrester
C1 = optional capactor for simulating application conditions (0.083 μF)*
R1 = impulse limiting resistor or wave-shaping network
R2 = optional resistor for simulating circuit resistance (136 Ω)*
R3 = direct current limiting resistor
CRO = oscilloscope for observing gas-tube voltage breakdown or extinguishing time
I_{R3} = direct current through R3 with E2 short-circuited
D1 = diode

*Tests may be performed with R2 and C1 deleted from the circuit, or as specified by the user.

NOTE: Values in parentheses are recommended in the absence of special requirements

Figure 5— Circuit for DC Holdover Test of Two-Electrode Devices

4.9.2

Tests shall be conducted, using the circuit shown in Fig 5, with the dc voltage PS1 fixed at a value to be stated. Resistor R3, in the circuit, shall be decreased from values for which no holdover is observed until holdover occurs for greater than a stated period; current I_{R3} shall be stated for this condition. For applications with backup air gaps, see 4.17.

NOTE — In the absence of special requirements, it is recommended that tests be conducted with the dc voltage PS1 fixed at 50 V or 150 V, or beth (to be stated), and that a maximum time for current turnoff of 150 ms be employed.

4.10 DC Holdover Test for Three-Electrode Devices

This test shall establish the maximum values of direct current for a given open-circuit dc voltage and specified circuit conditions that the device can extinguish. When the device is subjected to an impulse sufficient to cause the voltage across the gaps of the arrester to go into the arc voltage mode, the arrester is expected to return to its high impedance state after it has conducted the impulse current.

Copyright © 1988 IEEE All Rights Reserved

Copyright The Institute of Electrical and Electronics Engineers, Inc.
Provided by IHS under license with IEEE
No reproduction or networking permitted without license from IHS
Not for Resale

4.10.1

The simultaneous impulse currents that are applied to the gaps of the arrester shall be 100 A, 10/1000 μs waves. Three impulses shall be applied at not greater than 1 min intervals.

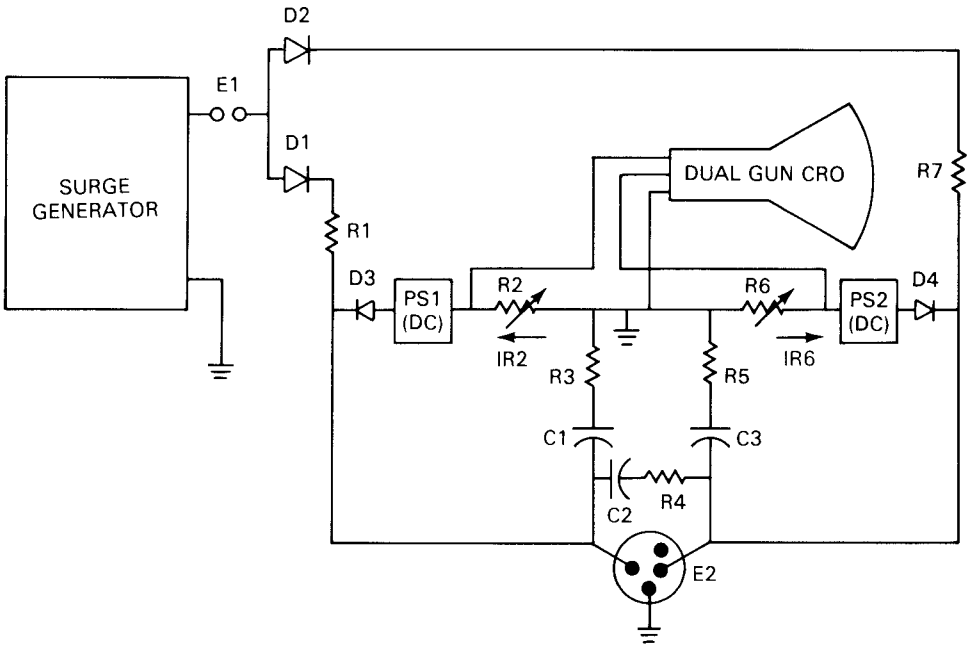

C1, C3 = optional capacitor for simulating application conditions (0.083 μF)
C2 = optional capacitor for simulating application conditions (0.043 μF)
D1, D2, D3, D4 = diode (appropriately polarized)
E1 = isolation gap or equivalent device
E2 = gas tube
IR2 = direct current through R2 with E2 short-circuited
IR6 = direct current through R6 with E2 short-circuited
PS1, PS2 = batteries or dc power supplies (appropriately polarized, transient free ± 1% for unit impulse currents from zero to full load and from full load to zero)
R1, R7 = impulse current limiting resistor or wave-shaping network
R2, R6 = battery current limiting resistor
R3, R5 = optional resistor for simulating application conditions (136 Ω)
R4 = optional resistor for simulating application conditions (272 Ω)

NOTES: (1) The impulse generator may supply independent simultaneous impulses to each electrode common to the ground electrode of the multi-element gas tube.
(2) Values in parenthes are recommended in the absence of special requirements.

Figure 6— Circuit for DC Holdover Test of Three-Electrode Devices

4.10.2

Tests shall be conducted, using the circuit shown in Fig 6, with the dc voltage (PS1, PS2, D3, and D4) equal and fixed at a stated value with the same or opposite polarity (to be stated) applied to the terminals of the device. Resistors R2 and R6, in the circuit, shall be decreased from values for which no holdover is observed until holdover just occurs for greater than a stated period. Currents IR2 and IR6 shall be stated for this condition. For applications with backup air gaps, see 4.17.

Copyright © 1988 IEEE All Rights Reserved

Copyright The Institute of Electrical and Electronics Engineers, Inc.
Provided by IHS under license with IEEE
No reproduction or networking permitted without license from IHS
Not for Resale

NOTE — In the absence of special requirements, it is recommended that tests be conducted with the dc voltage (PS1 and PS2) fixed at 50 V or 150 V, or both (to be stated), and that a maximum time for extinguishing of 150 ms be employed.

4.11 Transition Time Test

Transition time shall be measured in accordance with Figs 7 and 8. The waveform for this test shall be 10/1000 μs. The peak impulse voltage shall be at least two times the dc breakdown voltage. The peak impulse current shall be specified and shall be between 1.5 and 4 times the glow-to-arc transition current.

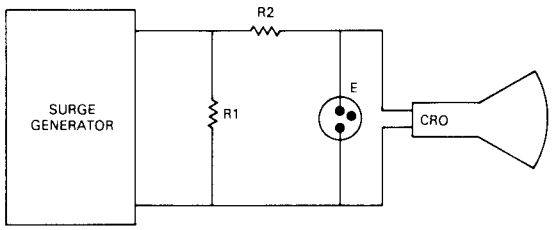

R1 = impulse-shaping resistor
R2 = impulse-shaping resistor and current-limiting resistor
CRO = oscilloscope for observing impulse transition time
E = gas-tube arrester test specimen

Figure 7— Circuit for Transition Time Test

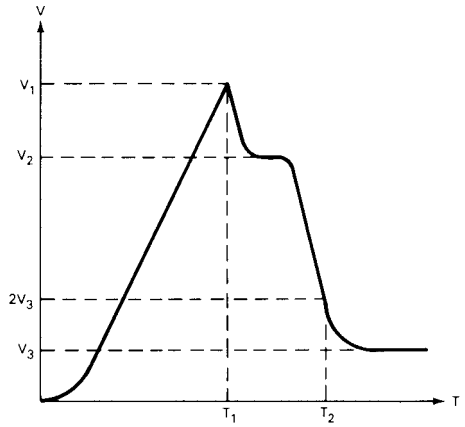

V_1 = breakdown voltage
V_2 = glow voltage
V_3 = arc voltage
$T_2 - T_1$ = transition time

NOTE: T_2 is to be taken at a point when the voltage is equal to twice V_3

Figure 8— Breakdown Waveform

Copyright © 1988 IEEE All Rights Reserved

Copyright The Institute of Electrical and Electronics Engineers, Inc.
Provided by IHS under license with IEEE
No reproduction or networking permitted without license from IHS
Not for Resale

4.12 Impulse Transverse Voltage Test

A transverse voltage occurs across a balanced-to-ground conductor pair when symmetrical or unsymmetrical longitudinally impressed voltages break down the gaps of an arrester that is connected to protect the insulation of the line to ground pair. The transverse voltage may also occur as the gaps return to their high-impedance state. It is the purpose of this test to determine the impulse transverse voltage.

4.12.1

The impulse generator for transient transverse voltage in Fig 9 shall be designed to generate a 10/1000 μs wave shape with a crest of 1500 V. The crest discharge current of the gas-tube device shall be a function of the applied crest voltage, the current limiting resistors as shown in Fig 9, and the inherent characteristics of the device under test.

4.12.2

The test plan in Fig 9 shall be performed. At each step, the transverse voltage shall be measured such that the transverse pulse shape can be established with respect to voltage amplitude and time duration. The area under the volt-time of the pulse will represent volt-seconds relating to current or energy through the protected termination. Devices shall be tested in both polarities to determine the effect of polarity on impulse transverse voltage.

NOTE — The characteristics of the specific system or circuit in which the device is applied may affect this electrical characteristic.

4.13 AC Transverse Voltage Test

An ac transverse voltage test shall be made from an ac source, timer-controlled to limit discharge current to 0.2 s, as shown in Fig 10. Current limiting resistors shall allow a peak current of 1.5 to 4 times the glow-to-arc transition current through each gap. The source shall have a peak voltage value of 1.5 to 4 times the dc breakdown voltage of the arrester. The maximum peak transverse voltage and the maximum volt-time area for any half cycle shall be recorded.

NOTE — The characteristics of the specific system or circuit in which the device is applied may affect this electrical characteristic of the device.

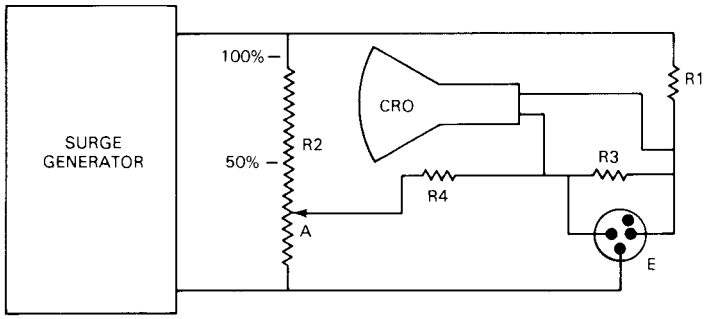

Test	R1, R4 (Ω)	A (Percent of R2)
1A	(50)	100
B *	(50)	50
2A	(800	100
2B	(800)	50

*Optional test

R1, R4 = current-limiting resistors
R2 = impulse wave-shaping resistor (≤20% of RI)
R3 = load resistance (600 Ω)
E = gas-tube arrester
CRO = oscilloscope for observing transient transverse voltage

NOTE: Values in parentheses are recommended in the absence of special requirements.

Figure 9— Circuit and Test Plan for Impulse Transverse Voltage Test

Copyright © 1988 IEEE All Rights Reserved

Copyright The Institute of Electrical and Electronics Engineers, Inc.
Provided by IHS under license with IEEE
No reproduction or networking permitted without license from IHS
Not for Resale

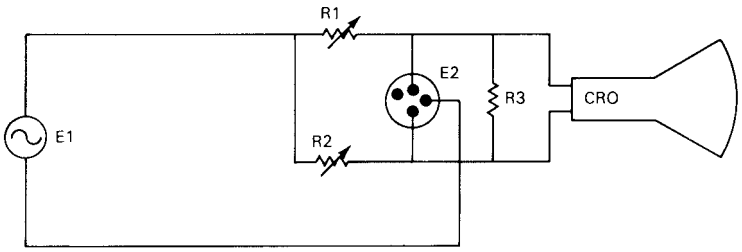

R1, R2 = current-limiting resistors
R3 = termination resistor (600 Ω)
CRO = oscilloscope for observing transverse voltage
E1 = 50 Hz or 60 Hz source
E2 = gas-tube arrester

NOTE: The value in parentheses is recommended in the absence of special requirements.

Figure 10— Circuit for AC Transverse Voltage Test

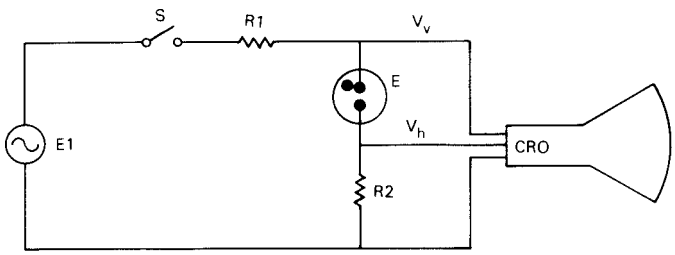

E1 = 50 Hz or 60 Hz source
S = switch
R1 = load-limiting resistor
R2 = current shunt
V_v = vertical deflection
V_h = horizontal deflection
CRO = oscilloscope for observing glow-arc characteristic
E = gas-tube arrester

Figure 11— Circuit for Voltampere Characteristic Test

Copyright © 1988 IEEE All Rights Reserved

Copyright The Institute of Electrical and Electronics Engineers, Inc.
Provided by IHS under license with IEEE
No reproduction or networking permitted without license from IHS
Not for Resale

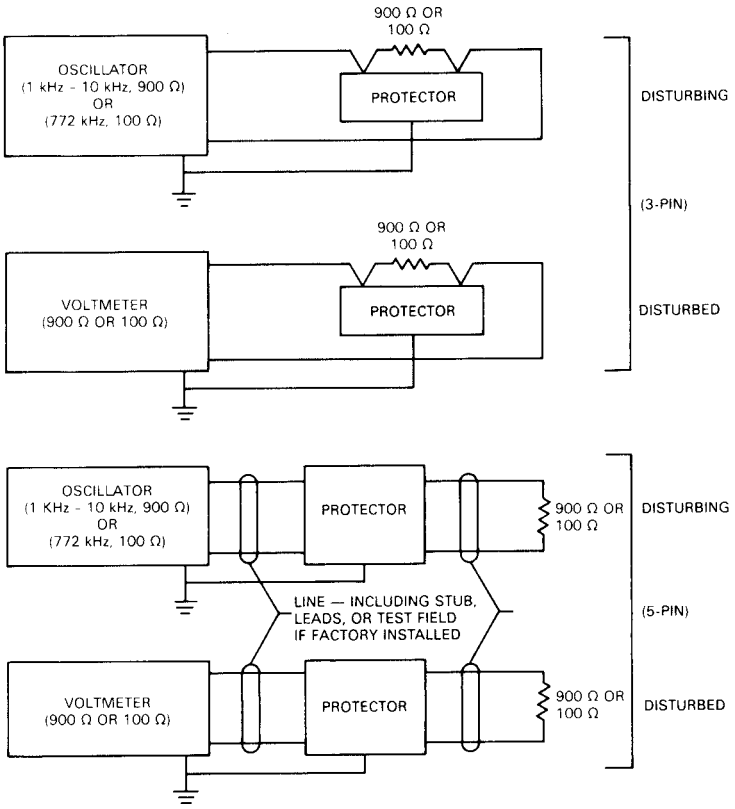

Figure 12— Circuit for Crosstalk Test

4.14 Voltampere Characteristic Test

A voltampere characteristic shall be derived illustrating nominal values of breakdown, glow voltage, and the glow-to-arc transition current in both polarities of the arrester. The circuit in Fig 11 shall be used for this test, limiting current to the lowest value necessary to define the glow-to-arc transition. The source shall provide a single cycle of 50 Hz or 60 Hz voltage, with a peak value at least 1.5 times the dc breakdown voltage.

4.15 Crosstalk Test

On multipair protector assemblies, the crosstalk loss between vertically and horizontally adjacent pairs shall be measured in the frequency band of 1 kHz to 10 kHz, using 900 Ω resistive terminations, and at 772 kHz, using 100 Ω resistive terminations. The test shall be performed as shown in Fig 12 with factory-installed leads, cable stubs, or test connector jack fields wired in place.

4.16 Failure Modes

In the absence of special requirements, the following criteria are suggested.

4.16.1 Short-Circuit Failure Mode

In this mode, the device has become permanently short circuited.

Copyright © 1988 IEEE All Rights Reserved

Copyright The Institute of Electrical and Electronics Engineers, Inc.
Provided by IHS under license with IEEE
No reproduction or networking permitted without license from IHS
Not for Resale

4.16.2 Low Breakdown Voltage Failure Mode

In this mode, a device has a dc breakdown voltage of less than a specified value.

4.16.3 High Breakdown Voltage Failure Mode

In this mode, a device has a dc or impulse breakdown voltage of greater than a specified value.

4.16.4 Low Insulation Resistance Failure Mode

In this mode, a device has an insulation resistance of less than a specified value.

NOTE — In the absence of other requirements, it is recommended that a value of 1 MΩ be used.

4.16.5 DC Holdover Failure Mode

In this mode a device has a time for follow-current turnoff in excess of the specified maximum value. When applied in an impulse life test, dc holdover need not be checked after every impulse. It shall be sufficient to measure this characteristic at the completion of the maximum required number of impulses, and then only for those devices that survived to that point.

4.16.6 Fail-Safe Operation

The use of the term *fail safe* to describe a failure mode of a gas-tube device is discouraged. Failure of a device can occur in any of the modes previously described. Some users may consider that the most desirable failure mode for the device is to maintain the protective function, namely, to fail in the short-circuit failure mode. However, system objectives of other users can require that a particular device should fail in a high breakdown failure mode so as to achieve the desired performance of the system. Thus failure in the short-circuit failure mode, while considered fail safe by many users, may be opposite the desired (safe) mode of other users. Therefore, the recommended practice is to describe the failure by one of the failure modes defined in 4.16.1 through 4.16.5.

4.17 Backup Air-Gap Devices

4.17.1

When performing the tests of 4.5, 4.6, 4.8, 4.9, and 4.10 on devices equipped with backup air gaps, the maximum source voltage rate-of-rise shall be specified.

4.17.2

When performing the test of 4.7 on devices equipped with backup air gaps, the maximum voltage rate-of-rise of the 50 Hz or 60 Hz switching transients at the device shall be specified.

Copyright © 1988 IEEE All Rights Reserved

Copyright The Institute of Electrical and Electronics Engineers, Inc.
Provided by IHS under license with IEEE
No reproduction or networking permitted without license from IHS Not for Resale