Recognized as an
American National Standard (ANSI)

IEEE Std C62.23-1995(R2001)

IEEE Application Guide for Surge Protection of Electric Generating Plants

Sponsor
Surge-Protective Devices Committee
of the
IEEE Power Engineering Society

Approved May 2, 2002

American National Standards Institute

Reaffirmed December 6,2001
Approved January 18, 1995

IEEE Standards Board

Abstract: This standard consolidates most electric utility power industry practices, accepted theories, existing standards/guides, definitions, and technical references as they specifically pertain to surge protection of electric power generating plants. Where technical information is not readily available, guidance is provided to aid toward proper surge protection and to reduce interference to communication, control, and protection circuits due to surges and other overvoltages. It has to be recognized that this application guide approaches the subject of surge protection from a common or generalized application viewpoint. Complex applications of surge protection practices may require specialized study by experienced engineers.
Keywords: electric utilities, electric power, electric generating plants, generating plants, power plants, surge protection

---

The Institute of Electrical and Electronics Engineers, Inc.

345 East 47th Street, New York, NY 10017-2394, USA

Copyright © 1995 by the Institute of Electrical and Electronics Engineers, Inc.

All rights reserved. Published 1995. Printed in the United States of America.

ISBN 1-55937-520-5

No part of this publication may be reproduced in any form, in an electronic retrieval system or otherwise, without the prior written permission of the publisher.

Copyright The Institute of Electrical and Electronics Engineers, Inc.
Provided by IHS under license with IEEE
No reproduction or networking permitted without license from IHS

Not for Resale

IEEE Standards documents are developed within the Technical Committees of the IEEE Societies and the Standards Coordinating Committees of the IEEE Standards Board. Members of the committees serve voluntarily and without compensation. They are not necessarily members of the Institute. The standards developed within IEEE represent a consensus of the broad expertise on the subject within the Institute as well as those activities outside of IEEE that have expressed an interest in participating in the development of the standard.

Use of an IEEE Standard is wholly voluntary. The existence of an IEEE Standard does not imply that there are no other ways to produce, test, measure, purchase, market, or provide other goods and services related to the scope of the IEEE Standard. Furthermore, the viewpoint expressed at the time a standard is approved and issued is subject to change brought about through developments in the state of the art and comments received from users of the standard. Every IEEE Standard is subjected to review at least every five years for revision or reaffirmation. When a document is more than five years old and has not been reaffirmed, it is reasonable to conclude that its contents, although still of some value, do not wholly reflect the present state of the art. Users are cautioned to check to determine that they have the latest edition of any IEEE Standard.

Comments for revision of IEEE Standards are welcome from any interested party, regardless of membership affiliation with IEEE. Suggestions for changes in documents should be in the form of a proposed change of text, together with appropriate supporting comments.

Interpretations: Occasionally questions may arise regarding the meaning of portions of standards as they relate to specific applications. When the need for interpretations is brought to the attention of IEEE, the Institute will initiate action to prepare appropriate responses. Since IEEE Standards represent a consensus of all concerned interests, it is important to ensure that any interpretation has also received the concurrence of a balance of interests. For this reason IEEE and the members of its technical committees are not able to provide an instant response to interpretation requests except in those cases where the matter has previously received formal consideration.

Comments on standards and requests for interpretations should be addressed to:

Secretary, IEEE Standards Board
445 Hoes Lane
P.O. Box 1331
Piscataway, NJ 08855-1331
USA

IEEE Standards documents may involve the use of patented technology. Their approval by the Institute of Electrical and Electronics Engineers does not mean that using such technology for the purpose of conforming to such standards is authorized by the patent owner. It is the obligation of the user of such technology to obtain all necessary permissions.

Copyright The Institute of Electrical and Electronics Engineers, Inc.
Provided by IHS under license with IEEE
No reproduction or networking permitted without license from IHS
Not for Resale

Introduction

(This introduction is not a part of IEEE Std C62.23-1995, IEEE Application Guide for Surge Protection of Electric Generating Plants.)

The need for an application guide for surge protection of electric generating plants was indicated in 1979 when the US Nuclear Regulatory Commission published a draft regulatory guide and value/impact statement entitled, “Lightning Protection for Nuclear Power Plants.”

After meetings between IEEE Surge-Protective Devices Committee members and members of the US Nuclear Regulatory Commission, it was agreed that the task of writing an application guide for the surge protection of electric generating plants would be performed by a specially assigned working group of the IEEE Surge-Protective Devices Committee.

The first function of this working group was to publish a bibliography containing many standards and technical papers pertaining to the protection of all elements inside a power plant complex. The “Bibliography on Power Generating Plants Surge Protection” was published in *IEEE Transactions on Power Delivery*, vol. 6, no. 2, pp. 754–793, April 1991.

The working group also decided that this guide should not only cover nuclear power plants but that the method of surge protection is applicable to nuclear as well as all electric generating plants, and that no special differentiation should be made.

This guide is the result of efforts of the working group over a period of more than ten years. The working group is part of the application of Surge-Protective Devices Subcommittee, sponsored by the Surge-Protective Devices Committee of the IEEE Power Engineering Society. Comments were also solicited from the following groups:

IEEE Power Engineering Society/Transmission and Distribution Committee
IEEE Power Engineering Society/Power System Relaying Committee
IEEE Power Engineering Society/Nuclear Power Engineering Committee
IEEE Power Engineering Society/Substations Committee
IEEE Power Engineering Society/Power System Communications Committee
IEEE Power Engineering Society/Energy Development and Power Generation Committee
IEEE Power Engineering Society/Electric Machinery Committee
IEEE Industry Applications Society/Power Systems Engineering Committee

Suggestions for the improvement of this guide will be welcome. They should be sent to

Secretary
IEEE Standards Board
Institute of Electrical and Electronic Engineers, Inc.
445 Hoes Lane
P. O. Box 1331
Piscataway, NJ 08855-1331
USA

--`,,`-`-`,,`,,`,`,,`---
Copyright The Institute of Electrical and Electronics Engineers, Inc.
Provided by IHS under license with IEEE
No reproduction or networking permitted without license from IHS
Not for Resale

At the time this guide was completed, the working group on surge protection of generating plants had the following membership:

Gilbert L. Gaibrois, *Chair*

Aldean Benge	John A. Hetrick	Joseph L. Koepfinger
Gordon Black	David W. Jackson	Subinoy Mazumdar
Jim R. Detweiler	Robert A. Jones	Burt Nemroff
H. E. Foelker	E. W. Knapp	William R. Ossman (*past chair*)
George S. Haralampu (*past chair*)		Edgar R. Taylor, Jr.

The following persons were on the balloting committee:

Charles L. Ballentine	Andrew R. Hileman	John B. Posey
Mike G. Comber	Hieu Huynh	Keith B. Stump
Douglas C. Dawson	David W. Jackson	Dennis P. Symanski
Cliff Erven	Bengt Johnnerfelt	Edgar R. Taylor, Jr.
H. E. Foelker	Robert A. Jones	Rao Thallam
Gilbert L. Gaibrois	Stanley S. Kershaw	Arnold Vitols
George S. Haralampu	Gerald E. Lee	Steve G. Whisenant
John A. Hetrick	Joseph C. Osterhout	J. W. Wilson

At the time this standard was published, it was under consideration for approval as an American National Standard. The Accredited Standards Committee on Surge Arresters, C62, had the following members at the time this document was sent to letter ballot:

Joseph L. Koepfinger, *Chair* **John A. Gauthier,** *Secretary*

Organization Represented	*Name of Representative*
Alliance for Telecommunications Industry Solutions	C. Chrysanthou
Association of American Railroads	Wayne Etter
Bonneville Power Administration	G. E. Lee
Canadian Standards Association (Liaison)	D. M. Smith
Electric Light and Power	R. A. Jones H. E. Foelker W. A. Maguire J. W. Wilson M. C. Mingoia (*Alt.*) F. Martinez
Institute of Electrical and Electronics Engineers	J. L. Koepfinger J. J. Burke G. L. Gaibrois W. H. Kapp S. S. Kershaw, Jr. C. Hansell (*Alt.*) Edgar Taylor (*Alt.*)
National Electrical Manufacturers Association	Dennis W. Lenk Bernhard Wolff D. Worden Larry Bock J. Woodworth

Copyright The Institute of Electrical and Electronics Engineers, Inc.
Provided by IHS under license with IEEE
No reproduction or networking permitted without license from IHS
Not for Resale

National Institute of Standards and Technology ..... F. D. Martzloff

Rural Electrification Administration ..... George J. Bagnall

Underwriters Laboratories ..... P. Notarian
Larry Williams (*Alt.*)

Members-at-Large ..... J. Osterhout
B. Panesar
R. B. Standler

The final conditions for approval of this standard were met on January 18, 1995. This standard was conditionally approved by the IEEE Standards Board on December 13, 1994, with the following membership:

Wallace S. Read, *Chair* **Donald C. Loughry,** *Vice Chair*
Andrew G. Salem, *Secretary*

Gilles A. Baril
Bruce B. Barrow
José A. Berrios de la Paz
Clyde R. Camp
James Costantino
Stephen L. Diamond
Donald C. Fleckenstein
Jay Forster*
Ramiro Garcia
Donald N. Heirman
Richard J. Holleman
Jim Isaak
Ben C. Johnson
Sonny Kasturi
Lorraine C. Kevra
E. G. "Al" Kiener
Ivor N. Knight
Joseph L. Koepfinger*
D. N. "Jim" Logothetis
L. Bruce McClung
Marco W. Migliaro
Mary Lou Padgett
Arthur K. Reilly
Ronald H. Reimer
Gary S. Robinson
Leonard L. Tripp

*Member Emeritus

Also included are the following nonvoting IEEE Standards Board liaisons:

Satish K. Aggarwal
James Beall
Richard B. Engelman
Robert E. Hebner

Mary Lynne Nielsen
IEEE Standards Project Editor

Copyright The Institute of Electrical and Electronics Engineers, Inc.
Provided by IHS under license with IEEE
No reproduction or networking permitted without license from IHS
Not for Resale

Contents

CLAUSE PAGE

1. Overview 1

2. References 3

3. Definitions 6

4. Power lines 6

4.1 Scope 6
4.2 Protection of transmission lines 7
4.3 Protection of distribution lines 13

5. Switchyard 16

5.1 Scope 16
5.2 Equipment protection 16
5.3 Controls/Communication 19

6. Power plant 27

6.1 Scope 27
6.2 Equipment protection 28
6.3 Controls/Communication 31

7. Remote ancillary facilities 37

7.1 Scope 37
7.2 Indoor equipment 37
7.3 Outdoor equipment 37

ANNEXES

Annex A Soil resistivity 38

Annex B Bibliography 39

Copyright The Institute of Electrical and Electronics Engineers, Inc.
Provided by IHS under license with IEEE
No reproduction or networking permitted without license from IHS
Not for Resale

IEEE Application Guide for Surge Protection of Electric Generating Plants

1. Overview

This application guide consolidates most electric utility power industry practices, accepted theories, existing standards/guides, definitions, and technical references as they specifically pertain to surge protection of electric power generating plants. Where technical information is not readily available, guidance is provided to aid toward proper surge protection and to reduce interference to communication, control, and protection circuits due to surges and other overvoltages. It has to be recognized that this application guide approaches the subject of surge protection from a common or generalized application viewpoint. Complex applications of surge protection practices may require specialized study by experienced engineers.

Surge overvoltages can cause equipment damage, system malfunction, or power interruptions at electric power generating plants if plants are not adequately protected against them. Excessive surge voltages have to, therefore, be controlled or reduced to permissible levels. These overvoltage surges in power generating plants may be generated by lightning or by system events such as switching, faults, load rejections, or by some combinations of these.

The subject of surge protection of power generating plants is very broad and complex, with many ramifications. To provide an understanding for consistent and comprehensive surge protection and to reduce interference, the power generating plant has been divided in this guide into four subareas: the power lines, the switchyard, the power plant, and the remote ancillary systems (see figure 1). Within each subarea, the "surge environment" in which the associated equipment and systems are required to operate is addressed in terms of the common overvoltage and electromagnetic interference sources identified below:

— Direct lightning strokes
— Incoming surges
— Internally generated surges
— Ground potential rise
— Electromagnetic interference

To evaluate each of these sources, the following questions are addressed:

— Is there a surge or interference problem from this source?
— How is surge protection accomplished?
— What standards and guides are available?
— How is surge interference initiated?

A typical power generating plant is illustrated by the one-line diagram in figure 2.

The subareas "switchyard" and "power lines" include the substation equipment, the incoming power and communication lines, and utilization power systems, as well as other plant switchyard systems. The "power plant" subarea includes the power equipment (distribution and utilization) and its associated communication, instrumentation, and protective/control equipment.

Copyright The Institute of Electrical and Electronics Engineers, Inc.
Provided by IHS under license with IEEE
No reproduction or networking permitted without license from IHS
Not for Resale

The “remote ancillary facilities” subarea includes all equipment pertaining to systems outside the power plant and switchyard, such as fuel handling facilities, the water intake building, the weather tower, outside plant monitoring facilities, etc.

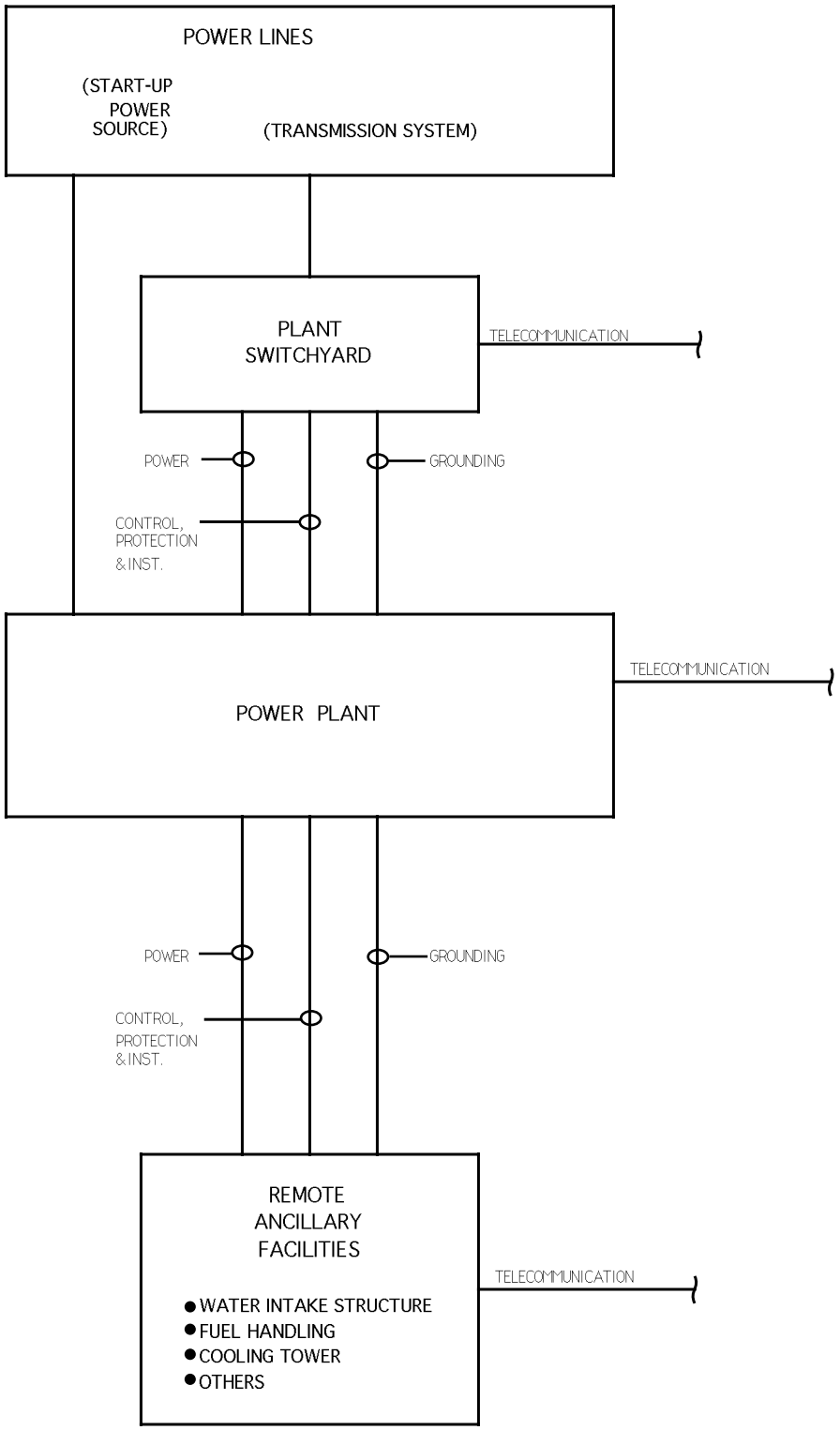

Figure 1—Power generating plant block diagram

Copyright The Institute of Electrical and Electronics Engineers, Inc.
Provided by IHS under license with IEEE
No reproduction or networking permitted without license from IHS
Not for Resale

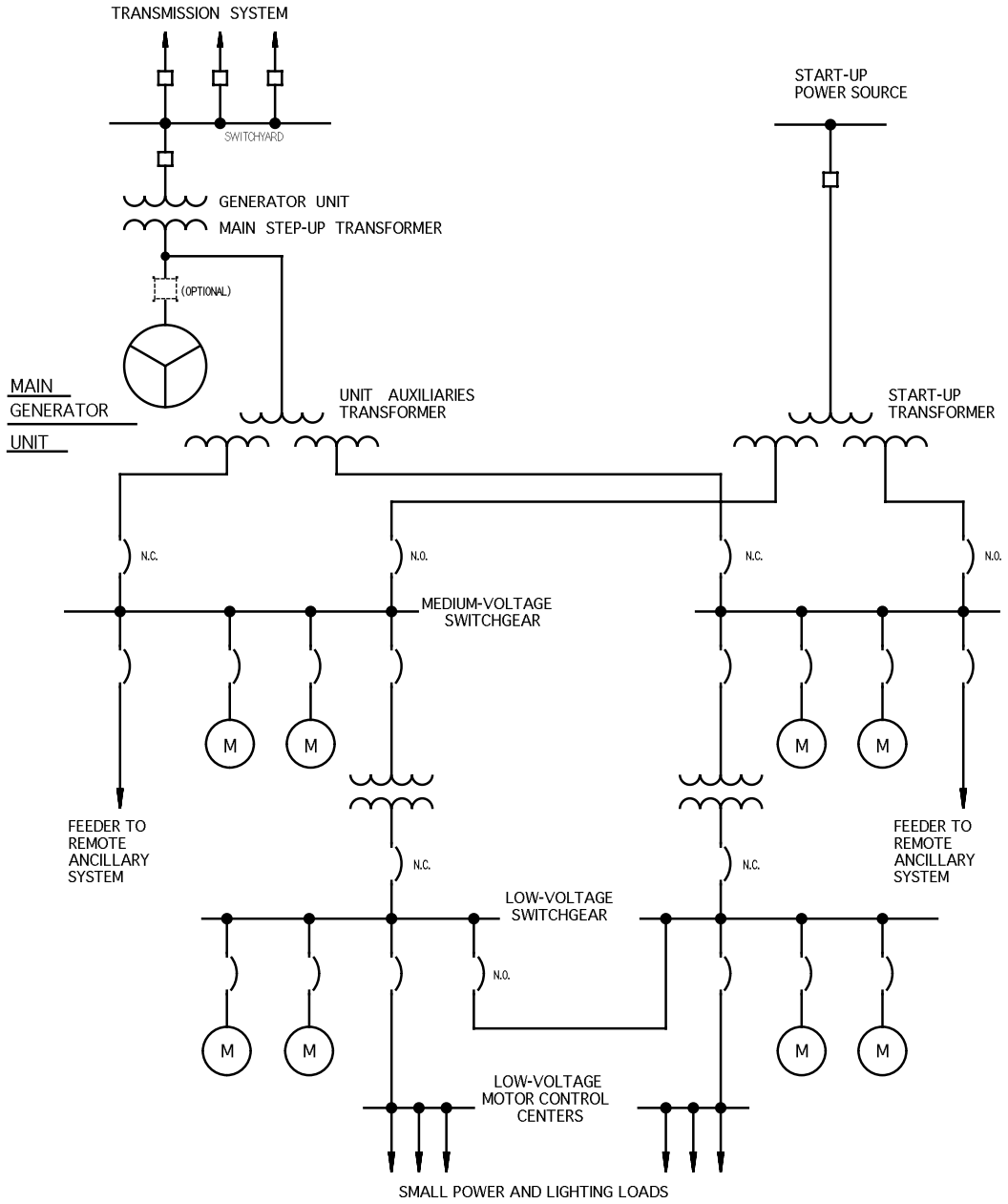

Figure 2—Power generating plant simplified one-line diagram

2. References

This guide shall be used in conjunction with the listed references applicable to the electrical system to be protected.

Accredited Standards Committee (ASC) C2-1993, National Electrical Safety Code.[1]

Copyright The Institute of Electrical and Electronics Engineers, Inc.
Provided by IHS under license with IEEE
No reproduction or networking permitted without license from IHS
Not for Resale

ANSI C62.61-1993, American National Standard for Gas Tube Surge Arresters on Wire Line Telephone Circuits.

ANSI/NFPA 70-1993, National Electrical Code.[2]

ANSI/NFPA 780-1992, Lightning Protection Code.

IEEE Std 18-1992, IEEE Standard for Shunt Power Capacitors (ANSI).[3]

IEEE Std 141-1993, IEEE Recommended Practice for Electric Power Distribution for Industrial Plants (IEEE Red Book) (ANSI).

IEEE Std 142-1991, IEEE Recommended Practice for Grounding of Industrial and Commercial Power Systems (IEEE Green Book) (ANSI).

IEEE Std 367-1987, IEEE Recommended Practice for Determining the Electric Power Station Ground Potential Rise and Induced Voltage from a Power Fault (ANSI).

IEEE Std 368-1977, IEEE Recommended Practice for Measurement of Electrical Noise and Harmonic Filter Performance of High-Voltage Direct-Current Systems.[4]

IEEE Std 384-1992, IEEE Standard Criteria for Independence of Class 1E Equipment and Circuits.

IEEE Std 487-1992, IEEE Recommended Practice for the Protection of Wire Line Communications Facilities Serving Electric Power Stations (ANSI).

IEEE Std 518-1982 (Reaff. 1990), IEEE Guide for the Installation of Electrical Equipment to Minimize Noise Inputs to Controllers from External Sources (ANSI).

IEEE Std 519-1992, IEEE Recommended Practices and Requirements for Harmonic Control in Electric Power Systems (ANSI).

IEEE Std 525-1992, IEEE Guide for the Design and Installation of Cable Systems in Substations.

IEEE Std 643-1980 (Reaff. 1992), IEEE Guide for Power-Line Carrier Applications (ANSI).

IEEE Std 665-1987, IEEE Guide for Generating Station Grounding.[5]

IEEE Std 776-1992, IEEE Recommended Practice for Inductive Coordination of Electric Supply and Communication Lines (ANSI).

IEEE Std 1050-1991, IEEE Guide for Instrumentation and Control Equipment Grounding in Generating Stations (ANSI).

---

[1]ASC C2-1993 is available from the Institute of Electrical and Electronics Engineers, 445 Hoes Lane, P.O. Box 1331, Piscataway, NJ 08855-1331, USA..

[2]NFPA publications are available from Publications Sales, National Fire Protection Association, 1 Batterymarch Park, P.O. Box 9101, Quincy, MA 02269-9101, USA.

[3]IEEE publications are available from the Institute of Electrical and Electronics Engineers, 445 Hoes Lane, P.O. Box 1331, Piscataway, NJ 08855-1331, USA.

[4]IEEE Std 368-1977 has been withdrawn; however, copies can be obtained from the Institute of Electrical and Electronics Engineers, 445 Hoes Lane, P.O. Box 1331, Piscataway, NJ 08855-1331, USA.

[5]IEEE Std 665-1987 has been withdrawn; however, copies can be obtained from the Institute of Electrical and Electronics Engineers, 445 Hoes Lane, P.O. Box 1331, Piscataway, NJ 08855-1331, USA.

Copyright The Institute of Electrical and Electronics Engineers, Inc.
Provided by IHS under license with IEEE
No reproduction or networking permitted without license from IHS Not for Resale

IEEE Std 1100-1992, IEEE Recommended Practice for Powering and Grounding Sensitive Electronic Equipment (IEEE Emerald Book) (ANSI).

IEEE Std 1143-1994, IEEE Guide on Shielding Practice for Low Voltage Cables.

IEEE Std C37.90-1989, IEEE Standard Relays and Relay Systems Associated with Electric Power Apparatus (Section 9, Surge Withstand Capability (SWC) Tests, and Appendix A) (ANSI).

IEEE Std C37.90.l-1989, IEEE Standard Surge Withstand Capability (SWC) Tests for Protective Relays and Relay Systems (ANSI).

IEEE Std C37.90.2-1987, IEEE Trial-Use Standard Withstand Capability of Relay Systems to Radiated Electromagnetic Interference from Transceivers (ANSI).

IEEE Std C37.99-1990, IEEE Guide for the Protection of Shunt Capacitor Banks (ANSI).

IEEE Std C37.109-1988 (Reaff. 1993), IEEE Guide for the Protection of Shunt Reactors (ANSI).

IEEE Std C57.13.3-1983 (Reaff. 1991), IEEE Guide for the Grounding of Instrument Transformer Secondary Circuits and Cases (ANSI).

IEEE Std C57.110-1986 (Reaff. 1992), IEEE Recommended Practice for Establishing Transformer Capability When Supplying Nonsinusoidal Load Currents (ANSI).

IEEE Std C62.22-1992, IEEE Guide for the Application of Metal-Oxide Surge Arresters for Alternating Current Systems (ANSI).

IEEE Std C62.33-1982 (Reaff. 1994), IEEE Standard Test Specifications for Varistor Surge-Protective Devices (ANSI).

IEEE Std C62.35-1987 (Reaff. 1993), IEEE Standard Test Specifications for Avalanche Junction Semiconductor Surge Protective Devices.

IEEE Std C62.36-1994, IEEE Standard Test Methods for Surge Protectors Used in Low-Voltage Data, Communications, and Signaling Circuits (ANSI).

IEEE Std C62.41-1991, IEEE Recommended Practice on Surge Voltages in Low-Voltage AC Power Circuits (ANSI).

IEEE Std C62.42-1992, IEEE Guide for the Application of Gas Tube Arrester Low-Voltage (Equal to or less than 100 Vrms or 1200 Vdc) Surge-Protective Devices (ANSI).

IEEE Std C62.47-1992, IEEE Guide on Electrostatic Discharge (ESD)—Characterization for the ESD Environment (ANSI).

NEMA ICS 1-1993, General Standards for Industrial Control and Systems.[6]

NEMA ICS 2-1993, Controllers, Contactors, and Overload Relays, Rated Not More Than 2000 Volts AC or 750 Volts DC.

NEMA ICS 3-1993, Factory Built Assemblies.

[6]NEMA publications are available from the National Electrical Manufacturers Association, 2101 L Street NW, Suite 300, Washington, DC 20037, USA.

Copyright The Institute of Electrical and Electronics Engineers, Inc.
Provided by IHS under license with IEEE
No reproduction or networking permitted without license from IHS Not for Resale

3. Definitions

3.1 back flashover: A flashover of insulation resulting from a lightning stroke to part of a network or electric installation that is normally at ground potential.

3.2 counterpoise: A conductor or system of conductors arranged beneath the line; located on, above, or most frequently below the surface of the earth; and connected to the grounding system of the towers or poles supporting the line.

3.3 coupling factor: The ratio of the induced voltage to the inducing voltage on parallel conductors.

For example, at the tower, the shield or coupling wires and tower crossarms are at practically the same potential (because of lightning stroke travel time). The stress across the insulator string is one minus the coupling factor multiplied by the tower top potential.

$$\text{Stress} = (1.0 - K_{\text{fc}}) \times V_{\text{TT}} \quad (1)$$

where

K_{fc} is the coupling factor
V_{TT} is the tower top voltage

3.4 coupling wire: A conductor attached to the transmission line structure and below the phase wires, with proper clearance, and connected to the grounding system of the towers or the pole supporting the line.

3.5 ground potential rise: The voltage that a station grounding grid may attain relative to a distant grounding point assumed to be at the potential of remote earth.

3.6 overhead groundwire (lightning protection): Grounded wire or wires placed above phase conductors for the purpose of intercepting direct strokes in order to protect the phase conductors from the direct strokes. They may be grounded directly or indirectly through short gaps.

3.7 remote earth (potential): The location outside the influence of local grounds. Always assumed to be at zero potential.

3.8 shielding angle: The angle between a vertical line through the overhead ground wire and a line connecting the overhead ground wire to the shielded conductor.

3.9 shield wire (electromagnetic fields): A wire employed to reduce the effects on electric supply or communication circuits from extraneous sources.

3.10 GPR: Acronym for **ground potential rise**. *See*: 3.5.

4. Power lines

4.1 Scope

The purpose of this clause is to guide the reader in understanding the nature of surges that can enter the power plant premises via transmission and distribution lines and to indicate methods to reduce their magnitudes. Overvoltage surges resulting from lightning strokes and line switching may stress the insulation of

Copyright The Institute of Electrical and Electronics Engineers, Inc.
Provided by IHS under license with IEEE
No reproduction or networking permitted without license from IHS Not for Resale

power plant equipment, circuits, and systems. This provides information for evaluating line conditions as they affect the surges that may enter the switchyard and power plant.

4.2 Protection of transmission lines

Incoming surges to the switchyard or power plant can result from direct lightning strokes to the transmission lines, back flashovers, or switching surges initiated at remote substations and traveling on the transmission lines. Surges induced by nearby strokes usually do not exceed (and in any case are limited by) the withstand strength of the transmission line insulation (see [B4], [B30], and [B56]).[7]

A transmission line design involves the use of risk analysis technology to achieve a design that produces a level of performance suitable for its mission. Insulation coordination factors that have to be considered in the design are: switching surges, impulses caused by lightning, and the reduction of electrical strength caused by contamination of the insulators. Effects of insulator contamination are described in [B8]. The surge voltages, rather than the normal operating voltage, determine the transmission line insulation requirements. Lines can be designed to give a desired lightning performance by the proper use of overhead groundwires and a suitable combination of line insulation and tower footing resistance. Switching surge performance is determined primarily by the line insulation, which is selected to withstand a reasonably severe switching surge caused by line switching or reclosing. The objective is to determine each element in the line design to obtain the desired balance between performance and cost. The insulation design for any particular line will depend on its location, which determines the lightning exposure, and on system design, which determines the magnitude of switching surges (see [B103]).

The insulation design for a high-voltage (HV) or an extra-high-voltage (EHV) line may be dominated by either the switching surge or lightning requirements. For an ultra-high-voltage (UHV) line, switching surge is the dominant factor. Switching surges usually establish the insulation required on transmission lines 345 kV and above. Lightning surges may control the insulation design in areas of high ground resistance, high lightning incidence, or where use of breaker closing resistors or shunt reactors minimize switching surge amplitudes. In most cases, it is not advisable arbitrarily to neglect one or the other type of transient. Both need careful consideration (see [B103]).

4.2.1 Direct lightning strokes

Protection of a transmission line against lightning is dependent on (see [B20])

- Overhead groundwires located to shield the line conductors from direct lightning strokes
- Adequate clearance from the line conductor to ground points at the structure
- Clearance from the line conductor to the overhead groundwires at midspan
- Tower footing resistance, which should be as low as economically justified
- Number of overhead groundwires to be used
- Wave shape and magnitude of the stroke current (statistical quantities), and the resulting surge voltages on the phase and overhead groundwires
- Tower height and phase conductor configuration and spacing
- Span length
- Keraunic level of the area in which the transmission line is operating

Organizations have developed generalized curves for estimating the lightning performance of transmission lines from 69 kV to 800 kV. The American Institute of Electrical Engineers (AIEE) method applies to systems of 230 kV and below, while the IEEE, Edison Electric Institute (EEI), and Electric Power Research Institute (EPRI) methods deal with the higher voltage lines and their taller structures (see [B1], [B4], [B10], and [B103]).

[7]The numbers in brackets preceded by the letter B correspond to those in the bibliography in annex B.

Copyright The Institute of Electrical and Electronics Engineers, Inc.
Provided by IHS under license with IEEE
No reproduction or networking permitted without license from IHS Not for Resale

With proper line design, flashovers of transmission lines due to lightning can be limited to about one per 161 km (100 miles) per year. One objective of line design for lightning performance is to reduce the impulse voltage across the line insulation to a value below the impulse flashover voltage of that insulation so that line outages are reduced. This will also reduce the magnitude of surges entering the switchyard. A suitable combination of line insulation and tower footing resistance minimizes line flashovers that result from lightning stroke currents. It is impractical, however, to provide sufficiently high impulse insulation levels to withstand the voltage developed when a phase conductor is struck by any but weak lightning strokes. An overhead groundwire is therefore used, where necessary, to improve the lightning performance by shielding the phase conductors from a direct lightning stroke and to divert the stroke currents to ground, as shown in figure 3.

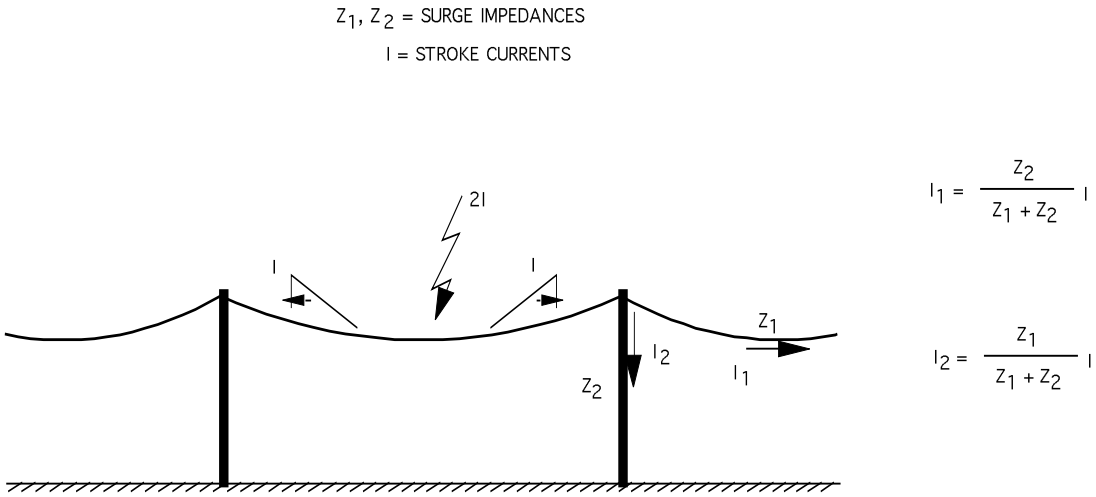

Figure 3—Stroke current diverted to ground

The different means of protection used to improve the line performance against lightning strokes is explained briefly in the following subclauses. The referenced material provides more detailed explanations (see [B1], [B4], [B10], [B47], [B49], [B56], [B87], and [B103]).

4.2.1.1 Overhead groundwires and coupling wires

Wires connected near the top of line structures or towers and properly located above the phase conductors provide shielding against lightning strokes. Shielding failures may occur, and line flashovers may occur if the voltage impressed on the line is greater than the critical flashover voltage (CFO) of the line insulation (see [B82]). Field data (see [B26] and [B62]) were published as the result of an EEI research project, “The Mechanism of Lightning” or “Pathfinder Project.” This project determined that insulator flashovers occur as the result of direct strokes to phase conductors; from shielding failures; and as the result of strokes to the tower or overhead groundwire(s), causing the back flashovers. Even with low tower footing resistance, the shielding failure mechanism predominates where large shielding angles and high towers exist. Back flashover events predominate when high tower footing resistances are associated with low insulation levels and low tower heights.

For those lines participating in the “Pathfinder Project,” which demonstrated superior lightning performance, the average height of the overhead groundwire versus the average shielding angle formed with a phase conductor were plotted. Based on this field data, the plot shown in figure 4 was suggested as the design curve for selecting shielding angles to provide good lightning performance (see [B27]).

Shielding failure curves based on field data were reported in 1964 (see [B87]). The curves (figure 5) show the probability of shielding failures for a given stroke to a line as a function of tower height and shielding angle. The shielding angle curve of figure 4 would then provide shielding failure probabilities of less than

--`,,-`-`,,`,,`,`,,`---

Copyright The Institute of Electrical and Electronics Engineers, Inc.
Provided by IHS under license with IEEE
No reproduction or networking permitted without license from IHS Not for Resale

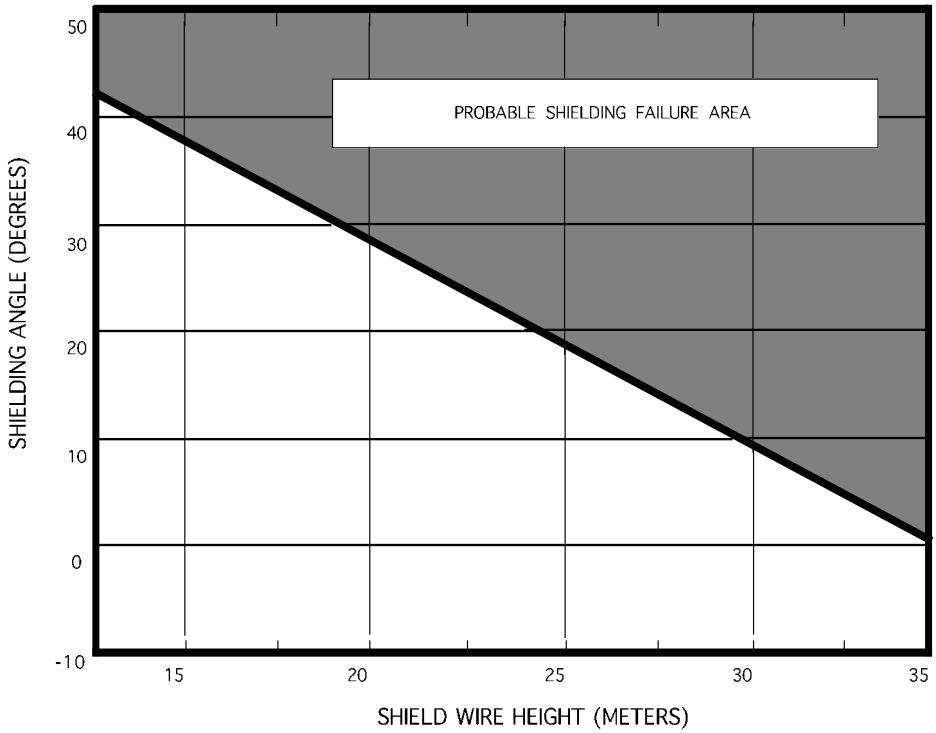

Figure 4—A guide for EHV line shielding angles proposed by Armstrong and Whitehead

0.01 based on the curves in figure 5. This is less than one shielding failure for every 100 strokes terminating on the overhead groundwire.

For double-circuit steel structures up to 42.7 m (140 ft) high (see figure 5), one overhead groundwire over each set of power conductors provides near-perfect shielding. In addition, the two wires lower the surge impedance to the lightning stroke, dissipating a greater portion of the stroke current along these wires to remote towers and a lesser portion down the nearby structures. The tower-top potentials will be lowered with two wires. The coupling factor is improved with two overhead groundwires versus one by approximately 20% for a 30.5 m (100 ft) steel pole. Adding a second overhead groundwire reduces overall outage rates by 30–35%; reduction in double-circuit outages of greater than 40% have been experienced (see [B40] and [B52]).

When double-circuit steel transmission structures are used, both circuits may be susceptible to tripouts caused by the same lightning stroke. Experience has shown that rates as high as 50% of tripouts, caused by lightning, can involve both circuits (see [B28], [B51], and [B52]). The rate depends on line design and tower footing resistance. To reduce the vulnerability of a line to tripouts, it is necessary to either reduce the potential of the tower struck, reduce the tower-to-conductor potential gradient, or both. The former is accomplished by the use of multiple overhead groundwires and a buried counterpoise. This results in a lower surge impedance to the lightning stroke current than the single overhead groundwire and, therefore, a lower tower potential for a given stroke current. Multiple overhead groundwires also reduce the tower-to-conductor potential gradient due to closer proximity and better coupling with the phase conductor than with a single overhead groundwire.

Better lightning performance can also be achieved by installing a coupling wire under the phase conductors. The phase conductors are thus essentially surrounded by conductors at tower potential. Coupling is as high

Copyright The Institute of Electrical and Electronics Engineers, Inc.
Provided by IHS under license with IEEE
No reproduction or networking permitted without license from IHS
Not for Resale

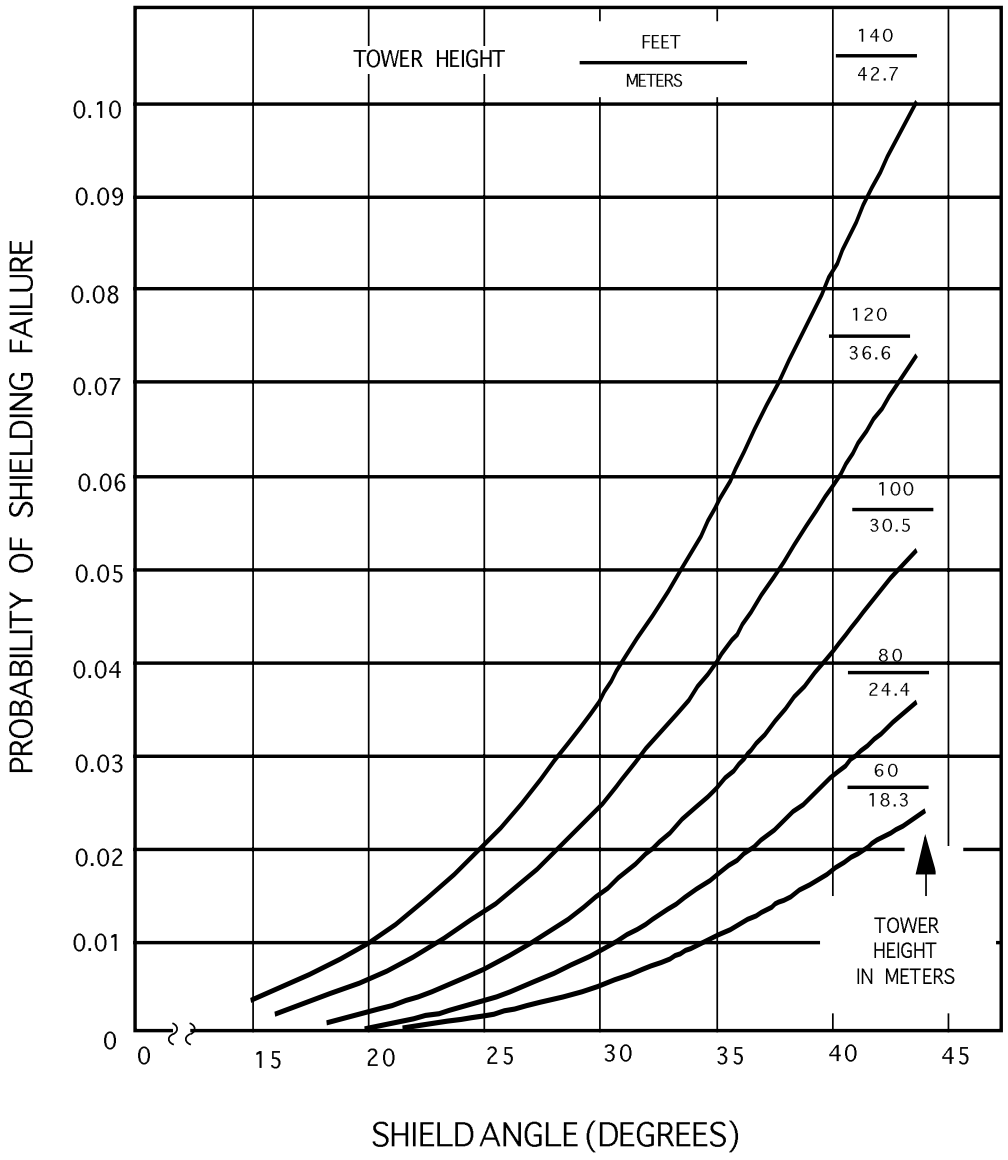

Figure 5—Probability of shielding failure versus shielding angle between grounds

as possible, and insulation stress is as low as possible. To improve reliability of the two circuits further and to decrease the probability of both circuits flashing over, it may be desirable to increase the insulation level of one circuit to a point where the other normally insulated circuit is most likely to flash over.

The merits of a ground (coupling) wire located under the phase conductors and overhead groundwires were discussed in [B83]. The improvement in coupling is calculated to be approximately 30% for the top phase and 80% for the bottom phase. Following a stroke to the structure or shield wires, increased coupling lowers the potential difference between phase conductors and grounded wires by raising the percentage of the ground wire potential impressed on the phase conductor. The result is less surge voltage stress across the insulation and less likelihood of flashover for a given stroke current.

The improvement in bottom-phase coupling is important for double-circuit steel structures. Indications are that the bottom phase is usually involved in double-circuit flashovers. It was calculated that without a cou-

Copyright The Institute of Electrical and Electronics Engineers, Inc.
Provided by IHS under license with IEEE
No reproduction or networking permitted without license from IHS Not for Resale

pling wire, 58% of flashovers take place on the bottom phases and only 10% on the top phases. This is attributed solely to the difference in coupling with the overhead groundwires between top and bottom phase conductors (see [B51] and [B52]). However, experience on two US systems indicates a very different picture. A very small number of flashovers involved the bottom phases (see [B24] and [B40]). Both systems are in areas with low tower footing resistances. Nonetheless, experience indicates a large lightning performance improvement of double-circuit transmission lines using coupling wires (see [B20]).

4.2.1.2 Tower footing resistance

A lightning stroke to the overhead groundwire will develop a voltage across the line insulation. Flashover may occur depending on the stroke characteristics, line design, and footing resistance. General curves are available for estimating insulation flashover rates for both vertical and horizontal line configurations for voltages ranging from 115 kV to 800 kV (see [B10] and [B47]).

Lightning performance is dependent upon the surge resistance of the tower footing rather than the 60 Hz measurement. Low tower footing resistances (less than 15 Ω) have essentially equal surge and 60 Hz resistance magnitude (see [B47]). For higher tower footing resistances, the ratio of surge to 60 Hz resistance is much less than one, and the surge resistance should be estimated from the best available data (see [B20])]. Conservative performance values will result if the average of the surge and measured resistances are used. In general, a 60 Hz tower footing resistance of 20 Ω for extra high voltage, and 10 Ω for high voltage, provide acceptable lightning performance for the line (see [B10] and [B47]).

A low tower footing resistance is directly related to a low earth resistivity value. The resistivity of the earth varies over extremely wide limits depending on the composition of the soil and its moisture content (see annex A). To obtain low tower footing resistance in areas of high soil resistivity, appropriate electrodes should be used to decrease the effective tower ground resistance to a value that provides an acceptable tripout rate for the line (see [B103]).

In soils of low or medium resistivity (100 Ω·m or less) adequate grounding can usually be obtained by driven ground rods. The resistance of the driven ground rods has been derived and reported in the past (see [B100]). Reinforced concrete tower footing can also be used for grounding instead of driven ground rods.

4.2.1.3 Counterpoise wires

In areas of high soil resistivity (1000 Ω·m or higher), counterpoise wires provide a practical and economic means of reducing the tower footing resistance to acceptable values.

As a lightning current surge is applied to a single counterpoise wire, the effective resistance is initially in the order of 150–200 Ω, which is the surge impedance value of the wire. This impedance decays exponentially to the final leakage resistance in a time (microseconds) equal to approximately 20 times the length of the counterpoise in thousands of meters (six times in thousands of feet). A 76 m (250 ft) counterpoise with a surge impedance of 150 Ω reaches its leakage resistance 1.5 μs after the current surge is applied. Counterpoise leakage resistance can be calculated from the resistivity of the earth. Leakage resistances as functions of earth and length of counterpoise have been calculated and shown in graph form (see [B20]). Actual experience has been reported showing very large improvements of transmission line lightning performance after the installation of counterpoise wires.

A two-wire counterpoise is used for lowering the tower footing resistance for stroke currents reaching crest in about 4 μs. For very high rates of rise of stroke current, multiple radial counterpoise wires are more effective than a single continuous wire parallel to the line. The length of each of these radial wires should be approximately one-half the tower height. Approximately 12 wires (or three per tower leg) are normally recommended (see [B39]).

Copyright The Institute of Electrical and Electronics Engineers, Inc.
Provided by IHS under license with IEEE
No reproduction or networking permitted without license from IHS Not for Resale

If the lightning performance of the transmission line is unacceptable, then a decrease in tower footing resistance, additional overhead groundwire, coupling wire, or a combination of these should be considered.

In one transmission line design, an essentially "lightning proof" double-circuit 330 kV tower was achieved with tower footing resistances of less than 20 Ω and a coupling wire (see [B52]). Using previously reported analytical techniques, it is estimated that the tower with coupling wire will withstand a 100% more powerful stroke current than the same tower without coupling wire (see [B49], [B51], and [B52]).

4.2.1.4 Surge arresters—transmission lines

The design goal of transmission lines is to decrease the surge magnitude entering the switchyard and to provide the required line performance. Consideration should be given to special line construction necessitated by the geography of the line right-of-way, public requirement, and economics (see [B78]).

4.2.1.4.1 High towers

These are generally required for river crossings and mountain-to-mountain spans. When lightning strikes tall towers, high voltage across the line insulation will be mitigated because of the better coupling between the overhead groundwires and the phase conductors. For example, the coupling factor of 30–45 m (100–150 ft) towers may be 25–40%, and it may be 90% for a 122 m (400 ft) tower (see [B39]).

Masts on top of the tall towers usually cause most strokes to be of the upward leader type, often resulting in stroke currents of less than 1000 A. A low tower footing resistance will further aid in keeping the voltage across the line insulation below the withstand value. Multiple radial counterpoise wires, each having lengths equal to half the tower height, will establish a true-earth plane for impulses as near as possible to the physical surface of the earth. Twelve such wires are recommended for both conventional and guyed tall towers.

Surge arresters on each phase will provide further protection for tall towers. Arresters are especially recommended for tall towers if the shield wires are omitted.

4.2.1.4.2 Unshielded lines

Shield wires are eliminated to obtain a maximum height reduction of transmission lines, including compact lines. This becomes necessary for various reasons. One such reason is the choice of designing low transmission structures for public requirements. The elimination of the shield wires results in relatively poor lightning performance, unless the line is built in forested areas or low keraunic level areas (see [B21]).

An unshielded line can be protected by installing surge arresters on each phase at intervals along the line. Arresters at every structure can virtually eliminate flashovers, but at a high cost. Arresters on every second or third structure can provide reasonable line performance. Special attention has to be given to the section of an unshielded line leaving a switchyard to prevent high current direct strokes to the line phase conductors from entering the switchyard. Surge arresters should be installed on the unshielded line structures approximately 1.6 km (1 mi) away from the switchyard.

4.2.2 Switching surges

Switching surges are generated within the power system through circuit breaker or switch operation. It is usually economical at voltages 345 kV and above to take advantage of operation-related means for reducing the surge magnitudes.

Some examples of switching operations that generate significant overvoltages are (see [B2], [B11], and [B12])

Copyright The Institute of Electrical and Electronics Engineers, Inc.
Provided by IHS under license with IEEE
No reproduction or networking permitted without license from IHS Not for Resale

— Energization and de-energization of capacitor banks, underground cables, or lines with or without connected transformers and/or shunt reactors
— Energization or de-energization of busses with airbreak switches
— Energization of lines or cables with or without connected transformers and/or shunt reactors
— High-speed reclosing of lines with or without shunt reactors
— Energization and de-energization of transformers with or without connected shunt reactors
— De-energization of shunt reactors
— Sudden loss of load on long lines with or without connected transformers
— Out-of-phase switching

The principal means available for limiting switching surge magnitudes on transmission lines include the use of

a) Surge arresters
b) Breakers with closing resistors (see [B29])
c) Shunt reactors and potential transformers (see [B48])
d) Operating restrictions
e) Shorter lines by adding intermediate switching stations
f) Breaker timing

Usually, the switching surge magnitudes can be limited to approximately two per unit, or lower, by one or a combination of the six items in the preceding list. Voltages in the order of 3.5 per unit have been measured due to energizing or high-speed reclosing into a trapped charge without breaker closing resistors. These measurements are similar in magnitude to values reported from model studies (see [B2] and [B12]).

For switching surges, the air clearances are usually of particular concern. The switching surge flashover strength of line insulation is a statistical quantity. The strength changes as wave shapes and amplitudes of surges change and as meteorological conditions around the insulation change. Voltage waves representative of switching surges encountered on electric power systems have times to crest ranging from less than 50 μs to more than 2000 μs. The tower window gap is an important design consideration because it has the weakest insulation of all air clearances in the tower window. Enlarging the window increases the cost of the tower.

The CFO voltage for the tower window gap for the entire EHV to UHV range is presented in figure 6, which gives a “fit” from the data of many investigations (see [B103], Chapter 11, pages 512–516).

Switching surge performance is evaluated in terms of the probability of flashover. When multiplied by the number of switching operations expected in a given time period, the number of tripouts expected for that time period is calculated. This number of trip-outs is an average over many of the selected time periods. Unlike the case for lightning, many towers are stressed and more insulators are involved for a greater time period due to the fact that the switching surge travels many kilometers (miles) before attenuating significantly. This increases the probability of a flashover caused by an insulator string swinging due to wind conditions, decreasing the electrical clearance.

4.3 Protection of distribution lines

Incoming surges on distribution lines to the switchyard or power plant can result from direct or induced lightning strokes, or fault- and switching-generated surges.

4.3.1 Lightning strokes

Since the insulation levels of distribution lines have an impulse withstand between 150–500 kV, and since the surge impedance of the lines are in the order of 400–500 Ω, direct lightning strokes are likely to cause line flashovers (see [B18], [B19], [B25], [B36], [B46], and [B50]).

Copyright The Institute of Electrical and Electronics Engineers, Inc.
Provided by IHS under license with IEEE
No reproduction or networking permitted without license from IHS Not for Resale

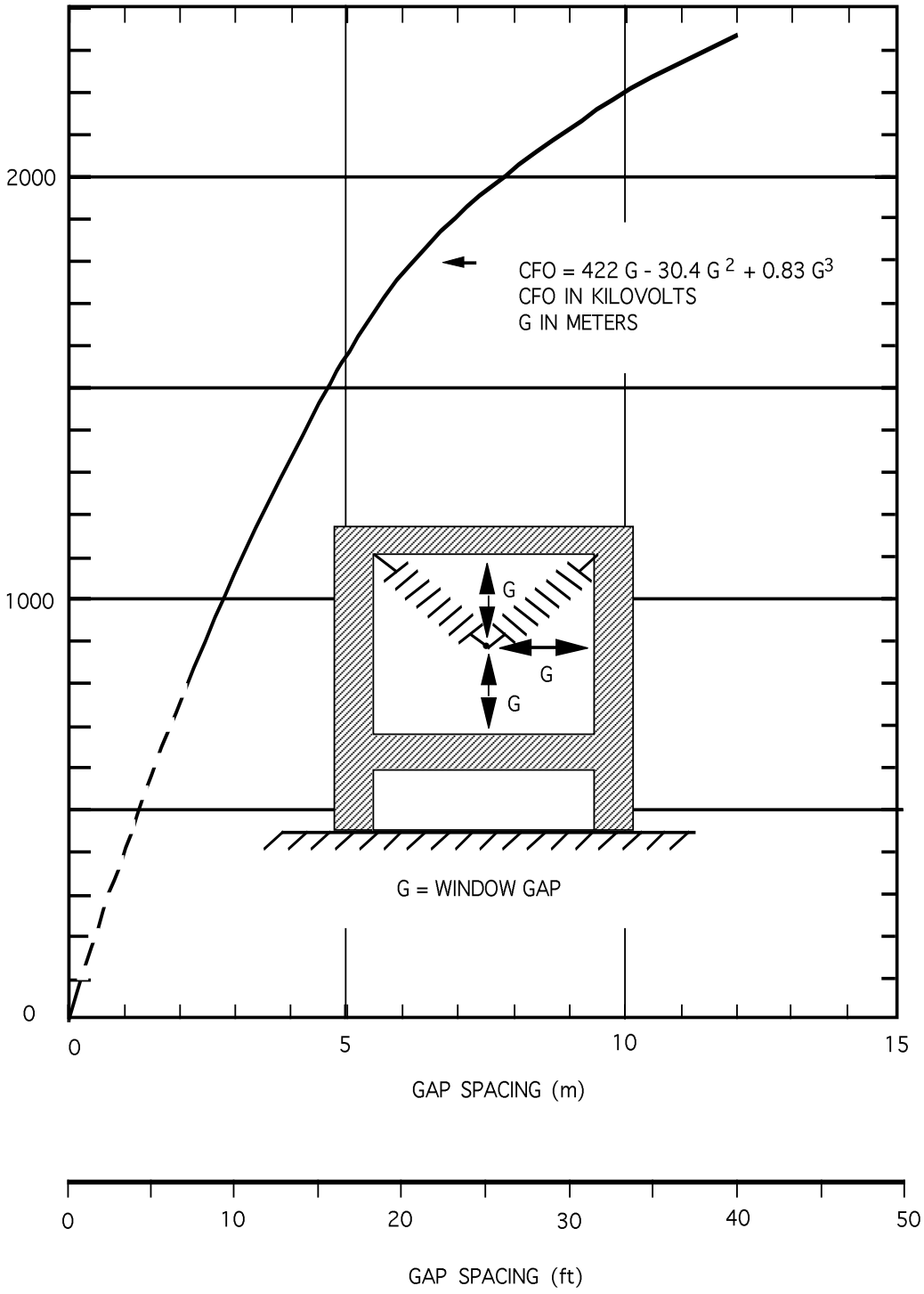

Figure 6—Switching surge strength for tower window gaps

Copyright The Institute of Electrical and Electronics Engineers, Inc.
Provided by IHS under license with IEEE
No reproduction or networking permitted without license from IHS
Not for Resale

To avoid distribution line flashovers due to direct or induced lightning strokes (see [B58]), these lines may be shielded and/or arrester protected where lightning is more predominant (see [B21]).

4.3.2 Switching surges

Since the magnitude of switching surges are less than 3.0 pu, switching surges in distribution systems are of little consequence. For instance a 34.5 kV system will have a minimum lightning impulse withstand of 150 kV with a switching surge withstand of 100 kV. A 3.0 pu switching surge will result in an overvoltage with a peak magnitude of about 84 kV, which is below the insulation level of the line. The protective margin is greater at lower system voltages.

4.3.3 Ferroresonance

This phenomenon may occur while the system is switched single-phase or while one phase of the line is unintentionally opened due to fuse operation, a broken conductor, or a burned open connector (see [B69]).

To avoid most ferroresonance problems, all phases of the line should always be switched simultaneously through gang-operated switches, three-phase reclosers, or breakers.

4.3.4 Arrester selection

The rating of the surge arrester depends on the system voltage and its grounding method (see IEEE Std C62.22-1992[8] and [B59]). Arresters installed on a four-wire solidly grounded system should have their maximum continuous operating voltage (MCOV) rating equal to or greater than the maximum line-to-ground voltage. Consideration should be given to the maximum temporary overvoltage (TOV) of the system (see IEEE Std C62.22-1992).

An ungrounded wye or delta system, during a line to ground fault, will have the two ungrounded phases elevated to phase-to-phase line voltage. In this case, the arrester MCOV should be equal to or greater than the phase-to-phase voltage. IEEE Std C62.22-1992 should be used to select the surge arrester rating.

If a normally grounded system can become ungrounded, a higher rated arrester should be used.

4.3.5 Shielding

Shielding of distribution lines sometimes results from the nearness of tall buildings, trees, or HV lines.

If better shielding is required, the line itself can be shielded with an overhead groundwire on top of the line. This wire should be grounded at every pole. If a neutral is used as an overhead groundwire, it has to be grounded a minimum of three times per kilometer (six times per mile) (see ASC C2-1993). However, it may be desirable to ground this neutral wire more frequently.

On distribution systems where the pole height is less than approximately 15 m (50 ft), the shielding angle is usually between 30–45°.

[8]Information about the references can be found in clause 2.

Copyright The Institute of Electrical and Electronics Engineers, Inc.
Provided by IHS under license with IEEE
No reproduction or networking permitted without license from IHS Not for Resale

5. Switchyard

5.1 Scope

The purpose of this clause is to guide the reader to appropriate methods of protecting equipment, controls, and communication systems within the switchyard against overvoltages resulting from direct strokes and incoming and internally generated surges. Consideration is given to ground potential (voltage) rise and electromagnetic interference (EMI).

5.2 Equipment protection

5.2.1 Direct lightning stroke protection of switchyard equipment

Direct lightning strokes to equipment located in power plant switchyards can cause considerable damage. This equipment should be protected from direct strokes. Such protection has been accomplished by intercepting lightning strokes and diverting them to ground using overhead groundwires and/or masts.

Three basic approaches have historically been used to design the direct stroke shielding of switchyards:

— The empirical method
— The electrogeometric model
— The rolling sphere technique

The empirical method involves either the use of fixed angles or the use of empirical curves. The fixed-angle design method uses the vertical angles between overhead groundwires or masts and the equipment to be protected to determine the number, position, and height of the overhead groundwire and masts (see [B74]). The angles used are determined by the degree of lightning exposure, the importance of the switchyard being protected, and the physical area occupied by the switchyard. For switchyards below 345 kV, an angle of 45° or less has been used between the overhead groundwire or the mast and the equipment to be protected. For switchyards 345 kV and above, an angle of 30° or less has been used. Empirical curves have been developed from field studies of lightning and laboratory model tests. These curves can be used to determine the number, position, and height of shield wires and masts. The curves were derived for different configurations of overhead groundwires and masts and for different estimated shielding failure rates (see [B105]).

The electrogeometric model is a geometrical representation of a facility that, together with suitable analytical expressions, is capable of predicting if a lightning stroke will terminate on the shielding system, the earth, or the protected element of the facility (see [B108]). One of the methods based on the electrogeometric model is known as the rolling sphere technique. The rolling sphere technique involves rolling an imaginary sphere over the surface of the earth up to the switchyard (see NFPA 780-1992, [B76], and [B77]). The sphere rolls up and over all earth potential structures, lightning masts, and overhead groundwires. A piece of equipment is protected from direct strokes if it remains outside the curved surface of the sphere because it is being elevated by the overhead groundwire or the masts. The radius of the sphere (the stroke attractive distance) is determined by the assumed current in the lightning stroke. The stroke attractive distance is calculated to any assumed stroke current by the equation of the electrogeometric model. Several approaches to shielding switchyards from direct strokes have been based on the rolling sphere technique and the electrogeometric model (see [B81], [B89], [B90], [B91], and [B96]).

NOTE—A comprehensive guide to these methods of designing direct stroke shielding of switchyards is being developed in IEEE P998 [B7].

Copyright The Institute of Electrical and Electronics Engineers, Inc.
Provided by IHS under license with IEEE
No reproduction or networking permitted without license from IHS Not for Resale

5.2.2 Incoming surges from transmission and distribution lines

Incoming surge magnitudes are controlled by transmission line design. Methods of limiting the incoming surge magnitudes are discussed in the previous subclauses.

5.2.2.1 Protection of directly connected equipment

Equipment connected directly to the overhead transmission line may require protection considerations. Equipment in this category would be shunt reactors, insulated power cables, wave traps, coupling capacitor voltage transformers, current transformers, voltage transformers, disconnecting switches, circuit breakers, and power transformers.

a) *Shunt reactors.* Internal winding failures in shunt reactors can be considered catastrophic. They usually require major repair involving both time and money. Surge arresters are recommended at the shunt reactor terminals to protect the internal insulation. The procedures for selecting the arrester ratings for the protection of substation equipment as described in IEEE Std C62.22-1992 apply to the protection of shunt reactors.

b) *Insulated power cables.* Breakdown of cable insulation requires extensive outage for repair at high cost. To protect cable circuits from HV surges, surge arresters are usually applied at the line-cable junction. Surge arresters should be capable of dissipating the energy stored in the cable when an overvoltage causes the arrester to discharge the cable (see IEEE Std C62.22-1992).

c) *Coupling capacitor voltage transformers (CCVTs).* The capacitor stack of a CCVT is generally considered self-protecting. Protection installed for an adjacent open breaker will also cover the CCVT. External flashovers across the porcelain do not usually cause any damage. No special protection is needed for these devices. Internal surge protection is generally provided by the supplier for internal parts of the CCVT.

d) *Wave traps.* In general, no phase-to-ground protection is provided for this equipment since flashover would occur at the support insulators with no great consequence. A protective device is installed by the manufacturer across the tuning pack to protect the low-voltage (LV) components.

e) *Voltage and wound-type current transformers.* Internal winding flashovers usually result in permanent damage to these devices. Surge protection is recommended for protection of this equipment. IEEE Std C62.22-1992 describes the selection and application of surge arresters.

f) *Disconnecting switches.* No surge protection is recommended here, since most flashovers to ground will not damage the equipment. These devices may be restored to service following fault clearing. However, consideration should be given to the application of surge protection on any piece of equipment that is switched by a disconnecting switch.

g) *Circuit breakers.* Closed circuit breakers are usually protected by their proximity to the surge arresters used to protect the transformers in the switchyard. A transmission line with a single circuit breaker, operated normally open, should have the breaker protected with either rod gaps or surge arresters. The recommended protection for this application is surge arresters because they are not as affected by environmental conditions. Rod gaps result in line-to-ground faults on the power system. To protect against multistroke lightning during the opening of a circuit breaker, surge arresters could be installed at the breaker or at the line entrance.

h) *Transformers.* The most effective location of surge arresters is at the terminals of the transformer, both on the HV side and LV side bushings. Selection and application of surge arresters to protect transformers are described in IEEE Std C62.22-1992.

5.2.3 Internally generated surges

This subclause discusses generation of switching surges within the switchyard and outlines ways to reduce surges to safe levels.

Copyright The Institute of Electrical and Electronics Engineers, Inc.
Provided by IHS under license with IEEE
No reproduction or networking permitted without license from IHS
Not for Resale

5.2.3.1 Transformer energization

During the energization of transformers, prestrikes may occur depending upon the type of switchgear being used. The resulting transients may be characterized as oscillations with frequencies of about 4 kHz and an amplitude of 0.8 pu. These oscillations may cause overvoltages within the transformer.

If system impedance is resonant to the second harmonic contained in the transformer inrush current, high temporary overvoltages may result. Surge arresters of high energy capability are required to limit these overvoltages.

5.2.3.2 Transformer de-energization

When transformer and reactor combinations are tripped off a bus, multiple breaker reignitions may occur. These reignitions may give rise to oscillations approximated by frequency in the 10 kHz range and amplitude of up to 1.7 pu. In some instances the reactor may be disconnected prior to the transformer de-energization (see [B23]).

When transformer and wye-ungrounded capacitor combinations are de-energized, oscillations with frequencies in the range of 200 Hz and amplitudes of 2.5 pu may be generated. Surge arresters with high energy ratings will be required to limit these surges (see IEEE Std C62.22-1992).

5.2.3.3 Reactor switching

Reignitions are likely to occur when EHV shunt reactors are de-energized with load interrupters. Reignitions will generate frequencies in the range of 200 kHz to 300 kHz and can reach peak values of up to 2.3 pu. They are not expected to cause any damage to the reactor, but they may cause multiple operations of silicon-carbide surge arresters and impair the fault-current interrupting ability of the interrupter (see IEEE Std C37.109-1988 and [B48]).

5.2.3.4 Capacitor switching

De-energizing of any capacitor bank may result in a restrike in the switching device with overvoltages approaching 3 pu. De-energization of ungrounded shunt capacitors with independent pole operation (IPO) breakers, may cause phase-to-ground voltages at the capacitor terminals of up to 3.3 pu and breaker recovery voltages of up to 4.3 pu. Installation of metal-oxide surge arresters at the capacitor terminals will reduce these voltages to safe levels (see IEEE Std C37.99-1990).

5.2.3.5 Line faults

Phase-to-ground faults on lines connected to the station produce oscillatory transients at the station. The frequency of oscillations is determined by the length of the line between the fault and the station. Such oscillations may damage transformer insulation by triggering part winding resonance.

Phase-to-phase faults cause similar oscillations but with much less damping (see [B3], [B30], [B34], and [B95]).

5.2.3.6 De-energizing bus sections with disconnects

Switching surges of up to 2.0 pu with frequencies of 100–200 kHz are likely to occur due to multiple reignitions. These transients may cause multiple operations of silicon-carbide arresters at transmission stations. If these arresters are not rated for such a duty, failures may occur. The replacement of silicon-carbide surge arresters with metal-oxide units, or de-energizing bus sections with breakers, should avoid the problem.

Copyright The Institute of Electrical and Electronics Engineers, Inc.
Provided by IHS under license with IEEE
No reproduction or networking permitted without license from IHS Not for Resale

5.2.3.7 Energizing potential transformers

Recent research performed by EPRI indicates that switching potential transformers with disconnect switches in HV switchyard can result in the occurrence of a partial discharge condition in the potential transformer. The discharges can last for seconds and should be considered hazardous to the insulation system of the potential transformer.

5.2.3.8 Line switching

When energizing lines, significant transients may occur at the far end of the line if line breakers have no closing resistors. If the line is transformer terminated, excessive internal stresses may occur within the transformer due to part-winding resonance; also, longer duration dynamic overvoltages may occur (see [B34] and [B95]).

When de-energizing lines, high switching surges may be caused by breaker restrikes if line breakers are not restrike-free.

5.3 Controls/Communication

5.3.1 Direct lightning strokes

When control cables are run outdoors in an elevated tray system that can be exposed to direct lightning strokes, the trays should have metal covers. The trays should be bonded and grounded at frequent intervals (see NFPA 780-1992).

When control cables are not contained within the confines of the power plant structures but are run in underground troughs or duct systems, the cables are unlikely to be subjected to the effects of a direct lightning stroke.

5.3.2 Incoming surges

A large number of different control and communication circuits are involved in the make-up of a power plant and switchyard. A ground path is also considered to be a circuit and part of a control and communication system. Each circuit has to perform its intended function in an environment that is subject to EMI.

Understanding the different groupings and classifications of communication and control circuits covered by Article 725 of NFPA 70-1993 is necessary (see [B55]).

5.3.2.1 Control systems

A common surge-related problem found in control buildings or facilities within power plants or switchyards results from the close proximity of different power level lines (e.g., 480 V, 125/250 V, and 120 V ac single phase). The surge current and/or voltage will couple to and propagate to low-energy, low-voltage, digital, and analog instrumentation and control signals.

Coupling problems can result when grounding (earthing) lines from protectors are run together or cross with other ground lines, battery return lines, or data lines. The coupling of a surge on the power line to the data lines may cause major equipment malfunctions or down time for repairs.

IEEE Std 518-1982 and IEEE Std 384-1992 should be utilized as guides in developing proper circuit separation and equipment installation requirements.

Copyright The Institute of Electrical and Electronics Engineers, Inc.
Provided by IHS under license with IEEE
No reproduction or networking permitted without license from IHS Not for Resale

5.3.2.2 Communication systems

Communication circuits require transient protection. Protection can be provided by various devices such as a communication protector, communication isolating devices, neutralizing transformers, drainage coils, and fiber optics. All of these are used in conjunction with appropriate shielding and grounding methods (see [B9], [B13], and [B14]).

a) *Fiber-optic communication systems.* Fiber optic cables with nonmetallic armor or strength members are commonly used to isolate communication circuits between two different earth-ground potential points that could cause ground-loop currents. This method of isolation is effective in eliminating incoming switching surges while still ensuring the quality of low-energy, low-voltage data circuits (see IEEE Std 487-1992).

b) *Twisted-pair communication systems.* One way to reduce the effect between two different earth-ground potentials for twisted-pair telephone line systems is to install isolation type "data line protectors." These devices use pure silicon avalanche diode technology. However, a common problem with this scheme is the failure to maintain a low inductance interconnection path between the protector and the multipoint ground system (see IEEE Std 487-1992).

c) *Coaxial cable lines.* Coaxial cable lines are subject to two possible hazards from surge currents flowing in the outer conductors. One hazard is the induced surge voltage that may damage cable dielectric or associated equipment, and the other is the mechanical crushing forces. Small diameter air dielectric cables have been crushed by magnetic forces, but solid dielectric cables and the larger air dielectric cables are sufficiently strong to withstand such forces (see [B31]). The solution to both problems is to provide a low inductance shunt path to ground.

d) *Computer communication lines.* Computer data lines are either twisted pair or coaxial in nature. Because of the shielded/grounded configuration of the coaxial cable, it is normally grounded to the signal ground at each end, which in turn are grounded to the power line neutral and the multi- or single-point ground system. If two different ground locations exist, ground loop currents will flow on the shield (see [B31]).
One method of eliminating this problem is to connect to ground on only one end. The other end of the coaxial cable should be isolated from ground by using a gap-type protector.

5.3.3 Internally generated surges

5.3.3.1 Control systems

Grounding conductors for power system equipment are run between the grounding electrode or grounding grid, electrical devices, racks, building steel, etc., resulting in an equipment multipoint ground system that includes many electrical loops.

Control and instrument circuit grounding systems consist of individual control cabinets and the main instrumentation ground bus interconnected with insulated cable to form radial systems (no loops). It is preferred to provide separate grounding systems for the analog and digital systems. These are isolated from the multipoint ground system except for an interconnection at one point. This is referred to as a single-point ground.

Control and instrumentation circuits are grounded in this way to minimize electrical noise on these relatively LV circuits (see IEEE Std 142-1991 and IEEE Std 518-1982 and [B6]). The equipment (case) ground buses at each cabinet, distinct from the circuit ground, are connected to the local multipoint ground system at convenient locations.

5.3.3.2 Communication systems

Hard-wired communication systems have to be designed to operate in the power plant environment.

Copyright The Institute of Electrical and Electronics Engineers, Inc.
Provided by IHS under license with IEEE
No reproduction or networking permitted without license from IHS Not for Resale

The voice paging public address system is a low-impedance system. The signals are carried in a multiple twisted-pair cable to prevent intrusion of 60 Hz noise, one pair for the page lines and one pair for the party lines. If inadvertent grounds appear on any signal conductor, hum will be introduced into the audio channels.

The telephone communication system depends on the use of a balanced system. Twisted-pair cable with varying lay of twist is used to minimize noise on telephone circuits. The principal parameter for telephone cable is the unbalance capacitance, which will determine to a great extent the amount of electrical noise that can appear across the line (see IEEE Std 487-1992).

The communication circuit grounds for a control building or facility are usually gathered at an isolated ground bus bar located on a communication or telephone backboard. At this point, an insulated ground cable is connected between the isolated ground bus bar and the substation or plant multi- or single-point ground system.

The isolated ground connection for communication and data systems, such as instrument and control systems, should be connected to the multi-point ground system at only one place (see [B6]).

5.3.3.3 Electrostatic discharge

When electrostatic discharge (ESD) occurs between objects, electronic systems located in the vicinity respond unexpectedly to this phenomenon (see IEEE Std C62.47-1992).

ESD can be categorized into “direct” and “indirect” ESD. “Direct” ESD is usually propagated by direct contact between a charged human or metallic body and a metal object. “Indirect” ESD means a radiated discharge phenomenon between two metallic objects with nonconductive contact. When this phenomenon occurs, one metallic object acts as an antenna establishing a relatively strong electrostatic field. The identification of “indirect” ESD is explained in [B86].

To prevent ESD to communication and control equipment antistatic floor material, computer-tile raised floors with pedestals properly grounded, or some other method of eliminating ion generation, should be used.

5.3.3.4 Power requirements

To prevent brownout/blackout, surges, dips, and other power line problems, all critical loads should have a conditioned power supply.

Critical loads are defined as loads that cannot tolerate any disturbance and require adherence to very critical voltage and frequency tolerances. To avoid interruption of communication and control equipment, they are typically powered by batteries or an uninterruptible power supply.

5.3.4 Ground potential rise

Whenever a line-to-ground fault involving a particular power station occurs, a difference in ground potential rise or an induced voltage, or both, may appear between the telecommunications circuits and the station ground.

A hazard may result during a fault from the transfer of voltages between the ground-grid areas of generating plants and switchyards and outside points, by conductors such as communication and signal circuits, LV neutral wires, conduits, pipes, rails, metallic fences, etc. The voltage difference between the switchyard ground and communication conductors may equal or exceed the ground potential rise (GPR) of the station. Voltages on unshielded communication circuits, static wires, pipes, etc. may result in transferred voltages exceeding the sum of the GPRs of both the station near the fault and the source station by the amount of the

--`,,`-`-`,,`,,`,`,,`---
Copyright The Institute of Electrical and Electronics Engineers, Inc.
Provided by IHS under license with IEEE
No reproduction or networking permitted without license from IHS Not for Resale

induced voltage (see 5.3.4.1). For any of the cases discussed in the following subclauses, where induced voltages might exist, the metallic paths should be treated as live and should be clearly labeled as such.

To protect telecommunications circuits and provide the required reliability in carrying out their functions, the magnitude of these abnormal voltages has to be determined. IEEE Std 367-1987 can be used to determine the GPR and the induced voltages. Electrical protection considerations for electric generating station environments are covered in IEEE Std 487-1992.

5.3.4.1 Communication and power circuit coupling

When metallic communication and power circuits run parallel to each other, the circuits may become electromagnetically or electrostatically coupled, and energy may be transferred from the power circuit to the communication circuit. Energy coupling may also occur between communication circuits, causing interference between signal paths. Transients on power circuits may be coupled into telecommunications circuits through the following mechanisms:

a) *H-field coupling (electromagnetic).* H-field coupling is significant when power and telecommunications cables run in parallel. A line-to-ground fault on a power line can induce extremely high voltages on telecommunications circuits within the electromagnetic influence. Methods for reducing electromagnetic coupling include the "*loop area*" of the telecommunications circuit by reducing its length or conductor spacing, separating the source and affected circuits as much as possible, using twisted-pair cable construction, using a metallic conduit raceway, and reducing the fault current at the source (see IEEE Std 384-1992 and IEEE Std 518-1982).

b) *E-field coupling (electrostatic).* E-field coupling is significant only when data and communication lines are not shielded with a grounded metallic shield. Power lines and other sources radiate an electrostatic field, which capacitively couples a voltage to the telecommunications conductors. Methods of reducing the E-field coupling include using shielded twisted-pair cables, grounding neither conductor in a pair, varying the lay of the twist, decreasing the impedance of the circuit, increasing the separation between the noise source and the communication circuit, reducing the length of the parallel course, and reducing the source voltage by shielding the power wiring. The most common method of reducing E-field coupling is the use of shielded telecommunications cables (see IEEE Std 384-1992 and IEEE Std 518-1982).

5.3.4.2 Lightning-induced voltages in control cables

Induced voltages in LV control cables in power stations and substations are sometimes caused by lightning surge currents in the grounding conductor (see [B88]). When a lightning current flows into the ground grid of the switchyard, a transient potential rise of the grid in the immediate area will result. When LV control cable circuits are in the vicinity of such a ground potential rise, the coupled cable potential is distributed in response to the fluctuation of the ground potential rise. [B88] describes recommended suppression for the transient-induced voltages. Use of telecommunications cables equipped with grounded metallic sheaths is the ideal suppression measure for transient-induced voltages. Grounding both ends of unused wire in a control or communication circuit is also an effective measure in reducing transient-induced voltages. To further reduce transient-induced surges, the application of surge arresters or capacitors to the power circuits is also advised.

Lightning exposure can degrade the reliability of critical communication services because they cannot tolerate any disturbance and require adherence to critical voltage and frequency tolerances. communication lines (separate from the power carrier) that provide critical relaying protection should be routed at some distance from the power lines to avoid a stroke concurrently involving the power and communication equipment.

Copyright The Institute of Electrical and Electronics Engineers, Inc.
Provided by IHS under license with IEEE
No reproduction or networking permitted without license from IHS Not for Resale

5.3.5 Electromagnetic interference (EMI)

In this subclause, EMI is being used in the broad sense of the term. There are several factors that are considered from an EMI standpoint: the coupled, conducted, and radiated components of a disturbance. Several types of disturbances that result in EMI are discussed, such as switching operations and ground potential rise due to faults and switching.

5.3.5.1 Coupled and radiated EMI

At frequencies up to approximately 3 MHz, it is convenient to study the effects of these transient voltage surges by dividing them into electrostatic and electromagnetic field effects (see IEEE Std 1050-1991, [B63], and [B101]). The transients being considered in this subclause are induced into control or other LV circuits by

— Electrostatic coupling due to the proximity of HV and LV circuits
— Electromagnetic coupling caused by current flow inducing voltages in adjacent parallel LV circuits
— Electrostatic or electromagnetic coupling through capacitor voltage transformers or current transformers
— Rapid rise in earth potential between a fault location and the location of the LV devices as a function of the impedance between the two locations

At higher frequencies (in the megahertz range), energy may be emitted and collected in the form of radiation. Little quantitative data exists on radiated EMI in substations from all sources. [B5] gives measurements of radiated noise up through 100 MHz from staged switching operations in substations, as well as transients produced when current wave (CW) transmitters were operated. The conclusions from transient field data analysis results were

> Transients are generated with frequency components from several hundred hertz to in excess of 200 MHz. Amplitudes range from very low levels to 70 kV/m and higher. Waveform durations are a function of frequency and range from a few nanoseconds to several milliseconds in duration.

[B63] suggests “a 10 μs transient in the 20 MHz range with an amplitude of 5000 V/m electric and 3 A/m magnetic” might be taken as “typical,” but “would include lower and higher frequency components with respectively different durations and amplitudes.” But this report cautions that higher levels with different frequency content than what was measured for switching may occur for faults.

5.3.5.2 Sources of interference

Under normal conditions in switchyards or incoming transmission lines, some level of corona “noise” can exist. The corona levels may be low enough to cause little or no interference to other electrical equipment, except under foul weather conditions in EHV substations and on EHV transmission lines. Such corona “noise” may be conducted into the switchyard and radiated through it, passing capacitively at a lower level through some equipment. For example, a consideration in modern carrier equipment has been the transmission signal level that may be required to overcome corona noise in foul weather in EHV substations or EHV transmission lines (see IEEE Std 643-1980).

Of more significance in the switchyard is the electromagnetic transient noise produced by such normal activities as opening air disconnect switches and, to a lesser extent, opening circuit breakers. Also, abnormal occurrences such as fault inception, arcing, and clearing can cause very significant “noise” if the fault is in the switchyard or on the line entrance.

Numerous measurements have been made of voltages and currents coupled into lower voltage circuits during switching operations. Magnitudes in the order of tens of kilovolts are not uncommon where means are not taken to reduce coupled voltages and currents.

--`,,`-`-`,,`,,`,`,,`---
Copyright The Institute of Electrical and Electronics Engineers, Inc.
Provided by IHS under license with IEEE
No reproduction or networking permitted without license from IHS
Not for Resale

HV transients have caused insulation of LV devices to fail. Also, false tripping of circuit breakers and misoperation of relays and computers is possible.

The problems associated with HV transients have been aggravated because of the rapid acceptance of solid-state devices for control and measuring and by the use of solid-state relaying systems. These have evolved with solid-state technology and with the use of higher transmission voltages and higher fault currents. The use of cable trenches and open-rack cabling to reduce costs has also contributed to the problem (see [B101]).

The recent addition of high-voltage direct current (HVDC) transmission systems has introduced new aspects to the EMI/EMC problem. A major source of radio frequency (RF) noise can be the firing of the valves in dc converter or inverter terminals. These terminals can produce high levels of carrier frequency noise, which may be a source of interference to power-line carrier and open-wire carrier systems (see IEEE Std 368-1977, [B38], and [B94]).

5.3.5.3 Levels of transient noise

One primary source of transients or spurious signals that are generated within EHV stations is arcing. An arc may result from the opening of an air break disconnect switch, or less often due to a breaker operation or fault conditions that result in the breakdown of the insulation (see [B45]). Such occurrences can induce relatively high voltages in adjacent or nearby control circuits by electrostatic and/or electromagnetic coupling through air, or between potential transformer windings, or through coupling capacitor voltage transformers (see [B35]). Some energy may be transmitted by radiation (see [B63]). Arcing faults can also conductively transmit transients. Faults can cause relatively large shifts of voltage with respect to ground. HV transients can be introduced into control circuits by the difference in ground potential at an arc and at the control house. The difference in ground potential is the result of the impedance drop in the ground circuit during a high-magnitude fault current condition (see [B45]).

High-frequency currents are coupled into the earth mat via circuit or equipment capacitances, such as through CCVTs. Voltage rises may be experienced in the nearby grounds during switching operations with circuit breakers or disconnect switches. The magnitudes of voltages coupled through CCVTs and into unshielded cables can be as much as 10–20 kV, when a bus is switched with a CCVT connected to it (see [B35]). Although frequencies as high as 1–2 MHz were recorded, the frequency range when operating a circuit breaker was in the order of 100 kHz. Lower voltage magnitudes were measured several hundred meters away within a shielded control and relay room.

The maximum magnitudes of the induced voltages range from a few volts up to as much as 20 kV (see [B101]). Several IEEE technical papers give tables of voltages of the results of tests with disconnect switch operations (see [B68] and [B98]).

Another source of high-frequency transient currents is HV capacitor switching, especially back-to-back switching. As the result of capacitor switching, high-frequency currents circulate through the grounds and the buses between the capacitor banks. Significant voltages induced by the fields from such currents may be coupled into control and instrument cable if care is not taken to reduce this effect (see IEEE Std C37.99-1990).

The frequencies of the transient oscillations can be the natural frequencies of the elements in the disturbing circuit, i.e., the inductance and capacitance of a bus or capacitances of circuit breakers, potential and current transformers, and CCVTs. These frequencies have been measured at 800 kHz and above (see [B45]). Observed values of frequency range from 50–300 kHz for line disconnect switch operations, 300–600 kHz for bus disconnect switch operations, and 300–2000 kHz for LV switches. Damping in general is high for such transients with the result that the magnitudes are down to half-value after four cycles of the high frequency oscillation (see IEEE Std 1050-1991 and [B68]). The frequency of the induced voltage may start in these ranges of frequencies, but with time will increase into the megahertz range, presumably due to the natural frequency of the circuit into which the transient is being induced.

--`,,`-`-`,,`,,`,`,,`---
Copyright The Institute of Electrical and Electronics Engineers, Inc.
Provided by IHS under license with IEEE
No reproduction or networking permitted without license from IHS
Not for Resale

5.3.5.4 Circuits and devices at risk

Voltages with high enough magnitude to flash over LV lighting and control circuits have occurred where protective measures were not taken. Other equipment sensitive to EMI are those that include active (switched "on") electronic devices, including transistors and integrated circuits, and passive (switched "off") electrical and electronic components that have low power or LV ratings, such as semiconductor diodes. Also to be considered are low-power or high-speed digital processing systems and digital memories (susceptible to operational upset).

It has been recognized for some time that transient voltages and currents are induced into LV control circuits by the power circuit (see [B16] and [B85]), and they can endanger electronic components such as silicon- and avalanche-type semiconductors (see [B61], [B67], and [B73]). Also, signals from portable or mobile VHF and UHF radio transmitters have caused misoperation or "upset" to solid-state circuits (see [B42]). Leased lines for supervisory, telemetering, and alarm circuits are known to have introduced transients into station control battery circuits, causing false operation of solid-state equipment. Metallic wire-line communication circuits used for supervisory control and data acquisition (SCADA) and relaying can also introduce transients into the station control battery supplying these circuits. These voltages may cause damage or false operation of the electronic equipment if proper consideration is not given to grounding, shielding, and application of various forms of surge protection. Incorrect relay operation may also result (see IEEE Std C37.90.2-1987, [B61], and [B73]).

The reliability of solid-state electronic equipment in the environment of HV and EHV switchyards has been improved by manufacturers with use of the surge withstand capability (SWC) tests (see IEEE Std C37.90-1989, IEEE Std C37.90.1-1989, and [B41]). With a known level of surge protection "built in" to the equipment, as based on a SWC test, it then becomes the responsibility of the user to provide the protection to ensure that this level is not exceeded.

5.3.5.5 Protective measures and devices for EMI

5.3.5.5.1 Effect on EMI by proper grounding in switchyards

Grounding is one of the most effective measures for controlling EMI. Absolute security for switchyard controls becomes complex and difficult at high frequencies. Because the travel time of 0.305 m (1 ft) of cable is approximately 2–4 ns, lead lengths are of concern at frequencies in the range of several hundred megahertz. Therefore, EMI grounding requirements can be more difficult than those for lightning or for safety.

Industry recommendations observe a practice of single-point grounding of signal-carrying circuits to eliminate induced circulating current that would otherwise be present if multipoint grounding were used (see IEEE Std C57.13.3-1983, [B15], and [B93]). In recent switchyard construction, especially for EHV switchyards, shielded cable is used to reduce induced disturbances.

5.3.5.5.2 Coupling capacitor voltage transformers (CCVTs)

As previously indicated (5.3.5.3), CCVTs can conduct large high-frequency transient currents to ground during a disconnect switch operation. The shielded cable from the output of the CCVT secondary should be run as close as possible to the physical power grounds. The shield should be grounded at the base of the CCVT, or other precautions should be taken (see [B68], [B72], and [B106]).

5.3.5.5.3 Cable shielding, grounding, and routing

IEEE Std 525-1992 divides cabling into three classifications: LV power cables, control cables, and instrumentation cables. Control cables are used for intermittent operation to change the state of a utilization device within the switchyard auxiliary system. Instrumentation cables are used to transmit variable current or voltage signals or coded information in the form of digital pulses.

Copyright The Institute of Electrical and Electronics Engineers, Inc.
Provided by IHS under license with IEEE
No reproduction or networking permitted without license from IHS Not for Resale

Routing of the several classes of cable should be carefully considered (see IEEE Std 525-1992 and [B72]), especially with respect to ground system layout (see [B101]).

Most of the references suggest that shielded cables can be used in switchyards, especially extra high voltage. How the shields of these cables are grounded is open to a number of considerations (see IEEE Std 1050-1991 and [B72]).

For more detailed information on grounding shielded cable, see 5.3.4.

5.3.5.5.4 Protective devices

Surge-protective packs of capacitors have been commonly applied or “built in” as integral to the input terminals of sensitive electronic equipment for surge protection. Results of measurements in the literature indicate that such devices are efficient in reducing transient voltages. These results also indicate that the leads to such devices can be a major factor in high-frequency surge reduction. There is a resonance frequency associated with the protective capacitor, above which the capacitor may appear inductive. Energy losses are associated with resonance (see [B109]).

A transient suppressor may be connected where the dc wiring from a station battery enters the terminal connections to solid-state equipment. The application of any transient surge suppressor should consider the effect on the control function. Ferrite toroids have been placed around ac current and voltage wiring to solid-state devices to provide high-frequency damping. Transient suppressors should be used across inductive circuits but should not degrade the operating and releasing time of such devices as the relays (see [B60]).

5.3.5.5.5 Communication circuit protection

Wire communication circuits are used for control and relaying in power stations. Faults in the power system induce voltages and currents in the wire communication circuits at a time when they may be needed for the protective function for which they were applied. Fiber-optic communication circuits may relieve some of these problems.

Various protective devices have been used for protection of communication circuits. Among these are air gaps (IEEE Std C62.35-1987); gas tube protectors (ANSI C62.61-1985) and IEEE Std C62.42–1992); varistors (IEEE Std C62.33-1982) designed with a specific breakdown voltage and with short-circuiting or grounding relays to limit discharge current through the protector; insulating or isolating or neutralizing transformers, drainage coils, transformers, or mutual reactors to reduce longitudinal steady state or transient induction (see [B9], [B13], and [B14]); and solid-state isolators or combinations of any of these.

NOTE—The use of some surge-protective devices in communication circuits, such as air gaps and gas tubes, may result in compromising the reliable operation of the protective relay systems.

5.3.5.6 Shielding, grounding, and penetration of control buildings

Regardless of the ultimate level of shielding, properly planned utility services and grounding schemes are also required to ensure low circuit noise level.

5.3.5.6.1 Shielding

Some control buildings do not require supplemental shielding or lightning protection due to their construction and location. A common form of building construction using concrete block provides little or no shielding properties except that possibly provided by the reinforcing steel bar.

The location of a control building approximately 100 m (33 ft) away and lateral to overhead transmission lines in the switchyard provides some “inherent structural shielding” from arcing disconnects. This conclu-

--`,-`-`,,`,,`,`,,`---

Copyright The Institute of Electrical and Electronics Engineers, Inc.
Provided by IHS under license with IEEE
No reproduction or networking permitted without license from IHS Not for Resale

sion is explained in [B57]. Earth by itself is known to provide significant shielding at high frequencies, but the shielding capacity diminishes at lower frequencies. The calculations are outlined in [B97].

A lightning protection system has the function of intercepting a lighting discharge before it can strike the object protected and then discharging the lightning current to the multipoint ground system. NFPA 780-1992 defines the requirements for a lightning protection system.

Attention has to be given to the nature of the contents of the building and the susceptibility to damage by induced lightning currents. Control building design becomes complex, with special interface requirements for electrical power, air handling equipment, fire alarm, security, and communication systems.

5.3.5.6.2 Grounding

a) *Single-point guidelines for a multipoint grounding system.* To establish an interference-free reference ground system for a control building (i.e., twisted pair or coaxial), the wiring for computer equipment, communication, and control systems serviced within the building should be connected to the multipoint ground system in only one place. These guidelines are outlined in [B6].
However, the single-point ground connection to the multipoint ground may become impractical for large facilities because of high inductance of long conductors at high frequencies. Providing a low inductance signal reference ground mesh under interconnected sensitive equipment may mitigate possible interference.

b) *Safety grounding requirements.* A single connection between the power distribution system to the ground grid is necessary to meet the safety grounding requirements. This will minimize the effects of unbalanced and power fault current flowing with the low-energy LV signal currents through a common impedance. When the ac distribution system involves many distribution panels, isolation of the ac ground fault return lines from the ground grid is very effective in reducing many noise problems. This is also explained in [B6].
ANSI C2-1993 is the only document most utilities recognize for facilities and equipment located in switchyards.

c) *Communication lines.* The radial grounding connections to computer, communication, and control equipment should be properly gathered and connected to the same multipoint ground system as the lightning system ground, the control system signal reference, and the power safety grounds.

d) *Penetrations—other miscellaneous utilities.* Water lines that provide convenience facilities to buildings should either be isolated (by providing a section of insulating pipe or equivalent to interrupt the contiguous section of metal pipe into the facility) or should be properly grounded.
The metal portion of the pipe should be grounded at the same single point as defined in NFPA 70-1993.

6. Power plant

6.1 Scope

The purpose of this clause is to discuss the different methods of protecting equipment, controls, and communication systems within the zone of protection of the power plant structure against overvoltages resulting from direct strokes and incoming and internally generated surges. Consideration is given to potential (voltage) rise and EMI.

Copyright The Institute of Electrical and Electronics Engineers, Inc.
Provided by IHS under license with IEEE
No reproduction or networking permitted without license from IHS Not for Resale

6.2 Equipment protection

6.2.1 Direct lightning strokes

This subclause covers protection of power plant equipment from direct lightning strokes to the equipment.

6.2.1.1 Indoor equipment

For those plants with the turbine-generator, boiler, reactor, etc. located within a power plant or containment structure, much of the electrical equipment will be located indoors. Thus, the equipment is not subject to direct lightning strokes. The power plant structure intercepts the lightning strokes and conducts them safely to ground through the structure ground grid. Guidance for protection of structures can be found in NFPA 780-1992 and IEEE Std 665-1987.

Indoor electric equipment is subject to incoming surges conducted to the equipment by electrical conductors (cabling, bus, etc.), building steel, and plant ducting and piping. Protection against these incoming surges is addressed in 6.2.2.

6.2.1.2 Outdoor equipment

At those plants where the turbine generator, boiler, etc. are located outdoors, the equipment should be shielded from direct lightning strokes. The equipment can be shielded from direct strokes using masts, overhead ground wires, or adjacent structures (see NFPA 780-1992). If the equipment is not shielded, adequate shielding should be provided and connected to the ground grid. Also, see 5.2.1 for grounding and shielding of outdoor equipment.

6.2.2 Incoming surges

This subclause addresses the effects of the surges coming to the generating plant, including the sources of the incoming surges as well as the need to protect plant equipment from the incoming surges.

An electric power generating plant uses a large variety of electrical power apparatus as well as control and instrumentation equipment. See figure 2. The following types of equipment may be subject to incoming surges:

- Transformers, including the main step-up, unit auxiliaries, and start-up
- Generator to main step-up transformer connection
- Rotating machinery, including the generator and motors
- Medium voltage switchgear
- Feeders to remote ancillary equipment
- Control, instrumentation, and telecommunications equipment with connections to other equipment outside the plant

This equipment is essential for generating plant operation, and its continuous availability and security from damage by surges is of the highest design priority. Protection of the equipment from potentially damaging incoming surges should be carefully considered in the design of the power plant.

6.2.2.1 Sources of incoming surges

See figure 1. There are many potential sources of incoming surges to the power plant, such as direct lightning strokes due to shielding failure in the switchyard, in the vicinity of the plant, or in remote ancillary equipment. Switching operations in the switchyard or by the generator breaker, if used, may produce incoming surges to the equipment listed in 6.2.2.

Copyright The Institute of Electrical and Electronics Engineers, Inc.
Provided by IHS under license with IEEE
No reproduction or networking permitted without license from IHS Not for Resale

6.2.2.2 Protection of equipment from incoming surges

6.2.2.2.1 Transformers

Incoming surges are likely at the HV terminals of the main step-up transformer and the start-up transformer. These transformers should be provided with surge arresters installed “electrically” as close as possible to the HV side bushings. When the secondary feeds a section of overhead line, appropriate arresters should be considered.

6.2.2.2.2 Rotating machines

Incoming surges can be transferred through transformers by electrostatic and electromagnetic coupling. Therefore, surge voltages can be experienced on the plant electrical auxiliary secondary system and also at the generator terminals as a result of surge voltage impulse on the main or start-up transformer primary system. This can occur even though the transformer is protected with arresters at the primary terminals (see [B70]). Protection of generators is described in more detail in 6.2.3.

6.2.2.2.3 Switchgear

There is generally no need to provide surge protection on the medium- and low-voltage switchgear buses for incoming surges to the plant. Usually the only exposure of the metal-clad switchgear to lightning is through one or more power transformers. When the power transformer has adequate surge protection on the HV side, there is generally no necessity to provide surge arresters on the LV side of the transformer connected to the switchgear. Experience has shown that over the various transformer sizes normally encountered in power plants, there is usually not enough surge transfer through the transformer to be harmful to the metal-clad switchgear (see IEEE Std 141-1993). Furthermore, each switchgear bus normally has multiple feeder circuits connected to it. Any incoming surge is divided among the circuits in inverse proportion to their surge impedances. Consequently, the surge voltage magnitudes on the buses are greatly reduced.

6.2.2.2.4 Controls, instrumentation, and telecommunications equipment

Protection of power plant control and communication equipment from incoming surges is described in 6.3.

6.2.3 Internally generated surges

This subclause addresses surges generated within the generating plant power system. Sources of internally generated surges and the need to protect plant equipment from these surges are addressed in this subclause.

A generating plant utilizes a wide spectrum of electrical equipment, such as

- Rotating machinery, including generators and motors
- Transformers
- Distribution buses, including switchgear, motor control centers, and power panels
- Rectifier chargers and inverters

Protection of this equipment from potential damaging overvoltages deserves careful consideration in power plant design.

6.2.3.1 Sources of internally generated surges

There are several potential sources of internally generated surges on power plant electrical systems (see [B70]). Typical sources of internally generated surges are

Copyright The Institute of Electrical and Electronics Engineers, Inc.
Provided by IHS under license with IEEE
No reproduction or networking permitted without license from IHS Not for Resale

— Capacitance switching
— Fault interruption by a vacuum interrupter or fuse
— Insulation breakdown
— Motor starting

6.2.3.1.1 Capacitance switching

Capacitance switching can cause steep front surges. It is possible for capacitor switching devices to restrike in the course of interrupting the capacitive current that goes through current zero when the voltage is at maximum (see IEEE Std 18-1992 and [B71]). Steep front surges of two to three times line-to-neutral voltage can result. Since capacitor banks are usually switched from a bus serving several loads, such surges will normally be reduced by refraction at successive feeder junctions to the bus.

The surges propagated to machines connected to feeders will frequently be reduced to half, or less, of the source value (see IEEE Std 141-1993). If capacitor switching is a concern, then there are a number of mitigating measures that can be considered.

6.2.3.1.2 Fault interruption by a vacuum interrupter or fuse

Another source of overvoltage can be produced when a current-limiting fuse or vacuum interrupter forces a current zero (current chopping) (see [B32]). The surges produced can be steep due to restriking. Such surges may be reduced in magnitude by refraction at junctions before reaching a machine. If the interrupter or fuse is directly in the supply and close to the machine, the surge may be imposed on the machine windings with little attenuation.

6.2.3.1.3 Insulation breakdown

Insulation failures are a source of steep front surges. When an insulating component becomes overstressed and fails, a surge will originate at the failure with a magnitude equal to the voltage change, characteristically two to three times the line-to-neutral voltage with a surge front of 0.1 μs or less. Such a surge, although rare, may produce a stress on the insulation of transformers and multiturn machines. Faults on ungrounded bus systems, when accompanied by multiple interruptions and restrikes, can increase the surge magnitude significantly to nearby insulation systems (see [B22] and [B107]).

6.2.3.1.4 Motor switching

Motor starting can create steep front surges. The most severe locally generated surges imposed on motors are usually generated by the motor starter itself when the motor is energized through a cable from a bus that has other cables connected to it. Values of several microhenries of motor feeder cable inductance and several hundred picofarads of bus-connected capacitance result in an oscillatory LC circuit with a natural frequency $[f_o = 1/(2\pi\sqrt{LC})]$ in the region of high hundreds of kilohertz to low megahertz. Field measurements during energizing of motors show surge fronts with as little as 0.1 μs to crest and crest magnitudes approaching twice the normal line-to-neutral voltage. The greater the capacitance connected to the bus, the more nearly the crest approaches twice normal and the slower the surge front.

A study has determined that a 2.82 pu maximum prestrike voltage on the third breaker pole closing can produce motor terminal voltage surges between 2 pu and 5 pu. Although the probability of obtaining the 2.82 pu prestrike voltage is one in a million, daily switching of a motor over a 30-year period or breakers with pole misalignment can increase the risk significantly (see [B53] and [B54]).

Motor de-energizing at normal operating speed does not usually produce dangerous surges. The improved metallurgy of vacuum contacts (i.e., chromium-copper) has reduced the tendency of vacuum switching devices to chop current. However, given specific conditions of capacitance and inductance, overvoltages may be produced by reignitions that occur during switching of motor locked rotor currents (see [B99]).

Copyright The Institute of Electrical and Electronics Engineers, Inc.
Provided by IHS under license with IEEE
No reproduction or networking permitted without license from IHS Not for Resale

6.2.3.2 Protection of equipment from internally generated surges

6.2.3.2.1 Rotating machinery

When HV surges are internally generated, the standard protective circuit for multiturn rotating machines consists of arresters and capacitors located near the machine terminals (see [B70]). The function of these arresters is to limit the magnitude of the voltage to ground, while the capacitors lengthen the time to crest and the rate of rise of voltage at the machine terminals. Consideration for the use of a surge capacitor will be influenced by the steepness of the voltage surge arriving at the terminals of the rotating machine.

In 1990, an EPRI report indicated that, in most cases, motor and generator protection is not required (see [B65]).

6.2.3.2.2 Transformers (other than the unit auxiliaries and start-up transformer)

Normally, surge arresters are not needed for those transformers in the plant auxiliary systems that are subjected only to internally generated surges. The incoming surges are attenuated through transformers connected to the external transmission system. See figure 2.

Dry-type transformers may have a lower basic lightning impulse insulation level (BIL) than oil-insulated transformers of the same voltage class. Their surge protection should be evaluated if there is a possibility that the transformers may be subjected to internally generated surges.

LV distribution and lighting transformers generally are not connected to overhead distribution circuits and do not require surge protection. Exceptions to this may be obstruction lighting, security systems, etc. This may require special considerations to the application of surge protection, grounding, and bonding.

6.2.3.2.3 Switchgear, motor control centers, and other distribution buses

There is no need to provide surge protection on distribution buses that are not directly connected to overhead distribution lines, since surge magnitudes are much reduced and below the insulation level of the switchgear.

6.2.4 Ground potential rise

The electric generating plant is often connected to the switchyard or transmission system by a large step-up transformer, with the HV side neutral grounded to the power plant ground grid system. This common configuration presents essentially the same considerations as 5.3.4.

6.3 Controls/Communication

6.3.1 Direct lightning strokes

The control circuits of the modern power plant are normally within the confines of the structures or building. Usually the structures inherently provide a high degree of shielding against the effects of a direct lightning stroke. Shielding may also be provided by the conduit or the tray system if the control cables extend beyond the confines of the power plant building.

If the control cables are run outside the building in a tray system that can be exposed to direct lightning strokes, then these trays should have metal covers. The trays should be grounded at frequent intervals.

If the control cables are not contained within the confines of the power plant structures but are run in underground troughs or duct systems, the cables are unlikely to be affected by direct lightning strokes. This statement is conditioned on the proper installation of the grounding and shielding system in the power plant.

Copyright The Institute of Electrical and Electronics Engineers, Inc.
Provided by IHS under license with IEEE
No reproduction or networking permitted without license from IHS
Not for Resale

6.3.2 Incoming surges

This subclause covers protection of power plant control and communication cables and equipment from entering surges that originate from lightning, switching, and ground faults outside the power plant.

6.3.2.1 Characteristics of incoming surges

Transient overvoltages include those caused by surge currents in the power bus conductor, as well as those caused by lightning surge currents in the grounding conductor. Transient-induced voltages in control cables produced by surge currents in the grounding conductor pose the greatest threat to the insulation integrity.

Experience has shown that these sources tend to induce only oscillatory transients, whereas surge sources within the control circuit produce both oscillatory and unidirectional surges depending on circuit conditions. Therefore, the emphasis is on oscillatory surges for incoming types. Published data indicate voltage magnitudes exceeding 10 kV over a range of frequencies from 5 kHz to 5 MHz. IEEE Std C62.41-1991 suggests a representative wave shape as a 0.5 μs–100 kHz ring wave.

6.3.2.2 Coupling of incoming surges

When the power plant structure is hit by a lightning stroke, the lightning surge current flows through the lightning rods or steel structure to the main ground grid. This causes a momentary potential fluctuation, and there is a transient rise in the apparent grounding impedance. The grounding impedance for transients is frequently raised by a factor of ten or more than the power system fundamental frequency impedance.

6.3.2.3 Protection

Wiring techniques, grounding, and bonding techniques can mitigate the effects of incoming transients on the control and instrumentation equipment. Transient-induced voltages in control and communication type circuits can be suppressed to 10% or less by equipping the cables with metallic sheaths. If cables are not equipped with metallic sheaths, transient-induced voltages can be suppressed by grounding both ends of an unused wire in the cable. The transient voltage can be reduced to about 40% in comparison to a conductor in which an unused wire is not grounded (see IEEE Std 143-1994).

Surge suppressors may be used, but application at all points of the LV control systems is not practical. In addition to applying surge-protective devices (SPDs), the use of a capacitor as part of the equipment protection system is effective in mitigating and sloping the wave front of a transient-induced voltage.

Protection against catastrophic failure of control and instrumentation equipment has been provided by interrupting power to the device when a voltage sensor detects an overvoltage transient. The required fast speed of response was obtained by detecting the transient with a zener diode, which turns on an SCR to short-circuit the power feed line (voltage-switching, surge-protective device, or “crowbar”). Power-line circuit breakers, fuses, or current-limiting devices have to function to prevent damage due to a short circuit.

The use of voltage-switching, surge-protective devices (crowbars) are not recommended for critical facilities like power plants because they will degrade reliability. An exception is the use of these devices in conjunction with other protective equipment, such as neutralizing and drainage transformers in communication circuits.

6.3.3 Internally generated surges

This subclause describes the protection of power plant control and communication equipment from internally generated surges within the power plant.

-`,-`-`,,`,,`,`,,`---
Copyright The Institute of Electrical and Electronics Engineers, Inc.
Provided by IHS under license with IEEE
No reproduction or networking permitted without license from IHS Not for Resale

6.3.3.1 Control systems

Insulation coordination for LV control equipment within the plant control system is classified by NEMA ICS 1-1993 into four transient voltage categories. These are defined as primary supply, distribution, load, and signal level.

The transition from one overvoltage category to the next lower category (from one impulse withstand voltage level to a lower impulse withstand voltage level) can result from the operation of the transient-limiting device or surge-protection device performing its interface function.

6.3.3.2 Control equipment

Control equipment should be designed and tested to acceptable transient overvoltage conditions in accordance with applicable standards to eliminate flashovers or disruptive discharges (see IEEE Std C37.90-1989, IEEE Std C37.90.1-1989, NEMA ICS 1-1993, NEMA ICS 2-1993, and NEMA ICS 3-1993).

The control equipment, consisting of a redundant nonlinear switching power supply servicing a redundant nonlinear processor, is equipped with transfer selection features that compare the sine wave between the preferred (uninterruptible power source) and the alternate power supply source servicing the redundant nonlinear power supply. The high-speed transfer, usually within a quarter cycle, will generate low-level switching surges and harmonic currents. Localized harmonic filtering at the source by the equipment manufacturers is the best method for limiting the effects of harmonics (see IEEE Std 519-1992 and IEEE Std C57.110-1986).

Control equipment with nonlinear switching power supplies should be specified to have an isolation transformer with an electrostatic shield to reduce switching surges (see NEMA ICS 1-1993). Consideration should be given to referencing control systems consisting of processors and printers to the same uninterruptible power source to prevent a potential difference between the processor and the printers when maintenance testing or trouble-shooting is done using an oscilloscope (see NEMA ICS 2-1993).

6.3.3.3 Communication equipment

Properly designed surge-protective devices should not disturb the operation of protected equipment. Surge protectors installed on communication equipment can be used continuously at their specified maximum voltages, frequencies, and temperatures without undesirable signal distortion, power loss, or failure (see IEEE Std 519-1992).

6.3.4 Ground potential rise

As in the case of the switchyard, telecommunications and control circuits enter power plants to provide a variety of services. If the neutral ground of the plant main step-up transformer is connected to the plant ground grid, essentially the same considerations discussed in the ground potential rise subclauses of clause 5 have to be considered.

Plant electrical systems may expose the grounding system to direct lightning strikes, such as overhead cables connected to the step-up or start-up transformers outside the plant. Transient-induced voltages may be introduced in LV control and telecommunications circuits by lightning surge currents in the ground grid. These considerations are essentially the same as in 5.3.4.

6.3.5 EMI

In this subclause, EMI is used in the broad sense of the term, considering several types of disturbances that may result in EMI such as switching operations and ground potential rises due to faults and switching. There are several EMI effects that are considered: the coupled, conducted, and radiated effects of a disturbance.

Copyright The Institute of Electrical and Electronics Engineers, Inc.
Provided by IHS under license with IEEE
No reproduction or networking permitted without license from IHS Not for Resale

6.3.5.1 Coupled and radiated EMI

At frequencies up to approximately 3 MHz, it is convenient to study the effects of transient voltage surges by dividing them into electrostatic and electromagnetic field effects (see IEEE Std 1050-1991, [B63], and [B101]). The transients considered in this guide are introduced into control or other LV circuits by

- Electrostatic coupling due to the proximity of HV and LV circuits
- Electromagnetic coupling caused by currents inducing voltages in adjacent parallel LV circuits
- Electrostatic or electromagnetic coupling through capacitor voltage transformers or current transformers
- Rapid rise in earth potential between a fault location and the location of the LV devices

At frequencies in the megahertz range, energy may be emitted and collected in the form of radiation. Little quantitative data exists on radiated EMI from all sources. [B5] gives measurements of radiated noise up through 100 MHz from staged switching operations in substations, as well as transients produced when continuous wave transmitters were operated. The conclusions from transient field data analysis results were

> Transients are generated with frequency components from several hundred hertz to in excess of 200 MHz. Amplitudes range from very low levels to 70 kV/m and higher. Waveform durations are a function of frequency and range from a few nanoseconds to several milliseconds in duration.

[B63] suggests “a 10 μs transient in the 20 MHz range with an amplitude of 5000 V/m electric and 3 A/m magnetic” might be taken as “typical,” but “would include lower and higher frequency components with respectively different durations and amplitudes.” But this report cautions that higher-level faults may occur with different frequencies than were measured for switching.

6.3.5.2 Sources of interference

Under normal conditions in power plants, some level of corona “noise” can exist but may be at levels low enough to cause little or no interference with other electrical equipment. Such corona “noise” may be conducted and radiated through the power plant and pass capacitively at a reduced level through some equipment.

Of more significance is the electromagnetic transient noise produced by such normal activities as opening circuit breakers. Also, abnormal occurrences such as fault inception, arcing, and clearing can cause significant “noise” if the fault is within the power plant premises.

Numerous measurements have been made of voltages and currents coupled into lower voltage circuits during switching operations. Magnitudes in the order of tens of kilovolts are not uncommon where means are not taken to reduce coupled voltages and currents.

HV transients have caused insulation of LV devices to fail, false tripping of circuit breakers, and misoperation of relays and computers.

The problems of HV transients have been aggravated by the rapid acceptance of more susceptible solid-state devices for control and measuring equipment and circuits, and the use of solid-state relaying systems. Concurrently, system growth has brought higher transmission voltages and fault currents (see [B101]).

6.3.5.3 Levels of transient noise

A frequent source of transients or spurious signals generated within power plants is from arcs caused by switch opening and less often due to a breaker operation or insulation breakdown (see [B45]). Such occurrences can induce relatively high voltages in adjacent or nearby control circuits by electrostatic and/or electromagnetic coupling through air or between potential transformer windings (see [B35]). Some energy may

Copyright The Institute of Electrical and Electronics Engineers, Inc.
Provided by IHS under license with IEEE
No reproduction or networking permitted without license from IHS Not for Resale

be transmitted by radiation (see [B63]). Arcing faults can also generate transients. Faults can cause relatively large shifts of phase voltage with respect to ground. HV transients can be introduced into control circuits by the difference in ground potential caused by the impedance drop in the ground circuit during a high-magnitude fault current condition (see [B45]).

Voltage rises can be experienced in the nearby grounds during switching operations with circuit breakers. High-frequency current may be coupled into the ground mat through the phase-to-ground-mat capacitance. The frequency range in operating a circuit breaker is in the order of 100 kHz. Lower voltage magnitudes have been measured several hundred meters away within a shielded control and relay room. The maximum magnitudes of the induced voltages range from a few volts up to as much as 20 kV (see [B101]).

The frequencies of the transient oscillations can be the natural frequencies of the elements in the disturbing circuit, i.e., the inductance and capacitance of a bus, or capacitances of circuit breakers, potential and current transformers, and CCVTs. These frequencies have been measured at 800 kHz and above (see [B101]). Observed values in the frequency range of 300–2000 kHz for LV switches have been recorded. Damping is usually high for such transients, with the result that the magnitudes are down to half-value after four cycles of high-frequency oscillation (see IEEE Std 1050-1991 and [B68]). The frequency of the induced voltage may start in the kilohertz range of frequencies, but with time it will increase into the megahertz range, presumably due to the natural frequency of the circuit into which the transient is being induced.

6.3.5.4 Circuits and devices at risk

Voltages of high enough magnitude to flash over LV lighting and control circuits have occurred where protective measures were lacking. Other equipment sensitive to EMI include active (switched “on”) electronic devices, such as transistors and integrated circuits, and passive (switched “off”) electrical and electronic components with low-power or LV ratings, such as semiconductor diodes. Also susceptible to operational upset are low-power or high-speed digital processing systems and digital memory.

Transient voltages and currents induced into LV control circuits by the power circuit (see [B16] and [B85]) have been known to endanger such electronic components as silicon- and avalanche-type semiconductors (see [B61], [B67], and [B73]). Signals from portable or mobile VHF and UHF radio transmitters, and even hand-held walkie-talkies, have caused misoperation or “upset” to solid-state circuits (see [B42]). Metallic communication circuits that enter the plant to provide communication channels for supervision, telemetering, and control have introduced transients into control battery circuits supplying these circuits, causing false operation of solid-state equipment. Metallic wire-line communication circuits used for SCADA and relaying can introduce transients into the control battery systems supplying these circuits. These voltages may cause damage or false operation to electronic equipment. They may also cause an incorrect relay operation if proper consideration is not given to grounding, shielding, and the application of surge-protection devices (see IEEE Std C37.90.2-1987 and [B61]).

6.3.5.5 Protective measures and devices for EMI

6.3.5.5.1 Effect of grounding on EMI

Grounding is one of the most important measures for controlling EMI, but it becomes more complex and difficult to apply with the increase of frequency ranges that are involved. The travel time of 0.305 m (1 ft) of a lead is approximately 1 ns. At EMI frequencies in the range of several hundred megahertz, wave lengths are about 1 m (3 ft) and lead lengths become a concern. Therefore, EMI grounding requirements can be more difficult than those for lightning or for safety.

Industry practices recommend single-point grounding of signal-carrying circuits to eliminate induced circulating current that would otherwise be present with multipoint grounding (see IEEE Std C57.13.3-1993 and [B93]). More recently, the use of shielded cable has become prevalent to reduce induced disturbances.

Copyright The Institute of Electrical and Electronics Engineers, Inc.
Provided by IHS under license with IEEE
No reproduction or networking permitted without license from IHS Not for Resale

6.3.5.5.2 Shielding, grounding, and routing of cables

IEEE Std 525-1992 divides cabling into three classifications: LV power cables, control cables, and instrumentation cables. Control cables are used to transmit intermittent signals to change the state of the utilization device(s). Instrumentation cables are used to transmit variable current or voltage signals or coded information in the form of digital pulses. This standard also discusses grounding and shielding requirements and considerations of each class.

Routing of the several classes of cable should be carefully considered, especially with respect to the proximity to and the layout of associated grounding systems (see IEEE Std 525-1992, IEEE Std 1143-1994, and [B72]).

6.3.5.5.3 Protective devices

Surge-protective packs of capacitors have been commonly applied to or “built in” to the input terminals of sensitive electronic equipment. Results of measurements given in the literature indicate the efficiency of such devices to reduce transient voltages. These results also indicate that the leads to such devices can be a major limitation in high-frequency surge reduction. There is a resonance associated with the capacitor beyond which the capacitor may appear inductive with associated energy losses (see [B109]).

A surge-protective device may be connected where the dc wiring from a station battery connects to solid-state equipment. The application of transient surge suppressors should not interfere with the control function. Ferrite toroids have been placed around ac current and voltage wiring to solid-state devices to provide high-frequency damping. Transient suppressors should be used for shunting inductive circuits but should not deteriorate the operating and releasing time of the relays (see [B60]).

6.3.5.5.4 Communication circuit protection

Wire communication circuits are used for control and relaying in power plants. Heavy faults in the power system may induce voltages and currents in the communication circuit at precisely the time when they may be needed for circuit protection. Fiber-optic communication circuits are free from these problems.

Various devices have been used to protect metallic communication circuits from surges. These include: air gaps (see IEEE Std C62.35-1988); gas tube protectors (see ANSI C62.61-1993 and IEEE Std C62.42-1992); varistors designed with a specific breakdown voltage with short-circuiting or grounding relays to limit discharge current through the protector (see IEEE Std C62.33-1982); insulating, isolating, and neutralizing transformers; drainage coils; mutual reactors to reduce longitudinal steady-state or transient induction (see [B9], [B13], and [B14]); and solid-state isolators or combinations thereof.

NOTE—The use of some surge-protective devices in communication circuits, such as air gaps and gas tubes, may result in compromising the reliable operation of the protective relay systems.

6.3.5.6 Shielding and grounding of power plant buildings

6.3.5.6.1 Shielding

Shielding is a lightning protection system that has the function of intercepting a lightning stroke and shunting it to earth before it can affect and/or damage the protected object. NFPA 780-1992 covers shielding and stipulates the requirements for a lightning protection system.

Attention has to be given to the amount and nature of the contents of the building and the susceptibility of the contents to damage by induced lightning currents and fire. Power plant building design may be complex, with special interface requirements for electrical power, air handling equipment, fire alarm, security, and communication systems.

Copyright The Institute of Electrical and Electronics Engineers, Inc.
Provided by IHS under license with IEEE
No reproduction or networking permitted without license from IHS Not for Resale

6.3.5.6.2 Grounding

a) *Single-point guidelines for a multipoint grounding system.* To establish an interference-free ground reference system for a power plant, the cables or wires connected to computer equipment, communication systems, and control systems serviced within the power plant (i.e., twisted pair or coaxial) should be referenced or interconnected to the multipoint ground system in only one place. These guidelines are contained in [B6].

   For large facilities, the inductance of long conductors for the single-point ground connection to the multipoint ground may become impractical at high frequencies. Providing a low inductance signal reference ground mesh under interconnected sensitive equipment may mitigate possible interference.

b) *Communication lines.* Grounding connections for communication circuits should be physically brought together and connected to the same multipoint ground system as the lightning protection ground, the control system signal reference ground, and the safety and power ground.

7. Remote ancillary facilities

7.1 Scope

Ancillary facilities include structures that are outside of the power plant and switchyard but part of the power plant premises, such as fuel and ash handling facilities, weather stations, water intake and outflow, cooling towers, precipitator, and remote site populace warning systems.

7.2 Indoor equipment

Surge protection for indoor ancillary facilities should be provided in accordance with the previous clauses of this guide.

7.3 Outdoor equipment

Some electrical equipment, such as transformers, switchgear, motor control centers, and motors, is located outdoors. This equipment is often shielded from direct lightning strokes by nearby structures, transmission line shield wires, etc. (see NFPA 780-1992). It has been found adequate to ground the electrical equipment enclosure to the ground grid.

Equipment that is not shielded from direct strokes by nearby structures may require a lightning protection system. In all cases, the equipment enclosure has to be grounded to the ground grid (see NFPA 780-1992).

Motors connected to the plant electrical power system through long underground cables (even when shielded) can be subjected to damaging surges from lightning. Two failure mechanisms are possible:

a) Surges are induced on the underground cable and are conducted to the motor through the power cables
b) Lightning strikes in the vicinity of the motors elevate the ground potential, and therefore the frame of the motor, to such an extent that motors may fail

In these locations, surge protection should be considered.

--`,,`-`-`,,`,,`,`,,`---

Copyright The Institute of Electrical and Electronics Engineers, Inc.
Provided by IHS under license with IEEE
No reproduction or networking permitted without license from IHS Not for Resale

Annex A
Soil resistivity

(informative)

Table A1—Soil resistivity

Conditions		Ohm-meters (Ω·m)
Seawater		0.01–1.0
Swamps		10–100
Average soil		100
Dry soil		1000
Slate		10^7
Sandstone		10^8
Concrete	Moist	30
	Dry	90
	Average	60

Copyright The Institute of Electrical and Electronics Engineers, Inc.
Provided by IHS under license with IEEE
No reproduction or networking permitted without license from IHS
Not for Resale

Annex B
Bibliography

(informative)

[B1] AIEE Committee Report, "A Method of Estimating Lightning Performance of Transmission Lines," *AIEE Transactions*, vol. 69, pp. 1187–1196, 1950.

[B2] AIEE Committee Report, "Switching Surges—Part I—Phase to Ground Voltages," *AIEE Transactions*, vol. 80, pp. 240–261, 1961.

[B3] AIEE General Systems Subcommittee, "Power System Overvoltages Produced by Faults and Switching Operations," *AIEE Transactions*, vol. PAS-67, pp. 912–922, 1948.

[B4] EEI Publication No. 68-900, *EHV Transmission Line Reference Book*. Washington, DC: Edison Electric Institute.

[B5] EPRI EL-2982, Project 1359-2, "Measurement and Characterization of Substation Electromagnetic Transients," March 1983.

[B6] FIPS Publication 94, "Guideline on Electrical Power for ADP Installations," National Institute of Standards and Technology, Sept. 1983.

[B7] IEEE P998/D5, Draft Guide For Direct Lightning Stroke Shielding of Substations.

[B8] IEEE Committee Report No. 77-8L0100-8-PWR, "Bibliography on Insulator Contamination."

[B9] IEEE Committee Report (IEEE Power Systems Communication Committee), "A Guide for the Protection of Wire Line Communications Facilities Serving Electric Power Stations," *IEEE Transactions on Power Apparatus and Systems*, vol. PAS-85, no. 10, pp. 1065–1083, Oct. 1966.

[B10] IEEE Committee Report, "A Simplified Method for Estimating Lightning Performance of Transmission Lines," *IEEE Transactions on Power Apparatus and Systems*, vol. PAS-104, no. 4, pp. 919–932, Apr. 1985.

[B11] IEEE Committee Report, "Switching Surges—Part II—Selection of Typical Waves for Insulation Coordination," *IEEE Transactions on Power Apparatus and Systems*, vol. PAS-85, no. 10, pp. 1091–1097, Oct. 1966.

[B12] IEEE Committee Report, "Switching Surges—Part III—Field and Analyzer Results for Transmission Lines; Past, Present and Future Trends," *IEEE Transactions on Power Apparatus and Systems*, vol. PAS-89, no. 2, pp. 173–189, Feb. 1970.

[B13] IEEE Interim Report (IEEE Power Systems Communication Committee), "The Isolation Concept for the Protection of Wire Line Facilities Entering Electric Power Stations," *IEEE Transactions on Power Apparatus and Systems*, vol. PAS-95, no. 4, pp. 1216–1233, July/Aug. 1976.

[B14] IEEE Interim Report (IEEE Power Systems Communication Committee), "The Neutralizing Transformer Concept for Protection of Wire Line Facilities Entering Electric Power Stations," *IEEE Transactions on Power Apparatus and Systems*, vol. PAS-96, no. 4, pp. 1256–1279, July/Aug. 1977.

Copyright The Institute of Electrical and Electronics Engineers, Inc.
Provided by IHS under license with IEEE
No reproduction or networking permitted without license from IHS
Not for Resale

[B15] IEEE Power System Relaying Committee, "Summary of the Guide for the Grounding of Instrument Transformer Secondary Circuits and Cases," *IEEE Transactions on Power Delivery*, vol. PWRD-1, no. 4, pp. 1459–1465, Oct. 1988.

[B16] IEEE Power System Relaying Committee, "Voltage Surges in Relay Control Circuits, Interim Report," IEEE Conference Paper 31, presented at the IEEE Summer Power Conference, New Orleans, LA, July 1966.

[B17] IEEE Surge-Protective Devices Committee, "Bibliography on Power Generating Plants Surge Protection," *IEEE Transactions on Power Delivery*, vol. 6, no. 2, pp. 754–793, Apr. 1991.

[B18] IEEE Task Force Report, "Investigations and Evaluation of Lightning Protective Methods for Distribution Circuits, Part I: Mode Study and Analysis," *IEEE Transactions on Power Apparatus and Systems*, vol. PAS-88, no. 8, pp. 1234–1238, Aug. 1969.

[B19] IEEE Task Force Report, "Investigations and Evaluation of Lightning Protective Methods for Distribution Circuits, Part II: Application and Evaluation," *IEEE Transactions on Power Apparatus and Systems*, vol. PAS-88, no. 8, pp. 1239–1247, Aug. 1969.

[B20] IEEE Tutorial Course 79 EH0144-6 PWR, "Surge Protection in Power Systems," Chapter 5, pp. 61–75.

[B21] NUREG/CR-2252, *National Thunderstorm Frequencies for the Contiguous United States*. Asheville, NC: National Climactic Center.

[B22] Allen, J. E. and Waldorf, S. K., "Arcing Ground Test on a Normally Ungrounded 13-kV 3-Phase Bus," *AIEE Transactions*, vol. PAS-65, pp. 298–306, and "Discussions," p. 498, 1946.

[B23] Amchin, H. K. and Curto, R. T., "Switching Surge Voltages Due to the Interruption of Transformer Magnetizing Current," *AIEE Transactions*, pp. 1443–1449, Dec. 1959.

[B24] Anderson, J. G., Johnson, I. B., Price, W. S., and Schlomann, R. H., "1956 Lightning Field Investigation on the OVEC 345 kV System," *AIEE Transactions*, vol. 34, pp. 1447–1459, Feb. 1958.

[B25] Armstrong, H. R., DeVerka, E. F., and Stoelding H. O., "Impulse Studies on Distribution Line Construction," *IEEE Transactions on Power Apparatus and Systems*, vol. PAS-86, no. 2, pp. 206–214, Feb. 1967.

[B26] Armstrong, H. R. and Whitehead, E. R., "Field and Analytical Studies of Transmission Line Shielding," *IEEE Transactions on Power Apparatus and Systems*, vol. PAS-87, no. 1, pp. 270–281, Jan. 1968.

[B27] Armstrong, H. R. and Whitehead, E. R., "A Lightning Stroke Pathfinder," *IEEE Transactions on Power Apparatus and Systems*, vol. PAS-83, pp. 1223–1227, 1964.

[B28] Azuma, H. and Kawai, M., "Design and Performance of Unbalanced Insulation in Double Circuit Transmission Lines," *IEEE Transactions on Power Apparatus and Systems*, vol. PAS-84, no. 9, pp. 839–846, Sept. 1965.

[B29] Bankoske, J. W. and Wagner, C. L., "Evaluation of Surge Suppression Resistors in High Voltage Circuit Breakers," *IEEE Transactions on Power Apparatus and Systems*, vol. PAS-86, no. 6, pp. 698–707, June 1967.

[B30] Bewley, L. V., *Traveling Waves on Transmission Systems*, 2nd ed., Chapter 10. New York: John Wiley and Sons.

Copyright The Institute of Electrical and Electronics Engineers, Inc.
Provided by IHS under license with IEEE
No reproduction or networking permitted without license from IHS Not for Resale

[B31] Block, R. *The Grounds for Lightning and EMP Protection*. Polyphaser Corporation, Oct. 1987.

[B32] Boehne, E. W., Gaibrois, G. L., Koch, R. E., and Mikulecky, H. W., "Coordination of Lightning Arresters and Current-Limiting Fuses," *IEEE Transactions on Power Apparatus and Systems*, vol. PAS-91, pp. 1075–1078, May 1972.

[B33] Boijaud, A., Jecko, B., and Reixex, A., "Electromagnetic Pulse Penetration into Reinforced-Concrete Buildings," *IEEE Transactions on Electromagnetic Compatibility*, vol. EMC-29, no. 1, pp. 72–76, Feb. 1987.

[B34] Booth, W. H., Niebuhr, W. D., Rocamora, R. G., and Wasilowski, R. B., "The Analysis And Prediction of Harmonic Resonant Overvoltages Resulting From Line Dropping And Fault Clearing Transformer-Terminated EHV Lines," *IEEE Transactions on Power Apparatus and Systems*, vol. PAS-100, no. 2, pp. 729–736, Feb. 1981.

[B35] Borgvall, T., et al., "Voltages in Substation Control Cables during Switching Operations," *CIGRE* 36-05, 1970.

[B36] Brown, G. W. and Thunander, S., "Frequency of Distribution Arrester Discharge Currents Due to Direct Strokes," *IEEE Transactions on Power Apparatus and Systems*, vol. PAS-95, no. 5, pp. 1571–1578, Sept./Oct. 1976.

[B37] Buschart, R. J., "Computer Grounding and the National Electrical Code," *IEEE Transactions on Industrial Applications*, vol. IAS-23, no. 3, pp. 404–407, May/June 1987.

[B38] Caldecott, R., et al., "HVDC Converter Station Tests in the 0.1 to 5 MHz Frequency Range," *IEEE Transactions on Power Apparatus and Systems*, vol. PAS-3, no. 3, pp. 971–977, July 1988.

[B39] Caswell, R. W., Griscom, S. B., et al., "Five Year Field Investigation of Lightning Effects on Transmission Lines—Parts I, II, III," *IEEE Transactions on Power Apparatus and Systems*, vol. PAS-84, no. 4, pp. 257–280, Apr. 1965, and Discussion, *IEEE Transactions on Power Apparatus and Systems*, vol. PAS-84, no. 6, pp. 504–508, June 1965.

[B40] Caswell, R. W., Johnson, I. B., et al., "Lightning Performance of 138 kV Twin Circuit Transmission Lines of Commonwealth Edison Company—Operating Experience and Field Studies," *AIEE Transactions*, vol. 34, pp. 1480–1491, Feb. 1958.

[B41] Chadwick, J. W., "Proposed IEEE Surge Withstand Capability Test for Solid-State Relays," in *American Power Conference*, vol. PAS-32, pp. 1070–1075, 1970.

[B42] Champiot, G. G., "Disturbances Produced by Transceivers and Walkie-Talkies," *Electra*, no. 83, pp. 103–110, July 1982.

[B43] Champiot, G. G. and Agostini, J. C., "Electromagnetic Environment in a PWR Power Plant," in *1982 EMC Conference*, pp. 377–387.

[B44] Chesworth, E. T., "Electromagnetic Interference Control in Structures and Buildings," *EMC Technology*, pp. 39–49, Jan./Feb. 1986.

[B45] Chung, H-Y. and Moore, L.E., "Field Measurements of Transient Voltages on the Control Circuits for EHV Lines," IEEE Conference Paper 70-CP 581-PWR, presented at the IEEE Summer Power Meeting and EHV Conference, July 12–17, 1970, Los Angeles, CA.

[B46] Clayton, J. M. and Hileman, A. R., "A Method of Estimating Lightning Performance of Distribution Lines," *AIEE Transactions*, vol. 73, pp. 933–945, Aug. 1954.

Copyright The Institute of Electrical and Electronics Engineers, Inc.
Provided by IHS under license with IEEE
No reproduction or networking permitted without license from IHS Not for Resale

[B47] Clayton, J. M. and Young, F. S., "Estimating Lightning Performance of Transmission Lines," *IEEE Transactions on Power Apparatus and Systems*, vol. PAS-83, no. 11, pp. 1102–1110, Nov. 1964.

[B48] Clerici, A., Ruckstuhl, G., and Vian, A., "Influence of Shunt Reactors on Switching Surges," *IEEE Transactions on Power Apparatus and Systems*, vol. PAS-89, no. 8, pp. 1727–1736, Nov./Dec. 1970.

[B49] Darveniza, M., Hurley, J. J., and Limbourn, G. S., "Design of Overhead Transmission Lines for Better Lightning Performance," *CIGRE* 33-04, 1968.

[B50] Darveniza, M., Limbourn, G. J., and Prentice, S. A., "Line Design and Electrical Properties of Wood," *IEEE Transactions on Power Apparatus and Systems*, vol. PAS-86, no. 11, pp. 1344–1356, Nov. 1967.

[B51] Darveniza, M. and Sargent, M. A., "The Calculation of Double Circuit Outage Rate of Transmission Lines," *IEEE Transactions on Power Apparatus and Systems*, vol. PA-85, no. 6, pp. 665–678, June 1967.

[B52] Darveniza, M. and Sargent, M. A., "Lightning Performance of Double Circuit Transmission Lines," *IEEE Transactions on Power Apparatus and Systems*, vol. PAS-89, no. 5, pp. 913–925, May/June 1970.

[B53] Dick, E. P., et al., "Practical Calculation of Switching Surges at Motor Terminals," *IEEE Transactions on Energy Conversion*, vol. 3, no. 4, pp. 864–872, Dec. 1988.

[B54] Dick, E. P., et al., "Prestriking Voltages Associated With Motor Breaker Closing," *IEEE Transactions on Energy Conversion*, vol. 3, no. 4, pp. 855–863, Dec. 1988.

[B55] Durham, M. and Lockerd, C., "NEC Article 725-Cost Effective Control Wiring," *IEEE Transactions on Industry Applications*, vol. IAS-25, no. 5, pp. 901–905, Sept./Oct. 1989.

[B56] *Electrical Transmission and Distribution Reference Book*, Chapter 17. Pittsburgh, PA: Westinghouse Electric Corporation, 1950.

[B57] Endrenyi, J., "Analysis of Transmission Tower Potential During Ground Faults," *IEEE Transactions on Power Apparatus and Systems*, vol. PAS-86, no. 10, pp. 1274–1283, Oct. 1967.

[B58] Erickson, A. J., Meal, D. V., and Stringfellow, M. F., "Lightning Induced Overvoltages on Overhead Distribution Lines," *IEEE Transactions on Power Apparatus and Systems*, vol. PAS-101, no. 4, pp. 960–968, Apr. 1982.

[B59] Gaibrois, G. L., "Lightning Current Magnitude Through Distribution Arresters," *IEEE Transactions on Power Apparatus and Systems*, vol. PAS-100, no. 3, pp. 964–970, Mar. 1981.

[B60] Garton, H. L. and Stolt, H. K., "Field Tests and Corrective Measures for Suppression of Transients on Solid-State Devices in EHV Stations," in *American Power Conference*, vol. 31, pp. 1029–1038, 1969.

[B61] Garton, H. L. and Stolt, H. K., "Protection of Solid-State Devices from Transients," *Transmission and Distribution Magazine*, pp. 52–57, June 1970.

[B62] Gilman, D. W. and Whitehead, E. R., "The Mechanism of Lightning Flashover on High Voltage and Extra High Voltage Transmission Lines," *Electra*, no. 27, pp. 65–96, Mar. 1973.

[B63] Gooding, F. H. and Slade, H. B., "Shielding of Communication Cables—Part I on Communications and Electronics," *AIEE Transactions*, vol. 74, pp. 378–387, July 1955.

Copyright The Institute of Electrical and Electronics Engineers, Inc.
Provided by IHS under license with IEEE
No reproduction or networking permitted without license from IHS Not for Resale

[B64] Gupta, B. K., Lloyd, B. A., Stone, G. C., and Nilsson, N. E., "Turn Insulation Capability of Large AC Motors, Part 3—Insulation Coordination," *IEEE Transactions on Energy Conversion*, vol. EC-2, no. 4, pp. 674–679, Dec. 1987.

[B65] Gupta, B. K., Nilsson, N. E., and Sharma, D. K., "Protection of Motors Against High Voltage Switching Surges," *IEEE Transactions on Energy Conversion*, 90 IC 558-7, T-EC, Mar. 1992.

[B66] Harvey, S. M. and Ponke, W. J., "Electromagnetic Shielding of a System Computer in a 230-kV Substation," *IEEE Transactions on Power Apparatus and Systems*, vol. PAS-95, no. 1, pp. 187–196, Jan./Feb. 1976.

[B67] Harvey, S. M. and Vlah, Z. J., "Multi-Frequency Surge Withstand Capability Tests for Protective Relays," *IEEE Transactions on Power Apparatus and Systems*, vol. PAS-100, no. 3, pp. 1065–1069, Mar. 1981.

[B68] Hicks, R. L. and Jones, D. E., "Transient Voltages on Power Station Wiring," *IEEE Transactions on Power Apparatus and Systems*, vol. PAS-90, no. 1, pp. 261–269, Jan./Feb. 1971.

[B69] Hopkinson, R. H., "Ferroresonant Overvoltages Due to Open Conductors," *G. E. Distribution Magazine*, Fourth Quarter, 1967.

[B70] Jackson, D. W., "Surge Protection of Rotating Machines," in IEEE Tutorial Course, Surge Protection in Power Systems, Course Text 79 EH0144-6-PWR.

[B71] Johnson, I. B., Schultz, A. J., Schultz, N. R., and Shores, R. B., "Some Fundamentals on Capacitance Switching," *AIEE Transactions*, vol. PAS-74, no. 19, pp. 727–736, Aug. 1955.

[B72] Kotheimer, W. C., "The Influence of Station Design on Control Circuit Transients," in *American Power Conference*, vol. 31, pp. 1021–1028, 1969.

[B73] Kotheimer, W. C. and Mankoff, L. L., "Electromagnetic Interference and Solid-State Protective Relays," *IEEE Transactions on Power Apparatus and Systems*, vol. PAS-96, no. 4, pp. 1311–1317, July/Aug. 1977.

[B74] Lear, C. M., McCann, G. D., and Wagner, C. F., "Shielding of Substations," *AIEE Transactions*, vol. 61, pp. 96–100, Feb. 1942.

[B75] Lee, R. H., "Grounding of Computers and Other Similar Sensitive Equipment," *IEEE Transactions on Industrial Applications*, vol. IAS-23, no. 3, pp. 408–411, May/June 1987.

[B76] Lee, R. H., "Lightning Protection of Buildings," *IEEE Transactions*, vol. IAS-15, no. 3, pp. 236–240, May/June 1979.

[B77] Lee, R. H., "Protection Zone for Buildings Against Lightning Strokes Using Transmission Line Protection Practice," *IEEE Transactions*, vol. IAS-14, no. 6, pp. 465–470, Nov./Dec. 1978.

[B78] Lenk, D. W., Koepfinger, J. L., and Sakich, J. D., "Utilization of Polymer Enclosed Intermediate Class Arresters to Improve the Performance of Modern Power Systems," *IEEE Transactions on Power Delivery*, vol. 78, no. 3, pp. 1542–1551, July 1992.

[B79] Lewis, W. H., "Recommended Power and Signal Grounding for Control and Computer Rooms," *IEEE Transactions on Industry Applications*, vol. IAS-21, no. 61, pp. 1503–1516, Nov./Dec. 1985.

--`,,`-`-`,,`,,`,`,,`---
Copyright The Institute of Electrical and Electronics Engineers, Inc.
Provided by IHS under license with IEEE
No reproduction or networking permitted without license from IHS Not for Resale

[B80] Lewis, W. H., "The Use and Abuse of Insulated/Isolated Grounding," *IEEE Transactions on Industrial Applications*, vol. IAS-25, no. 6, pp. 1093–1101, Nov./Dec. 1989.

[B81] Link, H., "Shielding of Modern Substations Against Direct Lightning Strokes," *IEEE Transactions on Power Apparatus and Systems*, vol. PAS-94, no. 5, pp. 1674–1679, Sept./Oct. 1975.

[B82] Lishchyna, L., "Discussion of Field and Analytical Studies of Transmission Line Shielding—Part II by Brown, G. W. and Whitehead, E. R.," *IEEE Transactions on Power Apparatus and Systems*, vol. PAS-88, no. 5, pp. 624–625, May 1969.

[B83] McCann, G. D., "The Effect of Corona on Coupling Factors Between Ground Wires and Phase Conductors," *AIEE Transactions*, vol. 62, pp. 818–826, 1943.

[B84] Maggioli, V. J., "Grounding and Computer Technology," *IEEE Transactions on Industry Applications*, vol. IAS-23, no. 3, pp. 412–416, May/June 1987.

[B85] Marieni, G. J. and Sonneman, W. K., "A Review of Transient Voltages in Control Circuits," *Westinghouse Silent Sentinels*, RPL-67-3, April 1967. Paper presented at the Relay Committee Meeting, Philadelphia, PA, Feb. 24, 1967.

[B86] Masamitsu, H., "A New Threat—EMI Effect by Indirect ESD on Electronic Equipment," *IEEE Transactions on Industry Applications*, vol. IAS-25, no. 5, pp. 939–944, Sept./Oct. 1989.

[B87] Miakopar, A. S., *Elektrichesvo*, no. 1, pp. 208–235, 1964.

[B88] Mitani, H., "Magnitude and Frequency of Transient Induced Voltage in Low Voltage Control Circuits of Power Stations and Substations," *IEEE Transactions on Power Apparatus and Systems*, vol. PAS-99, no. 5, pp. 1871–1878, Sept./Oct. 1980.

[B89] Mousa, A. M., "A Computer Program For Designing the Lightning Shielding Systems of Substations," *IEEE Transactions on Power Delivery*, vol. 6, no. 1, pp. 143–152, Jan. 1991.

[B90] Mousa, A. M., "Shielding of High Voltage and Extra High Voltage Substations," *IEEE Transactions on Power Apparatus and Systems*, vol. PAS-95, no. 4, pp. 1303–1310, July/Aug. 1976.

[B91] Mousa, A. M. and Srivasla, K. D., "The Implications of the Electrogeometric Model Regarding the Effect of Height of Structure on the Median Amplitude of Collected Lightning Strokes," *IEEE Transactions on Power Delivery*, vol. 4, no. 2, pp. 1450–1460, Apr. 1989.

[B92] O'Neil, J. and Richmond, R., "Magnetic Field Penetration through Protective Metal Shields," in *1987 International Symposium on Electromagnetic Compatibility*, pp. 7–11.

[B93] Osburn, J. D. M. and White, D. R. J., "Grounding—A Recommendation for the Future," in *1987 International Symposium on Electromagnetic Compatibility*, pp. 155–160, Aug. 25–27, 1987.

[B94] Patterson, Neal A., "Carrier Frequency Interference from HVDC Systems," *IEEE Transactions on Power Apparatus and Systems*, vol. PAS-104, no. 11, pp. 3255–3261, Nov. 1985.

[B95] Rocamora, R. G., et al., "Fault Clearing Overvoltages on Long Transformer Terminated Lines," *IEEE Transactions on Power Apparatus and Systems*, vol. PAS-98, no. 2, pp. 667–678, Mar./Apr. 1979.

[B96] Sargent, M. A., "Monte Carlo Simulation of the Lightning Performance of Overhead Shielding Networks of High-Voltage Stations," *IEEE Transactions on Power Apparatus and Systems*, vol. PAS-91, no. 4, pp. 1651–1656, July/Aug. 1972.

Copyright The Institute of Electrical and Electronics Engineers, Inc.
Provided by IHS under license with IEEE
No reproduction or networking permitted without license from IHS
Not for Resale

[B97] Smith, K. and Voorhees, A., “Earth Shielding EMI-Shielded Facilities,” *EMC Technology,* Mar./Apr. 1987.

[B98] Smith, L. E., “Voltages Induced in Control Cables from Arcing 500-kV Switches,” IEEE Conference Paper 31, presented at the IEEE Summer Power Conference, New Orleans, LA, July 1966.

[B99] Stump, K. B., Teleander, S. H., and Wilhelm, M. R., “Surge Limiters for Vacuum Circuit Breaker Switchgear,” *IEEE Transactions on Power Delivery,* vol. PWRD-2, no. 1, pp. 107–116, Jan. 1987.

[B100] Sunde, E. O., *Earth Conductor Effects in Transmission Systems*. New York: Van Nostrand, 1949.

[B101] Sutton, H. J., “Transient Pickup in 500 kV Control Circuits,” in *American Power Conference*, vol. 32, 1970.

[B102] Tepper, E. P., “Shielding to Control the Electronic Environment,” *Electrical Systems Design*, pp. 19–21, Nov./Dec. 1987.

[B103] *Transmission Line Reference Book—345 kV and Above*, Chapters 2, 9, 11, and 12. Palo Alto, CA: Electric Power Research Institute, 1975.

[B104] Tseng, F. K., et al., “Instrumentation and Control in EHV Substations,” *IEEE Transactions on Power Apparatus and Systems*, vol. PAS-94, no. 2, pp. 632–641, Mar./Apr. 1975.

[B105] Wagner, C. F., *Electrical Transmission and Distribution Reference Book*, 4th ed., Pittsburgh, PA: Westinghouse Electric Corporation, 1964.

[B106] Westinghouse Electric Corporation Relay Engineers, “Protection Against Transients and Surges” in *Applied Protective Relaying*. Pittsburgh, PA: Westinghouse Electric Corporation, 1976.

[B107] *Westinghouse Transmission and Distribution Handbook*, Chapter 14, Section 10, p. 519, Analog Computer Studies. Pittsburgh, PA: Westinghouse Electric Corporation, 1964.

[B108] Whitehead, E. R., “Mechanism of Lightning Flashover,” EEI RP 50, Pub. 72-900, Feb. 1971.

[B109] Zinder, David A., “Frequency Variable Parameters of EMI Protective Devices,” *EMC Technology,* pp. 51–52, July/Aug. 1988.

[B110] Zipse, D. W., “Grounding for Process Control Computers and Distributed Control Systems: The National Electrical Code and Present Grounding Practices,” *IEEE Transactions on Industry Applications*, vol. IAS-23, no. 3, pp. 417–421, May/June 1987.

Copyright The Institute of Electrical and Electronics Engineers, Inc.
Provided by IHS under license with IEEE
No reproduction or networking permitted without license from IHS Not for Resale