*Recognized as an*
American National Standard

**IEEE Std 1299/C62.22.1-1996(R2003)**

# IEEE Guide for the Connection of Surge Arresters to Protect Insulated, Shielded Electric Power Cable Systems

Sponsor

**Insulated Conductors Committee**
**and the**
**Surge Protective Devices Committee**
**of the**
**IEEE Power Engineering Society**

Reaffirmed 11 September 2003
Approved 10 December 1996

**IEEE Standards Board**

Approved 15 May 1997

**American National Standards Institute**

**Abstract:** This guide suggests surge arrester installation methods at distribution cable terminal poles in order to minimize the total impressed transient voltage on medium-voltage distribution cables. Grounding electrode techniques, pole ground values, and system ground grid values are not addressed or considered in this document.

**Keywords:** cable, lead length, margin of protection, surge arresters

---

The Institute of Electrical and Electronics Engineers, Inc.
345 East 47th Street, New York, NY 10017-2394, USA

Copyright © 1997 by the Institute of Electrical and Electronics Engineers, Inc.
All rights reserved. Published 1997. Printed in the United States of America.

ISBN 1-55937-868-9

*No part of this publication may be reproduced in any form, in an electronic retrieval system or otherwise, without the prior written permission of the publisher.*

Copyright The Institute of Electrical and Electronics Engineers, Inc.
Provided by IHS under license with IEEE
No reproduction or networking permitted without license from IHS

Not for Resale

**IEEE Standards** documents are developed within the Technical Committees of the IEEE Societies and the Standards Coordinating Committees of the IEEE Standards Board. Members of the committees serve voluntarily and without compensation. They are not necessarily members of the Institute. The standards developed within IEEE represent a consensus of the broad expertise on the subject within the Institute as well as those activities outside of IEEE that have expressed an interest in participating in the development of the standard.

Use of an IEEE Standard is wholly voluntary. The existence of an IEEE Standard does not imply that there are no other ways to produce, test, measure, purchase, market, or provide other goods and services related to the scope of the IEEE Standard. Furthermore, the viewpoint expressed at the time a standard is approved and issued is subject to change brought about through developments in the state of the art and comments received from users of the standard. Every IEEE Standard is subjected to review at least every five years for revision or reaffirmation. When a document is more than five years old and has not been reaffirmed, it is reasonable to conclude that its contents, although still of some value, do not wholly reflect the present state of the art. Users are cautioned to check to determine that they have the latest edition of any IEEE Standard.

Comments for revision of IEEE Standards are welcome from any interested party, regardless of membership affiliation with IEEE. Suggestions for changes in documents should be in the form of a proposed change of text, together with appropriate supporting comments.

Interpretations: Occasionally questions may arise regarding the meaning of portions of standards as they relate to specific applications. When the need for interpretations is brought to the attention of IEEE, the Institute will initiate action to prepare appropriate responses. Since IEEE Standards represent a consensus of all concerned interests, it is important to ensure that any interpretation has also received the concurrence of a balance of interests. For this reason IEEE and the members of its technical committees are not able to provide an instant response to interpretation requests except in those cases where the matter has previously received formal consideration.

Comments on standards and requests for interpretations should be addressed to:

Secretary, IEEE Standards Board
445 Hoes Lane
P.O. Box 1331
Piscataway, NJ 08855-1331
USA

Note: Attention is called to the possibility that implementation of this standard may require use of subject matter covered by patent rights. By publication of this standard, no position is taken with respect to the existence or validity of any patent rights in connection therewith. The IEEE shall not be responsible for identifying all patents for which a license may be required by an IEEE standard or for conducting inquiries into the legal validity or scope of those patents that are brought to its attention.

Authorization to photocopy portions of any individual standard for internal or personal use is granted by the Institute of Electrical and Electronics Engineers, Inc., provided that the appropriate fee is paid to Copyright Clearance Center. To arrange for payment of licensing fee, please contact Copyright Clearance Center, Customer Service, 222 Rosewood Drive, Danvers, MA 01923 USA; (508) 750-8400. Permission to photocopy portions of any individual standard for educational classroom use can also be obtained through the Copyright Clearance Center.

--`,``,,-`-`,,`,,`,`,,`---

Copyright The Institute of Electrical and Electronics Engineers, Inc.
Provided by IHS under license with IEEE
No reproduction or networking permitted without license from IHS
Not for Resale

# Introduction

(This introduction is not a part of IEEE Std 1299/C62.22.1-1996, IEEE Guide for the Connection of Surge Arresters to Protect Insulated, Shielded Electric Power Cable Systems.)

This guide concentrates on the connection of surge arresters for distribution system terminal pole applications in order to minimize the total impressed transient voltage that the cable system can experience during surge current discharge. It is not the intent of this guide to recommend the use of surge arresters, as that is addressed in IEEE Std C62.22-1991, IEEE Guide for the Application of Metal-Oxide Surge Arresters for Alternating-Current Systems. Pole or system grounding values and techniques are not addressed. Practical, simple examples are provided in an informative annex to estimate margins of protection depending upon the arrester installation technique used.

The Accredited Standards Committee on Surge Arresters, C62, that reviewed and approved this document, had the following members at the time of approval:

**Joseph L. Koepfinger,** *Chair* **John A. Gauthier,** *Secretary*

**Rosemary Tennis,** *IEEE Staff Liaison*

| *Organization Represented* | *Name of Representative* |
|---|---|
| Association of American Railroads | Wayne Etter |
| Canadian Standards Association | D. M. Smith |
| Bonneville Power Administration | G. E. Lee |
| Electric Light and Power | J. W. Wilson<br>W. A. Maguire<br>G. N. Miller *(Alt.)*<br>R. A. Jones<br>T. A. Wolfe |
| Institute of Electrical and Electronics Engineers | J. L. Koepfinger<br>J. J. Burke<br>G. L. Gaibrois<br>W. H. Kapp<br>Richard Odenberg<br>Keith Stump<br>Edgar Taylor *(Alt.)* |
| National Electrical Manufacturers Association | Dennis W. Lenk<br>Larry Bock *(Alt.)*<br>Andi Haa<br>Paul Jeffries<br>Hans Steinhoff<br>Jonathan J. Woodworth |
| Members-at-Large | J. Osterhout<br>B. Pensar<br>Steven G. Whisenant |
| Rural Electrification Administration | (vacant) |
| Underwriters Laboratories | George Mauro |



Copyright The Institute of Electrical and Electronics Engineers, Inc.
Provided by IHS under license with IEEE
No reproduction or networking permitted without license from IHS
Not for Resale

At the time this guide was completed, Working Group 10-53 had the following membership:

**Jeffry Mackevich,** *Chair*

Steven Au
Paul Bloyed
Harvey Bowles
James Carey
Thomas Champion
Philip Cox
Russ Dantzler
John DuPont
William Hansen
Paul Just
Gael Kennedy
Carl Landinger
Glenn Luzzi
Greg Mastoras
John Pegram
Greg Rampley
Robert Resuali
Bruce Shattuck
Frank Stepniak
Jim Tarpey
Keith Warden
Clarence Wooddell
Harry Yaworski

The following persons were on the balloting committee:

R. W. Allen
Theodore A. Balaska
Earle C. Bascom, III
Michael Bayer
Bruce L. Bennett
M. Thomas Black
David T. Bogden
Vincent J. Boliver
Ken E. Bow
Harvey L. Bowles
John E. Bramfitt
Thomas C. Champion
Paul L. Cinquemani
Mike G. Comber
Thomas M. Compton
Russ C. Dantzler
Michele de Nigris
James Detwiler
C. Doench
John P. Dupont
Cliff C. Erven
Robert E. Fleming
S. Michael Foty
Ronald F. Frank
R.D. Fulcomer
Gilbert L. Gaibrois
John B. Gardner
Robert B. Gear
Kenneth Hancock
Richard L. Harp
Richard A. Hartlein
Wolfgang B. Haverkamp
Stanley V. Heyer
Lauri J. Hiivala
Andrew Robert Hileman
David W. Jackson
Darrel R. Jeter
Fred Kimsey
Joseph L. Koepfinger
F.E. LaGase
Carl Landinger
Gerald E. Lee
Dennis W. Lenk
Gabor Ludasi
Jeffry Mackevich
William A. Maguire
Spiro G. Mastoras
Andreas Meier
John E. Merando, Jr.
James A. Moran
Yasin I. Musa
Shantanu Nandi
Dan J. Nichols
Joseph C. Osterhout
James J. Pachot
Cutter D. Palmer
Keith A. Petty
Gary Polhill
John B. Posey
Greg P. Rampley
Robert A. Resuali
Gilbert L. Smith
Nagu N. Srinivas
Thomas F. Stabosz
Hans Steinhoff
Frank Stepniak
Keith B. Stump
Orloff W. Styve
L. Douglas Sweeney
Eva J. Tarasiewicz
Edgar R. Taylor, Jr.
Rao Thallam
Austin C. Tingley
Duc B. Trinh
Richard S. Vencus
Michael L. Walker
Reigh Walling
Daniel J. Ward
Roland H. W. Watkins
Arthur C. Westrom
Steve G. Whisenant
John L. White
James W. Wilson, Jr.
Jonathan J. Woodworth
Donald M. Worden
Joseph T. Zimnoch

--`,,```,,-`-`,,`,,`,`,,`---



Copyright The Institute of Electrical and Electronics Engineers, Inc.
Provided by IHS under license with IEEE
No reproduction or networking permitted without license from IHS
Not for Resale

When the IEEE Standards Board approved this standard on 10 December 1996, it had the following membership:

**Donald C. Loughry,** Chair **Richard J. Holleman,** Vice Chair

**Andrew G. Salem,** Secretary

Gilles A. Baril
Clyde R. Camp
Joseph A. Cannatelli
Stephen L. Diamond
Harold E. Epstein
Donald C. Fleckenstein
Jay Forster*
Donald N. Heirman
Ben C. Johnson
E. G. "Al" Kiener
Joseph L. Koepfinger*
Stephen R. Lambert
Lawrence V. McCall
L. Bruce McClung
Marco W. Migliaro
Mary Lou Padgett
John W. Pope
Jose R. Ramos
Arthur K. Reilly
Ronald H. Reimer
Gary S. Robinson
Ingo Rüsch
John S. Ryan
Chee Kiow Tan
Leonard L. Tripp
Howard L. Wolfman

*Member Emeritus

Also included are the following nonvoting IEEE Standards Board liaisons:

Satish K. Aggarwal
Alan H. Cookson
Chester C. Taylor

Rochelle L. Stern
IEEE Standards Project Editor



Copyright The Institute of Electrical and Electronics Engineers, Inc.
Provided by IHS under license with IEEE
No reproduction or networking permitted without license from IHS
Not for Resale

# Contents

CLAUSE PAGE

1. Overview ..... 1

1.1 Scope ..... 1
1.2 Purpose ..... 1

2. Cable damage ..... 1

3. Lightning overvoltage and cable system effects ..... 2

3.1 Lightning surges on the overhead distribution system ..... 2

4. Surge arrester operation ..... 4

4.1 Surge arrester operation ..... 4
4.2 Lead length ..... 4

5. Cable system surge arrester protection schemes ..... 4

5.1 Terminal pole arrester scheme ..... 4
5.2 Terminal pole and open point arrester scheme ..... 5
5.3 Terminal pole, mid-point and open point arrester scheme ..... 5

6. Lightning data ..... 5

6.1 Multiple current impulses ..... 5
6.2 Surge current magnitude ..... 5
6.3 Rise time ..... 6
6.4 Bi-polar surges ..... 6

7. Total impressed transient voltage ..... 7

7.1 Total impressed transient voltage ..... 7
7.2 Arrester discharge voltage ..... 7
7.3 Connection lead length voltage drop ..... 7
7.4 Sum of impressed transient voltage components ..... 7
7.5 Lead inductance ..... 8
7.6 Lead voltage build drop ..... 8

8. Open-point protection ..... 8

8.1 No open-point arrester ..... 8
8.2 With open-point protection ..... 9



Copyright The Institute of Electrical and Electronics Engineers, Inc.
Provided by IHS under license with IEEE
No reproduction or networking permitted without license from IHS Not for Resale

CLAUSE PAGE

9. Margins of protection ..... 9

9.1 Arrester at terminal pole only ..... 9
9.2 Arresters at terminal pole and open point ..... 10
9.3 Arresters at terminal pole, mid-span and open point ..... 10
9.4 Historical minimum margin of protection ..... 11

10. Terminal pole installation techniques ..... 11

10.1 Unjacketed concentric neutral cable using neutral wires or cable with semi-conducting jacket as pole ground with tap connection off riser ..... 11
10.2 Jacketed cable with separate pole ground with tap connection off riser ..... 12
10.3 Equivalent electrical circuit for arrester installation. ..... 13
10.4 Jacketed cable with separate pole ground with riser run through arrester ..... 14
10.5 Reduced ground lead length ..... 14
10.6 Use of coiled line lead discouraged. ..... 15

11. Recommendations ..... 16

ANNEX

Annex A (informative) Margin of protection calculation examples ..... 18

Annex B (informative) Bibliography ..... 27



Copyright The Institute of Electrical and Electronics Engineers, Inc.
Provided by IHS under license with IEEE
No reproduction or networking permitted without license from IHS
Not for Resale

Copyright The Institute of Electrical and Electronics Engineers, Inc.
Provided by IHS under license with IEEE
No reproduction or networking permitted without license from IHS

Not for Resale

# IEEE Guide for the Connection of Surge Arresters to Protect Insulated, Shielded Electric Power Cable Systems

## 1. Overview

### 1.1 Scope

This guide suggests surge arrester installation methods at distribution cable terminal poles in order to minimize the total impressed transient voltage on medium-voltage distribution cables. Grounding electrode techniques, pole ground values, and system ground grid values are not addressed or considered in this document.

### 1.2 Purpose

Historical surge arrester installation techniques for cable system protection may not have provided required margins of protection. Variables include the terminal-pole arrester characteristics, connection lead length inductive voltage drop and cable system open and mid-point arrester utilization. Different protection schemes are presented to assist the user who is designing overvoltage protection for cable systems to estimate available margins of protection. Margin of protection calculation cases for simple cases, which do not consider multiple reflections or the effects or cable taps, are included as practical examples in Annex A.

## 2. Cable damage

Medium-voltage cables are connected to overhead distribution lines and subjected to surge conditions. Overvoltage may contribute to failure or reduction in cable life [B7], [B8]. It is apparent cable life may be extended with improved surge protection [B7], [B8], [B9]. Significant aspects of cable surge protection include

a) Appropriate arrester at the terminal pole,
b) Minimum connection lead length,
c) Determination of the system BIL, with possible derating for aged systems, and
d) Use of open point and midpoint arresters, as necessary, to maintain desired margins of protection.



Copyright The Institute of Electrical and Electronics Engineers, Inc.
Provided by IHS under license with IEEE
No reproduction or networking permitted without license from IHS
Not for Resale

# 3. Lightning overvoltage and cable system effects

## 3.1 Lightning surges on the overhead distribution system

Medium voltage cables can be subjected to severe transient overvoltages as a result of lightning striking on, or near the overhead distribution system to which the cable is connected. Lightning strokes terminating on the overhead distribution line are called direct strokes. Strokes to ground, or to other objects such as trees or structures, in the vicinity of the overhead line produce electromagnetic fields that can induce substantial overvoltages. These strokes, which do not strike the line but are sufficiently close to induce overvoltages, are called induced strokes.

### 3.1.1 Direct strokes

For a direct stroke, the voltage on the overhead line is the product of the line surge impedance and the stroke current magnitude. The surge impedance of a typical distribution line is approximately 400 Ω. Unless the stroke is to an open end of a line, the surge current can propagate in both directions away from the stroke location. Therefore, the stroke current is divided in two, and the line voltage is

$$e_f = \frac{I_{\text{stroke}} \cdot Z_{\text{line}}}{2} \quad (1)$$

where

$e_f$ is the voltage to ground of the struck overhead line conductor
$I_{\text{stroke}}$ is the lightning stroke current magnitude
$Z_{\text{line}}$ is the surge impedance of the overhead line

Because lightning stroke crest currents are on the order of tens of kiloamperes, crest line voltage for a direct stroke is on the order of megavolts. This voltage level greatly exceeds typical distribution line insulation levels, and line flashover usually results. An exception is when the line is protected by an arrester within a short distance from the stroke location.

Voltages developed on an unprotected line prior to flashover propagate along the line as traveling waves. At the surge impedance discontinuity of the overhead line to cable transition, part of the wave is reflected and not all of the surge propagates into the cable. The voltage, which propagates into a cable, from an overhead line terminated into the cable without a transition point arrester, can be calculated by

$$e_{\text{cable}} = \frac{2 \cdot Z_{\text{cable}}}{Z_{\text{line}} + Z_{\text{cable}}} \cdot e_f \quad (1A)$$

where

$Z_{\text{cable}}$ is the surge impedance of the cable

Assuming a typical cable surge impedance of 40 Ω, only about 18% of the incoming surge voltage would enter the cable because of the surge impedance discontinuity. However, because the voltage on the line prior to flashover could be 1000 kV or more, the voltage passing through to the cable can be excessive.

### 3.1.2 Voltages following overhead line flashovers from direct strokes

Flashover of the overhead line does not eliminate the source of overvoltage applied to the cable. At the stroke location, both the overhead phase and neutral conductors will be elevated to the same potential with



Copyright The Institute of Electrical and Electronics Engineers, Inc.
Provided by IHS under license with IEEE
No reproduction or networking permitted without license from IHS Not for Resale

respect to ground after flashover. Unless the neutral grounding impedance at the struck location is low, both conductors will have a large voltage with respect to remote earth. For example, a 50 kA stroke to a location where the neutral is grounded through 50 Ω will elevate the phase and neutral to 2500 kV.

Voltage waves propagate away from the struck location along both the phase and the neutral. At adjacent locations where the neutral is grounded, there will be a reduction in the neutral voltage. The voltage on the struck primary conductor is reduced through inter-phase coupling, but not to the same extent as the neutral-voltage reduction. As a result, the voltage difference between the primary and neutral increases. This phase-neutral voltage is impressed on the cable at the overhead line to cable transition, modified by the cable surge impedance discontinuity. The voltage magnitudes from this phenomenon alone can be excessive, even if the line were to flashover instantly at the stroke location.

This same phenomenon occurs when an overhead line flashover is averted by a surge arrester on the struck phase near the stroke location. The neutral is elevated to the same potential as the phase, minus the arrester discharge voltage. The voltage difference tends to increase at adjacent neutral ground locations. Arresters at locations other than the cable termination point do not protect the cable.

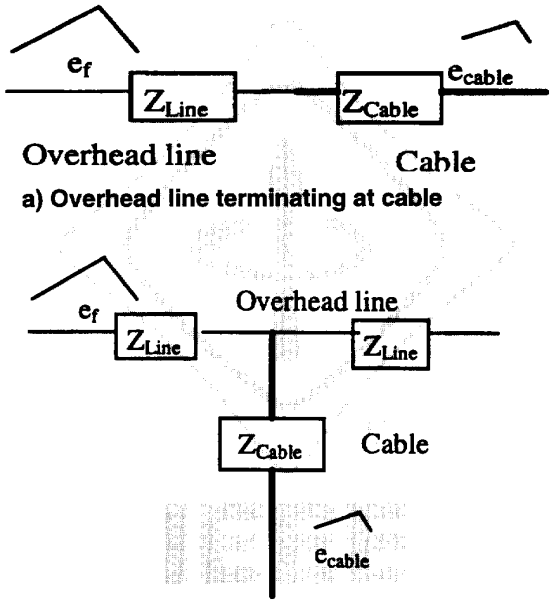


**Figure 1—Surge impedance discontinuity for overhead line terminating at cable and for cable tap off of an overhead line**

### 3.1.3 Induced lightning surges

The majority of lightning surges that occur on a distribution line are induced, particularly when the line is shielded by nearby trees and structures. Induced surge voltages on the overhead line are usually several hundred kilovolts, or less. At the cable transition, the impedance discontinuity allows only a portion of the induced surge voltage to propagate into the cable. Equation (1A) applies to the calculation of the cable voltage for the case where the overhead line terminates at the cable transition. For the common case of a cable tapped off of a continuing overhead line, the percentage of voltage refracting onto the cable is slightly less. Considering the magnitude of induced surges and the voltage reduction due to the surge impedance discontinuity



Copyright The Institute of Electrical and Electronics Engineers, Inc.
Provided by IHS under license with IEEE
No reproduction or networking permitted without license from IHS Not for Resale

between an overhead line and a cable, induced surges are not generally critical to medium voltage cable insulation as compared to the discharge voltage produced by a surge arrester at the cable termination discharging a direct stroke.

#### 3.1.4 Surge impedance discontinuity with surge arrester

An arrester located at the discontinuity junction appears as a virtual voltage source to the cable system, provided that the refracted voltage is sufficient to drive the arrester into conduction. The arrester discharge voltage propagates into the cable.

## 4. Surge arrester operation

### 4.1 Surge arrester discharge voltage

Surge arresters respond to overvoltage by diverting surge current to the ground and limit the surge voltage on the system. Surge arresters develop a discharge voltage across their terminals, which is a function of the magnitude and waveshape of the discharge current wave, arrester class, design, and voltage rating.

### 4.2 Lead length

One significant variable under user control is total connection lead length. This is comprised of the line lead and the ground lead. Line lead length is the distance from the phase conductor tap connection to the line terminal of the arrester. The ground lead length is the distance that the surge current flows from the arrester ground terminal to the common ground/neutral connection with the cable metallic shield. Refer to Figure 2.

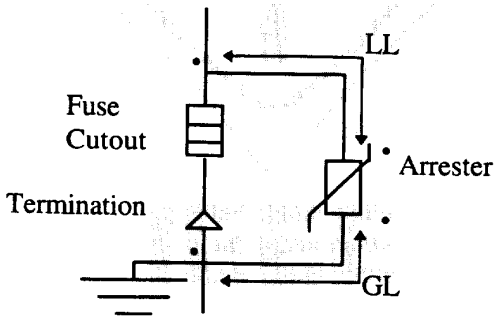


**Figure 2—Line lead and ground lead voltage drop during discharge contribute to total impressed transient voltage**

## 5. Cable system surge arrester protection schemes

### 5.1 Terminal pole arrester scheme

The maximum surge voltage produced by an arrester on the terminal pole is the sum of the arrester discharge voltage (also known as lightning protection level) and the inductive voltage drop $\left[L\frac{di}{dt}\right]$ of the connection leads. This voltage can reflect at the open point of the cable run and double in magnitude. By keeping the total connection lead length as short as possible, the total impressed transient voltage developed by the



Copyright The Institute of Electrical and Electronics Engineers, Inc.
Provided by IHS under license with IEEE
No reproduction or networking permitted without license from IHS Not for Resale

arrester installation is minimized. This arrester scheme provides the least margin of protection for the cable system, compared to those described in 5.2 and 5.3.

### 5.2 Terminal pole and open point arrester scheme

To reduce the reflected wave magnitude on an underground cable circuit, open point arresters should be considered. Open point arresters are intended only to limit the transient voltage reflection, usually have less energy absorption capability than the terminal pole arrester, and are intentionally selected to have higher V-I characteristics than the terminal pole arrester. This is required to ensure the open point arrester characteristics coordinate so the majority of the surge current is discharged at the terminal pole and not by the open point arrester.

### 5.3 Terminal pole, mid-point, and open-point arrester scheme

Improved protection is provided by the use of surge arresters at the terminal pole, mid-point of the cable run and at the open point. This scheme is more expensive than the other two previously discussed. Under the same coordination assumption as discussed above for the terminal pole and open point arrester scheme, the mid-point arrester will limit the reflected voltage on the cable. Users are cautioned against locating the mid-point arrester too close to the open point arrester since its effectiveness can be compromised. A minimum separation of 50-100 m has been suggested [B4], [B14]. Further improvements in protection may be realized by the use of multiple mid-point arresters. The actual margin of protection may vary depending upon each specific case, and users are cautioned to observe the note in 9.3 regarding this scheme.

## 6. Lightning data

### 6.1 Multiple current impulses

Studies of lightning suggest that ground discharges are not isolated, individual events. They consist of a series of rapid discharges. The number of discharges are often between 2 to 20, with a mean of 3 to 4, with an average time between discharges of the order of 35 ms. The first stroke will tend to have the highest peak current. The subsequent strokes have faster rise times. Surge arresters may not always be able to survive actual lightning conditions [B5]. The following discuss published data on lightning characteristics.

### 6.2 Surge current magnitude

Recorded lightning data, which was not measured on power systems, shows peak current magnitudes in excess of 100 kA. Available data suggest that less than 90% of discharges exceed 10 kA [B17], [B20]. These data suggest that an 8 µs rise time for estimating the margin of protection may be inadequate.

#### 6.2.1 Lightning data median first stroke characteristics

The following data, are with respect to the first stroke of lightning, not measured on power systems:

— Crest value 31.1 kA
— Maximum steepness 24.4 kA/µs
— Rise time 1.28 µs
— Tail time 77.5 µs

--`,,`,,`-`-`,,`,,`,`,,`---



Copyright The Institute of Electrical and Electronics Engineers, Inc.
Provided by IHS under license with IEEE
No reproduction or networking permitted without license from IHS Not for Resale

### 6.2.2 Lightning data median subsequent stroke characteristics

The following data are, with respect to subsequent strokes of measured lightning, not measured on power systems:

— Crest current 12.3 kA
— Maximum steepness 39.9 kA/μs
— Rise time 0.31 μs
— Tail time 30.2 μs

### 6.2.3 Lightning arrester discharge current characteristics from power system field measurements

Data obtained from field measurements on distribution arresters on medium-voltage overhead distribution lines [B2] are as follows:

a) 90% of all current magnitudes were within the range of
   1) First stroke: 0.3 to 2.4 kA
   2) Subsequent strokes: 0.3 to 2.6 kA
b) Maximum stroke current
   3) First stroke: 28 kA
   4) Subsequent strokes: 20 kA

### 6.2.4 Implications for insulation coordination studies

It is estimated that 2% of arresters discharge 20 kA or higher current impulses each year. It is common practice to use 10 kA for shielded circuits or 20 kA for unshielded circuits as the coordinating current value in margin-of-protection calculations [B14].

## 6.3 Rise time

It has been traditional to use 8/20 as the representative current wave. Published data [B2], [B17], [B20] indicate that rise times can be faster than 1 μs. The rise time of the initial stroke tends to be slower than the subsequent strokes. A more recent study [B3] with rocket triggered lightning indicated a 1.5 μs average rise time for an experimental overhead distribution line system induced surges. Calculations using slower rise times, such as 8 μs, will estimate higher margins of protection than may be actually available. Lightning is a highly variable phenomenon and strong correlation has not been established between rise time or related rates of rise and current magnitude. Users may want to consider rise times of the order of 1–2 μs, which is the range listed in IEEE Std C62.22-1991.

## 6.4 Bi-polar surges

It is possible to have surges with both positive and negative components that can result in voltage reflection of both polarities. In the worst case of no open-point protection, there can be voltage quadrupling [B1].



Copyright The Institute of Electrical and Electronics Engineers, Inc.
Provided by IHS under license with IEEE
No reproduction or networking permitted without license from IHS Not for Resale

# 7. Cable system impressed transient voltage

## 7.1 Total impressed transient voltage

Of concern to the user is the total voltage developed across cable system insulation during surge discharge. Total impressed transient voltage is the sum of the arrester discharge voltage, the inductive voltage drop in the connecting leads, and reflection.

## 7.2 Arrester discharge voltage

Arresters develop a discharge voltage across their terminals during surge current discharge, which is a function of the magnitude and waveshape of the current, the arrester class, design, and voltage rating.

## 7.3 Connection lead length voltage drop

Arresters are shunt devices with physical connections between the power system phase conductor and system ground. During discharge, there is voltage drop in the line lead (LL) and the ground lead (GL), which is additive to the arrester discharge voltage. See Figure 2.

This inductive voltage drop can be estimated by equation 2 as follows:

$$L\frac{di}{dt} = L_{LL}\frac{di}{dt} + L_{GL}\frac{di}{dt} \quad (2)$$

where

$L\frac{di}{dt}$ is the connecting lead wire total inductive voltage drop in kV
$L_{LL}$ is the line connection lead inductance (μH/meter) × total length (meters)
$L_{GL}$ is the ground connection lead inductance(μH/meter) × total length (meters)
$\frac{di}{dt}$ is the surge current rate of rise, kA/μs

NOTE—To include separation effect, refer to IEEE Std C62.22-1991.

### 7.3.1 Complex, dynamic systems depending upon grounding connection arrangements that are not considered

Depending upon the surge impedance of the parallel available grounding conductors (pole ground and overhead system neutral), surge current may flow only in one conductor or be shared by the parallel ground paths. With certain grounding conductor training, a condition can exist where magnetic fields cancel. This effectively reduces the ground lead length. The methods suggested in this guide to estimate margins of protection do not consider such complex conditions, but do include simplifying assumptions that are noted in the discussion of Figures 3–6.

## 7.4 Sum of impressed transient voltage components

Figure 2 shows the components that contribute to total impressed transient voltage for the terminal pole arrester. The components are

a) Arrester discharge voltage (also known as the lightning protection level, LPL)
b) Line lead connection inductive voltage drop



Copyright The Institute of Electrical and Electronics Engineers, Inc.
Provided by IHS under license with IEEE
No reproduction or networking permitted without license from IHS Not for Resale

c) Ground lead connection inductive voltage drop

The connection lead inductive voltage drop component is also defined in equation 3.

$$TTV_{TP} = LPL_{TP} + L_{TP}\frac{di}{dt} \quad (3)$$

where

$TTV_{TP}$ is the total impressed transient voltage at terminal pole arrester, kV
$LPL_{TP}$ is the lightning protection level of terminal pole arrester, kV
$L_{TP}\frac{di}{dt}$ is the total terminal pole arrester connecting lead wire inductive voltage drop, kV

### 7.5 Lead inductance

The inductance of typical connection leads is 1.31 µH/m. This value has been determined empirically [B14].

### 7.6 Lead voltage build drop

A typical value for the connection lead inductive voltage drop is 5.25 kV/m with a rate of rise of 4 kA/µs. This value has been determined empirically [B14]. Table 1 compares the connection lead inductive voltage drop per unit length for rise times from 1–8 µs for 10 kA and 20 kA current impulses. These values may be substituted into equation 3 when multiplied by the appropriate total lead connection length. Estimates for other rise times and peak current values can be calculated by interpolation since connection lead discharge voltage is a linear function.

**Table 1—Lead inductive voltage drop per unit length**

| Rise Time, µs | 10 kA | | 20 kA | |
|---|---|---|---|---|
| | kA/µs | $L\left(\frac{di}{dt}\right)$/m, kV/m | kA/µs | $L\left(\frac{di}{dt}\right)$/m, kV/m |
| 1 | 10 | 13.12 | 20 | 26.25 |
| 2 | 5 | 6.56 | 10 | 13.12 |
| 4 | 2.5 | 3.28 | 5 | 6.56 |
| 8 | 1.25 | 1.64 | 2.5 | 3.28 |

## 8. Open-point protection

### 8.1 No-open point arrester

If no-open point protection is used, the total impressed transient surge voltage (equation 3) can double in value, for sufficiently long cable runs, and subject the cable system to high overvoltage. Open-point protection has not been used historically on 15 kV class systems with 95 kV BIL. Traditional margin of protection studies utilizing the 8 µs rise time may also ignore the effects of connection lead inductive voltage drop. These studies may estimate adequate protection, but actually understate the actual margin. When faster



Copyright The Institute of Electrical and Electronics Engineers, Inc.
Provided by IHS under license with IEEE
No reproduction or networking permitted without license from IHS Not for Resale

waves and connection lead inductive voltage drop are considered, a terminal pole arrester, without an open-point arrester, may not provide adequate protection.

### 8.2 With open-point protection

The actual reflection at an open point is an improved case. The simplified situations considered here only consist of the sum of the following:

a) The discharge voltage of the terminal pole arrester
b) Terminal pole arrester total line lead inductive voltage drop
c) 50% of the open point arrester discharge voltage for a 1.5 kA 8/20 discharge
d) Open-point arrester total line lead inductive voltage drop

From a practical point of view, there is approximately a 30% reflection of the terminal pole arrester total impressed transient voltage [B4]. Since light duty arresters are often used for open-point protection, their V–I characteristics are set above the arrester used at the terminal pole. This is to avoid the open point arrester discharging the majority of the surge current, which may exceed its capability. Partial reflection is a result of the higher V–I characteristics.

The open-point arrester may have up to a 50% reflection of its discharge voltage and total connection length inductive voltage drop [B4], [B6], which is additive to the terminal pole arrester total impressed transient voltage. The line-lead and ground-lead lengths vary depending upon the open-point arrester technology. For example, a liquid immersed arrester may have virtually no lead length, whereas a dead-front arrester usually has a 0.91 m long ground lead to permit hotstick operation.

Open-point protection has not been historically used on 15 kV class systems with 95 kV BIL. Open-point arresters are commonly used on 25 kV class systems and are highly recommended on 35 kV class systems.

## 9. Margins of protection

### 9.1 Arrester at terminal pole only

The margin of protection can be estimated using equation (4). This calculation does not consider the front-of-wave response. Other sources are available to provide guidance for consideration of the front-of-wave protection [B4], [B12], [B13].

$$PM_{TP} = \left(\frac{BIL}{(2 \cdot TTV_{TP})} - 1\right) \cdot 100 \quad (4)$$

An alternative form of equation 4 is

$$PM_{TP} = \left(\frac{BIL - (2 \cdot TTV_{TP})}{(2 \cdot TTV_{TP})}\right) \cdot 100$$

where

$PM_{TP}$ is the full-wave protection margin for terminal pole arrester, %
$BIL$ is the basic impulse insulation level of protected equipment, kV
$TTV_{TP}$ is $LPL_{TP} + L_{TP}\frac{di}{dt}$, kV



Copyright The Institute of Electrical and Electronics Engineers, Inc.
Provided by IHS under license with IEEE
No reproduction or networking permitted without license from IHS Not for Resale

## 9.2 Arresters at terminal pole and open point

When an open-point arrester is used in conjunction with a terminal pole arrester, equation 4 shall be used for the partial wave reflection. The margin of protection estimate suggests the protection provided at an interim point where the maximum voltage occurs.

$$PM_{OP} = \left(\frac{BIL}{TTV_{TP} + (0.5 \cdot TTV_{OP})}\right) \cdot 100 \quad (5)$$

where

$PM_{OP}$ is the full wave protective margin in for terminal pole and open point arresters, %

$TTV_{OP}$ is the $LPL_{OP} + L_{OP}\frac{di}{dt}$, kV

$LPL_{OP}$ is the lightning protection level of open point arrester, kV

$L_{OP}\frac{di}{dt}$ is the open point arrester connecting wire lead voltage drop, kV

NOTES

1—To calculate the open point di/dt, divide the 1.5 kA surge current by the selected rise time. For example, 1.5 kA/2 µs = 0.75 kA/µs.

2—The method to estimate the total voltage on the cable after reflection with an open point arrester is based upon historic performance data for the sparkover of silicon-carbide arresters [B6]. Use of gapless metal-oxide varistor arresters will result in lower reflected voltage. Computer models that consider metal-oxide arrester performance will yield solutions with different margins. These models may also allow simulation of the effects of multiple reflections including cable taps. Equation 5 will provide sufficient accuracy to estimate if improved protection is required.

## 9.3 Arresters at terminal pole, mid-span and open point

Use of additional arresters can further improve the margin of protection, provided certain minimum separation distances are maintained [B4]. The additional arresters prevent voltage doubling and limit the overvoltage on the cable to that of the terminal pole arrester maximum surge voltage.

$$PM_{MA} = \left(\frac{BIL}{TTV_{TP}} - 1\right) \cdot 100 \quad (6)$$

where

$PM_{MA}$ is the full wave protective margin in % for terminal pole and multiple arresters on the cable circuit

NOTE—Equation 6 is a simplified solution, and does not address all possible field situations. The margin estimate may not be accurate if there is only one mid-span arrester on the cable circuit somewhere between the terminal-pole arrester and open-point arrester. More rigorous solutions using computer programs suggest that for fast rising impulses, better protection is provided if the mid-span arrester is located close to the terminal pole in order to limit the high $L_{TP}\frac{di}{dt}$ effect. Alternatively, for other cases, better protection may be provided by placement of the mid-span arrester closer to the open-point arrester. There are a large number of variables involved in a rigorous analysis, and users are cautioned against using equation 6 as their only estimation method of the margin of protection. As a case-in-point, arresters located on every transformer on a cable circuit may not provide adequate protection of the cable for fast rising impulses with a terminal pole arrester with long connection leads.


Copyright The Institute of Electrical and Electronics Engineers, Inc.
Provided by IHS under license with IEEE
No reproduction or networking permitted without license from IHS Not for Resale

### 9.4 Historical minimum margin of protection

The IEEE Std C62.22-1991 recommendation is a minimum margin of protection greater than or equal to 20% [B14]. While there is some debate over increasing the minimum value, there is no consensus as to what value might be appropriate.

## 10. Terminal pole installation techniques

By equation 4, it is clear that one major variable in protection is the connection lead inductive voltage drop. For any of the schemes considered, protection is maximized by keeping connection lead lengths to an absolute minimum.

NOTE—The following figures are intended to highlight typical connection methods of terminal pole arresters used to protect cable runs. For simplicity, various elements in an actual installation may have been modified, have not been shown, or may be shown in a discontinuous manner, such as the system neutral conductor. The objective of the figures is to identify for the user how various arrester installation methods contribute to total impressed transient voltage. The figures are not intended to represent comprehensively all components of actual terminal pole construction.

### 10.1 Unjacketed concentric neutral cable using neutral wires or cable with semi-conducting jacket as pole ground with tap connection off riser

Figure 3 represents a terminal pole using an unjacketed concentric neutral cable or cable with a semi-conducting jacket as the pole ground conductor. The arrester line lead is tapped off of the riser between the phase conductor and fuse cutout. The line-lead length (LL) is identified in the figure. The cable neutral wires are also used as the pole ground, and this makes for a unique case with respect to total ground lead length. The total ground-lead length (GL) is the distance from the ground terminal of the arrester to the base of the cable termination, which consists of the following two conductor sections: (1) arrester ground terminal to overhead neutral, and (2) overhead neutral to cable termination base.

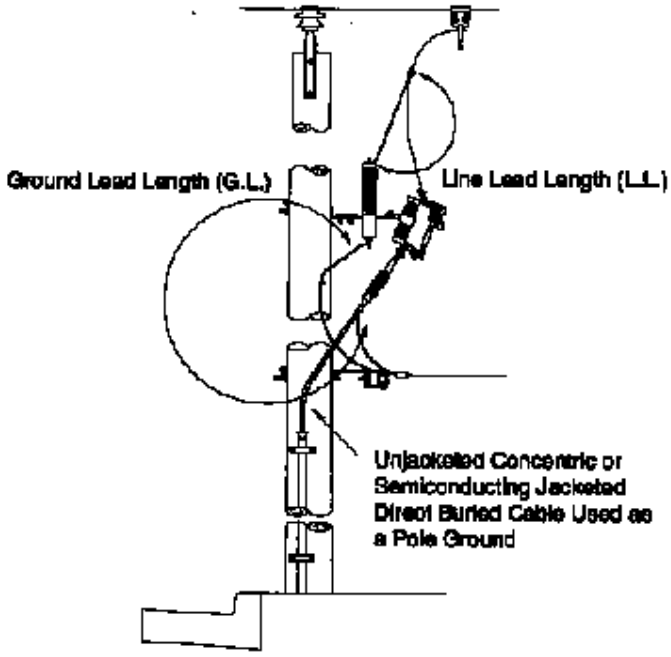


NOTE—No consideration is given to effects of opposing magnetic fields in the conductor sections between the arrester ground terminal and cable termination base.

**Figure 3—Unjacketed concentric neutral or semi-conducting jacketed cable which is direct buried and used as the pole ground**



Copyright The Institute of Electrical and Electronics Engineers, Inc.
Provided by IHS under license with IEEE
No reproduction or networking permitted without license from IHS Not for Resale

### 10.1.1 Assumption

It is very likely that the surge current will flow down the cable concentric neutral wires into the earth because of the low inductance presented by the concentric neutral wires. It is assumed the overhead neutral conductor and subsequent grounds present a higher surge impedance than the cable neutral wires and cable system ground connections. If the surge current did flow along the overhead neutral conductor and not to ground via the concentric neutral wires, the total ground lead length would be the conductor length from the arrester ground terminal to the overhead system neutral connection point.

## 10.2 Jacketed cable with separate pole ground with tap connection off riser

Figure 4 shows a comparable installation to Figure 3, except for the use of insulated jacketed cable and a separate pole ground conductor. The line lead length is the same; however, the total ground-lead length is reduced and limited to the bond point between the arrester grounding conductor and the overhead system neutral conductor. This arrangement would provide a higher margin of protection than the case shown in Figure 3 by virtue of less total lead connection length.

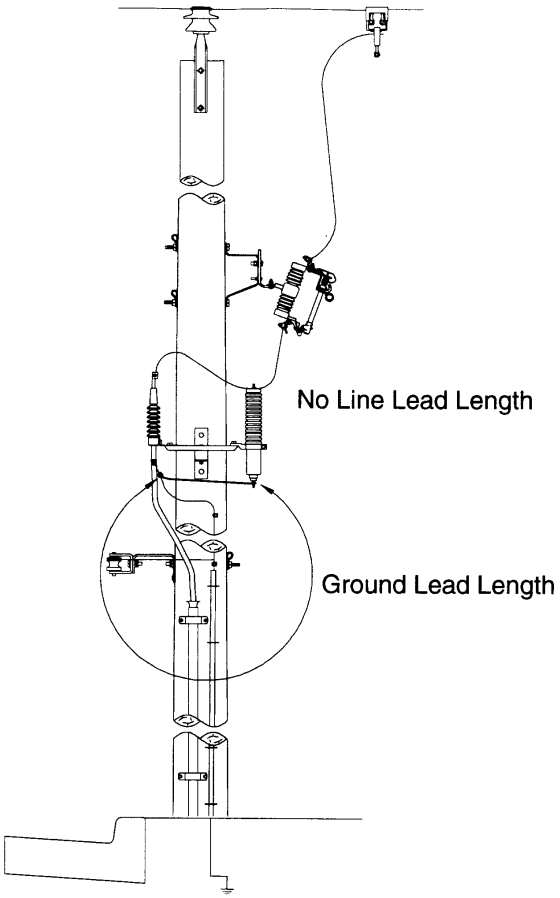


NOTE—It is assumed all surge current flows down the pole ground and not along the cable concentric neutral wires.

**Figure 4—Insulating jacketed cable with separate pole ground conductor**


Copyright The Institute of Electrical and Electronics Engineers, Inc.
Provided by IHS under license with IEEE
No reproduction or networking permitted without license from IHS Not for Resale

### 10.2.1 Simplifying assumption

With an insulating cable jacket, a complex dynamic condition is possible with respect to grounding conductor surge impedance. The cable concentric neutral wires have relatively low surge impedance. If the combination of the low surge impedance of the cable neutral wires and surge impedance of the first ground connection of the cable run has a lower surge impedance than the pole ground, there may be a division of surge current or total surge current flow in the cable neutral wires. With an insulating jacket, there could be a voltage rise on the cable neutral circuit, resulting in a different overvoltage on the insulated conductor from the case where the surge current completely flows along the pole ground.

In the case of surge current sharing or for all surge current flowing along the cable neutral wires, opposing magnetic fields are created by the parallel leads with opposite current flow. The magnetic field created by current flow from the arrester ground terminal to the overhead system neutral conductor is opposed by the magnetic field resulting from the current flow from the overhead neutral conductor to the cable or base of the cable termination.

The simplifying assumption made in this figure is that all current flows down the pole ground for purposes of estimating lead length and lead length discharge voltage.

## 10.3 Equivalent electrical circuit for arrester installation

Figure 5 shows the equivalent electrical circuit for an arrester installation on a terminal pole. The contributors to total impressed transient voltage at the terminal pole are the following:

a) Line lead inductive voltage drop
b) Arrester discharge voltage
c) Ground lead inductive voltage drop

For simplicity, the shielded power cable is shown as a co-axial cable and not as a distributed model.

Larger than necessary conductors do not have a material effect on lead inductive voltage drop, since it is the resistance and not inductance that decreases with increasing cross-section. Lead inductance, which is a function of length, is the only variable that can be influenced by the installation technique.



Copyright The Institute of Electrical and Electronics Engineers, Inc.
Provided by IHS under license with IEEE
No reproduction or networking permitted without license from IHS Not for Resale

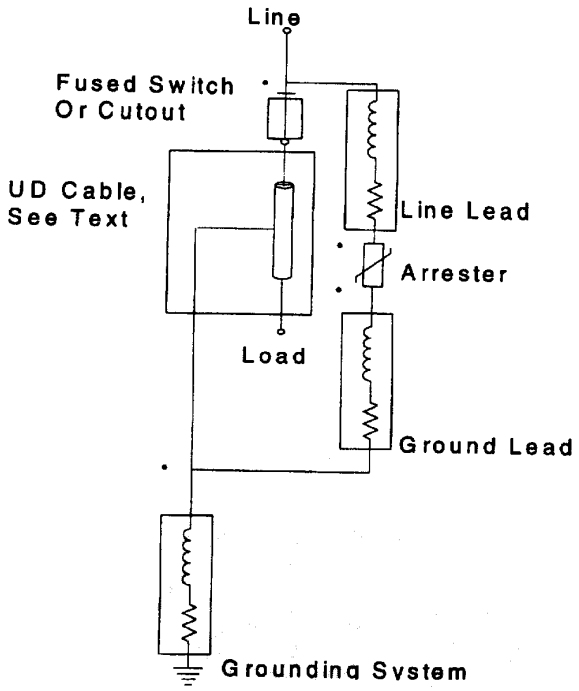


NOTE—No impedance is shown for the cable neutral wires since it is assumed there is no discharge current flow along the cable neutral wires.

**Figure 5—Equivalent electric circuit to identify components of maximum surge voltage**

## 10.4 Jacketed cable with separate pole ground with riser run through arrester

Figure 6 represents an improved construction technique. The line lead connection inductive voltage drop is insignificant. The arrester ground lead is run from the arrester to the cable metallic shield and then connected to the system/pole ground. With this method, an inductive voltage drop is produced in the conductor between the arrester ground terminal and cable or cable termination base during surge discharge.

## 10.5 Reduced ground lead length

Figure 7 illustrates a reduction in ground lead length. The grounding conductor is trained from the termination ground to the arrester ground terminal, and then to the system ground. By doing so, there is no inductive voltage drop in the arrester grounding conductor between the termination and arrester. This technique may not always be practical to utilize. When arresters are fitted with ground lead disconnectors, the connection method shall allow the disconnector to drop away from the arrester if it operates. This means the ground lead shall have sufficient flexibility and slack. Depending upon the specific cable construction, the neutral wires may be too stiff to allow the disconnector to fall with sufficient clearance.

Figure 8 is the electrical circuit equivalent for Figure 7, where the total impressed transient voltage is reduced to that of the arrester discharge voltage.


Copyright The Institute of Electrical and Electronics Engineers, Inc.
Provided by IHS under license with IEEE
No reproduction or networking permitted without license from IHS Not for Resale

### 10.5.1 Simplifying assumptions

Implicit in the discussion of Figure 7 is the assumption that all surge current flows down the pole ground. If surge current were to flow along the cable neutral wires, there would be an inductive voltage drop component in the conductor between the arrester ground terminal and cable or cable termination base as well as along the cable neutral wire run to the first ground connection. This situation is similar to Figure 6.

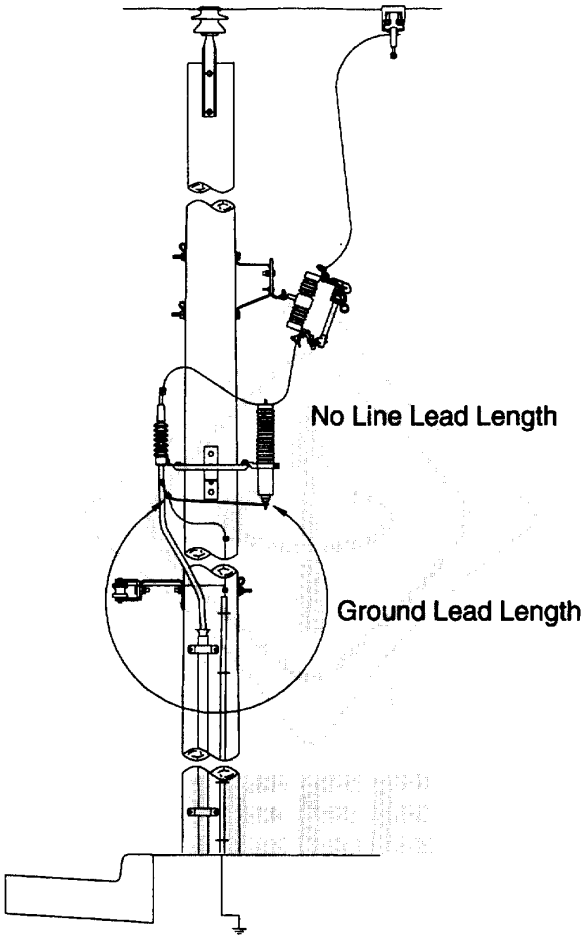


NOTE—This is a conservative estimate since there is a minimal L (di/dt) subtractive discharge voltage in the conductor between the arrester line terminal and cable termination. It is also assumed all discharge current flows down the pole ground.

**Figure 6—Reduced line lead length by training line lead through arrester Ground lead run from arrester to cable**

## 10.6 Use of coiled line lead discouraged

Figure 9 is intended to depict a construction practice that is not recommended. While use of a preformed coil may make it easier to install the arrester, the conductor coil increases the inductive voltage drop and reduces the protection. Similarly, a coiled lead on the load side of the arrester line tap lead may ease installation.



Copyright The Institute of Electrical and Electronics Engineers, Inc.
Provided by IHS under license with IEEE
No reproduction or networking permitted without license from IHS
Not for Resale

However, this coil inductance may cause an increase in the arrester discharge current and also reduce the protective level.

## 11. Recommendations

The recommendations of this guide are as follows:

— Apply arresters using installation techniques which minimize total impressed transient voltage at the terminal pole. Minimal connection lead length will help to achieve the objective.

— Open point and mid-point arresters may be necessary to achieve desired margins of protection even for 15 kV class systems.

— When estimating margins of protection, rise times faster than 8 μs should be considered. There are no strong correlations between rates of rise and surge current magnitude. Average rise times of 1.5 μs have been measured experimentally. Users should consider rise times of 1–2 μs in their calculations.

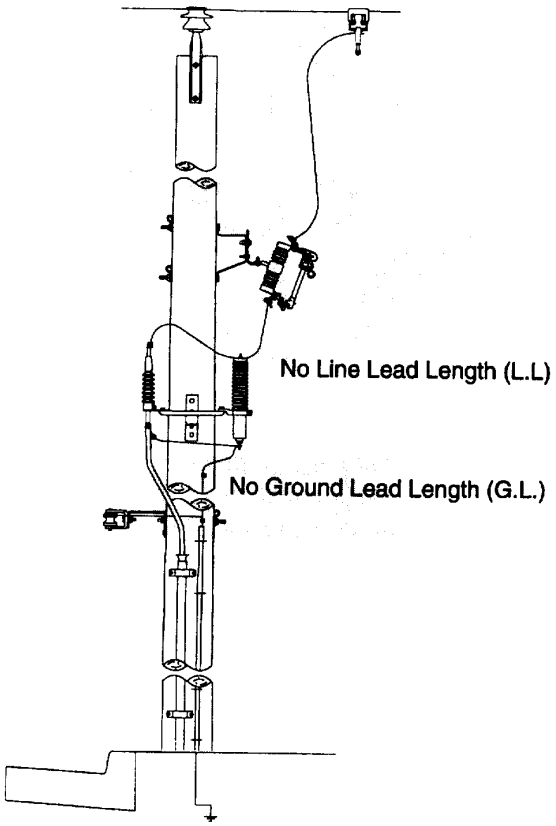


NOTE—The comments regarding line lead separation effect apply here. Cable metallic shield run to arrester ground terminal and then to system/pole ground to minimize ground lead length. It is assumed all surge current flows down pole ground.

**Figure 7—Same as Figure 6 except ground lead run from cable to arrester to system ground**


Copyright The Institute of Electrical and Electronics Engineers, Inc.
Provided by IHS under license with IEEE
No reproduction or networking permitted without license from IHS Not for Resale

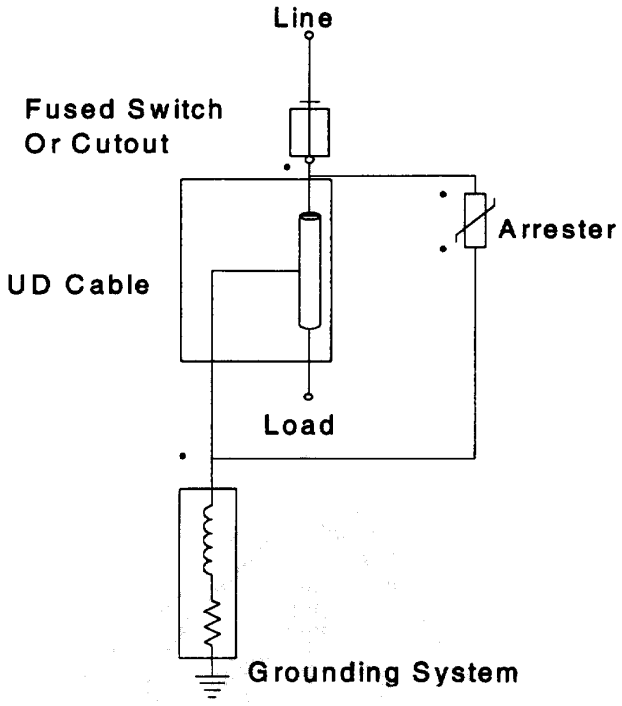


NOTE—Line lead separation effect and discharge current flow along the cable neutral wires are not considered.

**Figure 8—Equivalent electric circuit of Figure 7, where line lead and ground-lead lengths have been minimized, represented by the absence of lead impedance compared to Figure 5**

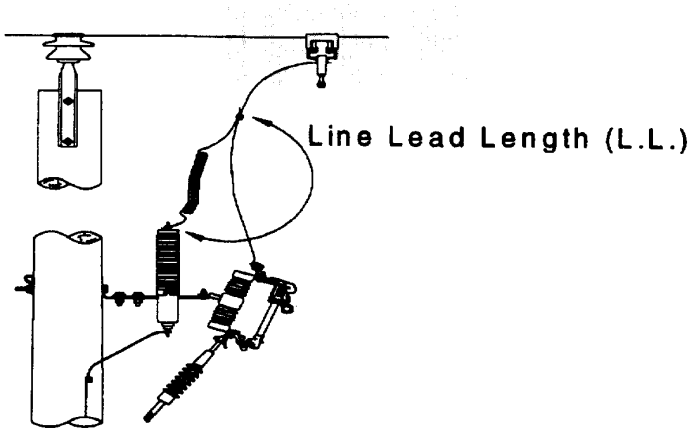


**Figure 9—Arrester line lead coil discouraged as standard construction because of increased inductive voltage drop**



Copyright The Institute of Electrical and Electronics Engineers, Inc.
Provided by IHS under license with IEEE
No reproduction or networking permitted without license from IHS
Not for Resale

# Annex A

(informative)

# Margin of protection calculation examples

## A.1 Margin of protection calculation examples

NOTES

1—The following practical examples utilize the equations previously developed to estimate the margin of protection. All of the simplifying assumptions discussed are utilized. Commercial software programs may employ more sophisticated models with more complicated and rigorous solution techniques that may yield different solutions. Users need to be aware of the specific methodology used by different methods of analysis to avoid possible confusion among their respective solutions. The margin estimates at 8 μs and 1 μs are intended to show the variation possible, depending upon the rise time selected in the analysis.

2—Estimates of margins of protection will vary with the electrical characteristics of the arrester being used for the same method of analysis. Discharge voltage characteristics vary by arrester class, design, and voltage rating. As an example, the discharge voltage of a riser pole-type arrester is lower than a heavy-duty distribution class arrester of the same voltage rating. The following examples are illustrations of how to calculate margins of protection, and it is suggested that users utilize arrester characteristics for products installed on their system or under consideration for installation. The following are only examples for the simplistic cases described, which may not accurately reflect a user's specific system conditions.

### A.1.1 Fifteen (15) kV class system

#### A.1.1.1 Without open-point protection

The system is 15 kV class (95 kV BIL) with a 10 kV heavy-duty distribution class arrester at the terminal pole, 1.52 m total lead length, and no open-point arrester. The selected 10 kV arrester has a published 33.3 kV discharge voltage at 10 kA. Assume a 2 μs rise time.

Equation 4 is used to estimate the margin of protection.

$$PM_{TP} = \left(\frac{BIL}{(2 \cdot TTV_{TP})} - 1\right) \cdot 100$$

Equation 3 is first used to calculate the total impressed transient voltage at the terminal pole, where the lead length inductive voltage drop/unit length is taken from Table 1 as follows:

$$TTV_{TP} = LPL_{TP} + L_{TP}\frac{di}{dt}$$

$$TTV_{TP} = 33.3 \text{ kV} + (6.56 \text{ kV/m}) \cdot 1.52 \text{ m}$$

$$TTV_{TP} = 33.3 \text{ kV} + 10 \text{ kV} = 43.3 \text{ kV}$$

The total impressed transient voltage ($TTV_{TP}$) is substituted into Equation 4.


Copyright The Institute of Electrical and Electronics Engineers, Inc.
Provided by IHS under license with IEEE
No reproduction or networking permitted without license from IHS Not for Resale

$$PM_{TP} = \left(\frac{95kV}{2 \cdot TTV_{TP}} - 1\right) \cdot 100$$

$$PM_{TP} = \left(\frac{95kV}{2 \cdot (43.3)kV} - 1\right) \cdot 100 = (1.10 - 1) \cdot 100$$

$$PM_{TP} = 10\%$$

With a margin below the recommended 20% minimum, this protection scheme is inadequate for the conditions modeled.

Table A.1 summarizes estimated margins of protection for the same 10 kV terminal pole heavy-duty arrester, as a function of total connection lead length, 1–4 m; for 5 kA, 10 kA, and 20 kA current impulses, at two different rise times, 8 and 1 μs; utilizing equation 4. The arrester discharge voltage data used in this example are the following: 31 kV at 5 kA, 33.3 kV at 10 kA, and 37.3 kV at 20 kA.

**Table A.1—Margin of protection example for 15 kV class system 95 kV BIL with 10 kV terminal pole heavy-duty distribution class arrester only**

| Total lead length, m | 8 μs rise | | | 1 μs rise | | |
|---|---|---|---|---|---|---|
| | 5 kA | 10kA | 20 kA | 5 kA | 10kA | 20 kA |
| 1 | 49 | 36 | **17** | 26 | **2** | **–25** |
| 2 | 46 | 30 | **8** | **8** | **–20** | **–47** |
| 3 | 42 | 24 | **1** | **–6** | **–35** | **–59** |
| 4 | 39 | 19 | **–6** | **–17** | **–45** | **–67** |

NOTE—Cases with less than a < 20% margin are bolded.

### A.1.1.2 With open-point arrester

Protection using an open-point arrester can be estimated using equation 5. The following estimate uses the same conditions as the previous case plus a 10 kV open point arrester with a published 1.5 kA discharge voltage of 30.5 kV with a total lead length of 0.91m.

$$PM_{OP} = \left(\frac{BIL}{TTV_{TP} + (0.5 \cdot TTV_{OP})} - 1\right) \cdot 100$$

where

the terminal pole total impressed transient voltage is

$$TTV_{TP} = LPL_{TP} + L_{TP}\frac{di}{dt}$$

$$TTV_{TP} = 33.3 \text{ kV} + (6.56 \text{ kV/m}) \cdot 1.52 \text{ m}$$



Copyright The Institute of Electrical and Electronics Engineers, Inc.
Provided by IHS under license with IEEE
No reproduction or networking permitted without license from IHS Not for Resale

$$TTV_{TP} = 33.3 \text{ kV} + 10 \text{ kV} = 43.3 \text{ kV}$$

The open-point arrester total impressed transient voltage at 1.5 kA is estimated by

$$TTV_{OP} = LPL_{OP} + L_{OP}\frac{di}{dt}$$

$$LPL_{OP} = 30.5 \text{ kV}$$

$$L_{OP}\frac{di}{dt} = \left(1.31\frac{\mu H}{\text{m}} \cdot 0.91 \text{ m}\right) \cdot \left(\frac{1.5 \text{ kA}}{2 \text{ ms}}\right) = 0.9 \text{ kV}$$

$$TTV_{OP} = 30.5 \text{ kV} + 0.9 \text{ kV}$$

$$TTV_{OP} = 31.4 \text{ kV}$$

By substituting the total impressed transient voltage values of the two arresters into equation 5, the margin of protection can be estimated by:

$$PM_{OP} = \left(\frac{BIL}{TTV_{TP} + (0.5 \cdot TTV_{OP})} - 1\right) \cdot 100$$

$$PM_{OP} = \left(\frac{95 \text{ kV}}{43.3 \text{ kV} + (0.5 \cdot 31.4 \text{ kV})} - 1\right) \cdot 100 = (1.61 - 1) \cdot 100$$

$$PM_{OP} = 61\%$$

This scheme provides a margin of protection in excess of the 20% recommended minimum. Table A.2 is a modification of Table A.1, which considers the effect of the open-point arrester for the same conditions.

**Table A.2—Margin of protection example for 15 kV class system, 95 kV BIL with 10 kV terminal pole heavy-duty distribution class arrester, and 10 kV open-point light duty arrester with 0.91 m of total lead length**

| Total Lead Length, m | 8 µs rise | | | 1 µs rise | | |
|---|---|---|---|---|---|---|
| | 5 kA | 10kA | 20 kA | 5 kA | 10kA | 20 kA |
| 1 | 101 | 89 | 70 | 77 | 52 | **19** |
| 2 | 98 | 83 | 60 | 58 | 26 | **–10** |
| 3 | 95 | 77 | 52 | 42 | **7** | **–28** |
| 4 | 91 | 72 | 44 | 29 | **–7** | **–40** |

NOTE—Cases with a < 20% margin are bolded.


Copyright The Institute of Electrical and Electronics Engineers, Inc.
Provided by IHS under license with IEEE
No reproduction or networking permitted without license from IHS Not for Resale

## A.1.2 Twenty-five (25) kV class system

### A.1.2.1 Without open-point protection

The system is 25 kV class (125 kV BIL), an 18 kV heavy-duty distribution class arrester at terminal pole, 1.52 m total lead length, and no open-point arrester. The selected 18 kV arrester has a published 60 kV discharge voltage at 10 kA. Assume 2 μs rise time.

Equation 4 is used.

$$PM_{TP} = \left(\frac{BIL}{(2 \cdot TTV_{TP})} - 1\right) \cdot 100$$

Equation 3 is first used to calculate the total impressed transient voltage at the terminal pole, where the lead length inductive voltage drop/unit length is taken from Table 1 as follows:

$$TTV_{TP} = LPL_{TP} + L_{TP}\frac{di}{dt}$$

$$TTV_{TP} = 60 \text{ kV} + (6.56 \text{ kV/m}) \cdot 1.52 \text{ m}$$

$$TTV_{TP} = 60 \text{ kV} + 10 \text{ kV} = 70 \text{ kV}$$

The total impressed transient voltage ($TTV_{TP}$) is substituted into equation 4.

$$PM_{TP} = \left(\frac{125kV}{(2 \cdot TTV_{TP})} - 1\right) \cdot 100$$

$$PM_{TP} = \left(\frac{125kV}{(2 \cdot 70kV)} - 1\right) \cdot 100 = (0.89 - 1) \cdot 100$$

$$PM_{TP} = -11\%$$

With a negative margin, this protection scheme is inadequate for the conditions modeled, since the total voltage exceeds the system BIL rating.

Table A.3 summarizes estimated margins of protection for the same 18 kV terminal pole heavy-duty arrester only, as a function of total connection lead length, for 5 kA, 10 kA, and 20 kA current impulses, at two different rise times, 8 and 1 μs, utilizing equation (4). The published arrester discharge voltage data used in this example are: 55.8 kV at 5 kA, 60 kV at 10 kA, and 67.2 kV at 20 kA.



Copyright The Institute of Electrical and Electronics Engineers, Inc.
Provided by IHS under license with IEEE
No reproduction or networking permitted without license from IHS Not for Resale

**Table A.3—Margin of protection example for 25 kV class system 125 kV BIL with 18 kv terminal pole heavy-duty distribution class arrester only**

| Total Lead Length, m | 8 µs Rise | | | 1 µs Rise | | |
|---|---|---|---|---|---|---|
| | 5 kA | 10kA | 20 kA | 5 kA | 10kA | 20 kA |
| 1 | **10** | **1** | **–11** | **0** | **–15** | **–33** |
| 2 | **9** | **–1** | **–15** | **–9** | **–28** | **–48** |
| 3 | **7** | **–4** | **–19** | **–17** | **–37** | **–57** |
| 4 | **6** | **–6** | **–22** | **–24** | **–44** | **–64** |

NOTE—Cases with a < 20% margin are bolded.

### A.1.2.2 With open-point arrester

Protection using an open-point arrester can be estimated using equation 5. The following estimate uses the same conditions as the previous case plus an 18kV open-point arrester with a published 1.5 kA discharge voltage of 56.5 kV with a total lead length of 0.91 m.

$$PM_{OP} = \left(\frac{BIL}{TTV_{TP} + (0.5 \cdot TTV_{OP})} - 1\right) \cdot 100$$

where

The terminal pole total impressed transient voltage is

$$TTV_{TP} = LPL_{TP} + L_{TP}\frac{di}{dt}$$

$$TTV_{TP} = 60 \text{ kV} + (6.56 \text{ kV/m}) \cdot 1.52 \text{ m}$$

$$TTV_{TP} = 60 \text{ kV} + 10 \text{ kV} = 70 \text{ kV}$$

The open-point arrester total impressed transient voltage at 1.5 kA is

$$TTV_{OP} = LPL_{OP} + L_{OP}\frac{di}{dt}$$

$$LPL_{OP} = 56.5 \text{ kV}$$

$$L_{OP}\frac{di}{dt} = \left(1.3\frac{\mu H}{\text{m}} \cdot 0.91 \text{ m}\right) \cdot \left(\frac{1.5 \text{ kA}}{2 \text{ ms}}\right) = 0.9 \text{ kV}$$

$$TTV_{OP} = 56.5 \text{ kV} + 0.9 \text{ kV}$$

$$TTV_{OP} = 57.4 \text{ kV}$$



Copyright The Institute of Electrical and Electronics Engineers, Inc.
Provided by IHS under license with IEEE
No reproduction or networking permitted without license from IHS Not for Resale

By substituting the total impressed transient voltage values of the two arresters into equation 5, the margin of protection can be estimated by

$$PM_{OP} = \left(\frac{BIL}{TTV_{TP} + (0.5 \cdot TTV_{OP})} - 1\right) \cdot 100$$

$$PM_{OP} = \left(\frac{125\ \text{kV}}{70\ \text{kV} + (0.5 \cdot 57.4\ \text{kV})} - 1\right) \cdot 100 = (1.27 - 1) \cdot 100$$

$$PM_{OP} = 27\%$$

This scheme provides a margin of protection just over the minimum recommended 20%. Table A.4 is a modification of Table A.3, which considers the effect of the open-point arrester.

**Table A.4—Margin of protection example for 25 kV class system, 125 kV BIL with 18 kv terminal pole heavy-duty distribution class arrester and 18 kV open-point light duty arrester with 0.91 m of total lead length**

| Total lead length, m | 8 µs rise | | | 1 µs rise | | |
|---|---|---|---|---|---|---|
| | 5 kA | 10 kA | 20 kA | 5 kA | 10 kA | 20 kA |
| 1 | 47 | 39 | 26 | 37 | 22 | **2** |
| 2 | 46 | 36 | 22 | 27 | **8** | **–16** |
| 3 | 44 | 34 | **19** | **19** | **–3** | **–29** |
| 4 | 43 | 32 | **15** | **12** | **–12** | **–38** |

NOTE—Cases with a < 20% margin are bolded.

## A.1.3 Thirty-five (35) kV class system

### A.1.3.1 Without open-point protection

The system is 35 kV class (150 kV BIL), a 27 kV heavy-duty distribution class arrester at terminal pole, 1.52 m total lead length, and no open-point arrester. The selected 27 kV arrester has a published 90 kV discharge voltage at 10 kA. Assume 2 µs rise time.

Equation 4 is used.

$$PM_{TP} = \left(\frac{BIL}{2 \cdot TTV_{TP}} - 1\right) \cdot 100$$

Equation 3 is first used to calculate the total transient impressed voltage at the terminal pole, where the lead length inductive voltage drop/unit length is taken from Table 1 as follows:

$$TTV_{TP} = LPL_{TP} + L_{TP}\frac{di}{dt}$$



Copyright The Institute of Electrical and Electronics Engineers, Inc.
Provided by IHS under license with IEEE
No reproduction or networking permitted without license from IHS Not for Resale

$$TTV_{TP} = 90\ \text{kV} + (6.56\ \text{kV/m}) \cdot 1.52\ \text{m}$$

$$TTV_{TP} = 90\ \text{kV} + 10\ \text{kV} = 100\ \text{kV}$$

The total impressed transient voltage ($TTV_{TP}$) is substituted into equation 4.

$$PM_{TP} = \left(\frac{150\ \text{kV}}{(2 \cdot TTV_{TP})} - 1\right) \cdot 100$$

$$PM_{TP} = \left(\frac{150\ \text{kV}}{(2 \cdot 100\ \text{kV})} - 1\right) \cdot 100 = (0.75 - 1) \cdot 100$$

$$PM_{TP} = -25\%$$

With a negative margin, this protection scheme is inadequate for the conditions modeled, since the reflected wave exceeds the system BIL rating.

**Table A.5—Margin of protection example for 35 kV class system 150 kV BIL with 27 kV terminal pole heavy-duty distribution class arrester only**

| Total Lead Length, m | 8 µs rise | | | 1 µs rise | | |
|---|---|---|---|---|---|---|
| | 5 kA | 10 kA | 20 kA | 5 kA | 10 kA | 20 kA |
| 1 | **–11** | **–18** | **–28** | **–17** | **–27** | **–41** |
| 2 | **–12** | **–20** | **–30** | **–23** | **–35** | **–51** |
| 3 | **–13** | **–21** | **–32** | **–27** | **–42** | **–58** |
| 4 | **–14** | **–22** | **–34** | **–32** | **–47** | **–64** |

NOTE—Cases with a < 20% margin are bolded.

Table A.5 summarizes estimated margins of protection for a 27 kV terminal pole heavy-duty arrester only, as a function of total connection lead length, for 5 kA, 10 kA, and 20 kA current impulses, at two different rise times, 8 and 1 µs, utilizing equation 4. The published arrester discharge voltage data used in this example are: 83.7 kV at 5 kA, 90 kV at 10 kA, and 101 kV at 20 kA.

### A1.3.2 With open-point arrester

Protection using an open-point arrester can be estimated using equation 5. The following estimate uses the same conditions as the example above plus a 27 kV open-point arrester with a published 1.5 kA discharge voltage of 85 kV with a total lead length of 0.91 m.

$$PM_{OP} = \left(\frac{BIL}{TTV_{TP} + (0.5 \cdot TTV_{OP})} - 1\right) \cdot 100$$

where

the terminal pole total impressed transient voltage is


Copyright The Institute of Electrical and Electronics Engineers, Inc.
Provided by IHS under license with IEEE
No reproduction or networking permitted without license from IHS Not for Resale

$$TTV_{TP} = LPL_{TP} + L_{TP}\frac{di}{dt}$$

$$TTV_{TP} = 90\text{ kV} + 6.56\text{ kV/m} \cdot 1.52\text{ m}$$

$$TTV_{TP} = 90\text{ kV} + 10\text{ kV} = 100\text{ kV}$$

The open-point arrester total impressed transient voltage is

$$TTV_{OP} = LPL_{OP} + L_{OP}\frac{di}{dt}$$

$$LPL_{OP} = 85\text{ kV}$$

$$L_{OP}\frac{di}{dt} = \left(1.31\frac{\mu H}{\text{m}} \cdot 0.91\text{ m}\right) \cdot \frac{1.5\text{ kA}}{2\text{ ms}} = 0.9\text{ kV}$$

$$TTV_{OP} = 85\text{ kV} + 0.9\text{ kV}$$

$$TTV_{OP} = 85.9\text{ kV}$$

By substituting the total impressed transient voltage values of the two arresters into equation 5, the margin of protection can be estimated by

$$PM_{OP} = \left(\frac{BIL}{TTV_{TP} + (0.5 \cdot TTV_{OP})} - 1\right) \cdot 100$$

$$PM_{OP} = \left(\frac{150\text{ kV}}{100\text{ kV} + (0.5 \cdot 85.9\text{ kV})} - 1\right) \cdot 100 = (1.05 - 1) \cdot 100$$

$$PM_{OP} = 5\%$$

This scheme provides an inadequate margin of protection. Table A.6 is a modification of Table A.5, which considers the effect of the open point arrester.

**Table A.6—Margin of protection example for 35 kV class system 150 kV BIL with 27 kV terminal pole heavy-duty distribution class arrester only**

| Total lead length, m | 8 µs rise | | | 1 µs rise | | |
|---|---|---|---|---|---|---|
| | 5 kA | 10 kA | 20 kA | 5 kA | 10 kA | 20 kA |
| 1 | **18** | **12** | **2** | **12** | **2** | **–12** |
| 2 | **17** | **10** | **0** | **7** | **–6** | **–24** |
| 3 | **16** | **9** | **–2** | **2** | **–13** | **–33** |
| 4 | **16** | **8** | **–4** | **–2** | **–19** | **–40** |

NOTE—Cases with a < 20% margin are bolded.



Copyright The Institute of Electrical and Electronics Engineers, Inc.
Provided by IHS under license with IEEE
No reproduction or networking permitted without license from IHS
Not for Resale

**Table A.7—Margin of protection example for 35 kV class system,150 kV BIL with 27 kV terminal pole heavy-duty distribution class arrester, and 27 kV open-point light duty arrester with 0.91 m of total lead length**

| Total lead length, m | 8 µs rise | | | 1 µs rise | | |
|---|---|---|---|---|---|---|
| | 5 kA | 10 kA | 20 kA | 5 kA | 10 kA | 20 kA |
| 1 | 77 | 64 | 44 | 66 | 45 | **18** |
| 2 | 76 | 61 | 39 | 55 | 29 | **–2** |
| 3 | 74 | 58 | 35 | 45 | **16** | **–17** |
| 4 | 72 | 55 | 31 | 36 | **5** | **–27** |

NOTE—Cases with a < 20% margin are bolded.

### A.1.3.3 With open-point and mid-point arrester

Margins may be improved with the use of a mid-point arrester. With the mid-point arrester, the voltage on the cable conductor may be limited to the total impressed transient voltage at the terminal pole. Refer to the note in 9.3 regarding the accuracy of this specific method of analysis.

$$PM_{MA} = \left(\frac{BIL}{TTV_{TP}} - 1\right) \cdot 100$$

where

$$TTV_{TP} = LPL_{OP} + L_{TP}\frac{di}{dt}$$

$$TTV_{TP} = 90 \text{ kV} + 6.56 \text{ kV/m} \cdot 1.53 \text{ m}$$

$$TTV_{TP} = 90 \text{ kV} + 10 \text{ kV} = 100 \text{ kV}$$

substituting into equation 6

$$PM_{MA} = \left(\frac{BIL}{TTV_{TP}} - 1\right) \cdot 100$$

$$PM_{MA} = \left(\frac{150kV}{100kV} - 1\right) = (1.50 - 1)$$

$$PM_{MA} = 50\%$$

By eliminating reflection at the open point, the suggested minimum margin of protection is maintained for the majority of cases.



Copyright The Institute of Electrical and Electronics Engineers, Inc.
Provided by IHS under license with IEEE
No reproduction or networking permitted without license from IHS Not for Resale

# Annex B

(informative)

# Bibliography

For further reading and to assist in better understanding of this guide, the following documents may be of value to the reader.

[B1] Barker, P., "Voltage Quadrupling On a UD Cable," *IEEE Transactions on Power Delivery*, vol. 5, no. 1, pp. 498-501, Jan. 1990.

[B2] Barker. P., et al, "Characteristics Of Lightning Surges Measured At Metal Oxide Distribution Arresters," *IEEE Transactions on Power Delivery*, vol. 8, no. 1, pp. 301–310, Jan. 1993.

[B3] Barker, P., Short, T., Eybert-Berard, A., and Berlandis, J., "Induced Voltage Measurements On An Experimental Distribution Line During Nearby Rocket Triggered Lightning Flashes," *IEEE Transactions on Power Delivery*, vol. 11, no. 2, pp. 980-995, Apr. 1996.

[B4] Canadian Electric Association CEA 077 D 184A, *Application Guide For Surge Arresters on Distribution Systems*.

[B5] Darveniza, M. et al, "Laboratory Studies Of The Effects Of Multiple Lightning Currents On Distribution Surge Arresters", *IEEE Transactions on Power Delivery*, vol. 8, no. 3, pp. 1035–1044, July 1993.

[B6] EPRI Report EL-720, "Surge Behavior of UD Cable Systems", Project 795-1, Final Report, Apr. 1978.

[B7] Hartlein, R. et al, "Effects Of Voltage Impulses On Extruded Dielectric Cable Life", *IEEE Transactions on Power Delivery*, vol. 4, no. 2, pp. 829–841, Apr. 1989.

[B8] Hartlein, R. et al, "Effects Of Voltage Impulses On Extruded Dielectric Cable Life Project Update," *IEEE Trans. on Power Delivery*, vol. 9, no. 2, pp. 611–619, Apr. 1994.

[B9] Hopkinson, R., "Better Surge Protection Extends Cable Life," *IEEE Transactions on Power Delivery*, vol-PAS-103, no. 10, pp. 2827-2836, Oct. 1984.

[B10] IEC Std 99-4 1991-11, Surge arresters Part 4: Metal-oxide surge arresters without gaps for ac systems.

[B11] IEEE Std C62.1-1989, IEEE Standard for Gapped Silicon-Carbide Surge Arresters for AC Power Systems (ANSI).

[B12] IEEE Std C62.2-1987 IEEE Guide for the Application of Gapped Silicon-Carbide Arresters on AC Power Systems (ANSI).

[B13] IEEE Std C62.11-1993, IEEE Standard for Metal-Oxide Surge Arresters for AC Power Circuits (ANSI).

[B14] IEEE Std C62.22-1991, IEEE Guide for the Application of Metal-Oxide Arresters for Alternating-Current Systems (ANSI).

[B15] IEEE Std C62.92-1987, IEEE Guide for the Application of Neutral Grounding in Electrical Utility Systems, Part I—Introduction (ANSI).



Copyright The Institute of Electrical and Electronics Engineers, Inc.
Provided by IHS under license with IEEE
No reproduction or networking permitted without license from IHS Not for Resale

[B16] IEEE Std C62.92.4-1987, IEEE Guide for the Application of Neutral Grounding in Electrical Utility Systems, Part IV—Distribution (ANSI).

[B17] *Lightning Protection Manual For Rural Electric Systems*, Rural Electric Research Project 92-12, National Rural Electric Cooperative Association, 1993.

[B18] McDermott, T. et al, “Lightning Protection Of Distribution Lines,” *IEEE Transactions on Power Delivery*, vol. 9, no. 1, pp. 138–152, Jan. 1994.

[B19] Mousa, A., “The Soil Ionization Gradient Associated With Discharge Of High Currents Into Concentrated Electrodes,” *IEEE Trans. on Power Delivery*, vol. 9, no. 3, pp. 1669–1677, July 1994.

[B20] “Working Group Report: Calculating The Lightning Performance Of Distribution Lines,” *IEEE Transactions on Power Delivery*, vol. 5, no. 3, pp. 1408-1417, July 1990.



Copyright The Institute of Electrical and Electronics Engineers, Inc.
Provided by IHS under license with IEEE
No reproduction or networking permitted without license from IHS Not for Resale