Recognized as an
American National Standard (ANSI)

IEEE Std C57.21™-1990(R2004)
(Revision of IEEE Std C57.21-1981)

IEEE Standard Requirements, Terminology, and Test Code for Shunt Reactors Rated Over 500 kVA

Sponsor

Transformer Committee
of the
IEEE Power Engineering Society

Reaffirmed 6 January 2005
Approved 9 August 1991
American National Standards Institute

Reaffirmed 24 June 2004
Approved 13 August 1990
IEEE-SA Standards Board

Abstract: All oil-immersed or dry-type, single-phase or three-phase, outdoor or indoor shunt reactors rated over 500 kVA are covered. Terminology and general requirements are stated, and the basis for rating shunt reactors is set forth. Routine, design, and other tests are described, and methods for performing them are given. Losses and impedance, temperature rise, dielectric tests, and insulation levels are covered. Construction requirements for oil-immersed reactors and construction and installation requirements for dry-type reactors are presented.
Keywords: Dielectric test, dry-type shunt reactors, oil-immersed shunt reactor

The Institute of Electrical and Electronics Engineers, Inc.
345 East 47th Street, New York, NY 10017-2394, USA

Copyright © 1991 by the Institute of Electrical and Electronics Engineers, Inc.
All rights reserved. Published 1991. Printed in the United States of America.

IEEE is a registered trademark in the U.S. Patent & Trademark Office, owned by the Institute of Electrical and Electronics Engineers, Incorporated.

ISBN 1-55937-100-5

Library of Congree Catalog No 91-055205

No part of this publication may be reproduced in any form, in an electronic retrieval system or otherwise, without the prior written permission of the publisher.

Copyright The Institute of Electrical and Electronics Engineers, Inc.
Provided by IHS under license with IEEE
No reproduction or networking permitted without license from IHS
Not for Resale

IEEE Standards documents are developed within the Technical Committees of the IEEE Societies and the Standards Coordinating Committees of the IEEE Standards Board. Members of the committees serve voluntarily and without compensation. They are not necessarily members of the Institute. The standards developed within IEEE represent a consensus of the broad expertise on the subject within the Institute as well as those activities outside of IEEE that have expressed an interest in participating in the development of the standard.

Use of an IEEE Standard is wholly voluntary. The existence of an IEEE Standard does not imply that there are no other ways to produce, test, measure, purchase, market, or provide other goods and services related to the scope of the IEEE Standard. Furthermore, the viewpoint expressed at the time a standard is approved and issued is subject to change brought about through developments in the state of the art and comments received from users of the standard. Every IEEE Standard is subjected to review at least every five years for revision or reaffirmation. When a document is more than five years old and has not been reaffirmed, it is reasonable to conclude that its contents, although still of some value, do not wholly reflect the present state of the art. Users are cautioned to check to determine that they have the latest edition of any IEEE Standard.

Comments for revision of IEEE Standards are welcome from any interested party, regardless of membership affiliation with IEEE. Suggestions for changes in documents should be in the form of a proposed change of text, together with appropriate supporting comments.

Interpretations: Occasionally questions may arise regarding the meaning of portions of standards as they relate to specific applications. When the need for interpretations is brought to the attention of IEEE, the Institute will initiate action to prepare appropriate responses. Since IEEE Standards represent a consensus of all concerned interests, it is important to ensure that any interpretation has also received the concurrence of a balance of interests. For this reason IEEE and the members of its technical committees are not able to provide an instant response to interpretation requests except in those cases where the matter has previously received formal consideration.

Comments on standards and requests for interpretations should be addressed to:

Secretary, IEEE Standards Board
445 Hoes Lane
P.O. Box 1331
Piscataway, NJ 08855-1331
USA

IEEE Standards documents are adopted by the Institute of Electrical and Electronics Engineers without regard to whether their adoption may involve patents on articles, materials, or processes. Such adoption does not assume any liability to any patent owner, nor does it assume any obligation whatever to parties adopting the standards documents.

--`,,```,,,,````-`-`,,`,,`,`,,`---

Copyright The Institute of Electrical and Electronics Engineers, Inc.
Provided by IHS under license with IEEE
No reproduction or networking permitted without license from IHS Not for Resale

Foreword

(This Foreword is not a part of IEEE C57.21-1990, IEEE Standard Requirements, Terminology, and Test Code for Shunt Reactors Rated Over 500 kVA.)

The Standard Requirements, Terminology, and Test Code for Shunt Reactors Rated Over 500 kVA, C57.21, was first issued as a separate standard in 1971. The next revision was completed in 1981. The present revision was started in 1980 by the Standards Subcommittee, chaired by Leonard R. Smith, approved by the C57 Subcommittee in 1981, and completed within the IEEE Transformer Committee. This included work on the dielectric tests by the Task Force on Revisions of Dielectric Tests of Shunt Reactors, chaired by W. N. Kennedy, and the Task Force on Dry-Type Reactors chaired by R. F. Dudley. The work was correlated by the Working Group on Shunt Reactors, chaired by J. W. McGill, which reports to the Performance Characteristics Subcommittee.

The present standard represents the agreement of those involved in reactor design, construction testing, and usage based on the present state-of-the-art for shunt reactors.

At the time this document was published, it was under consideration for approval as an American National Standard. The Accredited Standards Committee on Transformers, Regulators, and Reactors, C57, had the following members at the time this document was sent to letter ballot:

K. Linsley, *Chair*
C. H. White, *Secretary*

American National Standards Institute ..... C. Zegers
Electric Light and Power Group ..... W. Cole
G. Gunnels
P. E. Orehek
D. Soffrin *(Alt)*
J. Sullivan
A. Velazquez
Institute of Electrical and Electronics Engineers ..... L. Savio
J. J. Bergeron
J. D. Borst
J. Davis
R. A. Veitch
National Electrical Manufacturers Association ..... G. D. Coulter
P. Dewever *(Alt)*
J. D. Douglas
P. J. Hopkinson *(Alt)*
W. C. Kendall
K. R. Linsley
L. S. McCormick
J. R. Miller
R. P. Miller, Sr.
J. J. Nay *(Alt)*
H. Robin
H. D. Smith *(Alt)*
Underwriters Laboratories, Inc. ..... W. O'Grady
R. W. Seelbach
Tennessee Valley Authority
L. R. Smith
US Department of Agriculture, *Rural Electrical Association* ..... J. Arnold, Sr.
US Department of Energy, *Western Area Power Administration* ..... D. R. Torgerson
U.S. Department of the Interior, *Bureau of Reclamation*..... F. Cook, Sr.
US Department of the Navy, *Civil Engineering Corps* ..... H. Stickley

Copyright The Institute of Electrical and Electronics Engineers, Inc.
Provided by IHS under license with IEEE
No reproduction or networking permitted without license from IHS
Not for Resale

At the time this standard was completed, the Working Group on Shunt Reactors had the following membership:

J. W. McGill, *Chair*

R. G. Barocio	J. Gerth	P. Payne
M. Beaulieu	P. Iijima	D. Perco
R. F. Dudley	W. N. Kennedy	V. Raft
J. Fleeman	R. J. Musil	M. Sharp
S. L. Foster	K. Papp	E. J. Yasuda

At the time this standard was completed, the Task Force on Revisions of Dielectric Tests of Shunt Reactors had the following membership:

W. N. Kennedy, *Chair*

R. Dudley	R. Garcia	J. McGill
J. Fleeman	J. Gerth	R. Musil
S. Foster	K. R. Highton	D. D. Perco

At the time this standard was completed, the Task Force on Dry-Type Reactors had the following membership:

R. F. Dudley, *Chair*

R. Allustiarti	P. Payne	S. Silberman
M. S. Altman	G. S. Polovic	R. J. Stojanovic
J. Erlingsson	C. G. Pounds	T. P. Traub
R. O. Jonas	R. L. Provost	R. E. Uptegraff, Jr.
S. P. Kennedy	V. Raft	J. Watson
F. Lewis	M. R. Sharp	R. J. Whearty
K. Papp		J. Wood

The final conditions for approval of this standard were met on August 13, 1990. This standard was conditionally approved by the IEEE Standards Board on May 31, 1990 with the following membership:

Marco W. Migliaro, *Chair*
James M. Daly, *Vice Chair*
Andrew G. Salem, *Secretary*

Dennis Bodson	Kenneth D. Hendrix	L. Bruce McClung
Paul L. Borrill	John W. Horch	Donald T. Michael*
Fletcher J. Buckley	Joseph L. Koepfinger*	Stig Nilsson
Allen L. Clapp	Irving Kolodny	Roy T. Oishi
Stephen R. Dillon	Michael A. Lawler	Gary S. Robinson
Donald C. Fleckenstein	Donald J. Loughry	Terrance R. Whittemore
Jay Forster*	John E. May, Jr.	Donald W. Zipse
Thomas L. Hannan	Lawrence V. McCall	

*Member Emeritus

Copyright The Institute of Electrical and Electronics Engineers, Inc.
Provided by IHS under license with IEEE
No reproduction or networking permitted without license from IHS
Not for Resale

CLAUSE PAGE

1. Scope 1

2. Terminology 1

2.1 Shunt Reactor 1
2.2 Rating of a Shunt Reactor 2
2.3 Insulation 2
2.4 Losses and Impedance 2
2.5 Construction 2
2.6 Methods of Cooling 3

3. References 3

4. General Requirements 5

4.1 Service Conditions 5
4.2 Effect of air Density on Flashover Voltage 6
4.3 Frequency 7
4.4 Effect of Altitude on Temperature Rise 7
4.5 Classes of Shunt Reactors 7
4.6 Dielectric Strength of Oil 7
4.7 Magnetic Characteristics 7

5. Basis for Rating Shunt Reactors 7

5.1 kVA Ratings 8
5.2 Terms in Which Rating is Expressed 8

6. Tests 10

6.1 Types of Tests 10

7. Losses and Impedance 12

7.1 Total Losses 12
7.2 Impedance 13

8. Temperature Rise 13

8.1 Life of Insulating Materials 13
8.2 Conditions Under Which Temperature Limits Apply 14
8.3 Limits of Temperature Rise for Continuous Ratings 14

9. Dielectric Tests and Insulation Levels 14

9.1 Dielectric Tests 14
9.2 Dielectric Tests for Line Terminals 15
9.3 Basic Lightning-Impulse Insulation Levels and Insulation Test Levels for Neutral Terminals 16

Copyright The Institute of Electrical and Electronics Engineers, Inc.
Provided by IHS under license with IEEE
No reproduction or networking permitted without license from IHS Not for Resale

CLAUSE PAGE

10. Test Code 20

10.1 General 20
10.2 Resistance Measurements 21
10.3 General Dielectric Tests 22
10.4 Losses and Impedance 33
10.5 Temperature-Rise Tests 39
10.6 Audible-Sound-Level Test 44
10.7 Vibration Tests on Oil-Immersed Shunt Reactors 51
10.8 Vibration Tests on Dry-Type Shunt Reactors 52
10.9 Magnetic Characteristic Measurements 53
10.10Seismic Performance Verification on Oil-Immersed and Dry-Type Shunt Reactors 53

11. Construction for Oil-Immersed Shunt Reactors....53

11.1 Bushings 53
11.2 Bushing-Type Current Transformers 53
11.3 Accessories 54
11.4 Terminal Markings 60
11.5 Oil Preservation 60
11.6 Oil-Preservation Systems 60
11.7 Tanks 61
11.8 Shunt Reactor Finish 62
11.9 Other Equipment Accessories 62

12. Construction and Installation of Dry-Type Shunt Reactors....63

12.1 General Description 63
12.2 Safety 63
12.3 Magnetic Clearances 63
12.4 Connections 64
12.5 Installed Sound Level 64
12.6 Concrete Foundations 65
12.7 Switching — Circuit Breakers 65
12.8 Protection Practices for Air-Core Shunt Reactors 65

Annex (Informative) Appendix to Dielectric Tests Including Information on Wave Shape Control....66

Copyright The Institute of Electrical and Electronics Engineers, Inc.
Provided by IHS under license with IEEE
No reproduction or networking permitted without license from IHS
Not for Resale

IEEE Standard Requirements, Terminology, and Test Code for Shunt Reactors Rated Over 500 kVA

1. Scope

This standard applies to all oil-immersed or dry-type, single-phase or three-phase, outdoor or indoor shunt reactors rated over 500 kVA.

This standard does not apply to other devices such as

1) Shunt reactors, 500 kVA and smaller
2) Current-limiting reactors (see ANSI C57.16-1958 [1][1])
3) Arc-suppression coils
4) Neutral-grounding devices (see IEEE Std 32-1972 [22])
5) Saturable reactors
6) Line-resonant reactors
7) Filter reactors

2. Terminology

All definitions, except as specifically covered in this standard, shall be in accordance with IEEE Std 100-1984 [23].

2.1 Shunt Reactor

2.1.1 Reactor

A device used for introducing impedance into an electric circuit, the principal element of which is inductive reactance.

[1]The numbers in brackets correspond to those of the references listed in Section 3.

--`,,```,,,,````-`-`,,`,,`,`,,`---

Copyright The Institute of Electrical and Electronics Engineers, Inc.
Provided by IHS under license with IEEE
No reproduction or networking permitted without license from IHS
Not for Resale

2.1.2 Shunt Reactor

A reactor intended for connection in shunt to an electric system for the purpose of drawing inductive current.

NOTE — The normal use for shunt reactors is to compensate for capacitive currents from transmission lines, cables, or shunt capacitors. The need for shunt reactors is most apparent at light loads.

2.2 Rating of a Shunt Reactor

2.2.1 Rated kVA

The apparent power at rated voltage for which the shunt reactor is designed.

2.2.2 Rated Current

Derived from the rated voltage and rated kVA.

2.2.3 Rated Voltage

The voltage to which operating and performance characteristics are referred.

2.3 Insulation

2.3.1 Oil-Immersed Shunt Reactor

One in which the coils and magnetic circuit are immersed in an insulating oil.

2.3.2 Dry-Type Shunt Reactor

One in which the coils are neither impregnated with an insulating fluid nor immersed in an insulating oil.

2.4 Losses and Impedance

2.4.1 Total Losses

For an oil-immersed shunt reactor, the sum of the conductor I^2R loss, magnetic circuit loss, shielding loss, and all other stray losses in the shunt reactor.

For dry-type shunt reactors, the total losses shall be taken as the sum of the conductor I^2R loss, the conductor eddy loss, and the stray loss in the windings and manufacturer supplied framework, but not including stray (eddy) losses in the user supplied support structure, surrounding structures (bus supports etc.), or mounting pad (rebar).

2.4.2 Impedance

The phasor sum of the reactance and effective resistance, expressed in ohms per phase. The impedance may be derived from the rated kVA and rated voltage.

2.5 Construction

2.5.1 Indoor Shunt Reactor

One that, because of its construction, must be protected from the weather.

Copyright The Institute of Electrical and Electronics Engineers, Inc.
Provided by IHS under license with IEEE
No reproduction or networking permitted without license from IHS
Not for Resale

2.5.2 Outdoor Shunt Reactor

One of weather-resistant construction.

2.6 Methods of Cooling

2.6.1 Dry-Type Self-Cooled Shunt Reactor (Class AA)

A dry-type shunt reactor that is cooled by the natural circulation of the cooling air.

2.6.2 Oil-Immersed Self-Cooled Shunt Reactor (Class OA)

An oil-immersed shunt reactor that is cooled by natural circulation of the cooling air over the cooling surface.

3. References

[1] ANSI C57.16-1958 (Reaf 1971), Requirements, Terminology, and Test Code for Current-Limiting Reactors.[2]

[2] ANSI C63.2-1987, American National Standard for Instrumentation— Electromagnetic Noise and Field Strength, 10 kHz to 40 GHz—Specifications.[3]

[3] ANSI C84.1-1989, Voltage Ratings for Electric Power Systems and Equipment (60 Hz).

[4] ANSI S1.4-1983, Specification for Sound Level Meters.

[5] ANSI S1.11-1986, Specifications for OctaveBand and Fractional Octave-Band Analog and Digital Filters.

[6] ANSI/ASME B1.20.1-1983, Pipe Threads, General Purpose.

[7] ANSI/CGA V-1-1987, Compressed Gas Cylinder Valve Outlet and Inlet Connections.

[8] ASTM A167-90, Specification for Stainless and Heat Resisting Chromium-Nickel Steel Plate, Sheet, and Strip.[4]

[9] ASTM Dl17-89, Guide to Test Methods and Specifications for Electrical Insulating Oils of Petroleum Origin.

[10] IEC 722 (1982), Guide to the Lightning Impulse and Switching-Impulse Testing of Power Transformers and Reactors, Appendix A, “Principles for Wave Shape Control”.[5]

[11] IEEE C57.12.80-1978 (Reaf 1986), IEEE Standard Terminology for Power and Distribution Transformers (ANSI).[6]

[12] IEEE C57.13-1978 (Reaf 1986), IEEE Standard Requirements for Instrument Transformers (ANSI).

[13] IEEE C57.98-1986, IEEE Guide for Transformer Impulse Tests (ANSI).

---

[2]This standard has been withdrawn by ANSI. Copies can be obtained from the Sales Department, American National Standards Institute, 1430 Broadway, New York, NY 10018, USA.
[3]ANSI publications are available from ANSI.
[4]ASTM publications are available from the American Society for Testing and Materials, 1916 Race Street, Philadelphia, PA 19103-1187, USA.
[5] IEC publications are available from the International Electrotechnical Commission, 3 rue de Varembé, Case Postale 131, CH 1211, Genève 20, Switzerland/Suisse. IEC publications are also available in the United States from ANSI.
[6]IEEE publications are available from the Institute of Electrical and Electronics Engineers, Service Center, 445 Hoes Lane, Piscataway, NJ 08855-1331, USA.

Copyright The Institute of Electrical and Electronics Engineers, Inc.
Provided by IHS under license with IEEE
No reproduction or networking permitted without license from IHS
Not for Resale

[14] IEEE C57.106-1977, IEEE Guide for Acceptance and Maintenance of Insulating Oil in Equipment.[7]

[15] IEEE C57.113-1988, IEEE Trial-Use Guide for Partial Discharge Measurement in Liquid-Filled Power Transformers and Shunt Reactors (ANSI).

[16] IEEE C62.1-1989, IEEE Standard for Gapped Silicon-Carbide Surge Arresters for AC Power Circuits.

[17] IEEE C62.2-1987, IEEE Guide for the Application of Gapped Silicon-Carbide Surge Arresters for Alternating Current Systems (ANSI).

[18] IEEE C62.11-1987, IEEE Standard for Metal-Oxide Surge Arresters for AC Power Circuits (ANSI).

[19] IEEE Std 1-1986, IEEE Standard General Principles for Temperature Limits in the Rating of Electric Equipment and for the Evaluation of Electrical Insulation (ANSI).

[20] IEEE Std 4-1978, IEEE Standard Techniques for High Voltage Testing (ANSI).

[21] IEEE Std 21-1976, IEEE General Requirements and Test Procedures for Outdoor Apparatus Bushings (ANSI).

[22] IEEE Std 32-1972 (Reaf 1984), IEEE Requirements, Terminology, and Test Procedures for Neutral Grounding Devices (ANSI).

[23] IEEE Std 100-1988, IEEE Standard Dictionary of Electrical and Electronics Terms-4th ed. (ANSI).

[24] IEEE Std 315-1975 (Reaf 1988), IEEE Standard Graphic Symbols for Electrical and Electronics Diagrams (CSA Z99-1975) (ANSI).

[25] IEEE Std 344-1987, IEEE Recommended Practice for Seismic Qualification of Class lE Equipment for Nuclear Power Generating Stations (ANSI).

[26] IEEE Std 454-1973 (Reaf 1979), IEEE Recommended Practice for the Detection and Measurement of Partial Discharges (Corona) During Dielectric Test (ANSI).[8]

[27] Bruckel, W. "Measurement Connection for Testing High-Voltage Reactors (in German)." *Messen und Pruefen/ Automatik*, Nov. 1976.

[28] Craig, S. and Kayser, H. "Iron-loss Measurements by AC Bridge and Calorimeter." Journal, Institution of Electrical Engineers, vol. 95, p. 2, 1948, pp. 205-216.

[29] Debourg, H., Jenkins, R. S., Slettenmark, I., Tengstrand, C.A., and Wester, C.E. "Calorimetric Loss Measurement on Alternators and Reactors." Paper 119, International Conference on Large High Tension Electric Systems (CIGRE), 20th session, 1964.

[30] Deutsch, F. "Measuring the Active Power Losses of Large Reactors." *Brown Boveri Review*, vol. 47, Apr. 1960, pp. 268-278.

[31] Erb, W. and Kraaij, D. J. "Design and Testing of Reactors for 735 kV." *Brown Boveri Review*, vol. 52, Nov./Dec. 1965, pp. 864-875.

[32] Foley, A. H. A. "Self-Balancing Transformer Core Loss Bridge." *AIEE Transactions*, vol. 76, pt, 1, 1957, pp. 567–573.

[7]This standard has been withdrawn by ANSI.
[8]This standard has been withdrawn by IEEE. Copies can be obtained from the IEEE Standards Department.

Copyright The Institute of Electrical and Electronics Engineers, Inc.
Provided by IHS under license with IEEE
No reproduction or networking permitted without license from IHS
Not for Resale

[33] Grundmark, B. “High-Voltage Shunt Reactors—Trends in Design and Testing.” Paper 12-03, International Conference on Large High Tension Electric Systems (CIGRE), 23rd session, 1970.

[34] Hague, B. *Alternating Current Bridge Methods*. London: Pitman and Sons, 1957.

[35] Heroines, R. T. and Graham, D. C. “Measurement of Self-Cooled Transformer Sound Levels in Relatively High Ambients.” *IEEE Transactions on Power Apparatus and Systems*, vol. PAS-89, Sept./Oct. 1970, pp. 1657-1662.

[36] Kusters, N. L. and Petersons, O. A. “Transformer-Ratio-Arm Bridge for High Voltage Capacitance Measurements.” *IEEE Transactions on Communications and Electronics*, vol. 69, Nov. 1963, pp. 606–611.

[37] Moore, W. J. M., Love, G., and Raftis, F. A. “Measurement of Short-Circuit Load Losses in Large Three-Phase Power Transformers, Using an Alternating Current Comparator Bridge.” *IEEE Transactions on Power Apparatus and Systems*, vol. PAS-94, no. 6, Nov/Dec. 1975, pp. 2074–2076.

[38] Moore, W. J. M. and Raftis, F. A. Measurement of Shunt Reactor Loss at High-Voltage with an Alternating Current Comparator Bridge." *IEEE Transactions on Power Apparatus and Systems*, vol. PAS-92, no. 2, Mar./Apr. 1973, pp. 662–667.

[39] Petersons, O. A. “Transformer-RatioArm Bridge for Measuring Large Capacitors Above 100 Volts.” *IEEE Transactions on Power Apparatus and Systems*, vol. PAS-87, May 1968, pp. 1354–1361.

4. General Requirements

4.1 Service Conditions

4.1.1 Usual Temperature and Altitude Service Conditions

A shunt reactor conforming to this standard shall be suitable for operation at its rated kVA and voltage, provided that

1) The temperature of the cooling air (ambient temperature) does not exceed 40 °C, and the average temperature of the cooling air for any 24 h period does not exceed 30 °C.[9]
2) The altitude does not exceed 1000 m (3300 ft).
3) The top liquid temperature of an oil-immersed shunt reactor (when operating) shall not be lower than –20 °C. Starting temperatures below –20 °C are not considered as usual service conditions.

4.1.2 Usual Voltage Conditions

Shunt reactors conforming to this standard shall be capable of operating continuously at 5% above rated voltage, and with the increased current due to this overvoltage, without exceeding the rated temperature rise.

4.1.3 Usual Installation Conditions

The installation arrangement for single-phase shunt reactors without magnetic-field shielding and connected in three-phase banks shall be as specified by those responsible for the design and application of the shunt reactors.

The spacing between reactors of a three-phase bank and between reactor banks is one determinant of the mutual reactance between adjacent phases and banks, and thus, also of the rated kVA.

[9]It is recommended that the average temperature of the cooling air be calculated by averaging 24 consecutive hourly readings. When the outdoor air is the cooling medium, the average of the maximum and minimum daily temperature may be used.

Copyright © 1991 IEEE All Rights Reserved

Copyright The Institute of Electrical and Electronics Engineers, Inc.
Provided by IHS under license with IEEE
No reproduction or networking permitted without license from IHS Not for Resale

4.1.4 Unusual Temperature and Altitude Service Conditions

A shunt reactor may be applied at higher ambient temperatures or at higher altitudes than specified in 4.1.1, but its performance may be affected. Special consideration should be given to these applications.

4.1.5 Other Unusual Service Conditions

Where unusual conditions other than those discussed in 4.1.4 exist, they should be brought to the attention of those responsible for the design and application of the shunt reactor. Examples of some of these conditions are

1) Damaging fumes or vapors, excessive or abrasive dust, explosive mixtures of dust or gases, steam, salt spray, excessive moisture or dripping water, etc.
2) Abnormal vibration, shocks, or tilting
3) Excessively high or low ambient temperatures
4) Unusual transportation or storage conditions
5) Unusual space limitations
6) Unusual duty, frequency of operation, difficulty of maintenance, poor wave form, unbalanced voltage, special insulation requirements, etc.
7) Unusual voltage conditions that may exist during periods of light system loading or unterminated or open transmission lines during which time significant voltage rises may occur (See 4.1.2 for usual voltage conditions.)
8) Unusual operating requirements that might result from the absence of surge protection or the proximity to magnetic material or structures[10]

4.2 Effect of air Density on Flashover Voltage

4.2.1 General

The effect of decreased air density due to high altitude is to decrease the flashover voltage for a given distance. See IEEE Std 4-1978 [20] for use of a correction factor with sphere gaps.

Table 1—Dielectric Strength Correction Factors for Altitudes Greater than 1000 m (3300 ft)

Altitude		Altitude Correction Factor for Dielectric Strength
(meters)	(feet)	
1000	3300	1.00
1200	4000	0.98
1500	5000	0.95
1800	6000	0.92
2100	7000	0.89
2400	8000	0.86
2700	9000	0.83
3000	10000	0.80
3600	12000	0.75
4200	14000	0.70
4500	15000	0.67

NOTE — An altitude of 4500 m is considered a maximum for reactors conforming to this standard.

[10]If a shunt reactor is not shielded magnetically, to minimize heating effects due to stray fields, consideration should be given to its location relative to other apparatus and metallic structures, including reinforced concrete.

Copyright © 1991 IEEE All Rights Reserved

Copyright The Institute of Electrical and Electronics Engineers, Inc.
Provided by IHS under license with IEEE
No reproduction or networking permitted without license from IHS Not for Resale

4.2.2 Insulation

The dielectric strength of a shunt reactor that depends in whole or in part upon air for its insulation decreases as the altitude increases. The insulation level at 1000 m (3300 ft) multiplied by the correction factor from Table 1 shall be not less than the required insulation level at the required altitude.

4.3 Frequency

Unless otherwise specified, shunt reactors shall be designed for operation at a frequency of 60 Hz.

4.4 Effect of Altitude on Temperature Rise

4.4.1 General

The effect of decreased air density due to high altitude is to increase the temperature rise of a shunt reactor that is dependent upon air for the dissipation of its heat losses.

4.4.2 Operation at Rated kVA

A shunt reactor can be operated at rated kVA at altitudes greater than 1000 m (3300 ft) without exceeding temperature limits, provided that the average temperature of the cooling air does not exceed the values of Table 2 for the respective altitudes.

4.5 Classes of Shunt Reactors

4.5.1 Dry-Type Air Cooled

Dry-type, self-cooled (class AA).

4.5.2 Oil-Immersed Air Cooled

Oil-immersed, self-cooled (class OA).

4.6 Dielectric Strength of Oil

The dielectric strength of a sample of insulating oil taken from a new shunt reactor shall not be less than the minimum kV values listed on Table 3 or 4 in IEEE C57.106-1977 [14].

4.7 Magnetic Characteristics

Shunt reactors may be identified, with regard to their magnetic characteristics, as linear, non-linear, or saturated. Most oil-immersed shunt reactors have a non-linear magnetic characteristic where the normal operation is in the unsaturated portion of the curve. (See Fig 1.)

5. Basis for Rating Shunt Reactors

(See Section 12 for other requirements which may be specified for some applications).

Copyright © 1991 IEEE All Rights Reserved
--`,,```,,,,````-`-`,,`,,`,`,,`---

Copyright The Institute of Electrical and Electronics Engineers, Inc.
Provided by IHS under license with IEEE
No reproduction or networking permitted without license from IHS Not for Resale

5.1 kVA Ratings

The kVA rating for shunt reactors is the apparent power for which the shunt reactors are designed, and is based on rated voltage. Shunt reactors shall also have the capability of continuous operation at 105% of rated voltage without exceeding the temperature-rise limits specified in Table 3.

5.2 Terms in Which Rating is Expressed

The rating of a shunt reactor shall be expressed in the following terms:

1) Rated voltage
2) Rated kVA
3) Rated current
4) Rated frequency
5) Basic lightning-impulse insulation level
6) Number of phases
7) Oil and/or winding-temperature rise
8) Method of cooling

Table 2—Maximum Allowable 24 h Average Temperature of Cooling Air for Carrying Rated kVA

Method of Cooling Apparatus	Altitude			
	1000 m (3300 ft)	2000 m (6600 ft)	3000 m (9900 ft)	4000 m (13 200 ft)
Oil-immersed, self-cooled	30 °C	28 °C	25 °C	23 °C
Dry-type, self-cooled				
55 °C rise	30 °C	27 °C	24 °C	21 °C
80 °C rise	30 °C	26 °C	22 °C	18 °C
100 °C rise	30 °C	24 °C	18 °C	12 °C
125 °C rise	30 °C	23 °C	16 °C	9 °C
150 °C rise	30 °C	22 °C	15 °C	7 °C

NOTE — Recommended calculation of average temperature is described in 4.1.1.

Copyright © 1991 IEEE All Rights Reserved

Copyright The Institute of Electrical and Electronics Engineers, Inc.
Provided by IHS under license with IEEE
No reproduction or networking permitted without license from IHS Not for Resale

Table 3—Limits of Temperature Rise for Continuously-Rated Shunt Reactors

Item	Type of Shunt Reactor	Insulation Temperature Class	Average Winding Temperature Rise by Resistance ° C	Hottest-Spot Winding Temperature Rise, °C
1	Oil-immersed	—	65	80
	Dry-type	105	55	65
		130	80	90
		155	100	115
		180	125	140
		220	150	180
2	Metallic parts in contact with, or adjacent to, the insulation shall not attain a temperature in excess of that allowed for the hottest spot of the windings adjacent to that insulation.			
3	Metallic parts other than those covered in Item 2 shall not attain excessive temperature rises.			
4	An oil-immersed shunt reactor shall have an oil-preservation system. The temperature rise of the insulating liquid in such a shunt reactor should not exceed 65 °C when measured near the top of the tank.			

NOTES:

1 — A shunt reactor with specified temperature rise shall have an insulation temperature index that has been proven by experience or testing.

2 — The insulation temperature index in Table 3 is supplied as a reference, and is based on the "Preferred Temperature Index" for insulation materials as defined in IEEE Std 1-1986 [19].

3 — The maximum hot spot temperature rise limits in Table 3 are Based on continuous operation in a 30 °C daily average ambient with a 40 °C maximum.

If the actual average annual ambient temperature is lower, or the equipment sees cyclical loading (such as the case for thyristor controlled reactors), or the service duty is short term or seasonal, then consideration can be given to increasing the allowable hottest-spot winding-temperature rise limit.

Copyright © 1991 IEEE All Rights Reserved

Copyright The Institute of Electrical and Electronics Engineers, Inc.
Provided by IHS under license with IEEE
No reproduction or networking permitted without license from IHS
Not for Resale

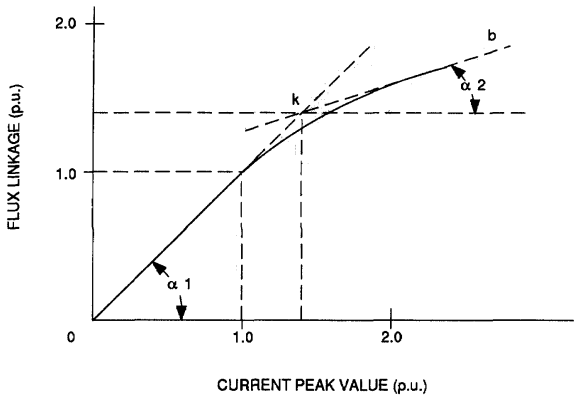

α1 = slope angle of the characteristic in nonsaturated area
α2 = slope angle of the characteristic in saturated area
k = saturation knee point, intersection of two straight lines a and b

NOTE: If the magnetic characteristic curve cannot be extended into the saturation region to determine the knee of the curve at rated frequency, then conventional coordinates, which are rms voltage and current measurements, are adequate (see 10.9).

Figure 1—Nonlinear Magnetic Characteristics for Shunt Reactors

6. Tests

Unless otherwise specified, the tests described below shall be made prior to delivery.

6.1 Types of Tests

6.1.1 Routine, Design, and Other Tests for Shunt Reactors

Types of tests for oil-immersed shunt reactors are listed in Table 4.A. Types of tests for dry-type shunt reactors are listed in Table 4.B. Definitions of these various tests are included in IEEE C57.12.80-1978 [11].

6.1.1.1

Routine tests shall be made on all shunt reactors in accordance with the requirements of Table 4.A and 4.B, as applicable.

6.1.1.2

Design tests shall be made on shunt reactors in accordance with the requirements of Tables 4.A and 4.B.

6.1.1.3

When specified (as individual tests), other tests shall be made on shunt reactors as listed in Table 4.A and 4.B.

6.1.1.4

The listing of tests shown on Table 4.A and 4.B does not necessarily indicate the sequence in which the tests shall be made. All tests are defined and shall be made in accordance with Section 10.

Copyright © 1991 IEEE All Rights Reserved

Copyright The Institute of Electrical and Electronics Engineers, Inc.
Provided by IHS under license with IEEE
No reproduction or networking permitted without license from IHS
Not for Resale

Table 4.A—Routine, Design, and Other Tests for Oil-Immersed Shunt Reactors

	Test Classification		
Tests	**Routine**	**Design**	**Other**
Resistance Measurements	X		
The dc resistance measurements shall be made on the full winding.			
Impedance Measurements	X		
The impedance measurements shall be made on the assembled shunt reactor.			
Total Loss Measurements	X		
Temperature Tests		X	
Temperature test or tests shall be made on one unit when one or more units of a given rating are produced by one manufacturer at the same time. These tests shall be omitted, however, when a record of a temperature test, made in accordance with this standard, on a duplicate or essentially duplicate unit is available.			
Insulation Power Factor Tests	X		
Applied-Voltage Tests	X		
The applied-voltage tests shall be determined by the BIL of the neutral end of the Y connected shunt reactor.			
Low-Frequency Overvoltage Tests	X		
Lightning-Impulse Tests:			
Nominal system voltage of 115 kV or above	X		
Nominal system voltage below 115 kV (only when specified)			X
Neutrals of reactors for nominal system voltage above 115 kV (only when specified)			X
Switching-Impulse Tests:			
Nominal system voltage of 345 kV or above	X		
Nominal system voltage below 345 kV (only when specified)			X
Front-of-Wave Test (only when specified)			X
Audible Sound Tests:			
Shunt reactors rated 50 mVA, three phase (16.67 mVA, single-phase) or above, or nominal system voltage of 115 kV or above	X		
Shunt reactors rated below 50 mVA, three phase (16.67 mVA, single- phase), or nominal system voltage below 115 kV (only when specified)			X
Vibration Tests:			
Shunt reactors rated 50 mVA, three phase (16.67 mVA, single-phase) or above, or nominal system voltage of 115 kV or above	X		
Shunt reactors rated below 50 mVA, three phase (16.67 mVA, single- phase), or nominal system voltage below 115 kV (only when specified)			X
Mechanical Tests	X		
Mechanical tests shall be made to verify the pressure requirements for maximum operating pressures and full vacuum filling.			

Copyright © 1991 IEEE All Rights Reserved

Copyright The Institute of Electrical and Electronics Engineers, Inc.
Provided by IHS under license with IEEE
No reproduction or networking permitted without license from IHS Not for Resale

Table 4.B—Routine, Design, and Other Tests for Dry-Type Shunt Reactors

	Test Classification		
Tests	**Routine**	**Design**	**Other**
Resistance Measurements	X		
The dc resistance measurements shall be made on the full winding.			
Impedance Measurements	X		
The impedance measurements shall be made on the full winding.			
Total Loss Measurements	X		
When specified, a total loss test may be performed on one unit of an order of identical units to measure total losses at rated voltage or at maximum voltage levels attainable with laboratory facilities.			
Temperature Tests		X	
Temperature test or tests shall be made on one unit when one or more units of a given rating are produced by one manufacturer at the same time. These tests shall be omitted, however, when a record of a temperature test, made in accordance with this standard, on a duplicate or essentially duplicate unit is available.			
Applied-Voltage Tests			X
The applied-voltage tests shall be made only on support insulators when specified.			
Turn-to-Turn Test	X		
This test is performed for nominal system voltages of 34.5 kV and below.			
Lightning-Impulse Tests:			
Nominal system voltage greater than 34.5 kV	X		
Nominal system voltage at or below 34.5 kV (only when specified)			X
Switching-Impulse Tests			X
Switching surge tests shall be made on shunt reactors rated 115 kV or above (only when specified).			
Audible-Sound Tests			X
(Only when specified)			
Vibration Tests			X

7. Losses and Impedance

7.1 Total Losses

7.1.1

The total losses of a shunt reactor shall be determined at rated voltage and rated frequency. If available test power is insufficient for testing at rated voltage, then the manufacturer must demonstrate to the user that reduced-voltage testing produces sufficiently accurate results when extrapolated to the rated voltage level. The manufacturer shall notify the user of reduced-voltage testing during the proposal stages.

Copyright © 1991 IEEE All Rights Reserved

Copyright The Institute of Electrical and Electronics Engineers, Inc.
Provided by IHS under license with IEEE
No reproduction or networking permitted without license from IHS
Not for Resale

7.1.2

The total losses of one shunt reactor, demonstrated by tests and corrected to the rated current base, shall not exceed the specified losses by more than 6%. On multiple-unit orders, the average value shall be used for guarantee purposes, unless otherwise specified by the user. In this case, the average total losses shall be equal to or less than the specified loss.

7.1.3

In the application of dry-type shunt reactors, due to the presence of an external magnetic field, there will be losses in any adjacent metallic structures. The magnitude of these losses is a function of the proximity, type of material, and geometric considerations.

7.2 Impedance

7.2.1

The tolerance for shunt reactor impedance at rated voltage shall be within ± 5% of the specified value.

NOTE — In the case of non-linear shunt reactors, for conditions above rated voltage, it may be necessary to define impedance characteristics to prevent resonant overvoltages. Such characteristics should be specified by the user.

7.2.2

In the case of a three-phase shunt reactor or a bank made of three single-phase shunt reactors, the maximum deviation of impedance in any one phase shall be within ± 2% of the average impedance of the three phases.[11]

7.2.3

When specified, the zero-sequence impedance of oil-immersed iron-core shunt reactors shall be determined at rated frequency as measured between the line terminals connected together and its neutral terminal. It is expressed in ohms per phase. For three-phase shunt reactors, the zero-sequence impedance is three times the impedance measured as indicated. The applied voltage should not exceed one-third of rated line-to-neutral voltage, nor should the neutral current exceed the rated phase current.

8. Temperature Rise

8.1 Life of Insulating Materials

The life of insulating materials commonly used in shunt reactors depends largely upon the temperatures to which they are subjected and the duration of such temperatures.

Since the actual temperature is the sum of the ambient temperature and the winding-temperature rise, it is apparent that the ambient temperature very largely influences the life of insulating materials used in shunt reactors.

Other factors upon which the life of insulating materials depend are

1) Dielectric stress and associated effects

[11]For dry-type shunt reactors without magnetic-field shielding, this tolerance applies only when units are arranged in an equilateral triangle configuration and isolated from any external magnetic influences.

Copyright © 1991 IEEE All Rights Reserved

Copyright The Institute of Electrical and Electronics Engineers, Inc.
Provided by IHS under license with IEEE
No reproduction or networking permitted without license from IHS Not for Resale

2) Vibration or varying mechanical stress
3) Repeated expansions and contractions
4) Exposure to air, moisture, etc.

8.2 Conditions Under Which Temperature Limits Apply

Temperature limits shall not be exceeded when a shunt reactor is operated at 105% of the rated voltage.

8.3 Limits of Temperature Rise for Continuous Ratings

8.3.1 Limits of Observable Temperature Rise[12]

The temperature rise above the ambient temperature of shunt reactors and parts in contact with the insulation or encapsulation material, when operated at 105% of rated voltage, shall not exceed the values given in Table 3. For procedures for determining temperature rise, see 10.5.

8.3.2 Limits of Hottest-Spot Temperature Rise

Shunt reactors shall be designed so that the hottest-spot conductor temperature rise above the ambient temperature, when operated at 105% of rated voltage, will not exceed the values given in Table 3.

9. Dielectric Tests and Insulation Levels

9.1 Dielectric Tests

9.1.1 General

1) For oil-immersed shunt reactors, low-frequency tests shall consist of an applied-voltage test and a one-hour low-frequency overvoltage test. For dry-type shunt reactors, tests shall consist of an applied-voltage test, a turn-to-turn over-voltage test, or both.
2) Impulse tests, if performed, shall be made on each line terminal.
3) The impulse test on the neutral of a shunt reactor shall be made only when specified for oil-immersed units. If the insulation level of the neutral bushing is different from that of the neutral end of the winding, the impulse-test voltage shall be for whichever insulation level is lower.
4) Switching-impulse tests shall be performed in accordance with Table 4.A or Table 4.B.
5) Insulation power factor tests are only required for oil-immersed shunt reactors. Insulation power factor tests on dry-type air-core reactors would be very difficult to measure and interpret, since the insulation between the windings and ground is essentially the resistance of the support insulators.

9.1.2 Applied-Voltage Test

9.1.2.1

For a shunt reactor with reduced insulation at the neutral, the applied-voltage test shall be in accordance with Table 5.A or Table 5.B, based upon the insulation level of the neutral end.

[12]See 4.4 for the effect of altitudes on temperature rise.

Copyright © 1991 IEEE All Rights Reserved

Copyright The Institute of Electrical and Electronics Engineers, Inc.
Provided by IHS under license with IEEE
No reproduction or networking permitted without license from IHS Not for Resale

9.1.3 Overvoltage Tests

9.1.3.1 Low-Frequency Overvoltage Test for Oil-Immersed Shunt Reactors

1) The low-frequency overvoltage test for shunt reactors shall consist of a one-hour low-frequency test from Table 5.A, column 5. This voltage shall be applied across the winding with the neutral solidly grounded. Partial discharge measurements shall be made during the one-hour test.
2) Three single-phase one-hour tests may be substituted for a three-phase test. Care should be taken to avoid overheating three-leg reactors or reactors without a magnetic-return path during single-phase overvoltage tests. Note that, under these conditions, it is generally impractical to verify internal phase-to-phase insulation with-stand strength during a three-phase test. It is therefore recommended that the manufacturer shall demonstrate the adequacy of the phase-to-phase insulation structure by achieving a minimum of 1.5 times line-to-neutral test voltage between line terminals during the one-hour test.

9.1.3.2 Overvoltage Tests for Dry-Type Shunt Reactors

1) *Applied-Voltage Test*. The applied-voltage test is a high-voltage test for the support insulators only.
2) *Turn-to-Turn Overvoltage Test*. The turn-to-turn test for dry-type shunt reactors shall be made by applying between the terminals of each winding a train of high frequency, exponentially decaying, sinusoidal voltages with a first-peak voltage at least equal to the $\sqrt{2}$ times the rms values as specified in Table 5.B, columns 3 or 4.

9.1.4 Lightning-Impulse Test

The lightning-impulse test shall include reduced full-wave, chopped-wave, and full-wave tests. Front-of-wave tests shall also be included when specified.

9.1.5 Insulation Power Factor Test

Insulation power factor is the ratio of the power dissipated in the insulation, in watts, to the product of the effective voltage and current, in voltamperes, when tested under a sinusoidal voltage and prescribed conditions. It is recorded during factory tests to permit a comparison with the power factor measured in the field.

9.2 Dielectric Tests for Line Terminals

9.2.1

The BIL chosen for each line terminal shall be such that the lightning-impulse, chopped-wave-impulse, and switching-impulse insulation levels include a suitable margin in excess of the dielectric stresses to which the terminal will be subjected in actual service. For information on surge arrester characteristics and application, refer to IEEE C62.11-1987 [18] and IEEE C62.2-1987 [17].

9.2.2

The basic impulse insulation levels and insulation test levels are given in Table 5.A for oil-immersed shunt reactors, and in Table 5.B for dry-type shunt reactors.

9.2.3

Oil-immersed and dry-type shunt reactors designed for Y connection only shall be assigned insulation levels for both line and neutral terminals.

Copyright © 1991 IEEE All Rights Reserved

Copyright The Institute of Electrical and Electronics Engineers, Inc.
Provided by IHS under license with IEEE
No reproduction or networking permitted without license from IHS Not for Resale

9.2.4

When required, as indicated in Table 4.A and 4.B, switching-impulse tests shall be performed on oil-immersed and dry-type shunt reactors. A switching-impulse test may be desired to demonstrate the switching-surge insulation strength at the line terminals of the shunt reactor. A switching-impulse test consists of applying to each phase, from the line terminal to ground, a switching-impulse voltage transient defined in Section 10. The transients shall have a minimum crest value in accordance with Tables 5.A and 5.B.

9.2.5

When specified, oil-immersed shunt reactors shall be designed to withstand the front-of-wave impulse insulation levels given in Table 5.A.

9.3 Basic Lightning-Impulse Insulation Levels and Insulation Test Levels for Neutral Terminals

9.3.1

The neutral terminal of a winding that is designed for Y connection only may have an insulation level lower than that for the line terminal(s) in accordance with the following sections.

When specified, the neutral shall be designed for a specific BIL in addition to the low-frequency test.

Copyright © 1991 IEEE All Rights Reserved

Copyright The Institute of Electrical and Electronics Engineers, Inc.
Provided by IHS under license with IEEE
No reproduction or networking permitted without license from IHS Not for Resale

Copyright The Institute of Electrical and Electronics Engineers, Inc.
Provided by IHS under license with IEEE
No reproduction or networking permitted without license from IHS

Copyright © 1991 IEEE All Rights Reserved

Not for Resale

Table 5.A—Insulation Test Levels for Oil-Immersed Shunt Reactors

Nominal System Voltage	Basic Lightning Impulse Insulation Level (BIL)	Chopped Wave Level	Switching Impulse Level (BSL)	Low-Frequency Overvoltage Test (Phase-to-Ground One Hour Level	Applied Voltage Test	Front-of-Wave	
						Impulse Levels Minimum Voltage	Specific Time to Sparkover
kV	kV Crest	kV Crest	kV Crest	kV RMS	kV RMS	kV Crest	μs
Column 1	Column 2	Column 3	Column 4	Column 5	Column 6	Column 7	Column 8
15 & below	110	120	—	13.5	34	195	0.5
25	150	165	—	23	50	260	0.5
34.5	200	220	—	30	70	345	0.5
45	250	275	—	40	95	435	0.5
69	250	275	—	65	95	435	0.5
	350	385	—	65	140	580	0.58
115	350	385	280	105	140	—	—
	450	495	375	105	185	—	—
	550	605	460	105	230		
138	450	495	375	125	185		
	550	605	460	125	230	—	—
	650	715	540	125	275		
161	550	605	460	145	230		
	650	715	540	145	275	—	—
	750	825	620	145	325		
230	650	715	540	210	275		
	750	825	620	210	325		
	825	905	685	210	360	—	—
	900	990	745	210	395		
345	900	990	745	315	395		

Nominal System Voltage	Basic Lightning Impulse Insulation Level (BIL)	Chopped Wave Level	Switching Impulse Level (BSL)	Low-Frequency Overvoltage Test (Phase-to-Ground One Hour Level	Applied Voltage Test	Front-of-Wave Impulse Levels Minimum Voltage	Front-of-Wave Specific Time to Sparkover
kV	kV Crest	kV Crest	kV Crest	kV RMS	kV RMS	kV Crest	μs
Column 1	Column 2	Column 3	Column 4	Column 5	Column 6	Column 7	Column 8
	1050	1155	870	315	460	—	—
	1175	1290	975	315	520		
500	1300	1430	1080	475			
	1425	1570	1180	475			
	1550	1705	1290	475	—	—	—
	1675	1845	1390	475			
765	1800	1980	1500	690			
	1925	2120	1600	690	—	—	—
	2050	2255	1700	690			

Reprinted from IEEE C57.12.00-1987 , IEEE Standard General Requirements for Liquid Immersed Distibution, Power, and Regulating Transformers (ANSI).

NOTES:

1 — Y connected shunt reactors for operation with neutral solidly grounded or grounded through an impedance may have reduced insulation at the neutral as specified in 9.2.

2 — Voltages in Column 5 are 1.5 times the maximum system to ground voltage.

Copyright © 1991 IEEE All Rights Reserved

Copyright The Institute of Electrical and Electronics Engineers, Inc.
Provided by IHS under license with IEEE
No reproduction or networking permitted without license from IHS
Not for Resale

Table 5.B—Insulation Test Levels for Dry-Type Shunt Reactors

Nominal System Voltage	Low Frequency Test	Turn-to-Turn		BIL and Full-Wave	Chopped Wave	Minimum Time to Flashover	Switching Surge
		Indoor	Outdoor				
kV	kV rms	kV rms	kV rms	kV Crest	kV Crest	μs	kV Crest
Column 1	Column 2	Column 3	Column 4	Column 5	Column 6	Column 7	Column 8
1.2	10	10	13	45	50	1.25	—
2.5	19	19	25	60	66	1.5	—
5.0	26	26	35	75	83	1.6	—
8.7	36	36	48	95	105	1.8	—
15.0	50	50	67	110	120	2	—
25.0	70	70	93	150	165	3	—
34.5	95	95	127	200	220	3	—
46	120	—	—	250	275	3	—
69	175	—	—	350	385	3	—
115	280	—	—	550	605	3	460

NOTES:

1 — The nominal system-voltage values given above are used merely as reference numbers and do not necessarily imply a relation to operating voltages.

2 — The low-frequency test on dry-type shunt reactors is essentially a high-voltage test on the insulators.

3 — For system voltages greater than 34.5 kV, the turn-to-turn test is not applicable, and a full-wave impulse test is to be performed as a routine test.

9.3.2

Oil-immersed shunt reactors designed for Y connection only, with the neutral brought out and solidly grounded directly or through a current transformer, shall have an insulation level at the neutral not less than 110 kV BIL.

9.3.3

The insulation level of the neutral end of the winding may differ from the insulation level of the neutral bushing for which provision is made in the shunt reactor tank. In this case, the dielectric tests on the neutral shall be determined by the insulation level of the neutral end of the winding, or the insulation level of the neutral bushing, whichever is lower. Neutral BIL shall not, in any case, be lower than 110 kV.

The windings of single-phase or three-phase shunt reactors designed for Y operation shall be capable of withstanding the applied-voltage test corresponding to the insulation test level of the line end for those cases where the neutral is insulated to withstand the low-frequency test voltage assigned to the line terminal(s). The windings (or insulators, in the case of dry-type shunt reactors) shall also be capable of withstanding a low-frequency overvoltage test at a voltage in accordance with the low-frequency test values, specified in Table 5.A or 5.B, for the nominal system voltage of the line end. The line end shall be capable of withstanding full-wave, chopped-wave, and, when specified, front-of-wave impulse tests corresponding to its nominal system voltage.

Copyright © 1991 IEEE All Rights Reserved

Copyright The Institute of Electrical and Electronics Engineers, Inc.
Provided by IHS under license with IEEE
No reproduction or networking permitted without license from IHS Not for Resale

10. Test Code

10.1 General

This section prescribes methods for performing tests specified in Section 6. The test methods covered herein are as follows:

1) Resistance measurements (see 10.2)
2) Dielectric tests and insulation power factor tests (see 10.3)
3) Losses and impedance (see 10.4)
4) Temperature-rise tests (see 10.5)
5) Audible-sound-level tests (see 10.6)
6) Vibration tests (see 10.7 and 10.8)
7) Magnetic characteristics measurements (see 10.9)
8) Seismic performance verification on oil-immersed and dry-type shunt reactors (see 10.10)

The order shown above does not necessarily indicate the sequence in which the tests shall be made.

In this standard, an effort is made to use a uniform set of symbols without sacrificing simplicity or clarity. The main symbols shall be as follows:

Symbol	Quantity
E	Voltage
I	Current
P	Active Power (in-phase component)
Q	Reactive power (quadrature component)
M	Impedance, mutual
Z	Impedance, self
R	Resistance
X	Reactance
T	Temperature, as indicated in °C
t	Time
ø	Impedance angle, degrees
F, *C*	Factor, as indicated
K, *k*	Ratio or Factor, as indicated
h	Hours

NOTE — Subscripts and other symbols used shall be as locally identified.

Copyright © 1991 IEEE All Rights Reserved

Copyright The Institute of Electrical and Electronics Engineers, Inc.
Provided by IHS under license with IEEE
No reproduction or networking permitted without license from IHS
Not for Resale

10.2 Resistance Measurements

10.2.1 General

Resistance measurements are of fundamental importance for two puposes:

1) The calculation of the conductor I^2R loss
2) The calculation of winding temperatures at the end of a temperature-rise test

10.2.2 Determination of Cold Temperature

The cold temperature of the winding shall be determined as accurately as possible when measuring the cold resistance.

10.2.2.1 Oil-Immersed Shunt Reactors

Cold resistance measurements shall not be taken on a shunt reactor when it is located in a room in which the temperature is fluctuating rapidly.

The temperature of the windings shall be assumed to be the same as the average temperature of the oil, provided

1) The windings have been under oil with no excitation and no current in the windings from 3 h to 8 h (depending upon the size of the shunt reactor) before the cold resistance is measured.
2) The temperature of the oil has stabilized, and the difference between top and bottom temperature does not exceed 5 °C.

10.2.2.2 Dry-Type Shunt Reactors

Cold resistance measurement shall not be taken in less than 4 h after the shunt reactors have been moved from one location to another, where the ambient temperatures differ by more than 5 °C but less than 10 °C. Measurements should not be taken in less than 8 h if the temperature difference is more than 10 °C.

10.2.3 Oil-Immersed Shunt Reactor Windings out of Insulating Liquid

The temperature of the windings shall be recorded as the average of several thermometers or thermocouples inserted between the coils, with care used to see that their measuring points are, as nearly as possible, in actual contact with the winding conductors. It should not be assumed that the windings are at the same temperature as the surrounding air.

10.2.4 Conversion of Resistance Measurements

Cold winding-resistance measurements are normally converted to a standard reference temperature equal to the rated average winding-temperature rise plus 20 °C. In addition, it may be necessary to convert the resistance measurements to the temperature at which the impedance and loss measurements were made. The conversions are accomplished by the following formula:

$$R_s = R_m\left(\frac{T_s + T_k}{T_m + T_k}\right) \quad \text{(Eq 1)}$$

where

R_s = resistance at desired temperature T_s
R_m = measured resistance
T_s = desired reference temperature
T_m = temperature at which resistance was measured
T_k = 234.5 (copper), 225 (aluminum)

Copyright © 1991 IEEE All Rights Reserved

Copyright The Institute of Electrical and Electronics Engineers, Inc.
Provided by IHS under license with IEEE
No reproduction or networking permitted without license from IHS Not for Resale

NOTE — The manufacturer shall use the appropriate value of T_k for the specified conductor material used and shall advise the user accordingly.

10.2.5 Methods for Measuring Resistance

Bridge or drop-of-potential methods may be used for measuring direct-current resistance.

When drop-of-potential methods are used, the measuring equipment shall have a very high degree of accuracy.

The direct-current resistance of the winding shall be measured as accurately as possible. The following precautions shall be observed:

1) When measuring the cold resistance, preparatory to making a temperature-rise test, the time required for the readings to become constant should be noted. The period thereby determined should be allowed to elapse before taking the first reading at the termination of the temperature-rise test.
2) Current used when making direct-current resistance measurements shall not exceed 15% of the rated current. Larger values may cause inaccuracy by heating the winding, and thereby changing its temperature and resistance.
3) Measurements shall not be taken until after steady-state values have been reached.
4) If the drop-of-potential method for measuring direct-current resistance is used (see Fig 2), the following additional precautions should also be taken:
   a) Greater accuracy may be obtained by the use of potentiometers.
   b) Not less than four pairs of readings for current and voltage shall be taken. The average of the resistances calculated from these measurements shall be considered to be the resistance of the winding.

10.3 General Dielectric Tests

10.3.1 Dielectric Tests

10.3.1.1 Factory Dielectric Tests

The purpose of dielectric tests in the factory is to demonstrate that the shunt reactor has been designed and constructed to withstand the specified insulation levels.

10.3.1.2 Test Requirements

Test levels and other test parameters shall be as outlined in Sections 6 and 9 of this standard, or as otherwise specified.

10.3.1.3 Measurement of Test Voltages

Unless otherwise specified, the dielectric test voltages shall be measured in accordance with IEEE Std 4-1978 [20], with the following exceptions:

1) A protective resistance may be used in series with sphere gaps, on either the live or grounded sphere. Where it is unnecessary to protect the spheres from arc damage, it may be omitted.
2) The bushing-type potential divider method shall be considered a standard method for shunt reactor tests.
3) The rectified capacitor-current method shall be considered a standard method for shunt reactor tests.

Copyright © 1991 IEEE All Rights Reserved

Copyright The Institute of Electrical and Electronics Engineers, Inc.
Provided by IHS under license with IEEE
No reproduction or networking permitted without license from IHS Not for Resale

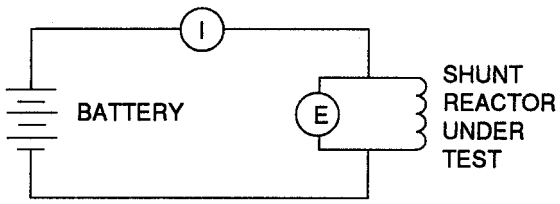

Figure 2—Connections for the Drop-of-Potential Method of Resistance Measurement

10.3.1.4 Factory Dielectric Tests and Conditions

10.3.1.4.1 Test Sequence

The final dielectric test to be performed shall be the low-frequency overvoltage test.

10.3.1.4.2 Ambient Temperature

One-hour low-frequency dielectric tests may be made at an ambient temperature under the conditions of routine test.

10.3.1.4.3 Assembly

Shunt reactors shall be assembled prior to making dielectric tests. This includes bushings and terminal compartments when necessary to verify air clearances. However, assembly of items such as radiators and cabinets that do not affect dielectric tests is not necessary. Bushings shall, unless otherwise authorized by the user, be those to be supplied with the shunt reactor.

10.3.1.4.4 Shunt Reactors for Connection to Gas-Insulated Equipment

During dielectric testing of shunt reactors designed for direct connection to gas-insulated substations, testing with the in-service bushings is preferred. Substitute air-oil bushings may be used, however, unless otherwise specified by the user. Live-part clearances and locations of the substitute bushings inside the shunt reactor must be identical, within normal manufacturing tolerances, to those of the in-service bushings. If the required internal clearances, or external air clearances, or both, cannot be achieved, suitable arrangements will be required, as determined by the manufacturer and user in advance of the design of the shunt reactor.

10.3.1.5 Tests on Bushings

When tests are required on outdoor apparatus (air-to-oil) bushings separately from the shunt reactors, the tests shall be made, in accordance with IEEE Std 21-1976 [21], by the bushing manufacturer.

Details of separate testing of bushings for use on shunt reactors connected to gas-insulated equipment shall be agreed upon by the manufacturer and user prior to the design of the shunt reactor.

10.3.2 Applied-Voltage Tests

10.3.2.1 Duration, Frequency, and Connections

A normal power frequency shall be used. The duration of the test shall be 1 min.

Copyright © 1991 IEEE All Rights Reserved

Copyright The Institute of Electrical and Electronics Engineers, Inc.
Provided by IHS under license with IEEE
No reproduction or networking permitted without license from IHS Not for Resale

All terminals of the winding(s) under test shall be joined together and connected to the line terminal of the power source.

All other terminals, the tank, and the core shall be connected to ground and to the other terminal of the power source.

10.3.2.2 Protective Gap

A protective gap set at a voltage 10% or more in excess of the specified test voltage may be connected during the applied-voltage test.

10.3.2.3 Application of Test Voltage

The voltage should be started at one-quarter or less of the full value, and be brought up gradually to full value in not more than 15 s. After being held for the time specified, it should be reduced gradually (in not more than 5 s) to one-quarter or less of the maximum value, and the circuit should be opened.

10.3.2.4 Failure Detection

Careful attention should be maintained for evidence of possible failure, which could include such items as a breakdown of test voltage, an audible sound such as a thump, or a sudden increase in test-circuit current. Any such indication should be carefully investigated by observation, by repeating the test, or by other tests to determine if a failure has occurred.

10.3.3 Overvoltage Tests

10.3.3.1 One-Hour Low-Frequency Overvoltage Test For Oil-Immersed Shunt Reactors

10.3.3.1.1 Test Procedure

The voltage shall be raised to the one-hour level, as shown in Table 5.A or 5.B, and held for 60 min. During this period, partial discharge measurements shall be recorded continuously or at 5 min intervals, in accordance with Section 10.3.4. Single-phase shunt reactors shall be excited from a single-phase source. Three-phase shunt reactors can be excited from three-phase source, or three individual one-hour tests can be applied from phase-to-neutral.

10.3.3.1.2 Frequency

The test frequency shall be increased, relative to operating frequency, as required to avoid core saturation or injurious heating of the metallic parts of the shunt reactor.

10.3.3.1.3 Failure Detection

Failure may be indicated by the sudden rise in partial discharges, an indication of smoke and bubbles rising in the oil, an audible sound such as a thump, or a sudden increase in test current. Any such indication shall be carefully investigated by observation, by repeating the test, or by other tests to determine if a failure has occurred.

In terms of interpretation of partial discharge measurements, the results shall be considered acceptable, and no further discharge tests required, if

1) The magnitude of the partial discharge (PD) level does not exceed 200 μV.
2) The increase in PD levels during the 60-min period does not exceed 30 μV.
3) The PD levels during the 60-min period do not exhibit any steadily rising trend, and there is no sudden, sustained increase in levels during the last 20 min of the tests.

Copyright © 1991 IEEE All Rights Reserved

--`,,```,,,,````-`-`,,`,,`,`,,`---

Copyright The Institute of Electrical and Electronics Engineers, Inc.
Provided by IHS under license with IEEE
No reproduction or networking permitted without license from IHS Not for Resale

Judgement should be used on the 5 minute readings so that momentary excursions of the PD level caused by cranes or other ambient sources are not recorded. Also, the test may be extended until an uninterrupted, full 60 min period with acceptable performance, as defined above, has been obtained.

As long as no breakdown occurs, and unless very high partial discharges are sustained for a long time, the test is regarded as nondestructive. A failure to meet the partial discharge acceptance criterion shall require consultation between user and manufacturer about further investigations.

10.3.3.2 Turn-to-Turn Overvoltage Test for Dry-Type Shunt Reactors

The turn-to-turn test is performed by repeatedly charging a capacitor and discharging it, through sphere gaps, into the reactor windings. The type of overvoltage that the reactor is subjected to is more representative of switching overvoltage, with an exponentially decaying sinusoidal waveshape. The test duration is to be 1 min, and the initial crest value of each discharge is to be $\sqrt{2}$ the rms value as specified in Table 5.B. The ringing frequency is a function of the coil inductance and charging capacitor, and is typically in the order of 100 kHz. The test shall consist of not less than 7200 overvoltages of the required magnitude.

Primary verification of winding insulation integrity should be based on oscillographic methods. A surge oscilloscope and camera are used to record the last discharge superimposed on a reduced-voltage discharge. A change in period or rate of envelope decay, between the reduced and full waves, would indicate a change in coil impedance and thus an inter-turn failure.

Secondary verification of insulation integrity is made by observation. A failure can be detected either by noise, or by smoke or spark discharge in the reactor windings.

Figures 3.A and 3.B show the schematic of the test circuit and representative oscillograms of applied test voltage. The use of oscillograms for failure detection is based on change in ringing frequency and a change in rate of envelope decay (damping).

10.3.4 Partial Discharge Measurements

Partial discharge testing is normally not applicable to dry-type shunt reactors, but is always required for oil-immersed units.

10.3.4.1 Internal Partial Discharge

Apparent internal partial discharges shall be determined in terms of either the radio influence voltage (RIV), or apparent charge (picocoulombs) generated and measured at the line terminals under test.

10.3.4.2 RIV Measurements

10.3.4.2.1 Instrumentation

A radio-noise and field-strength meter conforming to ANSI C63.2-1987 [2], shall be used to measure the RIV generated by an internal partial discharge. The measurement shall be on a quasi-peak basis at a nominal frequency of 1 MHz, although any frequency from 0.85–1.15 MHz may be used to discriminate against local radio station signal interference. The radio-noise meter shall be coupled to the line terminal(s) or the winding under test through the capacitance tap of the bushing(s). A suitable device shall be used to compensate for the capacitance dividing effect, produced by the bushing tap-to-ground capacitance, plus that of all elements between the bushing tap and the meter (coaxial cables, adapters, etc.). This device shall be tuned so as to minimize the dividing effect of the capacitances, and to convey the RIV signal to the radio-noise meter with a minimum of attenuation. External shielding may be used to avoid air corona that may occur at the bushing terminals or grounded projections. Radio-frequency chokes or tuned filters may be used to isolate the shunt reactor under test and the RIV measuring circuit from the remainder of the test circuit, including its energy source.

Copyright © 1991 IEEE All Rights Reserved

Copyright The Institute of Electrical and Electronics Engineers, Inc.
Provided by IHS under license with IEEE
No reproduction or networking permitted without license from IHS Not for Resale

10.3.4.2.2 Calibration

The test-circuit components connected to the winding under test may attenuate the generated RIV level and add to the measured RIV background level. It is therefore necessary to determine the relationship between the RIV at the terminal of the winding under test and the RIV reading of the radio-noise meter, when connected at its normal location in the test circuit. The steps in establishing this calibration ratio are

1) Apply a signal to the terminal under test at the guaranteed level of micro-volts at the measuring frequency.
2) Measure the voltage at the terminal under test with the radio-noise meter connected directly to the terminal.
3) With the same radio-noise meter, measure the voltage provided by the test circuit at the location where the radio-noise meter will be connected during the partial discharge test on the shunt reactor. A secondary radio-noise meter may be used for this measurement, provided its relationship to the first has been established at the measuring frequency.
4) The ratio of the calibration signal voltage measured at the shunt reactor terminal to that measured at the normal meter location in the test circuit shall be used as a multiplier on the RIV at the terminal of the winding under test.
5) It shall be established that this calibration ratio remains valid over the RIV range of interest.

10.3.4.3 Apparent Charge Measurements

Apparent charge measurements normally provide several advantages, including less attenuation of signal. General principles are covered in IEEE Std 454-1973 [26]. Measuring circuits and detailed test procedures are described in IEEE C57.113-1988 [15]. Requirements for test limits are currently being developed within the IEEE Transformers Committee. Where agreed to by both the user and the manufacturer, apparent charge measurements may be used in lieu of, or in conjunction with, RIV-type measurements.

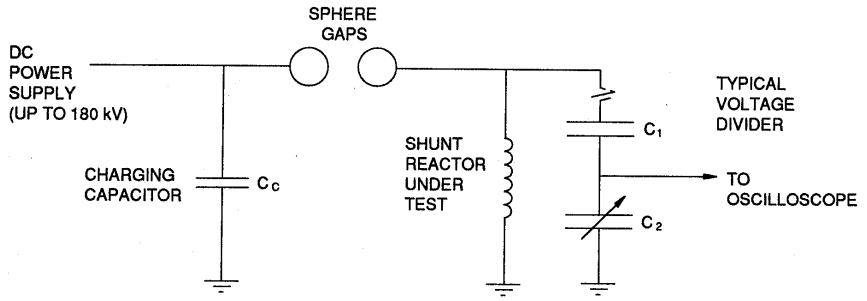

Figure 3.ATurn-to-Turn Test Circuit

Copyright © 1991 IEEE All Rights Reserved

Copyright The Institute of Electrical and Electronics Engineers, Inc.
Provided by IHS under license with IEEE
No reproduction or networking permitted without license from IHS
Not for Resale

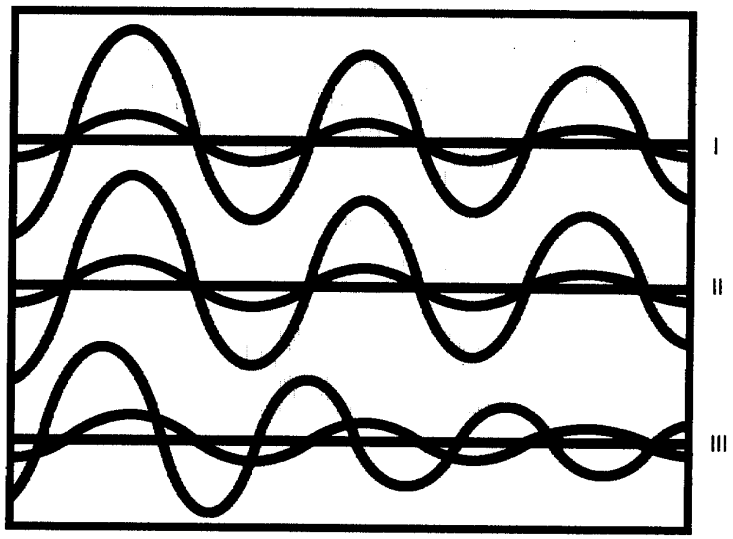

I, II : Oscillograms showing reactors which passed the turn-to-turn test

III : Oscillogram showing a reactor of the same rating as those of oscillograms I and II, but having a turn-to-turn fault

Figure 3.B—Sample Oscillograms

10.3.5 Impulse Test Procedures

Lightning-impulse tests are required as a routine test for oil-immersed shunt reactors with a nominal system voltage of 115 kV and above, and for dry-type shunt reactors with nominal system voltages greater than 34.5 kV. The tests shall consist of, and be applied in, the following order: one reduced full-wave, two chopped-waves, and one full-wave. The time interval between application of the last chopped-wave and the final full-wave should be minimized to avoid recovery of dielectric strength if a failure were to occur prior to the final full-wave. Oil-immersed shunt reactors below 115 kV and dry-type shunt reactors 34.5 kV and below shall be tested only when specified. Dry-type shunt reactors rated 34.5 kV and below shall be tested with the turn-to-turn over-voltage test.

When front-of-wave tests are also specified, impulse tests are generally applied in the following order: one reduced full-wave, two front-of-waves, two chopped-waves, and one full-wave. The order of the chopped-wave and front-of-wave tests is not mandatory. However, a reduced full-wave must be applied first; and the full-wave must be the last wave to be applied to the terminal under test. Other reduced full-waves may be applied at any time during the intervening sequences.

Refer to IEEE C57.98-1986 [13] for guide information on impulse-testing techniques, interpretation of oscillograms, and failure detection criteria.

Copyright © 1991 IEEE All Rights Reserved

Copyright The Institute of Electrical and Electronics Engineers, Inc.
Provided by IHS under license with IEEE
No reproduction or networking permitted without license from IHS Not for Resale

10.3.5.1 General

Impulse tests shall be made without excitation.

10.3.5.2 Full-Wave Test

This is a wave that rises to crest in 1.2 μs and decays to one-half of crest value in 50 μs from the virtual time zero. The crest value shall be in accordance with the assigned BIL (see Tables 5.A and 5.B), subject to a tolerance of ± 3%, and no flashover of the bushing or test gap shall occur. The tolerance on time to crest should normally be ± 30%, and the tolerance on time to one-half of crest shall normally be ± 20%. As a practical matter, however,

1) The time to crest shall not exceed 2.5 μs, except for windings of large impulse capacitance (low-voltage, high-kVA and some high-voltage, high-kVA windings). For convenience in measurement, the time to crest may be considered as 1.67 times the actual time between points on the front of the wave at 30% and 90% of the crest value.
   To demonstrate that the large capacitance of the winding causes the long front, the impulse generator series resistance may be reduced, which should cause superimposed oscillations. Only the inherent generator and lead inductances should be in the circuit.
2) The impedance of some windings may be so low that the desired time to the 50% voltage point on the tail of the wave cannot be obtained with available equipment. In such cases, shorter waves may result and are acceptable.

The virtual time zero can be determined by locating points on the front of the wave at which the voltage is, respectively, 30% and 90% of the crest value, and then drawing a straight line through these points. The intersection of this line with the time axis (zero-voltage line) is the virtual time zero.

If there are oscillations on the front of the waves, the 30% and 90% points shall be determined from the average smooth-wave front sketched in through the oscillations. The magnitude of the oscillations should preferably not exceed 10% of the applied voltage.

When there are high-frequency oscillations on the crest of the wave, the crest value shall be determined from a smooth wave sketched through the oscillations. If the period of these oscillations is 2 μs or more, the actual crest value shall be used.

10.3.5.3 Reduced Full-Wave Test

This wave is the same as a full-wave, except that the crest value shall be between 50% and 70% of the full-wave value given in Tables 5.A and 5.B.

10.3.5.4 Chopped-Wave Test

This wave is also the same as a full-wave, except that the crest value shall be at the required higher level given in Tables 5.A and 5.B, and the voltage wave shall be chopped at or after the required minimum time to sparkover. In general, the gap or other equivalent chopping device shall be located as close as possible to the terminals, and the impedance shall be limited to that of the necessary leads to the gap. It shall be permissible, however, for the manufacturer to add resistance to limit the amount of overswing to the opposite polarity to 30% of the amplitude of the chopped-wave.

10.3.5.5 Front-of-Wave Test

The wave to be used is essentially the same as a full-wave, except that it is chopped on the front of the wave at the assigned crest level and time to sparkover. The time to sparkover for front-of-wave impulse tests shall be the time from virtual zero to the time of sparkover. As with the chopped-wave test, it shall be permissible for the manufacturer to add resistance in the circuit to limit the amount of overswing to the opposite polarity to 30% of the amplitude of the front-of-wave.

Copyright © 1991 IEEE All Rights Reserved

Copyright The Institute of Electrical and Electronics Engineers, Inc.
Provided by IHS under license with IEEE
No reproduction or networking permitted without license from IHS Not for Resale

It shall have crest value and time to flashover in accordance with Table 5.A.

Two applications of the front-of-wave tests shall be used. The front-of-wave shall be made after the reduced full-wave test, and before the two chopped-wave impulse tests. Negative polarity shall be used for the front-of-wave tests.

The voltage shall be measured by a separate connection to the terminal being tested. The gap used to chop the wave on the front shall be directly connected to the terminal being tested, and may be mounted directly on the terminal. In general, front-of-wave tests shall be applied only to line terminals, and not to neutral or other terminals.

In order to provide some tolerance to practical testing, a negative tolerance of 0.1 μs to the tabulated times in Table 5.A shall be permitted. Since the test is more severe with duration, a permissible limit shall be a positive tolerance of 0.3 μs. If, in making any front-of-wave test, the negative tolerance of 0.1 μs is exceeded, the test may be considered as having been met, provided that the crest voltage attained in such a test shall have equaled or exceeded the voltage determined by the following formula

$$\text{:Voltage} = \text{crest voltage}^{*}\ 1 + \frac{(t - 0.1\,\mu\text{s}) - t_1}{A t_1}$$

*See Table 5.A

where

t = Specified time to sparkover, in μs
t_1 = actual time measured, in μs
A = 4, for 69 kV nominal system voltage 3, for 46 kV nominal system voltage

5A

When testing windings that have large capacitance, such as high kVA and low voltage, it may not be practical to obtain times to flashover down to 0.5 μs. Because of the large chopping currents associated with the large capacitance, errors are introduced into the measuring circuit. In order to avoid these difficulties, the voltages and times specified shall be considered met, provided that the tests are made with the minimum and maximum times to flashover given.

10.3.5.6 Wave Polarity

For oil-immersed shunt reactors, the test waves are normally of negative polarity to reduce the risk of erratic external flashover in the test circuit. For dry-type shunt reactors, the test waves shall be of positive polarity, unless otherwise specified.

10.3.5.7 Impulse Oscillograms

All impulses applied to a shunt reactor shall be recorded by a cathode-ray oscillograph or by a suitable digital transient recorder, unless their crest voltage is less than 40% of the full-wave level. These oscillograms shall include voltage oscillograms for all impulses, and ground-current oscillograms for all full-wave and reduced full-wave impulses. Sweep times should be in the order of 2–5 μs for front-of-wave tests; 5–10 μs for chopped-wave tests, 50–100 μs for full-wave tests, and 100–600 μs for ground-current measurements.

When reports require oscillograms, voltage and current oscillograms of the first reduced full-wave voltage, the last two chopped-waves, and the last full-wave shall represent a record of the impulse test to shunt reactors.

When shunt reactors receiving front-of-wave impulse tests require reports that include oscillograms, the oscillograms of the first reduced full-wave voltage and current, the last two front-of-waves, the last two chopped-waves, and the last full-wave of voltage and current shall represent a record of the successful application of the front-of-wave impulse test to shunt reactors.

Copyright © 1991 IEEE All Rights Reserved

Copyright The Institute of Electrical and Electronics Engineers, Inc.
Provided by IHS under license with IEEE
No reproduction or networking permitted without license from IHS Not for Resale

10.3.6 Connections for Impulse Tests

In general, the tests shall be applied to each terminal, one at a time.

10.3.6.1 Terminals Not Being Tested

One terminal of the winding under test shall be grounded through a low-resistance shunt so that ground current measurements can be made. The terminals of the winding or windings that are not being tested shall be grounded.

Exceptions: All grounds shall be direct, except as described above, or at neutral terminal that may be grounded through the same neutral grounding impedance as is to be used in service. If this impedance is unavailable, the neutral shall be directly grounded.

10.3.7 Impulse Tests on Shunt Reactor Neutrals

One reduced and two full-waves are applied directly to the neutral with an amplitude equal to the insulation level of the neutral. A wave having a front of not more than 10 μs and a tail of 40 μs to half-crest shall be used. Exception: If the inductance of the winding is so low that the desired voltage magnitude and duration to the 50% point on the tail of the wave cannot be obtained, a shorter wave tail may be used.

10.3.8 Detection of Failure During Impulse Test

Because of the nature of impulse test failures, one of the most important matters is the detection of such failures. There are a number of indications of insulation failure.

10.3.8.1 Ground-Current Oscillograms

In this method of failure detection, the impulse current in the grounded end of the winding tested is measured by means of a cathode-ray oscillograph, or by a suitable digital transient recorder, connected across a suitable shunt inserted between the normally grounded end of the winding and ground. Any differences in the wave shape between the reduced full-wave and final full-wave, detected by comparison of the two current oscillograms, may be indications of failure or deviations due to non-injurious causes. They should be fully investigated and explained by a new reduced-wave and full-wave test. Examples of probable causes of different wave shapes are operation of protective devices, core saturation, or conditions in the test circuit external to the shunt reactor.

The ground-current method of detection is not suitable for use with chopped-wave tests.

It is difficult to shield the measuring circuit completely from the influence of the high voltage of the surge generator. Some stray potentials are frequently picked up that may produce an erratic record for the first 1 or 2 μs. Such influences, if they occur at the start of the current wave (and to lesser extent at the start of the voltage wave), should be disregarded.

Where the impedance of the shunt reactor tested is high, with respect to its series capacitance, current measurements may be difficult to make because of the small impulse current. In order to reduce the initial large-capacitance current and maintain a reasonable amplitude for the remainder of the wave, a capacitor may be included in the current-measuring circuit. The capacitor should not be larger than required to achieve this result.

10.3.8.2 Other Methods of Failure Detection

1) *Voltage Oscillograms*. Any unexplained differences between the reduced full-wave and final full-wave detected by comparison of the two voltage oscillograms, or any such differences observed by comparing the chopped-waves to each other and to the full-wave up to the time of flashover, are indications of failure. Deviations may be caused by conditions in the test circuit external to the shunt reactor, and should be fully investigated and confirmed by a new reduced-wave and full-wave test.

Copyright © 1991 IEEE All Rights Reserved

Copyright The Institute of Electrical and Electronics Engineers, Inc.
Provided by IHS under license with IEEE
No reproduction or networking permitted without license from IHS Not for Resale

2) *Failure of Gap to Flashover*. In making the chopped-wave test, failure of the chopping gap, or any external part, to flashover, although the voltage oscillogram shows a chopped-wave, is a definite indication of a failure either within the shunt reactor or in the test circuit, or of a gap that is too wide.
3) *Noise*. Unusual noise within the shunt reactor, at the instant of applying the impulse, is an indication of trouble. The cause of such noise should be investigated.

10.3.9 Switching-Impulse Test Procedures

The switching-impulse test, when specified, shall consist of applying a switching-impulse wave between each high-voltage line terminal and neutral with a crest value equal to the specified test level.

10.3.9.1 Number of Tests

The switching-impulse test consists of applying to each winding, from the line terminal to ground, one reduced-voltage wave and two full-voltage waves. The reduced-voltage wave shall have a crest value of 50% to 70% of the full-voltage wave value given in Tables 5.A and 5.B. The full-voltage wave shall have a minimum crest value in accordance with Tables 5.A and 5.B, except as indicated in 10.3.9.2.2.

10.3.9.2 Switching-Impulse Waves

10.3.9.2.1 Polarity

For oil-immersed shunt reactors, the test wave is normally of negative polarity, because this reduces the risk of erratic external flashover in the test circuit.

10.3.9.2.2 Wave Shape

The switching-impulse voltage wave shall have a crest value in accordance with the assigned insulation level, subject to a tolerance of ± 3%, and shall exceed 90% of the crest value for at least 200 μs. The actual time to crest shall be greater than 100 μs, and the time to the first voltage zero on the tail of the wave shall be at least 1000 μs, except in the case where core saturation and circuit characteristics cause the tail to become shorter. In this event, the shorter tail may be used, since the duration of a switching impulse in actual service will similarly be reduced because of core saturation.

10.3.9.2.3 Time to Crest

The actual time to crest shall be defined as the time interval from the start of the impulse wave to the time when the maximum amplitude is reached.

10.3.9.2.4 Time to First Voltage Zero

The time to the first voltage zero on the tail of the wave shall be defined as the time interval from the start of the impulse wave to the time when the first voltage zero occurs on the tail of the wave.

10.3.9.2.5 Ninety-Percent Time

A smooth wave sketched through any oscillations on the switching-impulse voltage oscillogram may be used to determine the time that the applied wave is in excess of 90% of the specified crest value.

10.3.9.3 Failure Detection

A voltage oscillogram shall be taken of each impulse wave. The test is considered successful if there is no collapse of voltage indicated on the oscillograms. Note, however, that successive oscillograms may be different because of the influence of magnetic saturation on impulse duration.

Copyright © 1991 IEEE All Rights Reserved

Copyright The Institute of Electrical and Electronics Engineers, Inc.
Provided by IHS under license with IEEE
No reproduction or networking permitted without license from IHS Not for Resale

10.3.9.4 Suggested Methods of Generating Switching-Impulse Waves

An applied-voltage wave of proper magnitude and duration may be obtained by discharging an impulse generator or other capacitor bank into the winding under test. External circuit parameters may be used for controlling the wave shape.

10.3.9.5 Sequence of Tests

The switching-impulse tests shall precede the low-frequency dielectric test.

10.3.9.6 Switching-Impulse Test Connections for Three-Phase Shunt Reactors

Connections used for making switching-impulse tests are similar to those used for single-phase low-frequency overvoltage tests.

Where the design permits, each winding may be tested separately at the test voltage shown in Table 5.A with the neutral grounded.

10.3.10 Insulation Power Factor Tests

10.3.10.1 General

The insulation power factor is the ratio of the power dissipated in the insulation, in watts, to the product of the effective voltage and current, in voltamperes, when tested under a sinusoidal voltage and prescribed conditions.

The methods described herein are applicable to shunt reactors of present-day design that are immersed in oil.

10.3.10.2 Preparation for Tests

The test specimen shall have

1) All windings immersed in oil
2) All windings short-circuited
3) All bushings in place
4) The temperature of windings and oil near the reference temperature of 20 °C.

Where the temperature is other than 20 °C, the results shall be corrected to 20 °C (see 10.3.10.6).

10.3.10.3 Instrumentation

The insulation power factor may be measured by special bridge circuits or by the voltampere-watt method. The accuracy of measurement should be within ± 0.25% of the insulation power factor, and the measurement should be made at or near a frequency of 60 Hz.

10.3.10.4 Voltage to be Applied

The voltage to be applied for measuring the insulation power factor shall not exceed one-half of the low-frequency test voltage given in Table 5.A for any part of the winding, or 10 000 V, whichever is lower.

Copyright © 1991 IEEE All Rights Reserved

Copyright The Institute of Electrical and Electronics Engineers, Inc.
Provided by IHS under license with IEEE
No reproduction or networking permitted without license from IHS Not for Resale

10.3.10.5 Procedure

Insulation power factor tests shall be made from windings to ground.

10.3.10.6 Temperature Correction Factors

Temperature correction factors for the insulation power factor depend upon the insulating materials, their structure, their moisture content, etc. Typical values of the correction factor *K* are given in Table 6. They are satisfactory, for practical purposes, for use in the following equation:

$$F_{P20} = \frac{F_{PT}}{K} \quad \text{(Eq 2)}$$

where

F_{P20} =power factor corrected to 20 °C
F_{PT} =power factor measured at T °C
K =correction factor from Table 6
T =test temperature

10.4 Losses and Impedance

10.4.1 Reference Temperature for Losses and Impedance

The reference temperature for shunt reactors to which losses and impedances are corrected shall be equal to the limiting winding-temperature rise by resistance, covered in Table 3, plus 20 °C.

NOTE — In the case of loss-evaluated shunt reactors, consideration may be given to the use of a reference temperature for loss calculations to be the average winding rise, as determined by temperature-rise test, plus 20 °C.

10.4.2 Impedance Test

10.4.2.1

The impedance test is a determination of the ratio of the rated phase voltage to the current that flows with rated voltage and frequency applied to the shunt reactor terminals.

10.4.2.2

The impedance of a three-phase shunt reactor shall be measured with three-phase voltage applied to the shunt reactor terminals.

10.4.2.3

When available test power is insufficient for testing at rated voltage, the manufacturer shall demonstrate to the user that reduced-voltage testing produces sufficiently accurate results when extrapolated to the rated voltage level. The manufacturer shall notify the user of reduced-voltage testing during the proposal stages.

Copyright © 1991 IEEE All Rights Reserved

Copyright The Institute of Electrical and Electronics Engineers, Inc.
Provided by IHS under license with IEEE
No reproduction or networking permitted without license from IHS Not for Resale

Table 6—Typical Values of the Correction Factor *K*

Test Temperature *T*	Up Through 161 kV 750 kV BIL	230 kV and Up Above 750 kV BIL
10	0.80	1.01
15	0.90	0.99
20	1.00	1.00
25	1.12	1.02
30	1.25	1.05
35	1.40	1.08
40	1.55	1.12
45	1.75	1.17
50	1.95	1.23
55	2.18	1.31
60	2.42	1.43
65	2.70	—
70	3.00	—

NOTES:
1 — The insulation temperature may be considered to be that of the average oil temperature.
2 — When the insulation power factor is measured at a relatively high temperature and the corrected values are unusually high, the shunt reactor should be allowed to cool, and the measurements should be repeated at or near 20 °C.

10.4.2.4

If the currents in a three-phase shunt reactor are not balanced, the impedance current shall be taken as the average of the three values.

10.4.2.5

The zero-sequence impedance shall be measured at rated frequency between the line terminals, connected together, and its neutral terminal. It is expressed in ohms per phase and is calculated by using $3 \times E/I$, where E is the test voltage and I is the test current. This measurement shall be performed with a test current corresponding to a neutral current equal to the rated phase current, and the test voltage not above one-third of the line-to-neutral voltage.

10.4.3 Loss Measurements

10.4.3.1 General

Since shunt reactors operate at extremely low power factors, small variations in frequency, deviations from the true sine wave in applied voltage, errors in measuring components, and electromagnetic interference may introduce significant errors in loss measurements. Proper test conditions and precision components, specifically designed for low power factor measurements, are essential for an accurate determination of shunt reactor losses.

Copyright © 1991 IEEE All Rights Reserved

Copyright The Institute of Electrical and Electronics Engineers, Inc.
Provided by IHS under license with IEEE
No reproduction or networking permitted without license from IHS Not for Resale

1) Impedance bridges are frequently used to measure losses. They are generally more accurate than wattmeter measurements. While many configurations of impedance bridge networks are possible, the choice of a particular network shall be determined by the measurement problem at hand and the testing facilities available.[13]
2) If wattmeters are used to measure losses, connections to the shunt reactor will be the same as those shown in Figs 4, 5, and 6. The voltage is adjusted to the desired value at rated frequency, and simultaneous readings of amperes, volts, watts, and frequency are taken. Because of the extremely low power factor, corrections must be considered for phase angle and losses in the instruments and instrument transformers.

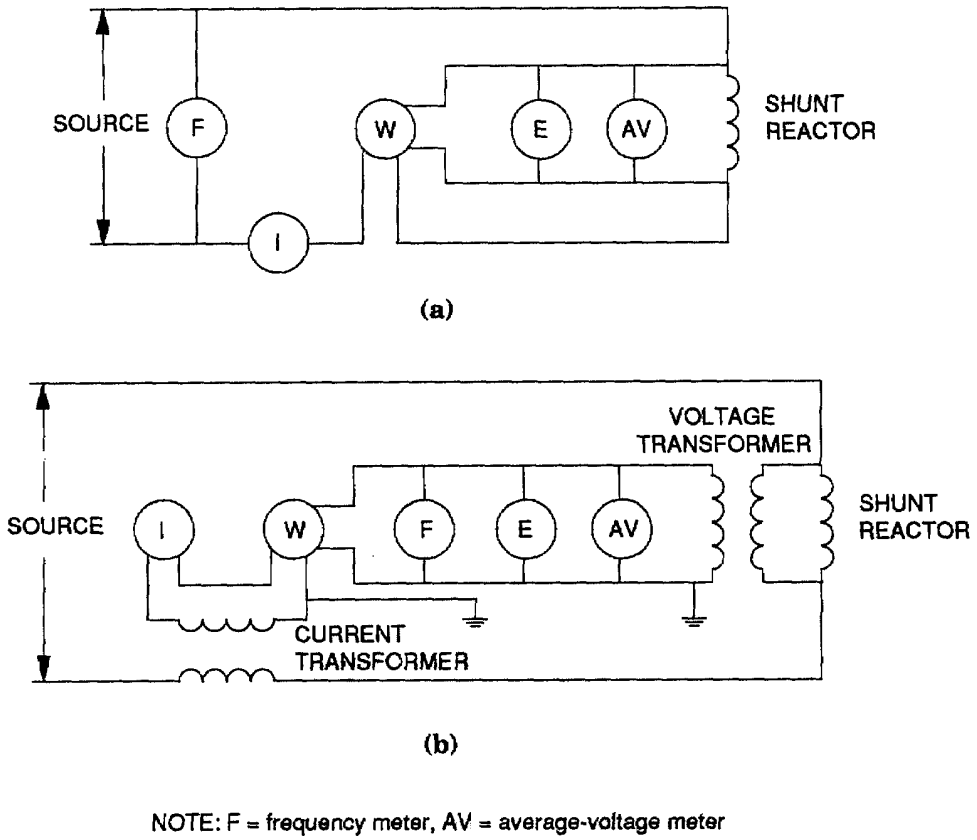

Figure 4—Connection for Loss Measurement Test of a Single-Phase Shunt Reactor (a) Without Instrument Transformers (b) With Instrument Transformers

[13]See Section 3, References [27]–[34] and [36]–[39].

Copyright © 1991 IEEE All Rights Reserved

Copyright The Institute of Electrical and Electronics Engineers, Inc.
Provided by IHS under license with IEEE
No reproduction or networking permitted without license from IHS
Not for Resale

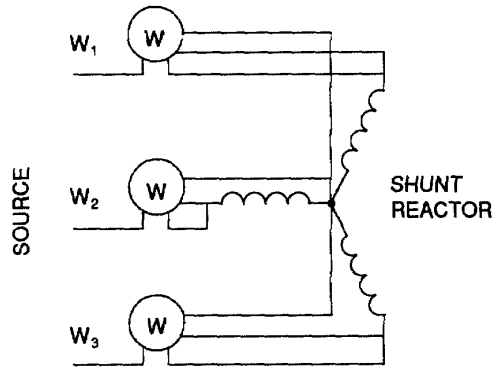

Figure 5—Three-Wattmeter Method with Shunt Reactor Neutral Available

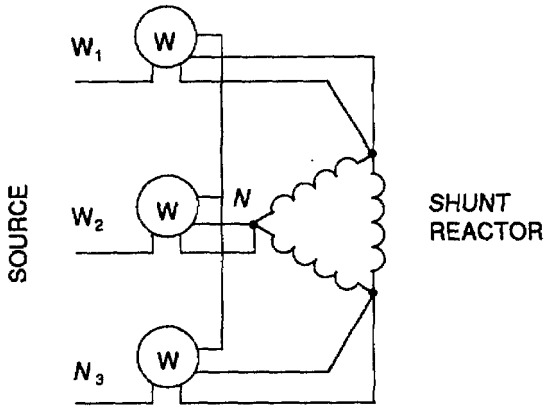

Figure 6—Three-Wattmeter Method Using Artificial Wattmeter Neutral *N*

10.4.3.2 Loss Tests on Low-Voltage Dry-Type Shunt Reactors with No Shields or Magnetic Shunts

In these shunt reactors, the losses consist of the direct-current resistance (I^2R) losses in the conductor, and the eddy losses in the conductor and any metallic framework of the clamping structure.

Since the losses in these shunt reactors are proportional to I^2, the losses shall be measured at 100% voltage, or at a reduced voltage if equivalent precision of measurement can be demonstrated to the user's satisfaction. The losses are to be corrected to rated current and a reference temperature. In some cases, the actual average winding rise, as determined by the temperature rise test plus 20 °C, may be used. This is an attempt to reflect actual site service losses and actual site average ambient temperature.

10.4.3.3 Loss Tests on Shunt Reactors with Enclosures but No Magnetic Shunts

The losses in these shunt reactors consist of the I^2R losses in the conductor, eddy losses in the conductor, and stray losses in the metallic enclosure. The losses in these shunt reactors are proportional to I^2. Therefore, the losses shall be

Copyright © 1991 IEEE All Rights Reserved

Copyright The Institute of Electrical and Electronics Engineers, Inc.
Provided by IHS under license with IEEE
No reproduction or networking permitted without license from IHS Not for Resale

measured at 100% voltage, or at a reduced voltage if better precision of measurement can be demonstrated. The eddy and stray losses in the enclosure may have a different temperature coefficient than the winding.

In this case, it may be necessary to make loss measurements at more than one temperature to verify the temperature correction equation (Eq 3). The losses are to be corrected to rated current, and a reference temperature equal to the sum of the limiting average winding-temperature rise obtained from Table 3 plus 20 °C.

10.4.3.4 Losses in Shunt Reactors with Magnetic Shunts or Gapped Iron Cores

10.4.3.4.1

The losses in these shunt reactors consist of I^2R losses in the conductor, eddy losses in the conductor, stray losses in the clamping structure and enclosure, and losses in the magnetic shunt or core.

For these shunt reactors, it is required to measure the losses at rated voltage and correct them to reference temperature, which is equal to the limiting average winding-temperature rise by resistance from Table 3 plus 20 °C.

The preferred method of measuring losses in these shunt reactors[14] is the use of a current-comparator bridge or an impedance bridge.

$$P_s = I^2_m R_m \left(\frac{T_s + T_k}{T_m + T_k}\right) + (P_m - I^2_m R_m)\left(\frac{T_m + T_h}{T_s + T_h}\right) \quad \text{(Eq 3)}$$

I_m = current in reactor when losses were measured
P_m = measured reactor losses at temperature T_m and current I_m
P_s = reactor losses at reference temperature T_s and measured current I_m
R_m = winding direct current, resistance at temperature T_m
T_h = temperature constant for enclosure (if different from T_k, to be determined by test)
T_k = 234.5 °C for copper, 225 °C for aluminum
T_m = winding temperature at which loss measurements were made
T_s = limiting winding-temperature rise plus 20 °C

10.4.3.4.2

When three-phase shunt reactors are tested, three-phase excitation shall be applied to the shunt reactor. If a single bridge is used, care shall be exercised to control the temperature, and accurately determine the temperature of the windings during the test.

[14]See footnote 13.

Copyright © 1991 IEEE All Rights Reserved

Copyright The Institute of Electrical and Electronics Engineers, Inc.
Provided by IHS under license with IEEE
No reproduction or networking permitted without license from IHS Not for Resale

10.4.3.4.3

When available three-phase power is insufficient, single-phase testing can be performed, provided the manufacturer can demonstrate to the user that measurements from single-phase tests can be converted to results valid for three-phase excitation. The manufacturer shall notify the user during the proposal stages of this condition. The losses may be segregated into I^2R conductor losses, eddy losses in conductors and clamping structure, and iron losses.[15]

10.4.3.4.4

The losses corrected to the reference temperature are as follows:

$$P_s = I_m^2 R_m \left(\frac{T_s + T_k}{T_m + T_k}\right) + (P_m - I_m^2 R_m - P_f)\left(\frac{T_m + T_k}{T_s + T_k}\right) + P_f \quad \text{(Eq 4)}$$

where

P_f = losses in magnetic shunt or core at voltage corresponding to I_m

Other terms are as defined under Eq 3.

A more realistic way of obtaining a reasonable temperature correction is by establishing the effective overall temperature coefficient for the whole reactor experimentally.

The loss in the various parts of the reactor (I^2R loss, iron loss, and additional loss) cannot be separated by measurement. It is can therefore preferable, in order to avoid corrections to reference temperature, to perform the measurement when the average temperature of the windings is practically equal to the reference temperature.

If this is impracticable, the additional loss, as well as the iron loss, shall be deemed independent of temperature.

If several units are to be tested, it is recommended that the unit on which loss measurement is carried out as a type test at approximately reference temperature shall be measured at ambient temperature also, thus establishing a temperature coefficient for total loss (assuming linear variation). Remaining units will then be measured at ambient temperature only, and their loss figure shall be corrected to reference temperature using the temperature coefficient established on the type-tested unit.

---

[15]NOTE—Since the iron losses cannot be measured separately on a shunt reactor, some other method shall be used for their determination. Calculated iron losses are often used. The iron-loss segregation can also be made by measuring the losses in the reactor at two temperatures at least 10 °C apart, and using the calculation formula below. However, since this calculation involves taking a difference between measured quantities of nearly equal magnitude, the accuracy of the final result may not be as good as when the calculated value of iron loss is used.

$$P_f = P_2\left(\frac{T_2 + T_k}{T_2 - T_1}\right) - P_1\left(\frac{T_1 + T_k}{T_2 - T_1}\right) - I_m^2 R_1\left(\frac{T_1 + T_2 + T_k}{T_1 + T_k}\right)$$

I_m = current in the reactor when losses were measured
R_1 = winding direct current resistance at temperature T_1
P_1 = measured reactor losses at temperature T_1
P_2 = measured reactor losses at temperature T_2
P_f = losses in the magnetic shunt or core at a voltage corresponding to I_m
T_1 = temperature of windings at test 1
T_2 = temperature of windings at test 2
T_k = 234.5 °C for copper, 225 °C for aluminum

Copyright © 1991 IEEE All Rights Reserved

Copyright The Institute of Electrical and Electronics Engineers, Inc.
Provided by IHS under license with IEEE
No reproduction or networking permitted without license from IHS Not for Resale

10.4.4 Impedance Tests

10.4.4.1

If the impedance of the shunt reactor remains constant, the losses measured at other than rated current may be corrected to rated current and temperature.

$$P_r = \left(\frac{I_r}{I_m}\right)^2 P_s \quad \text{(Eq 5)}$$

where

I_m = current in the reactor when losses were measured
I_r = rated current (see 2.2.2)
P_r = losses at rated current
P_s = reactor losses at reference temperature T_s and measured current I_m

10.4.4.2

If the impedance of the shunt reactor is not constant, empirical methods may be required to correct the various components of the losses to rated current and reference temperature.

10.5 Temperature-Rise Tests

10.5.1 Voltage and Frequency

The temperature test shall be made at rated frequency and 105% rated voltage (see Section 8). When the available test power does not permit making the test at 105% rated voltage, then the manufacturer shall demonstrate to the user that reduced-voltage testing produces sufficiently accurate results when extrapolated to the 105% rated voltage level. The manufacturer shall notify the user of reduced-voltage testing during the proposal stages.

10.5.2 Test Voltage for Shunt Reactors Rated 34.5 kV or Less

All shunt reactors having a rated voltage of 34.5 kV or less shall be tested at full test voltage.

10.5.3 Correction to 105% Rated Voltage

The temperature rises shall be corrected to 105% rated voltage by calculating the additional temperature rise that would result from increasing the losses from those measured at the temperature test voltage level to those associated with the 105% rated voltage level. The losses used for this extrapolation will be corrected to the ultimate, average temperature of the windings at both the test level and the 105% rated voltage level, respectively.

10.5.4 Determination of Average Measured Winding Temperature by the Hot-Resistance Method

The average measured temperature of a winding may be determined by either of the following equations:

$$T = \frac{R}{R_o}(T_k + T_o) - T_k \quad \text{(Eq 6)}$$

$$T = \frac{R - R_o}{R_o}(T_k + T_o) + T_o \quad \text{(Eq 7)}$$

where

Copyright © 1991 IEEE All Rights Reserved

--`,,```,,,,````-`-`,,`,,`,`,,`---
Copyright The Institute of Electrical and Electronics Engineers, Inc.
Provided by IHS under license with IEEE
No reproduction or networking permitted without license from IHS Not for Resale

T = temperature, °C corresponding to hot resistance R
T_o = temperature, °C corresponding to cold resistance R_o
R_o = cold resistance determined in accordance with the rules of this standard
R = hot resistance
T_k = 234.5 °C (copper)
225 °C (aluminum)

The time for the measuring current to become stable should be noted during the cold-resistance measurements in order to assure that sufficient time elapses for the induction effect of the winding to disappear before hot resistance readings are taken.

Record the elapsed time between the instant of shutdown and each hot-resistance measurement.

10.5.5 Correction of Observed Temperature Rise for Variation in Altitude

When tests are made at an altitude not exceeding 1000 m (3300 ft) above sea level, altitude corrections shall not be applied to the temperature rise.

When a shunt reactor which is tested at an altitude less than 1000 m (3300 ft) is to be operated at an altitude in excess of 1000 m (3300 ft), it shall be assumed that the observed temperature rise will increase in accordance with the following relation:

$$\text{Increase in temperature rise at altitude } A \text{ in m (ft)} = \text{Observed Rise}\left(\frac{A}{A_o} - 1\right)F \quad \text{(Eq 8)}$$

where

A_o = 1000 m (≈ 3300 ft)
F = empirical factor given in right-hand column of the following table:

Method of cooling	Empirical Factor F
Oil-immersed, self cooled (OA)	0.04
Dry-type, self-cooled (AA)	0.05

The observed rise in Eq 8 is

1) Top-oil temperature rise, or average-oil temperature rise, and winding-temperature rise over the ambient temperature for oil-immersed shunt reactors
2) Winding-temperature rise over the ambient temperature for dry-type shunt reactors

10.5.6 Temperature-Rise Tests on All Shunt Reactors

10.5.6.1

All temperature-rise tests shall be made under normal (or equivalent to normal) conditions, based on the methods of cooling.

Copyright © 1991 IEEE All Rights Reserved

Copyright The Institute of Electrical and Electronics Engineers, Inc.
Provided by IHS under license with IEEE
No reproduction or networking permitted without license from IHS Not for Resale

10.5.6.2

Shunt reactors shall be completely assembled and, if oil-immersed, shall be filled to the proper level.

10.5.6.3

If the shunt reactors are equipped with thermal indicators, bushing-type current transformers, etc., such devices shall be assembled with the shunt reactors.

10.5.6.4

The temperature-rise test shall be made in a room that is as free from drafts as practicable.

10.5.6.5

The temperature of the surrounding air, the ambient temperature, shall be determined by at least three thermocouples or thermometers spaced uniformly around the shunt reactor under test. They should be located at about one-half the height of the shunt reactor, and at a distance of 1–2 m (3–6 ft) from the shunt reactor. They should be protected from drafts and abnormal heating.

To reduce to a minimum the errors due to time lag between the temperature of the shunt reactor and the variations in the ambient temperature, the thermocouples or thermometers shall be placed in suitable containers. These containers shall have such proportions as will require not less than 2 h for the indicated temperature within the container to change 6.3 °C if suddenly placed in air that has a temperature 10 °C or less than the previous steady-state indicated temperature within the container.

10.5.6.6

When measured, the temperature rise of metal parts (other than the winding conductor) in contact with or adjacent to insulation, and the temperature rise of other metal parts, shall be determined by thermocouple or by thermometer.

Provisions shall be made to measure the surface temperature of iron or alloy parts surrounding or adjacent to the outlet leads or terminals carrying currents. Readings shall be taken at intervals, or immediately after shutdown.

The determination of the temperature rise of metal parts within the case, other than winding conductors, is a special test. This test shall be made when so specified, unless a record of this test made on a duplicate, or essentially duplicate, unit can be furnished. This test will not be made unless definitely specified, because provision for the proper placement of the thermocouples and leads must frequently be made during the design of the shunt reactor. Comparisons with other shunt reactors having metal parts of similar design and arrangement, but not necessarily having the same rating, will, in many cases, be adequate.

10.5.6.7

A thermocouple is the preferred method of measuring surface temperature. When used for this purpose, the thermocouple should, when practical, be spot welded to the surface. When this is not practical, the thermocouple should be soldered to a thin metal plate or foil approximately 25 mm (1 in) square. The plate is to be placed, and securely fastened, against the surface. In either case, the thermocouple should be thoroughly insulated thermally from the surrounding medium, and care should be exercised to prevent the solder and the spot weld from disturbing the accuracy of the thermocouple.

NOTE — The use of thermocouples can be hazardous due to parts being at high voltage. Other temperature measuring methods might have to be used.

Copyright © 1991 IEEE All Rights Reserved

Copyright The Institute of Electrical and Electronics Engineers, Inc.
Provided by IHS under license with IEEE
No reproduction or networking permitted without license from IHS Not for Resale

10.5.6.8

It is permissible to shorten the time required for the test by the use of restricted cooling, or any other suitable method. If time constants are required for the user, then restricted cooling cannot be used to shorten test time.

10.5.6.9

The temperature rise of the windings shall be determined by the resistance method, or by thermometer when so specified.

10.5.6.10

The ultimate temperature rise is considered to be reached when the temperature rise becomes constant; that is, when the temperature rise does not vary more than 2.5% or 1 °C, whichever is greater, during a consecutive 3 h period (for oil-immersed shunt reactors) or 2 h period (for dry-type shunt reactors).

10.5.7 Temperature-Rise Tests on Oil-Immersed Shunt Reactors

10.5.7.1 General

The top-oil temperature shall be measured by a thermocouple or alcohol thermometer immersed approximately 50 mm (2 in) below the top-oil surface.

The average temperature of the oil shall be determined when the average temperature method is used.

The average-oil temperature is equal to the top-oil temperature minus one-half the difference in temperature of the moving oil at the top and the bottom of the cooling means, as determined by suitable measurements.

For shunt reactors with external cooling means, this temperature difference may be closely approximated by careful determination of the temperature on the external surface of the oil inlet and oil outlet of the cooling means by the use of thermocouples.

10.5.7.2 Temperature-Rise Tests on Oil-Immersed Self-Cooled (Class OA) Shunt Reactors

The ambient temperature shall be taken as that of the surrounding air, which should be not less than 10 °C or more than 40 °C. Corrections for variation of ambient temperature within this range shall not be applied.

Temperature tests may be made with ambient temperature outside the range specified if suitable correction factors are available.

10.5.8 Temperature-Rise Tests on Oil-Immersed Shunt Reactors — Methods

10.5.8.1 Using the Top-Oil Temperature Rise

Determine the top-oil temperature rise over the ambient temperature in the following manner:

1) Apply 105% rated voltage at rated frequency to the shunt reactor.
2) Run until the top-oil temperature rise over the ambient temperature does not change more than 2.5% or 1 °C, whichever is greater, during a consecutive 3 h period.
3) Measure the ultimate top-oil temperature rise.

Determine the average temperature rise of the winding over the top-oil temperature in the following manner:

Copyright © 1991 IEEE All Rights Reserved

Copyright The Institute of Electrical and Electronics Engineers, Inc.
Provided by IHS under license with IEEE
No reproduction or networking permitted without license from IHS Not for Resale

1) Immediately after determining the top-oil temperature rise as described above, shut down and measure the winding resistance, and calculate the average winding-temperature rise over the top-oil temperature at the end of the run.
2) Correct these rises back to the instant of shutdown.

The average winding-temperature rise over the ambient temperature is the sum of the top-oil temperature rise over the ambient temperature plus the average winding-temperature rise over the top-oil temperature.

10.5.8.2 Using the Average Oil Temperature Rise

Determine the average oil temperature rise over the ambient temperature in the following manner:

1) Apply 105% rated voltage at rated frequency to the shunt reactor.
2) Run until the top-oil temperature rise over the ambient temperature does not change more than 2.5% or 1 °C, whichever is greater, during a consecutive 3 h period.
3) Measure the ultimate average oil temperature rise.

NOTE — Methods for this measurement are given in 10.5.7.

Determine the average temperature rise of the winding over the average oil temperature in the following manner:

1) Immediately after determining the average oil temperature rise as described above, shut down and measure the winding resistance and calculate the average winding-temperature rise over the average oil temperature.
2) Correct these rises back to the instant of shutdown.

The average winding-temperature rise over the ambient temperature is the sum of the average oil temperature rise over the ambient temperature plus the corrected average winding-temperature rise over the average oil temperature.

10.5.9 Temperature-Rise Tests on Dry-Type Shunt Reactors—Methods and Corrections

10.5.9.1

When the ambient air temperature is other than 30 °C, a correction shall be applied to the temperature rise of the winding by multiplying it by the correction factor *C* which is given by the ratio:

$$C = \frac{T_k + 30°C}{T_k + T_a} \quad \text{(Eq 9)}$$

where

T_k = 234.5 °C (copper)
225 °C (aluminum)
T_a = ambient air temperature, °C

When temperature-rise tests by the thermometer are required, place at least one thermometer in each coil assembly. It is important that the coil thermometers be placed in the air ducts in such a manner as to indicate the winding temperature without restricting the ventilation.

Once the temperature rise has become constant, the test voltage and current should be removed. Immediately thereafter, the coil thermometers, and any other temperature indicating devices, should be read continually in rotation until the temperature begins to fall. If any of the thermometer temperatures are higher than those observed during the run, the highest temperature should be recorded as the final thermometer temperature.

Copyright © 1991 IEEE All Rights Reserved

Copyright The Institute of Electrical and Electronics Engineers, Inc.
Provided by IHS under license with IEEE
No reproduction or networking permitted without license from IHS Not for Resale

10.5.9.2 Temperature-Rise Tests on Dry-Type Self-Cooled (Class AA) Shunt Reactors

The ambient temperature shall be taken as that of the surrounding air, which should be not less than 10 °C nor more than 40 °C.

10.5.10 Correction Back to Shutdown — Cooling Curve Method

Take a series of at least four, preferably more, readings on each winding, and record the time after shutdown for each reading.

The readings should be time spaced to x assure accurate extrapolation back to shutdown.

The overall reading time should exceed 4 rain, and may extend considerably beyond.

The first reading on each winding should be taken as quickly as possible after shutdown, but not before the measuring current has become stable. The first reading shall be taken within 4 min.

Plot the resistance time data on suitable coordinate paper, and extrapolate the curve back to the instant of shutdown.

The resistance value so obtained shall be used to calculate the average winding temperature at the instant of shutdown.

The resistance time curve obtained on one phase may be used to determine the correction back to shutdown for the other phases of the windings, etc., provided that the first reading on each of the other windings has been taken within 4 rain after shutdown.

If necessary, the temperature test may be resumed so that the first readings on any group of windings may be completed within the required 4 min.

10.6 Audible-Sound-Level Test

10.6.1 General

The audible sound for all dry-type and oil-immersed shunt reactors has one major source, which is the magnetic force caused by the reaction between the winding current and the flux density in the medium or composite medium. (This applies to all core and coil assemblies.)

This force generates audible sound. Its harmonics will be in discrete tones, whose frequencies are even multiples of the shunt reactor's excitation frequency.

The *A*-weighted measurement characteristic best relates how a remote listener hears the complex sound generated by the shunt reactor, and shall be used to determine the average sound-level performance of the shunt reactor.

For some purposes, a frequency distribution of a shunt reactor's sound is desirable; and when specified, it shall be measured in frequency bands (either octave or one-third-octave band), or as discrete frequencies.

10.6.2 Instrumentation

10.6.2.1

Sound-level measurements shall be made with instrumentation that meets ANSI S1.4-1983 [4] for type 2 meters.

Copyright © 1991 IEEE All Rights Reserved

Copyright The Institute of Electrical and Electronics Engineers, Inc.
Provided by IHS under license with IEEE
No reproduction or networking permitted without license from IHS Not for Resale

10.6.2.2

Octave or one-third-octave band frequency measurements shall be made, when specified, with instrumentation that meets ANSI S1.4-1983 [4] for type 2 meters, together with ANSI S1.11-1986 [5] for type E, class 11 performance, or their equal.

10.6.2.3

Discrete-frequency measurements shall be made when specified, or when necessary due to test conditions.[16] Instrumentation is not standardized at present. However, typical analyzer bandwidth characteristics deemed suitable are one-tenth octave; 1, 3, or 10% of the selected frequency; or 3, 10, or 50 Hz.

10.6.2.4

A suitable wind screen may be used where the air velocity due to winds, prevailing drafts, or microphone locations in the proximity of the shunt reactor cause the readings to be in error. Suitable corrections, if necessary, shall be made for readings with wind screens to ensure that only the wind noise effects are negated.

10.6.3 Test Conditions

10.6.3.1

Measurements shall be performed in an environment having an ambient sound level that is below the combined sound level of the shunt reactor and the ambient for the frequency band in which measurements are being made. This level shall be at least 5 dB, but preferably ≥10 dB below the combined sound level.

The ambient sound level shall be established by averaging measurements taken immediately preceding and immediately following the shunt reactor tests for at least four microphone locations, spaced equally around the shunt reactor. For an average ambient sound level of 5 dB or more below the combined sound level of shunt reactor and ambient, the following corrections shall be applied, according to Table 7.

Ambient sound corrections shall be governed by the average sound-level measurements with identical frequency bandwidths for the combined shunt reactor and ambient sound, and the ambient sound alone.

Where ambient conditions differ from the above and are steady, suitable corrections may be feasible. The details and method of making such ambient corrections shall be determined by those responsible for the design and application of the shunt reactor.

Where the difference is less than 5 dB, and it is only desired to know a sound level that the shunt reactor does not exceed, a correction of –1.6 dB may be used.

[16]For a discrete frequency application, see [27].

Copyright © 1991 IEEE All Rights Reserved

Copyright The Institute of Electrical and Electronics Engineers, Inc.
Provided by IHS under license with IEEE
No reproduction or networking permitted without license from IHS Not for Resale

Table 7—Correction to Sound Level

Difference between Average Sound Level of Combined Shunt Reactor and Ambient and Average Sound Level of Ambient (dB)	Correction to be Applied to Average Sound Level of Combined Shunt Reactor and Ambient to Obtain Average Sound Level of Shunt Reactor (dB)
5	1.6
6	1.3
7	1.0
8	0.8
9	0.6
10	0.4
Over 10	0.0

10.6.3.2

The shunt reactor shall be located so that no acoustically reflecting surface, other than the floor or ground, is within 3.0 m (10 ft) of the shunt reactor.

10.6.3.3

The shunt reactor shall be connected for, and energized at, rated voltage and frequency. Three-phase shunt reactors shall be energized from a three-phase source and single-phase shunt reactors from a single-phase source. When available test power is insufficient for testing at rated voltage, then the manufacturer must demonstrate to the user's satisfaction that reduced-voltage testing produces sufficiently accurate results when extrapolated to the rated voltage level. The manufacturer must notify the user of reduced-voltage testing during the proposal stages. If this cannot be demonstrated to the user, a field test can be performed.

10.6.3.4

When specified, sound-level tests shall be conducted at a specific voltage other than rated.

10.6.4 Microphone Positions

10.6.4.1

The reference-sound-producing surface of a shunt reactor is a vertical surface which follows the contour of a taut string stretched around the periphery of the shunt reactor or integral enclosure. This is to include radiators, tubes, switch compartments, terminal chambers, etc., but excludes bushings and minor extensions such as valves, oil gauges, thermometers, conduit terminal boxes, and projections at or above cover height.

In consideration of the safety and consistency of measurement, the reference-sound-producing surface near unenclosed live parts of field-assembled items, such as switches, switchgear and terminal compartments or wall-mounted bushings, SF6 air-to-oil adapter bushings, etc., shall be moved outward from the taut string contour to be consistent with safe worker clearances, as determined by the manufacturer for the system voltage of the live part terminations involved.

Copyright © 1991 IEEE All Rights Reserved

Copyright The Institute of Electrical and Electronics Engineers, Inc.
Provided by IHS under license with IEEE
No reproduction or networking permitted without license from IHS Not for Resale

10.6.4.2

For oil-immersed shunt reactors, the first microphone location shall coincide with the main drain valve (see Fig 7). Additional points shall be located at 1.0 m (3.3 ft) intervals, proceeding clockwise in a horizontal direction as viewed from above, along the reference-sound-producing surface defined in 10.6.4.1.

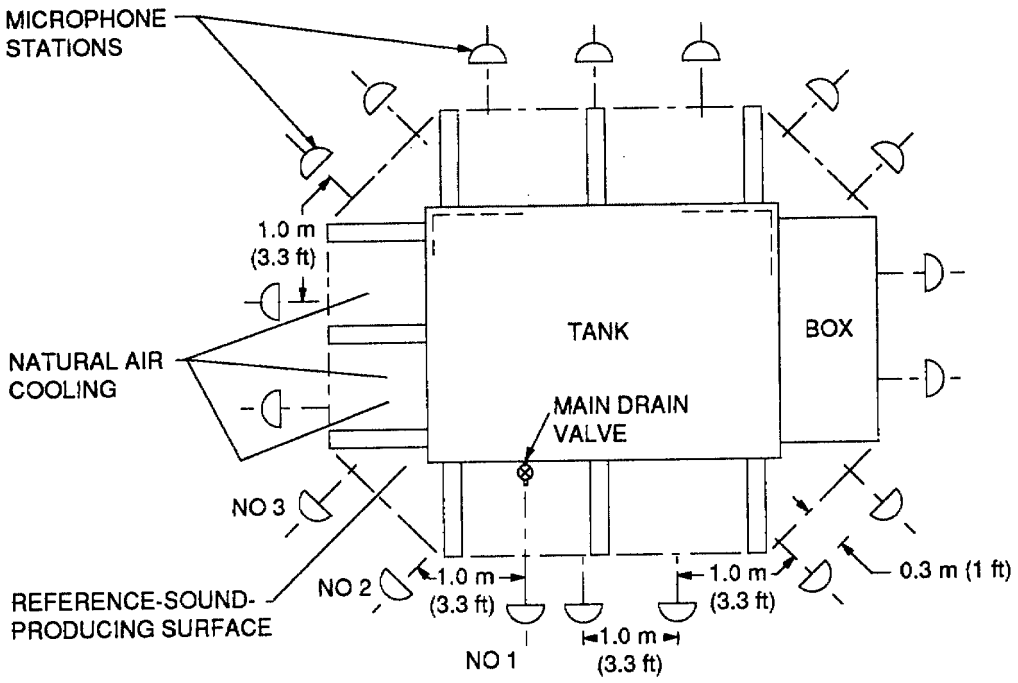

Figure 7—Microphone Locations for Audible-Sound Tests of Oil-Immersed Shunt Reactors

There shall be no fewer than four microphone location points, which may result in intervals of less than 1.0 m (3.3 ft) for small shunt reactors. The microphone shall be located on a straight line perpendicular to the reference-sound-producing surface at each microphone location point. The microphones shall be spaced 0.3 m (1 ft) from the reference-sound-producing surface.

10.6.4.3

For oil-immersed shunt reactors having an overall tank or enclosure height of less than 2.4 m (8 ft), measurements shall be made at half-height. For shunt reactors having an overall tank or enclosure height of 2.4 m (8 ft) or more, measurements shall be made at one-third and two-thirds height.

10.6.4.4

For single-phase dry-type shunt reactors less than 2.4 m (8 ft) tall, microphone stations shall be at half-height. For single-phase dry-type shunt reactors greater than 2.4 m (8 ft) tall, microphone stations shall be at one-third and two-thirds height. For two and three-coil stacked arrangements, microphone stations shall be at mid-height of each reactor. If measurements at the above heights are not possible due to bus bar layout, microphone stations shall be located at the mid-height of the base reactor. In plan view, the microphone stations for dry type shunt reactors shall be laid out clockwise, sequentially along the circumference of a circle having its center at the geometric center of the shunt reactor, and a radius equal to the reactor radius plus 3 m (10 ft). The first station will be on a radial line through the bottom terminal, or as close to it in the clockwise direction as is permitted to comply with minimum clearance distances to live parts. For the case of tall coils, two-stack coils, and three-stack coils that can only be measured at one

Copyright © 1991 IEEE All Rights Reserved

Copyright The Institute of Electrical and Electronics Engineers, Inc.
Provided by IHS under license with IEEE
No reproduction or networking permitted without license from IHS
Not for Resale

height above grade, the radius of the circle along which measurements will be taken is equal to the reactor radius plus 3 m (10 ft), or one-half of the overall reactor stack height, whichever is greater.

For side-by-side arrangements of single or stacked reactors, microphone stations are determined by the same method as for a single coil or single stack, if the stations do not overlap. If the microphone stations do overlap, measurements shall only be taken around the outermost perimeter of the resulting contour (see Fig 8).

An integrating sound-level meter can be used in place of a standard sound-level meter. The energy average sound level is recorded by traversing the reactor(s) envelope of the above defined contours at a constant rate of speed.

10.6.4.5

The magnetic field in the near vicinity of dry-type shunt reactors may be strong enough to affect the sound instrumentation adversely. The sound-level meter should be kept at a distance from the shunt reactor that will ensure that the ratio of sound pressure level to the electromagnetic noise susceptibility of the sound-level meter shall not exceed 30 dB.

10.6.4.6

When sound-level tests are made at the factory, the mounting conditions that are obtained at the final installation should be simulated as much as practicable.

10.6.4.7

If it should become expedient to measure the sound level of a single-phase dry-type shunt reactor after it has been installed as part of a three-phase bank of shunt reactors, then it will be desirable that those responsible for the design and application of the apparatus agree upon a suitable technique of making corrections for ambient sound of other phases, for reflecting surfaces, and for unavoidable alterations in the microphone locations.

10.6.5 Sound-Level Measurements

10.6.5.1

Sound levels shall be measured in conformance with 10.6.1, 10.6.3, and 10.6.4 using the sound-level-meter *A*-weighting characteristic.

10.6.5.2

The average *A*-weighted sound level is defined as the arithmetic mean of the respective *A*-weighted sound-level measurements taken at each microphone location defined in 10.6.4.

10.6.5.3

When specified, measurements shall also be taken using the sound-level-meter *C*-weighting characteristic.

10.6.5.4

If necessary due to ambient conditions, the sound level may be measured using discrete frequency components[17] (see 10.6.6.4).

[17]See footnote 16.

Copyright © 1991 IEEE All Rights Reserved

Copyright The Institute of Electrical and Electronics Engineers, Inc.
Provided by IHS under license with IEEE
No reproduction or networking permitted without license from IHS Not for Resale

10.6.5.5

The shunt reactor should be located so that no acoustically reflecting surface, other than the floor or ground, significantly effects the sound-level measurements. There should be no reflecting surfaces with a normal projected area of more than one-fourth of the square of the distance between the unit and the surface.

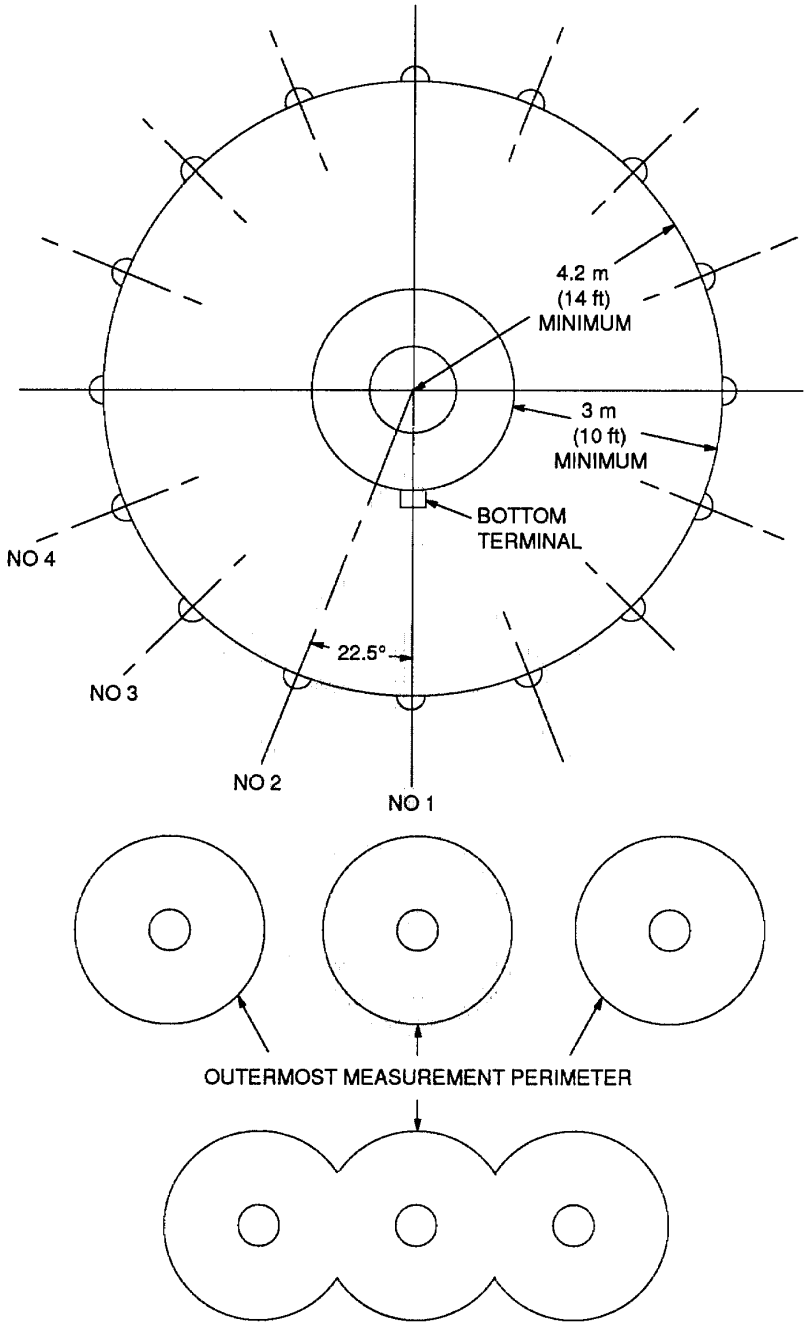

Figure 8—Microphone Locations for Audible-Sound Tests of Dry-Type Shunt actors

Copyright © 1991 IEEE All Rights Reserved

Copyright The Institute of Electrical and Electronics Engineers, Inc.
Provided by IHS under license with IEEE
No reproduction or networking permitted without license from IHS
Not for Resale

10.6.5.6

The unit shall be connected for, and energized at, rated voltage and frequency. The harmonic factor of the voltage shall not exceed 1%.

NOTE—The harmonic factor is defined in IEEE C57.12.80 1978 [11] and IEEE Std 100 1988 [23].

10.6.6 Optional Frequency-Analysis Measurements

10.6.6.1

When specified, frequency analysis shall be made in accordance with 10.6.2, 10.6.3, and 10.6.4 for either octave, one-third octave, or discrete-frequency measurements.[18] Either the *A*-weighting, the *C*-weighting, or the flat-response-meter characteristic may be specified. The weighting characteristic used shall be reported with the data.

10.6.6.2

Octave or one-third-octave band frequency-analysis measurements shall cover the interval of midband frequencies from 63 Hz through 4000 Hz. Discrete frequency-analysis measurements shall cover the fundamental through the seventh harmonic component (fundamental component is twice the excitation frequency).

10.6.6.3

The average level for each frequency band measured shall be determined by taking the power average of the individual readings about the shunt reactor. Thus,

$$L_x = 10 \log_{10}\left(\sum_{n=1}^{n} 10^{\frac{L_i}{10}}\right) \text{dB} \qquad \text{(Eq 10)}$$

where

L_x = average level for the *X* frequency band
L_i = level in the *X* frequency band at the *i*th measurement point
n = total number of measurement points

If the components are *with A weighting*, the average is then *with A weighting*.

10.6.6.4

If the average sound level in dB(A), as defined in 10.6.5.2, is to be determined from the individual *A*-weighted frequency-band measurements at each microphone position, then an *A*-weighted sound level shall be calculated for each microphone position from the frequency-band measurements as follows:

$$L_A = 10 \log_{10}\left(\sum_{j=1}^{n} 10^{\frac{L_j}{10}}\right) \text{dB(A)} \qquad \text{(Eq 11)}$$

where

L_A = average calculated *A*-weighted sound level
L_j = band level with *A* weighting for the jth band
n = total number of bands

For both oil-immersed and dry-type shunt reactors, the average sound level in dB(*A*) shall be taken to be the quadratic mean as calculated in 10.6.6.5.

[18]See footnote 16.

--`,,```,,,,````-`-`,,`,,`,`,,`---
Copyright © 1991 IEEE All Rights Reserved

Copyright The Institute of Electrical and Electronics Engineers, Inc.
Provided by IHS under license with IEEE
No reproduction or networking permitted without license from IHS
Not for Resale

The arithmetic mean may be used to determine an approximate value for the average sound level in dB(*A*).

10.6.6.5 Calculation of Average Sound Level

An average sound level value $\overline{L}_A$ shall be calculated from the measured values of the *A*-weighted sound level L_{Ai} by using the following equation:

$$\overline{L}_A = 10 \log_{10} \frac{1}{N} \left(\sum_{i=1}^{i=N} 10^{0.1 L_{AI}} \right) \quad \text{(Eq 12)}$$

where

$\overline{L}_A$ = average sound level in dB
L_{Ai} = measured sound level at station *i* in dB
N = total number of measurement stations

It should be noted that the above calculated value may have to be corrected for the following factors:

1) Background or ambient noise level
2) Acoustic influences of the location where sound readings are taken, e.g., reverberant properties of the test lab

10.7 Vibration Tests on Oil-Immersed Shunt Reactors

10.7.1 General

The design and construction of oil-immersed shunt reactors should be such as to avoid the detrimental effects of excessive stress due to vibration. Areas of primary concern in the control of vibration to ensure proper performance are as follows:

1) Vibration of core and coil assembly
   NOTE— Movement of the core and coil assembly and shielding structure, caused by the time-varying magnetic forces, results in vibration of the tank and ancillary equipment. However, due to the variations in the present design practices, it is not practical to define a test code for acceptance tests covering the vibration of the core and coil assembly. Development tests are not included in the scope of this test code.
2) Vibration of tank with associated stresses developed in plates, braces, and welded seams
3) Vibration of instruments, accessories, and cooling equipment

10.7.2 Preparation for Tests

The shunt reactor under test shall be completely assembled in normal operating condition with cooling equipment, gages, and accessories mounted and connected.

The shunt reactor should be mounted on a level surface that will provide proper bearing for the base, in order to eliminate the generation of abnormal tank stresses.

10.7.3 Method of Measurement

The vibration of shunt reactor components shall be measured by transducers, optical detectors, or equivalent measuring devices. The measuring equipment shall be accurate within ±10% at the second harmonic of the exciting frequency. The peak-to-peak amplitude shall be determined by direct measurement, or calculated from acceleration or velocity measurements.

Copyright © 1991 IEEE All Rights Reserved

Copyright The Institute of Electrical and Electronics Engineers, Inc.
Provided by IHS under license with IEEE
No reproduction or networking permitted without license from IHS Not for Resale

10.7.4 Test Conditions

The shunt reactor shall be energized at rated voltage and frequency. Three-phase excitation is required for three-phase units. When available test power is insufficient for testing at rated voltage and/or three-phase excitation, the manufacturer shall demonstrate to the user that reduced-voltage testing shall produce sufficiently accurate results at rated conditions. The manufacturer shall notify the user of this condition during the proposal stages. Factory tests at ambient temperature are acceptable, but vibration measurements should be made, if a temperature rise test is required, as soon as possible after the thermal test. If tests are made at ambient temperature, readings should be taken as quickly as possible to minimize changes in the temperature of the shunt reactor components.

10.7.5 Number of Measurements

10.7.5.1 General

The minimum number of readings required will be 48. Additional readings will depend upon the size and complexity of the shunt reactor core and coil construction, and the tank design.

10.7.5.2 Tank

Each of the four sides of the shunt reactor tank shall be divided into 12 rectangular areas of approximately the same size. These areas are suitably marked and numbered for reference. Points of maximum excursion for each marked area of the tank shall be located by appropriate methods for detecting vibration patterns in the tank. Vibration readings shall be measured at these points and recorded in the final report. Readings may also be taken and recorded along tank seams, cover, and any other locations mutually acceptable to the shunt reactor manufacturer and user. When test conditions, such as safety regulations, do not permit relocation of the measuring equipment when the shunt reactor is energized, those responsible for the design and application of the shunt reactor will determine, in advance, a suitable technique for making the required measurements.

10.7.5.3 Vibration Amplitude Levels

The average amplitude of all local maximum points shall not exceed 60 μm (2.36 mils) peak-to-peak. The maximum amplitude within any rectangular area shall not exceed 200 μm (7.87 mils) peak-to-peak.

10.7.5.4 Instruments, Accessories, and Cooling Equipment

Instruments, accessories, and oil-cooling equipment shall be observed for evidence of vibration during the factory test (see 10.7.2, 10.7.3, and 10.7.4).

10.8 Vibration Tests on Dry-Type Shunt Reactors

10.8.1

The design and construction of dry-type shunt reactors should be such as to avoid the detrimental effects of excessive stress due to vibration.

10.8.2

Since all parts of dry-type shunt reactors above base-support insulators are at elevated potential, a non-energized test of natural frequencies shall be performed when specified.

This test shall consist of an impact force on the reactor components of concern, and the determination of the component natural frequencies and percentage damping due to this impact load. An impact-load hammer and accelerometers shall be used to record the impact force and response of the component being tested.

Copyright © 1991 IEEE All Rights Reserved

Copyright The Institute of Electrical and Electronics Engineers, Inc.
Provided by IHS under license with IEEE
No reproduction or networking permitted without license from IHS Not for Resale

The purpose of the test is to demonstrate that the natural frequency of the component is not co-incident with a frequency in the vicinity of double the system frequency.

10.9 Magnetic Characteristic Measurements

When specified, and if power requirements are attainable, the magnetic characteristics of a shunt reactor shall be measured at rated frequency, up to a maximum operating voltage or slightly higher, if mutually agreeable between user and manufacturer.

The results are normally expressed in terms of the rms value of voltage and current, as long as the curve is linear or in the nonsaturated region. Otherwise, the results must be expressed in terms of flux linkages and peak currents (see Fig 1).

10.10 Seismic Performance Verification on Oil-Immersed and Dry-Type Shunt Reactors

When specified, a seismic performance verification shall be carried out using analytical methods, by testing under simulated seismic conditions, or by combined test and analysis as described in IEEE Std 344-1987 [25].

11. Construction for Oil-Immersed Shunt Reactors

11.1 Bushings

11.1.1

Shunt reactors shall be equipped with bushings of an insulation class not less than that of the winding terminal to which they are connected, unless otherwise specified.

11.1.2

Electrical characteristics of outdoor shunt reactor bushings shall be as listed in IEEE Std 21-1976 [21].

11.1.3

Bushings for use with outdoor shunt reactors shall have dimensions as listed in IEEE Std 21-1976 [21].

11.2 Bushing-Type Current Transformers

11.2.1

Bushing-type current transformers, used with bushings having dimensions in accordance with IEEE Std 21-1976 [21], shall have an inside diameter adequate to accommodate the maximum *D* dimensions for those bushings, as shown in the applicable tables.

11.2.2

When specified, bushing-type current transformers, or provision for their addition in the future, shall be multiratio with accuracy classification and taps, as specified by IEEE C57.13-1978 [12].

Copyright © 1991 IEEE All Rights Reserved

Copyright The Institute of Electrical and Electronics Engineers, Inc.
Provided by IHS under license with IEEE
No reproduction or networking permitted without license from IHS Not for Resale

11.2.3

All bushing current transformer secondary leads shall be brought to an outlet box.

11.2.4

Nonsplit terminal blocks shall be provided in a weather-resistant case of the nonsplit type, located near the shunt reactor base for terminating alarm circuits specified in 11.3.4, and current transformer secondaries specified in 11.2.2

11.2.5

On shunt reactors 1000 kVA and larger, provision shall be made for removing bushing-type current transformers from the shunt reactor tank without removing the entire tank cover of the shunt reactor in which they are to be used.

11.3 Accessories

11.3.1

The following accessories described in 11.3.2 through 11.3.10 shall be provided:

Accessories	Section
Liquid-level indicator	11.3.2
Liquid-temperature indicator	11.3.3
Temperature and liquid-level indicator alarm contacts	11.3.4
Pressure-vacuum gage	11.3.5
Drain and filter valves	11.3.6
Jacking facilities	11.3.7.3
Nameplate	11.3.8
Ground pad	11.3.10
Pressure-relief device	11.3.12

11.3.2 Liquid-Level Indicator

A liquid-level indicator shall be mounted so as to be readable at the level of the base. Dial markings shall show 25 °C level and the minimum and maximum levels. The words “liquid level” shall be shown on the face of the dial, or on a suitable nameplate adjacent to the indicator.

11.3.3 Liquid-Temperature Indicator

A dial-type thermometer shall be mounted on the side of the tank.

The temperature indicator must have resettable maximum temperature limits with corresponding contacts.

Copyright © 1991 IEEE All Rights Reserved

Copyright The Institute of Electrical and Electronics Engineers, Inc.
Provided by IHS under license with IEEE
No reproduction or networking permitted without license from IHS Not for Resale

The thermometer shall be either a direct-stem-mounted unit or a temperature-sensing unit for remote eye-level indication. Either unit shall be mounted in a closed well located at a suitable level to indicate the top-oil temperature. For the dimensions of the well, see Fig 9.

The dial markings shall cover a minimum range of 0 °C to 120 °C. The words “liquid temperature” shall be shown on the dial of the thermometer, or on a suitable nameplate mounted adjacent to the indicator.

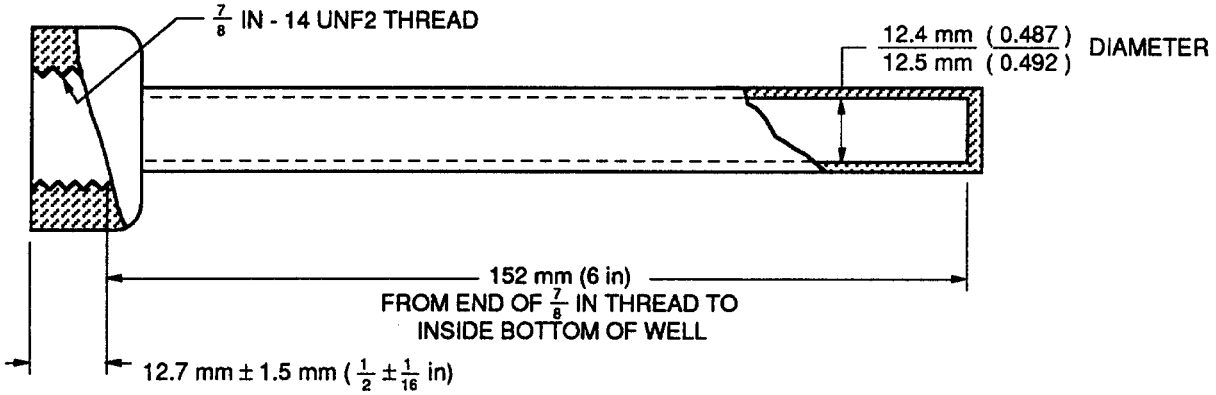

Figure 9—Dimensions of Thermometer Well

11.3.4 Temperature and Liquid-Level-Indicator Alarm Contacts

11.3.4.1 Alarm Contacts

Nongrounded alarm contacts for liquid-level indicators and temperature indicators shall be suitable for interrupting

1) 0.02 A direct-current inductive load
2) 0.20 A direct-current noninductive load
3) 2.5 A alterating-current noninductive or inductive load
4) 250 V maximum in all cases

The liquid-level-indicator alarm contacts shall be nonadjustable, and shall be set to close at the minimum safe operating level of the liquid.

The liquid-temperature-indicator alarm contacts shall be adjustable over a range of 65 °C to 110 °C.

The winding-temperature-indicator alarm contacts shall be adjustable over a range of 95 °C to 125 °C.

11.3.4.2 Contact Wiring and Wire Color Coding

Contacts shall be in accordance with Fig 10, using cable with the color coding in Fig 10.

11.3.5 Pressure-Vacuum Gage

A pressure-vacuum gage shall be provided for shunt reactors of sealed-tank and gas-oil-sealed construction.

11.3.6 Drain and Filter Valves

A combination drain and lower filter valve, of the ball or globe type, shall be located on the side of the tank.

Copyright © 1991 IEEE All Rights Reserved

Copyright The Institute of Electrical and Electronics Engineers, Inc.
Provided by IHS under license with IEEE
No reproduction or networking permitted without license from IHS Not for Resale

This valve shall provide for drainage of the liquid to within 25 mm (1 in) of the bottom of the tank.

The drain valve shall have a built-in 10 mm (3/8 in) sampling device that shall be located in the side of the valve between the main valve seat and the pipe plug.

The device shall be supplied with a 5/16-in 32 male thread for the user's connection, and shall be equipped with a cap.

The size of the drain valve shall be 25 mm (1 in) for shunt reactors through 2500 kVA, and 50 mm (2 in) for larger kVA ratings, and shall have NPT threads (in accordance with ANSI/ASME B1.20.1-1983 [6]) with a non-ferrous metallic-pipe plug in open ends.

Valves should not be located below any control cabinets. Shunt reactors through 2500 kVA shall have a 25 mm (1 in) upper filter plug, or cap, located above the maximum liquid level.

Shunt reactors above 2500 kVA shall have an upper filter valve, of the ball or globe type, located below the 25 °C liquid level.

The size of the upper filter valve shall be 50 mm (2 in), and it shall have 2-in NPT threads (in accordance with ANSI/ASME B1.20.1-1983 [6]) with a non-ferrous metallic-pipe plug in open ends.

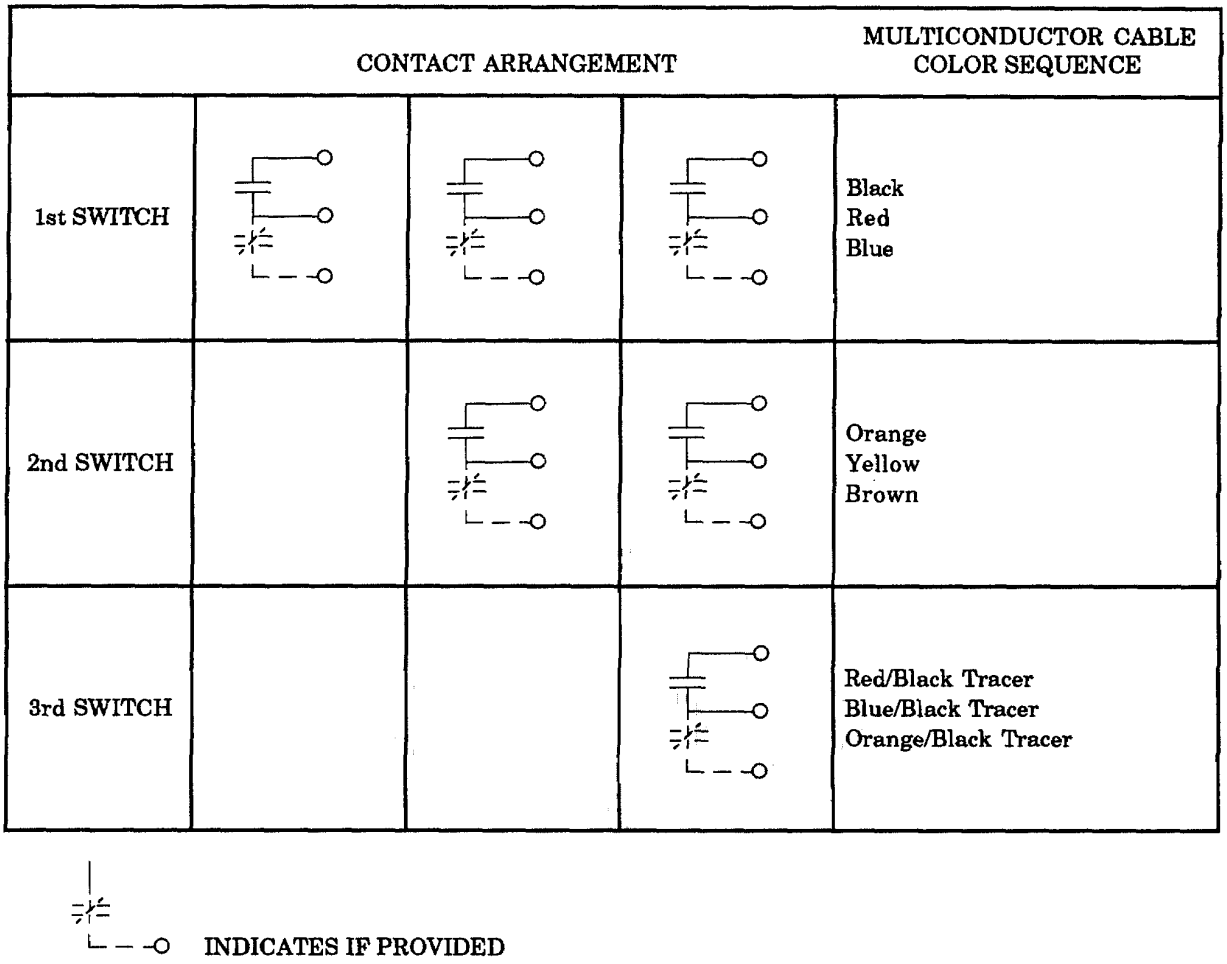

Figure 10—Contact Wiring and Wire Color Coding

Copyright © 1991 IEEE All Rights Reserved

Copyright The Institute of Electrical and Electronics Engineers, Inc.
Provided by IHS under license with IEEE
No reproduction or networking permitted without license from IHS
Not for Resale

11.3.7 Lifting, Moving, and Jacking Facilities

11.3.7.1 Lifting Facilities

Lifting eyes shall be provided for lifting the cover only.

Adequate facilities shall be provided for lifting the core and coil assembly from the tank. Lugs for lifting the complete shunt reactor shall be provided. The bearing surfaces of the lifting lugs shall be free from sharp edges, and each lifting lug shall be provided with a hole having a minimum diameter of 21 mm (13/16 in) for guying purposes.

11.3.7.2 Moving Facilities

The base of the shunt reactor shall be designed to permit rolling in the direction of center lines, and provision shall be made for pulling the reactor in these directions.

The base should be designed so that the center of gravity of the shunt reactor, as normally prepared for shipment, should not fall outside the base support members for a tilt of the base of 15° from the horizontal, with or without oil in the shunt reactor.

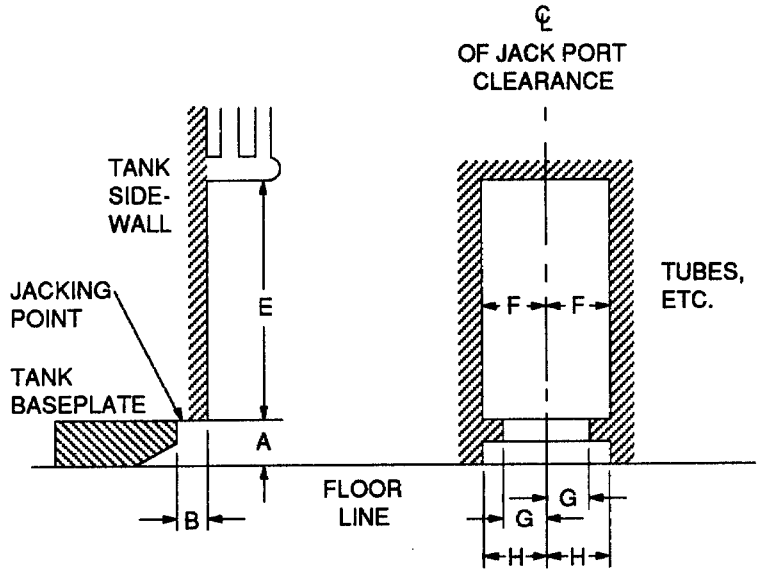

	Weight 35 000 lb (15 900 kg) or Less				Weight 35 000–65 000 lb (15 900–29 500 kg)				Weight Over 65 000 lb (29 500 kg)			
A	88.9 mm	3-1/2	in	A	127 mm	5	in	A	457 mm	18	in
B	63.5 mm	2-1/2	in	B	63.5 mm	2-1/2	in	B	102 mm	4	in
E	686 mm	27	in	E	686 mm	27	in	E	508 mm	20	in
F	127 mm	5	in	F	127 mm	5	in	F	127 mm	5	in
G	76.2 mm	3	in	G	76.2 mm	3	in	G	76.2 mm	3	in
H	127 mm	5	in	H	127 mm	5	in	H	127 mm	5	in

NOTES:
(1) Dimensions E, F, G, and H are free clearances.
(2) Where required in manufacturer's standards designs, any dimensions may be in excess of those shown.
(3) E applies to non removeable coolers only.
(4) Weight includes completely assembled reactor and fluid.

Figure 11—Provision for Jacking

Copyright © 1991 IEEE All Rights Reserved

Copyright The Institute of Electrical and Electronics Engineers, Inc.
Provided by IHS under license with IEEE
No reproduction or networking permitted without license from IHS
Not for Resale

11.3.7.3 Jacking Facilities

Jacking facilities shall be located near the corners of the tank. Dimensions and clearances for jacking provisions shall be as shown in Fig 11.

11.3.8 Nameplate

A stainless-steel diagram nameplate (conforming to ASTM A167-90 [8], Grade 2) shall be provided. The name-plate shall include the following information:

1) The words “shunt reactor”
2) Serial number (see NOTE 1)
3) Class (OA)
4) Number of phases
5) Frequency
6) Rated kVA (see NOTE 1)
7) Rated voltage (see NOTE 1)
8) Temperature rise(s), °C
9) Name of manufacturer
10) Year of manufacture
11) Measured impedance in ohms per phase at rated voltage
12) Approximate masses in kg (lb) (see NOTE 2)
13) Number of cubic meters (gal) of oil (see NOTE 3)
14) Connection diagram (see NOTE 4)
15) Service conditions, if special
16) Reference to instruction book or sheet
17) Basic lightning-impulse insulation levels (BIL) (see NOTE 5)
18) Symbols (see NOTE 6)
19) Patent numbers at manufacturer’s option.
20) Winding material
21) Type of oil

NOTES:

1 — The height of letters and numerals showing kVA, serial number, and voltage ratings shall be 4 mm (5/32 in) whether engraved or stamped. Height of other letters and numerals shall be optional with the manufacturer.

2 — The approximate weight in kg (lb) for the following items shall be shown for oil-immersed shunt reactors:

a) Core and coils
b) Tank and fittings
c) Oil
d) Total weight
e) Untanking (heaviest piece)

3 — The number of cubic meters (gal) of insulating liquid, referred to elsewhere in this standard as oil, shall be shown for the main tank and for each oil-filled compartment.

4 — All leads brought outside the tank and all windings shall be identified on the nameplate, or on the connection diagram.

A schematic view shall be included to show the relative location of external leads and internal terminals.

All internal leads and terminals that are not permanently connected shall be designated or marked with numbers or letters in a manner that will permit convenient reference, and will obviate confusion with terminal and polarity markings.

Where development of windings is shown, the scallop symbol should be used in accordance with IEEE Std 315-1975 [24].

5 — The full-wave basic lightning-impulse insulation level, in kV, of line and of neutral terminals shall be designated.

6 — The following symbols shall be used where applicable:

Copyright © 1991 IEEE All Rights Reserved

Copyright The Institute of Electrical and Electronics Engineers, Inc.
Provided by IHS under license with IEEE
No reproduction or networking permitted without license from IHS
Not for Resale

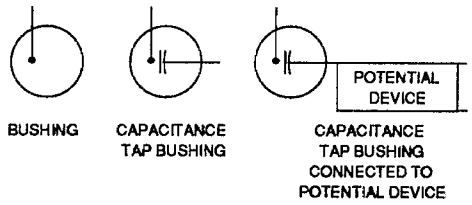

11.3.9 Additional Nameplate Information

In addition to the information specified in 11.3.8, the following shall be included on the nameplate when applicable:

1) Indication of potential transformers, potential devices, current transformers, winding temperature devices, etc., when used.
2) Polarity and location identification of current transformers to be shown, if used for metering or relaying. (Polarity need not be shown if current transformers are used for winding temperature equipment.)
3) Maximum operating pressures of oil preservation system—kPa (lbf/in^2) positive, and kPa (lbf/in^2) negative.
4) Tank designed for—kPa (lbf/in^2) positive, and kPa (lbf/in^2) vacuum filling.
5) Oil level below top surface of the highest point of the highest manhole flange at 25 °C—mm (in). Oil level changes—mm (in) per 10 °C change in oil temperature. (This applies only to shunt reactors that have a gas cushion above the oil.)

11.3.10 Ground Pads

Tank grounding provisions shall consist of two copper-faced steel pads or two stainless-steel pads without copper facing, each 50 mm × 90 mm (2 in × 3-$^1/_2$ in), with two holes horizontally spaced on 44.5 mm (1-$^3/_4$ in) centers, and drilled and tapped for $^1/_2$-in 13 National Coarse Thread. The minimum thickness of copper facing shall be 0.4 mm (0.015 in).

Thread protection for the ground pad shall be provided.

Ground pads shall be welded on the base, or on the tank wall near the base, and shall be located diagonally opposite from each other, so as not to interfere with the jacking facilities.

11.3.11 Control Wiring

All control wiring must have a minimum of 600 V insulation class.

11.3.12 Pressure-Relief Device

A pressure-relief device shall be provided on the shunt reactor cover.

11.4 Terminal Markings

The winding or windings of a shunt reactor shall be distinguished from one another by marking each terminal with an H followed by one of the numbers 1, 2, or 3, used as a subscript.

Any neutral end of the winding or windings of a shunt reactor shall be designated by using a 0, 01, 02, or 03, as a subscript for the H following the form of H_0, H_{01}, H_{02}, or H_{03}

The terminal markings of a three-phase oil-immersed shunt reactor shall increase from right to left when facing the highest voltage side of the tank, in the form H_1, H_2, H_3.

Copyright © 1991 IEEE All Rights Reserved

Copyright The Institute of Electrical and Electronics Engineers, Inc.
Provided by IHS under license with IEEE
No reproduction or networking permitted without license from IHS Not for Resale

A single-phase shunt reactor shall have the following terminal designation: H_1, H_0.

11.5 Oil Preservation

The nitrogen for use with inert-gas-protected shunt reactors shall be dry nitrogen with less than 0.5% by volume of impurities and less than 0.03% by weight of moisture.

The nitrogen shall be supplied in 5.66 m^3 (200 ft^3) cylinders equipped with connection no. 580 of ANSI/CGA V-1-1987 [7]. The filling pressure is to be 15.2 mPa (2200 lbf/in^2) at 21 °C. Before it is filled, the cylinder shall be thoroughly cleaned of water or other impurities so that the nitrogen will not be contaminated. The cylinder with outlet fitting, after being filled with nitrogen, shall be soap-film tested at all joints for leaks. It shall not leak.

11.6 Oil-Preservation Systems

One of the following oil-preservation systems shall be provided on shunt reactors conforming to this standard.

11.6.1 Sealed-Tank System

A sealed-tank system is one in which, (1) the interior of the shunt reactor will be sealed from the atmosphere throughout a top-oil temperature range of 100 °C, and (2) the gas-plus-oil volume will remain constant, such that the internal gas pressure will not exceed 69 kPa (10 lbf/in^2) positive or 55 kPa (8 lbf/in^2) *negative*.

A pressure-vacuum bleeder device set to operate at the maximum operating pressures (positive and *negative*) indicated on the nameplate shall be furnished.

11.6.2 Inert-Gas Pressure System

An inert-gas pressure system is a system in which the interior of the shunt reactor will, by means of a positive pressure of inert gas maintained from a separate inert-gas source and reducing-valve system, be sealed from the atmosphere throughout a top-oil temperature range of 115 °C, and the internal gas pressure will not exceed 34 kPa (5 lbf/in^2).

11.6.3 Conservator or Expansion-Tank System

A conservator or expansion-tank system is one that, by means of an auxiliary tank partly filled with oil connected to the completely filled main tank, seals the oil in the main tank from the atmosphere by means of an air cell or diaphragm throughout a top-oil temperature range of 115 °C. The internal top-oil pressure in the main tank will not exceed 34 kPa (5 lbf/in^2).

11.7 Tanks

11.7.1 Operating Pressures

Maximum operating pressures (positive and negative), for which the shunt reactor is designed, shall be indicated on the nameplate. The main shunt reactor tank, and any compartment attached thereto that is subject to the operating pressures, shall be designed to withstand, without permanent deformation, a pressure 25% greater than the maximum operating pressures,[19] resulting from the system of oil preservation used.

[19]Individual designs may not necessarily reach the maximum pressures indicated in the definition of oil preservation systems.

Copyright © 1991 IEEE All Rights Reserved

Copyright The Institute of Electrical and Electronics Engineers, Inc.
Provided by IHS under license with IEEE
No reproduction or networking permitted without license from IHS Not for Resale

11.7.2 Vacuum Filling

Tanks shall be designed for vacuum filling (essentially full vacuum) in the field on all shunt reactors with a high-voltage system-voltage level of 69 kV and above, and on all shunt reactors rated 10 000 kVA and larger, any system-voltage level.

11.7.3 Cover Construction

A bolted or welded main cover shall be provided.

11.7.4 Core Ground

A single-core ground shall be provided and accessible without removing oil.

11.7.5 Manholes

Shunt reactors 1000 kVA and larger shall have manholes in the cover. Manholes, if circular, shall be a minimum of 460 mm (18 in) in diameter. If rectangular or oval, they shall have minimum dimensions of 360 mm × 460 mm (14 in × 18 in).

11.8 Shunt Reactor Finish

The finish for shunt reactor tanks shall consist of a pigment paint.[20]

11.9 Other Equipment Accessories

11.9.1 Power Supply Voltage for Shunt Reactor

The power supply voltage for the shunt reactor controls shall be provided by the user.

11.9.2 Alarm and Protection Devices

Devices required for the protection of shunt reactors are listed as follows:

1) A thermally-operated alarm-circuit device, with the thermal element mounted in a well and responsive to the top-oil temperature of the shunt reactor.The device should have two sets of contacts with factory settings as follows:

Contact	Function
1	Spare
2	Initiate alarm or actuate relay

Nongrounded alarm contacts shall be suitable for interrupting:

a) 0.02 A direct-current inductive load
b) 0.20 A direct-current noninductive load
c) 2.5 A alternating-current inductive or noninductive load
d) 250 V maximum in all cases (ac or dc)

[20]Metallic flake paints, such as aluminum, zinc, etc., have properties that increase the temperature rise of shunt reactors, except in direct sunlight. Temperature limits and tests are Based upon the use of a pigment paint finish.

Copyright © 1991 IEEE All Rights Reserved

Copyright The Institute of Electrical and Electronics Engineers, Inc.
Provided by IHS under license with IEEE
No reproduction or networking permitted without license from IHS Not for Resale

2) A weather-resistant cabinet enclosing the switching equipment, located on the shunt reactor at a height suitable for operation by a person standing at the level of the base.
3) Wiring for control.

11.9.3 Surge Arresters

The following types of construction are available for surge protection:

1) Provision only for the mounting of surge arresters
2) Mounting complete with surge arresters
3) Surge-arrester ground pad, consisting of a tank-grounding pad (in accordance with 11.3.10) mounted near top of the tank, may be specified for each set of arresters. Exception: Where the separation of the arrester stacks is such that individual pads for grounding each phase arrester represent better design, individual ground pads may be supplied.

NOTE— Material for connecting surge arresters to live parts and to ground pads is not included in 11.9.3.

12. Construction and Installation of Dry-Type Shunt Reactors

12.1 General Description

All parts of dry-type shunt reactors are "live," unlike oil-immersed units where the tank is grounded. The only external live parts of an oil-immersed shunt reactor are the bushings.

Dry-type shunt reactors do not have an iron core. Therefore, the magnetic field is not constrained, and will occupy the space around the dry-type reactor. Although the magnetic field reduces in strength with increase in distance from the reactor, the presence of this field must be taken into consideration in many dry-type shunt reactor installations.

In the following sections, key issues are discussed, and some guidance is given to the user of dry-type shunt reactors.

12.2 Safety

A dry-type shunt reactor is not enclosed in a grounded steel tank. All parts of the reactor must be considered to be live. This also includes the situation in which the breaker used to switch the shunt reactor is located at the neutral end. Thus, even when the reactor is not carrying current, it is floating at line potential (unless disconnected on the line side).

Therefore, dry-type shunt reactors must be installed such that accidental contact by station personnel is not possible. Two methods that can be used to achieve this are fencing, and elevating the reactor at a safe distance above ground.

When fencing is employed, consideration must be given to the stray magnetic field of the air-core reactor. Metallic fencing should be broken up into electrically insulated sections if it is located very near the reactor. Consideration should also be given to the fact that when metallic fencing is used in high voltage substations, capacitively coupled voltage may appear on the fence sections. Grounding of the fence sections is important. Care should be taken not to form shorted electrical loops by using a single ground connection per section of fence. The use of nonmetallic fencing, which is now readily available, can eliminate many of the induced current problems.

Another option that is widely used is to elevate the reactor a distance off the ground so that live parts are not accessible to station personnel. Typically, eight-foot pedestals are used. Reactors can be mounted on concrete pilings (care must be taken to ensure that excessive heating of reinforcement bar does not occur), fiberglass pedestals, metallic structures specially designed such that closed loops do not occur, etc. It should be emphasized that in all cases, the supporting structure must also be appropriately designed to avoid eddy-current heating of metallic parts. Other factors, such as

Copyright © 1991 IEEE All Rights Reserved

Copyright The Institute of Electrical and Electronics Engineers, Inc.
Provided by IHS under license with IEEE
No reproduction or networking permitted without license from IHS
Not for Resale

correct selection of materials (stainless steel) and orientation, must be observed. Otherwise, very high temperatures could be encountered that would be hazardous to station personnel and/or cause weakening of the support structure.

When employing dry-type shunt reactors, care should be taken in the installation of the station ground grid in the vicinity of the reactors. The ground grid should be designed so as not to have shorted loops. Otherwise, currents could be induced in the grid. Grounding of other ancillary support structures or equipment in the vicinity of the reactors should be accomplished without creating closed loops in the grounding system.

In all, it is preferable that support structures and fencing be designed or reviewed by the manufacturer of the shunt reactor.

12.3 Magnetic Clearances

Since dry-type shunt reactors have no magnetic core, the magnetic field occupies a space around the reactor and, depending on the mVA of the unit, can be of a substantial strength even at some distance from the reactor. This alternating magnetic field can induce currents in nearby metallic geometries.

There are some simple rules of thumb that can be employed. Clearance to small metallic parts not forming closed loops should be at least one-half the coil diameter radially from the edges of the reactor. Larger geometries or closed loops should be located at least one coil diameter from all the surfaces of the reactor. These are rules of thumb which generally can keep the user out of trouble. However, it is advisable that the manufacturer be consulted, as he or she should have at his or her disposal very accurate field-plot programs and sophisticated analysis tools to calculate losses and temperature rise in metallic geometries located in magnetic fields.

What this means is that circuit breakers, equipment housings, CT's, surge arresters, and other equipment should be safely located to ensure that the magnetic field of the reactor does not adversely affect equipment performance. In addition, any metallic support structures for bus bar, etc., should also be designed to avoid overheating due to induced eddy currents.

It should be emphasized that in cases where space is limited, the rules of thumb indicated above may be substantially reduced. The use of special materials such as fiber-reinforced plastics, austenitic stainless steel, and nonmagnetic shielding can allow the trouble-free installation of dry-type shunt reactors in limited space. This step should not be taken without a careful review by the reactor manufacturer.

12.4 Connections

Since bus connections with dry-type shunt reactors are metallic, care should be taken in properly selecting the type of bus, since it is also exposed to the magnetic field of the reactor and thus can be susceptible to eddy-current heating. As a rule of thumb, the eddy losses in any metallic geometry in a magnetic field are proportional to the major geometry to the fourth power. Therefore, large tubular bus would have significantly higher eddy losses than stranded cable. In the case of stranded cable, eddy losses are substantially reduced due to the stranding. Bus bar can be used if it is designed to be streamlined to the magnetic field (i.e., rectangular bus appropriately orientated). A good concept is to use bus bar for longer runs, and make the final 2–3 m (6–9 ft) of connection to the reactor using stranded cable.

By using cable for the last 2–3 m (6–9 ft), eddy losses can be kept to a minimal level. Beyond the 2–3 m (6–9 ft) distance, the field of reactors should be substantially reduced.

If terminal temperature rise is a concern, the utilization of higher-ampere-capacity cable than is required will effectively heat sink the terminal area and maintain a low temperature rise in a bolted connection. However, it must be emphasized that the terminal temperature rise is a function of the contact resistance, throughput current, and the eddy heating.

Copyright © 1991 IEEE All Rights Reserved

Copyright The Institute of Electrical and Electronics Engineers, Inc.
Provided by IHS under license with IEEE
No reproduction or networking permitted without license from IHS Not for Resale

The connector itself is also very important if terminal temperature rises are to be kept within bounds. The connector used should also attempt to have geometries that are stream-lined to the magnetic field. Connectors that have large contact surface area, but do not provide a large frontal area to the magnetic field, are preferable.

Again, the manufacturer of dry-type shunt reactors is the best source of information regarding the type of connector and bus run to be used when connecting dry-type shunt reactors.

It should be recognized that not all of the above precautions will be necessary on every shunt reactor installation. Generally, the larger the mVA rating, the more important these factors become. For example, for units rated roughly 15 mVA and less, many satisfactory installations exist where tubular bus is used for direct connection to the reactor terminal without problems.

12.5 Installed Sound Level

The measurement of sound level is a test sometimes performed on dry-type shunt reactors as it is with oil-immersed equipment. How the reactor is installed will also have an impact on observed sound level. This is true also for oil-immersed equipment. Foundation design, ground cover, and nearby reflecting surfaces can all have an impact on the perceived sound level. Avoidance of standing waves is very critical to achieving low sound level.

12.6 Concrete Foundations

There are several critical factors in designing foundations for dry-type air-core shunt reactors. As with any piece of large equipment, a rule of thumb to ensure that no vibration occurs is to design the concrete support base to have at least triple the mass of the equipment to be installed. If bedrock at site is very near the surface, or if the soil conditions warrant it, a base of reduced mass can be used.

Another factor that must be considered is the use of rebar. In most cases, the distribution of the coil mass on the concrete base results in the concrete being very lightly loaded. Therefore, rebar may not be necessary. If rebar is necessary, nonmetallic or stainless-steel rebar would eliminate potential eddy heating problems. Also, where metallic rebar is used, the crossover points should be electrically isolated to prevent closed loops. Pieces of hose slipped over the rebar at the crossover is sufficient. If clearances greater than the coil diameter are used below the reactor, then precautions of isolating the rebar to prevent shorted loops and selecting stainless-steel or nonmetallic material may not be necessary.

The final major consideration is the anchoring system used to secure the coil-support structure to the concrete base. The anchors must be located deep enough in the concrete, and be designed to resist the overturning load imposed on the coil and its structure due to wind loading or seismic excitation. This is most important for reactors located on top of tall support structures (e.g., fiberglass pedestals) to give required clearance for station personnel.

Again, the manufacturer of dry-type shunt reactors is the best source of definitive information.

12.7 Switching — Circuit Breakers

The type of breaker used and the location of the breaker are very complicated subjects. Breakers can be located on the line side of the reactor. Many installations utilize a breaker on the neutral side of the reactor. Another factor is how often the reactor has to be switched. This will dictate the type of breaker used for the operation.

More detailed discussions in this area are beyond the scope of this document. However, one of the most significant considerations is that circuit breaker interrupting characteristics are very much dependant upon circuit breaker technology and the electrical characteristics of the circuit. The high-frequency characteristics of station bus work must be taken into consideration. In conjunction with this, it is also reasonable to ensure that detailed knowledge of the

Copyright © 1991 IEEE All Rights Reserved

Copyright The Institute of Electrical and Electronics Engineers, Inc.
Provided by IHS under license with IEEE
No reproduction or networking permitted without license from IHS Not for Resale

electrical characteristics of the reactors at frequencies near the natural frequency of the reactors be incorporated into any decision-making process.

The above comments apply equally to both oil-immersed iron-core shunt reactors and dry-type shunt reactors.

12.8 Protection Practices for Air-Core Shunt Reactors

While modern dry-type air-core reactors are generally very reliable pieces of equipment that seldom fail, it is advisable to take at least some precautions in their protection to minimize the extent and cost of potential coil failure.

Many alternative protection schemes exist, each with an associated cost.

When protecting dry-type shunt reactors, the protection engineer should endeavor to provide a low-cost scheme which ensures that failure of one unit in a three-phase bank will not result in consequential failure of the units in adjacent phases. This objective should be in addition to the common priority of ensuring that a coil fault will not damage the associated transformer.

Copyright © 1991 IEEE All Rights Reserved

--`,,```,,,,````-`-`,,`,,`,`,,`---

Copyright The Institute of Electrical and Electronics Engineers, Inc.
Provided by IHS under license with IEEE
No reproduction or networking permitted without license from IHS Not for Resale

Annex A Appendix to Dielectric Tests Including Information on Wave Shape Control

(Informative)

(This Appendix is not part of IEEE C57.21-1990, IEEE Standard Requirements, Terminology, and Test Code for Shunt Reactors Rated Over 500 kVA, but is included for information only.)

The maximum half-value time T_2 of an impulse-wave tail can be derived from the resonance frequency of the impulse generator capacitance (C_g) with the test object reactance (L_t).

$$T_2 = \frac{\pi}{3}\sqrt{L_t C_g} \qquad \text{(Eq 1)}$$

This is a theoretical value applying to an undamped oscillation with an opposite polarity peak of 100%. Various amounts of circuit damping will reduce this value accordingly. With a limitation of 50% for the opposite polarity peak, for instance,

$$T_2 \approx \sqrt{0.5 L_t C_g} \qquad \text{(Eq 2)}$$

Values of T_2 close to Eq 1 above can be achieved with the use of an inductor in parallel with the series (front) resistor of the impulse circuit, with compromises generally required between wave duration, opposite polarity peak, wave front time, and peak overshoot.

The manufacturer may also elect to test a low-impedance winding by inserting a resistor of not more than 500 Ω in the grounded end of the winding. Although this will improve the impulse wave shape, the largest portion of the test voltage will be across the resistor, and not across the test-coil windings. Therefore, a shorter impulse-wave tail is preferable to the insertion of a series resistor between the test object and ground.

In the case of the oil-immersed equipment, at the manufacturer's preference, low-impedance windings may be tested by tying together the terminals of windings with the same insulation level.

More information on the testing of low impedance windings can be found in IEC 722 (1982), Appendix A [10].

--`,,```,,,,````-`-`,,`,,`,`,,`---

Copyright © 1991 IEEE All Rights Reserved

Copyright The Institute of Electrical and Electronics Engineers, Inc.
Provided by IHS under license with IEEE
No reproduction or networking permitted without license from IHS

Not for Resale