IEEE Std C57.19.01-2000
(Revision of
IEEE Std C57.19.01-1991)

IEEE Standard Performance Characteristics and Dimensions for Outdoor Apparatus Bushings

Sponsor

Transformers Committee
of the
IEEE Power Engineering Society

Approved 30 January 2000

IEEE-SA Standards Board

Abstract: Electrical, dimensional, and related requirements for outdoor power apparatus bushings that have basic impulse insulation levels (BILs) of 200 kV and above are covered. Specific values for dimensional and related requirements that are to be interpreted, measured, or tested, in accordance with IEEE Std C57.19.00-1991, are provided.
Keywords: basic impulse insulation levels (BILs), cantilever test, capacitance, creepage distance, flashover, line-to-ground voltage, nominal system voltage, power apparatus bushings, power factor

---

The Institute of Electrical and Electronics Engineers, Inc.
3 Park Avenue, New York, NY 10016-5997, USA

Copyright © 2000 by the Institute of Electrical and Electronics Engineers, Inc.
All rights reserved. Published 24 March 2000. Printed in the United States of America.

Print: ISBN 0-7381-1984-9 SH94834
PDF: ISBN 0-7381-1985-7 SS94834

No part of this publication may be reproduced in any form, in an electronic retrieval system or otherwise, without the prior written permission of the publisher.

--`,,`-`-`,,`,,`,`,,`---

Copyright The Institute of Electrical and Electronics Engineers, Inc.
Provided by IHS under license with IEEE
No reproduction or networking permitted without license from IHS Not for Resale

IEEE Standards documents are developed within the IEEE Societies and the Standards Coordinating Committees of the IEEE Standards Association (IEEE-SA) Standards Board. Members of the committees serve voluntarily and without compensation. They are not necessarily members of the Institute. The standards developed within IEEE represent a consensus of the broad expertise on the subject within the Institute as well as those activities outside of IEEE that have expressed an interest in participating in the development of the standard.

Use of an IEEE Standard is wholly voluntary. The existence of an IEEE Standard does not imply that there are no other ways to produce, test, measure, purchase, market, or provide other goods and services related to the scope of the IEEE Standard. Furthermore, the viewpoint expressed at the time a standard is approved and issued is subject to change brought about through developments in the state of the art and comments received from users of the standard. Every IEEE Standard is subjected to review at least every five years for revision or reaffirmation. When a document is more than five years old and has not been reaffirmed, it is reasonable to conclude that its contents, although still of some value, do not wholly reflect the present state of the art. Users are cautioned to check to determine that they have the latest edition of any IEEE Standard.

Comments for revision of IEEE Standards are welcome from any interested party, regardless of membership affiliation with IEEE. Suggestions for changes in documents should be in the form of a proposed change of text, together with appropriate supporting comments.

Interpretations: Occasionally questions may arise regarding the meaning of portions of standards as they relate to specific applications. When the need for interpretations is brought to the attention of IEEE, the Institute will initiate action to prepare appropriate responses. Since IEEE Standards represent a consensus of all concerned interests, it is important to ensure that any interpretation has also received the concurrence of a balance of interests. For this reason, IEEE and the members of its societies and Standards Coordinating Committees are not able to provide an instant response to interpretation requests except in those cases where the matter has previously received formal consideration.

Comments on standards and requests for interpretations should be addressed to:

Secretary, IEEE-SA Standards Board
445 Hoes Lane
P.O. Box 1331
Piscataway, NJ 08855-1331
USA

Note: Attention is called to the possibility that implementation of this standard may require use of subject matter covered by patent rights. By publication of this standard, no position is taken with respect to the existence or validity of any patent rights in connection therewith. The IEEE shall not be responsible for identifying patents for which a license may be required by an IEEE standard or for conducting inquiries into the legal validity or scope of those patents that are brought to its attention.

IEEE is the sole entity that may authorize the use of certification marks, trademarks, or other designations to indicate compliance with the materials set forth herein.

Authorization to photocopy portions of any individual standard for internal or personal use is granted by the Institute of Electrical and Electronics Engineers, Inc., provided that the appropriate fee is paid to Copyright Clearance Center. To arrange for payment of licensing fee, please contact Copyright Clearance Center, Customer Service, 222 Rosewood Drive, Danvers, MA 01923 USA; (978) 750-8400. Permission to photocopy portions of any individual standard for educational classroom use can also be obtained through the Copyright Clearance Center.

--`,,`-`-`,,`,,`,`,,`---

Copyright The Institute of Electrical and Electronics Engineers, Inc.
Provided by IHS under license with IEEE
No reproduction or networking permitted without license from IHS

Not for Resale

Introduction

(This introduction is not part of IEEE Std C57.19.01-2000, IEEE Standard Performance Characteristics and Dimensions for Outdoor Apparatus Bushings.)

The tables and other information contained in this document were originally in ANSI C76.1-1943 through ANSI C76.1-1964. In August of 1968, the ANSI C76.1 Committee decided to divide the standard into three parts. The first (ANSI C76.1) covers general requirements and test procedures, the second (ANSI C76.2) covers explicit ratings and dimensions, and the third (ANSI C76.3) covers the application guide.

ANSI C76.2-1977/IEEE Std 24-1977 incorporated changes that included

a) Adding dual current ratings for 115–196 kV insulation class bushings for transformers and circuit breakers

b) Adding voltage class ratings for 362–800 kV with wet switching impulse test values and coordination with switching surge sparkover values of arresters

c) Adding and updating acceptance limits for partial discharge, power factor, and capacitance

ANSI/IEEE Std 24-1984 incorporated revisions in Table 1 and Table 9 to make them compatible with the concept of IEEE Std 262B-1977.

IEEE Std C57.19.01-1991, sponsored by the IEEE Transformers Committee, incorporated changes to make it compatible with the new test procedures established by its companion standard, IEEE Std C57.19.00-1991. These changes included Table 9 and Table 10.

During the work on the latest revision, IEEE Std C57.19.01-2000, major changes have been incorporated. These changes were the result of feedback from the Edison Electric Institute (EEI), original equipment manufacturers (OEMs), and users. The ratings were standardized in an effort to create fewer ratings and reduce the need for large inventories of spare bushings, which have accumulated from decades of special designs. Bushings in inventory incur a large tax burden from accruing bushing costs in 2–5 y. In addition, the requirement for bushings for application on new bulk oil circuit breakers ceased because these breakers were no longer being produced. The working group reviewed this information and agreed to revise the standard to reduce the number of ratings, promote standardization, improve bushing characteristics for new transformers, and achieve overall cost improvements. This work has resulted in the reduction of designs/ratings from 56 to 21. These changes include the following:

— *Table 1, Electrical insulation characteristics.* The number of voltage classes has been reduced from 19 to 7 to cover the 34.5–765 kV voltage range. Voltage/insulation classes, which were a part of Table 1 in IEEE Std C57.19.01-1991, but not included in Table 1 of this standard, are included in Annex A to provide information on replacement bushings. The system voltage designation has been changed to indicate nominal rating in conformance with transformer standard IEEE Std C57.12.00-1993. The BIL rating for each voltage class is based on the highest BIL specified in IEEE Std C57.12.00-1993 for the same voltage class. A BIL of 2050 kV has been adopted for 756 kV rating. A column on creepage distance has been added to provide information on values corresponding to contaminated (heavy) environments as per IEEE Std C57.19.100-1995.

— *Table 2, Dimensions for bushings up to 69 kV.* Current ratings of 400/1200 A, 2000 A, 3000 A, and 5000 A have been standardized. A current transformer pocket length of 534 mm (21 in) has been standardized for these ratings. The bottom-end length has been standardized in each voltage class. The top terminal diameters have been standardized at 1.5 in for current up to 2000 A, 2 in for 3000 A, and 4 in for 5000 A rating. The bottom terminal configuration for ratings 2000 A and above have been changed from threaded stud to two- and four-hole bladed configurations similar to those in NEMA CC1-1993. Information on transformer and circuit breaker interchangeable (TBI) and

--`,,---,,,,,,,,,,---
Copyright © 2000 IEEE. All rights reserved.

Copyright The Institute of Electrical and Electronics Engineers, Inc.
Provided by IHS under license with IEEE
No reproduction or networking permitted without license from IHS
Not for Resale

breaker ratings has been taken out. The footnote on draw-lead application has been revised to define the current-carrying limit.

— *Table 3, Dimensions for bushings above 69 kV.* Current ratings of 800/1200 A, 2000 A, and 3000 A have been standardized. A current transformer pocket length of 584 mm (23 in) has been standardized for these ratings. The bottom-end length has been standardized in each voltage class. The "D" diameter for the 196/230 kV rating has been reduced. The top terminal diameters have been standardized at 1.5 in for current up to 2000 A, and 2 in for 3000 A rating. Dimensions for 500 kV and 765 kV ratings have been added. Information on TBI and breaker ratings has been taken out. The footnote on draw-lead application has been revised to define the current-carrying limit.

— *Table 4, Cantilever test requirements.* The table has been simplified and expanded to include information on bushings above 345 kV. The permanent deflection at the bottom end has been revised to reflect transformer bushings requirement. Information on TBI and breaker ratings has been taken out.

— *Table 5, Partial discharge limits.* The requirement at maximum L-G voltage has been taken out.

— *Table 6, Power factor and capacitance limits.* The limit for power factor for oil-impregnated, paper-insulated bushings has been lowered from 0.55% to 0.50%. Also, the power factor change limits for these bushings have been changed from +0.02/–0.06 to +0.02/–0.04.

— In addition, metric units have been adopted as primary units followed by inch-pound-based units in parentheses. Units/dimensions that are dependent upon inch-sized dies/tools have not been converted to metric units. Threads/inch and flange bolt hole diameters fall into this category.

— *Annex A, Electrical insulation characteristics.* This annex has been added to include the insulation characteristics for ratings, which were a part of IEEE Std C57.19.01-1991, but not included in Table 1 of this standard. This information has been provided for replacement purposes only.

At the time this standard was completed, the Working Group on Performance Characteristics and Dimensions for Outdoor Apparatus Bushings had the following membership:

Pritpal Singh, *Chair*

Michael S. Altman	N. Wayne Hansen	Mark Rivers
Oscar M. Bello	Robert H. Hartgrove	Heuk Ruevekomp
P. Bertolotto	Olof Heyman	Devki N. Sharma
Gene Blackburn	Tim Huff	Craig L. Stiegemeier
C. P. Caruso	Chungduck Ko	Robert W. Thompson
Florian Costa	Donald N. Laird	Subhash C. Tuli
D. D. L. Cruz	Jim E. Long	Loren B. Wagenaar
Fred E. Elliott*	Russell C. Nordman	Frank Wolfe
Keith P. Ellis	Jesse M. Patton	W. A. Young
Ronald Fox	Donald W. Platts	D. Zeng
Jens Frost	M. Rajadhyaksha	Peter Zhao

*Chair, Bushing Subcommittee

Copyright © 2000 IEEE. All rights reserved.
Copyright The Institute of Electrical and Electronics Engineers, Inc.
Provided by IHS under license with IEEE
No reproduction or networking permitted without license from IHS
Not for Resale

The following members of the balloting committee voted on this standard:

S. H. Aguirre
David Aho
Paul Ahrens
Ron L. Barker
Oscar M. Bello
Edward A. Bertolini
Wallace B. Binder
Thomas E. Blackburn, III
Alain Bolliger
William Carter
C. P. Caruso
B. Chiu
Thomas F. Clark
Jerry L. Corkran
Dieter Dohnal
Richard F. Dudley
Fred E. Elliott
Keith P. Ellis
Jeffrey M. Finn
Michael A. Franchek
Jens Frost
Doug M. Getson
Harry D. Gianakouros
Donald A. Gillies
Richard D. Graham
Robert L. Grubb
Robert L. Grunert
N. Wayne Hansen
Robert H. Hartgrove
R. R. Hayes
Keith R. Highton
Philip J. Hopkinson
James D. Huddleston, III
Bert R. Hughes
Rowland I. James
Charles W. Johnson
Lars-Erik Juhlin
Sheldon P. Kennedy
Chungduck Ko
Barin Kumar
Stephen R. Lambert
J. P. Lazar
Maurice Linker
Larry A. Lowdermilk
Donald L. Lowe
Joseph Ma
William A. Maguire
John W. Matthews
Nigel P. McQuin
Gary N. Miller
R. E. Minkwitz, Sr.
Harold R. Moore
R. J. Musil
Paul E. Orehek
B. K. Patel
Wesley F. Patterson
Jesse M. Patton
Paulette A. Payne
Linden W. Pierce
Paul Pillitteri
G. Preininger
Jeewan L. Puri
Frank Richens
Mark Rivers
John R. Rossetti
V. S. N. Sankar
Subhas Sarkar
Pat Scully
Dilipkumar Shah
Devki N. Sharma
Vic Shenoy
Hyeong Jin Sim
Pritpal Singh
James E. Smith
Ronald J. Stahara
Craig L. Stiegemeier
Ron W. Stoner
Thomas P. Traub
Subhash C. Tuli
John Tuohy
John Vandermaar
Robert A. Veitch
Loren B. Wagenaar
Barry H. Ward
William G. Wimmer
Frank Wolfe
W. A. Young
Peter Zhao

When the IEEE-SA Standards Board approved this standard on 30 January 2000, it had the following membership:

Richard J. Holleman, *Chair*
Donald N. Heirman, *Vice Chair*
Judith Gorman, *Secretary*

Satish K. Aggarwal
Dennis Bodson
Mark D. Bowman
James T. Carlo
Gary R. Engmann
Harold E. Epstein
Jay Forster*
Ruben D. Garzon
James H. Gurney
Lowell G. Johnson
Robert J. Kennelly
E. G. "Al" Kiener
Joseph L. Koepfinger*
L. Bruce McClung
Daleep C. Mohla
Robert F. Munzner
Louis-François Pau
Ronald C. Petersen
Gerald H. Peterson
John B. Posey
Gary S. Robinson
Akio Tojo
Hans E. Weinrich
Donald W. Zipse

*Member Emeritus

Also included is the following nonvoting IEEE-SA Standards Board liaison:

Robert E. Hebner

Yvette Ho Sang
IEEE Standards Project Editor

Copyright © 2000 IEEE. All rights reserved.

Copyright The Institute of Electrical and Electronics Engineers, Inc.
Provided by IHS under license with IEEE
No reproduction or networking permitted without license from IHS
Not for Resale

Contents

1. Scope 1

2. References 1

3. General requirements 2

4. Detailed requirements 2

Annex A (informative) Electrical insulation characteristics 11

Copyright © 2000 IEEE. All rights reserved.

Copyright The Institute of Electrical and Electronics Engineers, Inc.
Provided by IHS under license with IEEE
No reproduction or networking permitted without license from IHS

Not for Resale

IEEE Standard Performance Characteristics and Dimensions for Outdoor Apparatus Bushings

1. Scope

This standard covers electrical, dimensional, and related requirements for outdoor power apparatus bushings that have basic impulse insulation levels (BILs) of 200 kV and above. It provides specific values for dimensional and related requirements that are to be interpreted, measured, or tested in accordance with IEEE Std C57.19.00-1991. Bushings covered by this standard are intended for use as components of oil-filled transformers and reactors. For information on ratings not covered by this standard and for replacement bushings for oil circuit breakers, refer to IEEE Std C57.19.01-1991.

2. References

This standard shall be used in conjunction with the following publications. At the time of publication, the editions indicated were valid. Parties involved in agreements based on this standard are encouraged to investigate the possibility of applying the most recent editions of the reference standards available at the time of agreement.

IEEE Std C57.12.00-1993, IEEE Standard General Requirements for Liquid-Immersed Distribution, Power, and Regulating Transformers.[1]

IEEE Std C57.12.90-1999, IEEE Standard Test Code for Liquid-Immersed Distribution, Power, and Regulating Transformers.

IEEE Std C57.19.00-1991 (Reaff 1997), IEEE Standard General Requirements and Test Procedure for Outdoor Power Apparatus Bushings.

IEEE Std C57.19.100-1995 (Reaff 1997), IEEE Guide for Application of Power Apparatus Bushings.

At the time of publication of this standard, there were no equivalent dimensional standards in IEC 60137:1995-12, Standard for Insulating Bushings for Alternating Voltages Above 1000 V.[2]

---

[1]IEEE publications are available from the Institute of Electrical and Electronics Engineers, 445 Hoes Lane, P.O. Box 1331, Piscataway, NJ 08855-1331, USA (http://standards.ieee.org/).

[2]IEC publications are available from the Sales Department of the International Electrotechnical Commission, Case Postale 131, 3, rue de Varembé, CH-1211, Genève 20, Switzerland/Suisse (http://www.iec.ch/). IEC publications are also available in the United States from the Sales Department, American National Standards Institute, 11 West 42nd Street, 13th Floor, New York, NY 10036, USA (http://www.ansi.org/).

Copyright © 2000 IEEE. All rights reserved.

Copyright The Institute of Electrical and Electronics Engineers, Inc.
Provided by IHS under license with IEEE
No reproduction or networking permitted without license from IHS
Not for Resale

3. General requirements

Refer to IEEE Std C57.19.00-1991[3] for general requirements, definitions, and methods of measurements or tests applying to detailed requirements given in Clause 4.

4. Detailed requirements

Outdoor apparatus bushings conforming to this standard shall meet the requirements of the following as applicable:

a) Electrical insulation characteristics of Table 1

b) Dimensions of Figure 1, Table 2, and Table 3

c) Cantilever test values of Table 4

d) Partial discharge limits of Table 5

e) Power factor and capacitance limits of Table 6

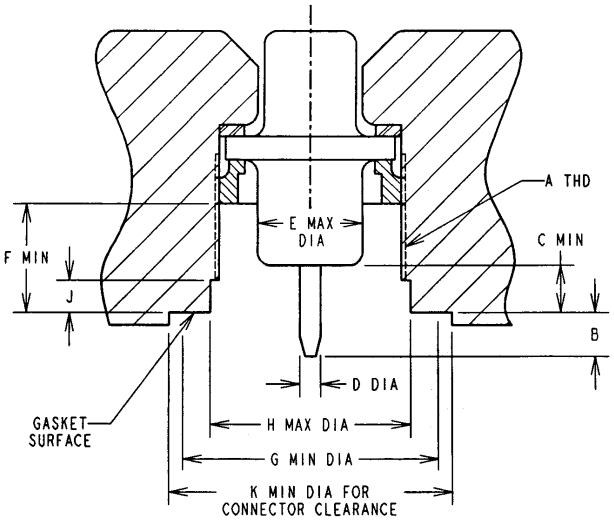

A. (2.25)-12 UNF 2B
B. 9.53 MIN - 19.05 MAX (0.375 MIN - 0.750 MAX)
C. 7.87 (0.310)
D. 7.95 ± 0.08 (0.313 ± 0.003)
E. 44.45 (1.75)
F. 25.4 (1.0)
G. 74.68 (2.94)
H. 57.56 ± 0.08 (2.266 ± 0.003)
J. 3.18 MIN - 7.37 MAX (0.125 MIN - 0.290 MAX)
K. 76.96 (3.030)

NOTE—PRIMARY UNITS FOR DIMENSIONS ARE IN MILLIMETERS FOLLOWED BY INCH UNITS IN PARENTHESES.

Figure 1—Bushing voltage tap dimensions
Type A: Normally grounded

[3]Information on references can be found in Clause 2.

Copyright © 2000 IEEE. All rights reserved.
Copyright The Institute of Electrical and Electronics Engineers, Inc.
Provided by IHS under license with IEEE
No reproduction or networking permitted without license from IHS
Not for Resale

Copyright © 2000 IEEE. All rights reserved.
Copyright The Institute of Electrical and Electronics Engineers, Inc.
Provided by IHS under license with IEEE
No reproduction or networking permitted without license from IHS
Not for Resale

Table 1—Electrical insulation characteristics for outdoor power apparatus bushings (nominal system voltage through 765 kV)

Basic lightning impulse insulation level (BIL) (kV)	Nominal system voltage (see Note 1) (kV)	Rated maximum line-to-ground voltage (kV)	Creepage distance light, contamination Minimum (see Note 2)		Creepage distance heavy, contamination Minimum (see Note 2)		Withstand tests				
							60 Hz		Lightning impulse		
			(mm)[a]	(in)	(mm)[a]	(in)	1 min dry rms (kV)	10 s wet rms (kV)	Full wave (kV)	Chopped wave crest minimum time to flashover 3 μs (kV)	Wet switching impulse (kV)
Col. 1	Col. 2	Col. 3	Col. 4		Col. 5		Col. 6	Col. 7	Col. 8	Col. 9	Col. 10
200	34.5	22	560	22	880	35	80	75	200	230	—
350	69	44	1 115	44	1 755	69	160	140	350	402	—
650	138	88	2 235	88	3 510	138	310	275	650	750	—
900	230	146	3 720	146	5 845	230	425	350	900	1 040	—
1 175	345	220	5 580	220	8 765	345	520	—	1 175	1 350	825
1 675	500	318	8 085	318	12 705	500	750	—	1 675	1 925	1 175
2 050	765	485	12 370	487	19 435	765	920	—	2 050	2 360	1 450

NOTES

1—The voltage levels in Col. 2 were selected from Table 5 of IEEE Std C57.12.00-1993.

2—The millimeter creepage values in Col. 4 and Col. 5 are based on 28 mm/kV (light) and 44 mm/kV (heavy) of nominal line-to-ground voltage as per IEEE Std C57.19.100-1995. For other creepage values, refer to IEEE Std C57.19.100-1995.

3—Dry negative switching impulse withstand voltage of the bushing must be at least equal to the switching impulse withstand voltage for the corresponding BIL specified in IEEE Std C57.12.00-1993.

[a]Primary units for dimensions are in millimeters.

Copyright The Institute of Electrical and Electronics Engineers, Inc.
Provided by IHS under license with IEEE
No reproduction or networking permitted without license from IHS
Not for Resale

Table 2—Dimensions of outdoor power apparatus bushings (nominal system voltage through 69 kV) (not applicable to circuit breakers)

Rating			Bottom end			Tube	Bottom terminal		Top terminal		Flange gasket space		Flange bolting details		
Nominal system voltage (kV)	Basic lightning impulse insulation level (BIL) (kV)	Rated continuous current (A)	Oil end length ±3 mm (±0.125 in) [mm (in)]	Current transformer pocket length and distance from flange mounting surface to minimum oil level [mm (in)]	Diameter from 25.4 mm (1 in) below the flange to lower end of bushing Maximum [mm (in)]	Inside tube diameter Minimum (in)	Lower terminal details or usable thread Minimum [mm (in)]	Thread class UNF-2A	Usable thread Minimum [mm (in)]	Thread class UNF-2A	Inside diameter Maximum [mm (in)]	Outside diameter Minimum [mm (in)]	No. of bolts	Hole size (in)	Bolt circle diameter [mm (in)]
			L	W	D		A	R	A	R	P	Q			
Col. 1	Col. 2	Col. 3	Col. 4	Col. 5	Col. 6	Col. 7	Col. 8	Col. 9	Col. 10	Col. 11	Col. 12	Col. 13	Col. 14	Col. 15	Col. 16
34.5	200	400[a]/1200	800 (31.5)	534 (21)	89 (3.5)	— (0.875)	54 (2.125)	— (1.5)-12	54 (2.125)	— (1.5)-12	102 (4.00)	159 (6.25)	4	— (0.875)	184.2 (7.25)
		2000[b]	851 (33.5)	534 (21)	102 (4.0)	—	Figure 2.4	—	64 (2.50)	— (1.5)-12	102 (4.00)	159 (6.25)	4	— (0.875)	184.2 (7.25)
		3000[b]	851 (33.5)	534 (21)	127 (5.0)	—	Figure 2.5	—	76 (3.00)	— (2.0)-12	159 (6.25)	210 (8.25)	6	— (0.875)	235.0 (9.25)
		5000[b]	851 (33.5)	534 (21)	219 (8.63)	—	Figure 2.5	—	102 (4.00)	— (4.0)-12	248 (9.75)	324 (12.75)	6	— (0.875)	362.0 (14.25)
69	350	400[a]/1200	952 (37.5)	534 (21)	134 (5.25)	— (0.875)	54 (2.125)	— (1.5)-12	54 (2.125)	— (1.5)-12	152 (6.00)	210 (8.25)	6	— (0.875)	235.0 (9.25)
		2000[b]	1003 (39.5)	534 (21)	140 (5.5)	—	Figure 2.4	—	64 (2.50)	— (1.5)-12	152 (6.00)	210 (8.25)	6	— (0.875)	235.0 (9.25)
		3000[b]	1003 (39.5)	534 (21)	165 (6.5)	—	Figure 2.5	—	76 (3.00)	— (2.0)-12	178 (7.00)	235 (9.25)	6	— (0.875)	260.4 (10.25)

NOTES

1—Letters shown in dimension column heading refer to the letters in Figure 2.1 through Figure 2.5.

2—When furnished, the oil gage and the test tap should be in line and midway between the adjacent flange mounting bolt holes.

[a]For draw-lead application, the continuous-current rating of the bushing is limited to the rating stated on the bushing nameplate. This bushing can be converted from draw-lead to bottom-end application with 1200 A rating.
[b]Not designed for use with draw lead.

Copyright © 2000 IEEE. All rights reserved.

Copyright The Institute of Electrical and Electronics Engineers, Inc.
Provided by IHS under license with IEEE
No reproduction or networking permitted without license from IHS
Copyright © 2000 IEEE. All rights reserved.
Not for Resale

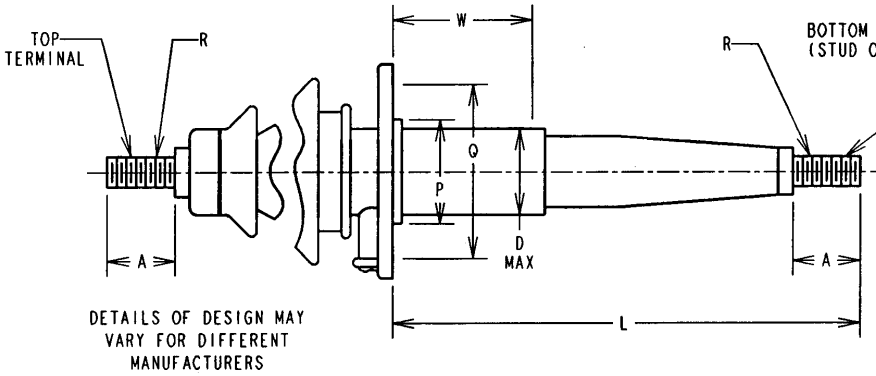

Figure 2.1—Bushing elevation

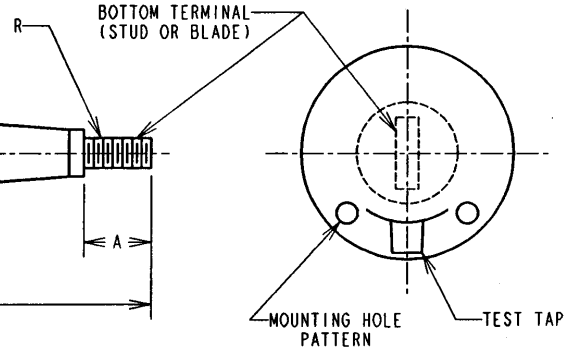

Figure 2.2—Relative locations of flange, test tap, and bottom terminal

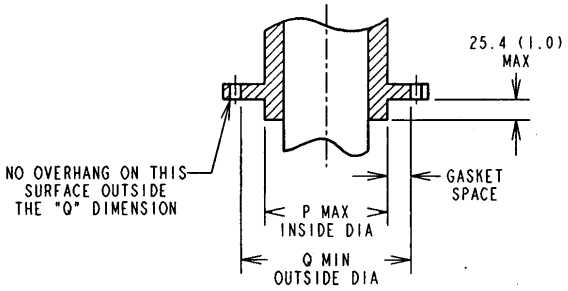

Figure 2.3—Flange

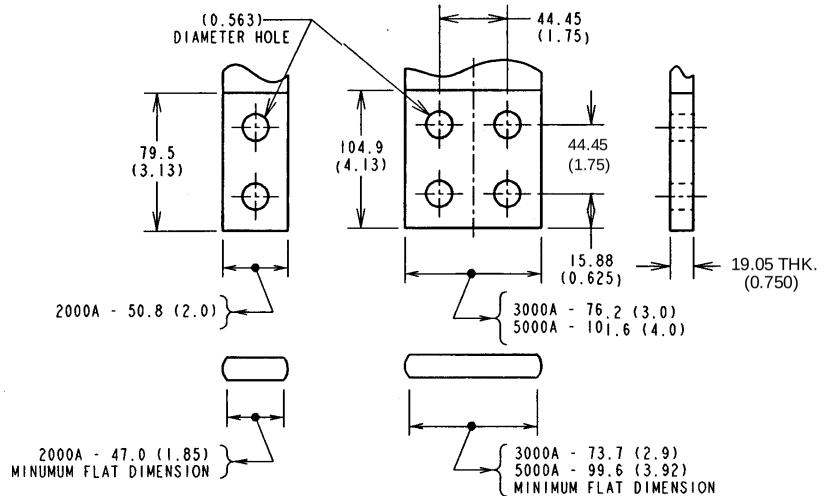

Figure 2.4—Bottom terminal

Figure 2.5—Bottom terminal

NOTE—PRIMARY UNITS FOR DIMENSIONS ARE IN MILLIMETERS FOLLOWED BY INCH UNITS IN PARENTHESES.

Figure 2—Figures illustrating dimensions in Table 2

Copyright The Institute of Electrical and Electronics Engineers, Inc.
Provided by IHS under license with IEEE
No reproduction or networking permitted without license from IHS
Not for Resale

Table 3—Dimensions of outdoor power apparatus bushings (nominal system voltage above 69 kV) (not applicable to circuit breakers)

Rating			Bottom end			Tube	Bottom terminal		Top terminal		Gasket space		Flange bolting details		
Nominal system voltage (kV)	Basic lightning impulse insulation level (BIL) (kV)	Rated continuous current (A)	Oil end length ±3 mm (±0.125 in) [mm (in)]	Current transformer pocket length and distance from flange mounting surface to minimum oil level [mm (in)]	Diameter from 25.4 mm (1 in) below the flange to lower end of bushing Maximum [mm (in)]	Inside tube diameter Minimum (in)	Terminal details	Washer diameter Maximum	Usable thread Minimum [mm (in)]	Thread class UNF-2A	Inside diameter Maximum [mm (in)]	Outside diameter Minimum [mm (in)]	No. of bolts	Hole size (in)	Bolt circle diameter [mm (in)]
			L	W	D			N	A	R	P	Q			
Col. 1	Col. 2	Col. 3	Col. 4	Col. 5	Col. 6	Col. 7	Col. 8	Col. 9	Col. 10	Col. 11	Col. 12	Col. 13	Col. 14	Col. 15	Col. 16
138	650	800[a]/1200	1188[b] (46.75)	584 (23)	248 (9.75)	— (1.625)	Figure 3.4	—	51 (2)	— (1.5)-12	276 (10.88)	327 (12.88)	6	— (1.25)	362 (14.25)
		2000[c]	1188 (46.75)	584 (23)	248 (9.75)	—	Figure 3.5	—	64 (2.5)	— (1.5)-12	276 (10.88)	327 (12.88)	6	— (1.25)	362 (14.25)
		3000[c]	1188 (46.75)	584 (23)	248 (9.75)	—	Figure 3.5	—	76 (3)	— (2.0)-12	276 (10.88)	327 (12.88)	6	— (1.25)	362 (14.25)
230	900	800[a]/1200	1276[b] (50.25)	584 (23)	305 (12)	— (1.625)	Figure 3.5	—	51 (2)	— (1.5)-12	435 (17.13)	495 (19.5)	12	— (1.25)	533.4 (21)
		2000[c]	1276 (50.25)	584 (23)	305 (12)	—	Figure 3.5	—	64 (2.5)	— (1.5)-12	435 (17.13)	495 (19.5)	12	— (1.25)	533.4 (21)
		3000[c]	1276 (50.25)	584 (23)	305 (12)	—	Figure 3.5	—	76 (3)	— (2.0)-12	435 (17.13)	495 (19.5)	12	— (1.25)	533.4 (21)
345	1175	800[a]/1200	1295 (51)	584 (23)	400 (15.75)	— (2)	Figure 3.6	210 (8.25)	51 (2)	— (1.5)-12	435 (17.13)	495 (19.5)	12	— (1.25)	533.4 (21)
		2000[c]	1295 (51)	584 (23)	400 (15.75)	—	Figure 3.6	210 (8.25)	64 (2.5)	— (1.5)-12	435 (17.13)	495 (19.5)	12	— (1.25)	533.4 (21)
		3000[c]	1295 (51)	584 (23)	400 (15.75)	—	Figure 3.6	210 (8.25)	76 (3)	— (2.0)-12	435 (17.13)	495 (19.5)	12	— (1.25)	533.4 (21)

NOTES

1—Letters shown in dimension column heading refer to the letters in Figure 3.1 through Figure 3.6.

2—When furnished, the oil gage and the voltage tap should be in line and midway between the adjacent flange mounting bolt holes and between the adjacent bottom terminal tapped holes.

Copyright © 2000 IEEE. All rights reserved.

Copyright The Institute of Electrical and Electronics Engineers, Inc.
Provided by IHS under license with IEEE
No reproduction or networking permitted without license from IHS
Copyright © 2000 IEEE. All rights reserved.
Not for Resale

Table 3—Dimensions of outdoor power apparatus bushings (nominal system voltage above 69 kV) (not applicable to circuit breakers) (continued)

Rating			Bottom end			Tube	Bottom terminal		Top terminal		Gasket space		Flange bolting details		
Nominal system voltage (kV)	Basic lightning impulse insulation level (BIL) (kV)	Rated continuous current (A)	Oil end length ±3 mm (±0.125 in) [mm (in)]	Current transformer pocket length and distance from flange mounting surface to minimum oil level [mm (in)]	Diameter from 25.4 mm (1 in) below the flange to lower end of bushing Maximum [mm (in)]	Inside tube diameter Minimum (in)	Terminal details	Washer diameter Maximum	Usable thread Minimum [mm (in)]	Thread class UNF-2A	Inside diameter Maximum [mm (in)]	Outside diameter Minimum [mm (in)]	No. of bolts	Hole size (in)	Bolt circle diameter [mm (in)]
			L	W	D			N	A	R	P	Q			
Col. 1	Col. 2	Col. 3	Col. 4	Col. 5	Col. 6	Col. 7	Col. 8	Col. 9	Col. 10	Col. 11	Col. 12	Col. 13	Col. 14	Col. 15	Col. 16
500	1675	800[a]/1200	1651 (65)	584 (23)	508 (20)	— (2)	Figure 3.6	305 (12)	51 (2)	— (1.5)-12	533 (21)	584 (23)	12	— (1.25)	635 (25)
		2000[c]	1651 (65)	584 (23)	508 (20)	—	Figure 3.6	305 (12)	64 (2.5)	— (1.5)-12	533 (21)	584 (23)	12	— (1.25)	635 (25)
		3000[c]	1651 (65)	584 (23)	508 (20)	—	Figure 3.6	305 (12)	76 (3)	— (2.0)-12	533 (21)	584 (23)	12	— (1.25)	635 (25)
765	2050	800[a]/1200	2159 (85)	584 (23)	749 (29.5)	— (2)	Figure 3.6	330 (13)	51 (2)	— (1.5)-12	749 (29.5)	854 (33.63)	16	— (1.25)	889 (35)
		2000[b]	2159 (85)	584 (23)	749 (29.5)	—	Figure 3.6	330 (13)	64 (2.5)	— (1.5)-12	749 (29.5)	854 (33.63)	16	— (1.25)	889 (35)

NOTES

1—Letters shown in dimension column heading refer to the letters in Figure 3.1 through Figure 3.6.

2—When furnished, the oil gage and the voltage tap should be in line and midway between the adjacent flange mounting bolt holes and between the adjacent bottom terminal tapped holes.

[a]For draw-lead application, the continuous-current rating of the bushing is limited to the rating stated on the bushing nameplate. This bushing can be converted from draw-lead to bottom-end application with 1200 A rating.
[b]With the addition of external shield, the “L” dimension may increase.
[c]Not designed for use with draw lead.

Copyright The Institute of Electrical and Electronics Engineers, Inc.
Provided by IHS under license with IEEE
No reproduction or networking permitted without license from IHS

Not for Resale

Copyright © 2000 IEEE. All rights reserved.

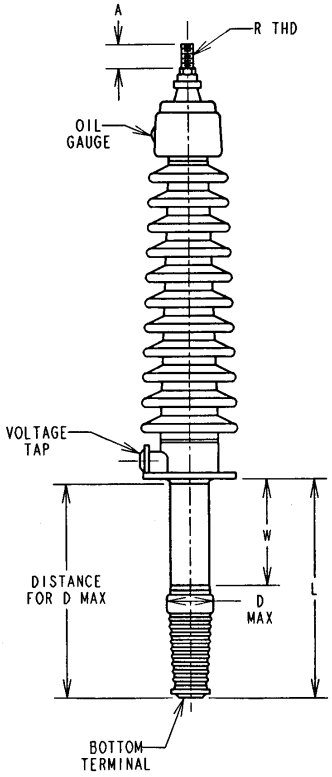

Figure 3.1—Bushing elevation

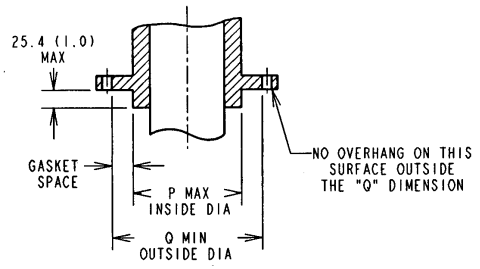

Figure 3.2—Flange

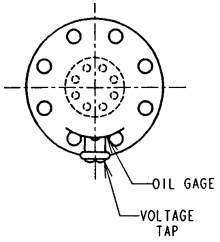

Figure 3.3—Relative locations of flange, oil gauge, voltage tap, and bottom terminal

NOTE—PRIMARY UNITS FOR DIMENSIONS ARE IN MILLIMETERS FOLLOWED BY INCH UNITS IN PARENTHESES.

Figure 3—Figures illustrating dimensions in Table 3

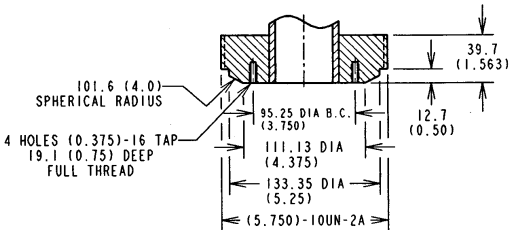

Figure 3.4—Bottom terminal

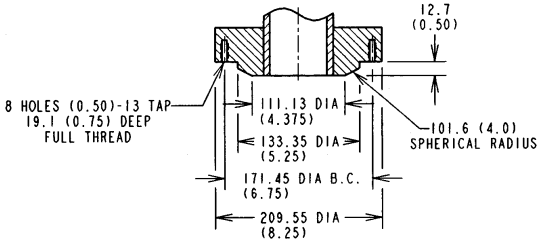

Figure 3.5—Bottom terminal

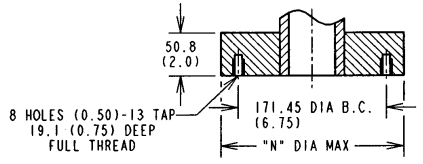

Figure 3.6—Bottom terminal

Table 4—Cantilever design test requirements for outdoor power apparatus bushings (not applicable to circuit breakers)

Rating		Transverse static force top and bottom	
Nominal system voltage (kV)	Rated continuous current (A)	(N)	(lbf)
Col. 1	Col. 2	Col. 3	Col. 4
34.5–69	Up to 2000	890	200
	3000	1300	300
	5000	2200	500
138	All	3100	700
230 and above	All	4000	900

NOTES

1—For draw-lead only bushings, no test is required for the bottom end.

2—The above values apply to bushings operated at inclinations up to 20° from the vertical. For angles greater than 20°, an equivalent force appearing at the top terminal due to the weight of the bushing should be added to the above values when testing the bushing in the vertical position.

3—The above values are design test requirements only and are not associated with permissible loads that can be applied to the top terminal during service. Refer to IEEE Std C57.19.100-1995 for additional information.

4—The permanent deflection measured at the bottom end 1 min after the removal of the force shall not exceed 1.52 mm (0.060 in).

Table 5—Partial discharge limits[a]

Type of construction[b]	At 1.5 times maximum L-G voltage[c] (pC or μV)
Oil-impregnated, paper-insulated	10
Resin-impregnated, paper-insulated	10
Resin-bonded, paper-insulated	100
Cast insulation	25
Solid	50[d]

[a]These limits include background corona. Since these measurements are related to partial discharges within the major insulation, external shielding may be used to reduce corona that may occur at the bushings terminals or the grounded projections.

[b]Refer to IEEE Std C57.19.00-1991 for definitions of the types of constructions. For application to power transformers that require partial discharge at 1.5 times maximum L-G voltage, bushings may be selected from appropriate types of constructions.

[c]The duration of 1.5 times maximum L-G voltage in the design test is 1 h. During this test, the partial discharge measurements shall be made at 5 min intervals. For the routine test, the same voltage shall be applied for a period long enough to make a stable partial discharge reading.

[d]Measured at 2 times maximum L-G voltage.

Copyright © 2000 IEEE. All rights reserved.

Copyright The Institute of Electrical and Electronics Engineers, Inc.
Provided by IHS under license with IEEE
No reproduction or networking permitted without license from IHS
Not for Resale

Table 6—C1 or C power factor and capacitance limits

Type of construction	C1 or C power factor and capacitance		
	Power factor[a]		Capacitance
	Limit (%)	Acceptable change [b]	Acceptable change (%)[c]
Col. 1	Col. 2	Col. 3	Col. 4
Oil-impregnated, paper-insulated	0.50	+0.02/–0.04	±1.0
Resin-impregnated, paper-insulated	0.85	±0.04	±1.0
Resin-bonded, paper-insulated	2.00	±0.08	±1.0
Cast insulation	1.00	±0.04	±1.0
Solid	N/A[d]	—	—

[a]Corrected to 20 °C.
[b]The algebraic difference in power factor (expressed in percent) measured at 10 kV or at the rated maximum L-G voltage before and after the dielectric withstand voltage test must be within the specified limits. For example, if the power factor of the oil-impregnated, paper-insulated bushing was 0.30% before the withstand test, the maximum acceptable power factor after the test would be 0.32%.
[c]The percent change in capacitance after the dielectric withstand test based on the initial value must be within the specified limits. The measurements are to be made at 10 kV or at rated maximum L-G voltage.
[d]There is no power factor limit for solid bushings, since the effect of stray capacitance and/or surface dielectric loss for low capacitance specimens (<100 pF) such as these can cause significant variations in the measured power factor. Tests on such bushings are usually rated on the basis of comparison of capacitance and ac dielectric loss between similar bushings, when tested at the same time and under similar conditions.

--`,,`-`-`,,`,,`,`,,`---
Copyright © 2000 IEEE. All rights reserved.
Copyright The Institute of Electrical and Electronics Engineers, Inc.
Provided by IHS under license with IEEE
No reproduction or networking permitted without license from IHS
Not for Resale

Annex A

(informative)

Electrical insulation characteristics

Table A.1 includes the electrical insulation characteristics for ratings that were a part of IEEE Std C57.19.01-1991, but which were not included in Table 1 of this standard. This information is provided for replacement purposes only.

Table A.1—Electrical insulation characteristics for outdoor apparatus bushings (nominal system voltage 15–800 kV) (for replacement purposes only)

Basic lightning impulse insulation level (BIL)	System voltage	Rated maximum line-to-ground voltage	Creepage distance minimum		Withstand tests					
					60 Hz		Lightning impulse			Wet switching impulse
					1 min dry rms	10 s wet rms	Full wave	Chopped wave crest minimum time to flashover		
								2 µs withstand	3 µs withstand	
(kV)	(kV)	(kV)	(mm)[a]	(in)	(kV)	(kV)	(kV)	(kV)	(kV)	(kV)
Col. 1	Col. 2	Col. 3	Col. 4		Col. 5	Col. 6	Col. 7	Col. 8	Col. 9	Col. 10
110	15	10	280	11	50	45	110	142	126	—
150	25	16	430	17	60	50	150	194	175	—
250	46	29	890	35	105	95	250	322	290	—
450	92TR[b]	73	1 680	66	185	155	450	—	520	—
550	115	88	2 010	79	260	230	550	710	632	—
650	138	102	2 340	92	310	275	650	838	750	—
750	161	102	2 900	114	365	315	750	968	865	—
750	161TR[b]	146	3 560	140	365	315	750	—	865	—
900	196	146	3 560	140	425	350	900	1 160	1 040	—
900	362	220	5 590	220	395	—	900	—	1 035	700
1 050	362	220	5 590	220	460	—	1 050	—	1 210	825
1 300	550	318	8 080	318	575	—	1 300	—	1 500	1 050
1 425	550	318	8 080	318	630	—	1 425	—	1 640	1 110
1 550	550	318	8 080	318	690	—	1 550	—	1 780	1 175
1 800	800	485	12 320	485	800	—	1 800	—	2 070	1 360

NOTES

1—Dry negative switching impulse withstand voltage of the bushing must be at least equal to the dry switching impulse withstand voltage for the corresponding BIL specified in IEEE Std C57.12.00-1993.

2—The above ratings are not a part of the main standard and are included in this annex for replacement purposes only.

[a]Primary units for dimensions are in millimeters.
[b]For reduced BIL transformers only.

Copyright © 2000 IEEE. All rights reserved.

Copyright The Institute of Electrical and Electronics Engineers, Inc.
Provided by IHS under license with IEEE
No reproduction or networking permitted without license from IHS
Not for Resale