Recognized as an
American National Standard (ANSI)

IEEE Std C57.15-1999
(Revision of
IEEE Std C57.15-1986)

IEEE Standard Requirements, Terminology, and Test Code for Step-Voltage Regulators

Sponsor

Transformers Committee
of the
IEEE Power Engineering Society

Approved 16 September 1999

IEEE-SA Standards Board

Abstract: Electrical, mechanical, and safety requirements of oil-filled, single- and three-phase voltage regulators not exceeding regulation of 2500 kVA (for three-phase units) or 833 kVA (for single-phase units) are covered.
Keywords: electrical, mechanical, safety, step-voltage regulators, test code

The Institute of Electrical and Electronics Engineers, Inc.
3 Park Avenue, New York, NY 10016-5997, USA

Copyright © 2000 by the Institute of Electrical and Electronics Engineers, Inc.
All rights reserved. Published 13 April 2000. Printed in the United States of America.

Print: ISBN 0-7381-1833-8 SH94799
PDF: ISBN 0-7381-1834-6 SS94799

No part of this publication may be reproduced in any form, in an electronic retrieval system or otherwise, without the prior written permission of the publisher.

Copyright The Institute of Electrical and Electronics Engineers, Inc.
Provided by IHS under license with IEEE
No reproduction or networking permitted without license from IHS
Not for Resale

IEEE Standards documents are developed within the IEEE Societies and the Standards Coordinating Committees of the IEEE Standards Association (IEEE-SA) Standards Board. Members of the committees serve voluntarily and without compensation. They are not necessarily members of the Institute. The standards developed within IEEE represent a consensus of the broad expertise on the subject within the Institute as well as those activities outside of IEEE that have expressed an interest in participating in the development of the standard.

Use of an IEEE Standard is wholly voluntary. The existence of an IEEE Standard does not imply that there are no other ways to produce, test, measure, purchase, market, or provide other goods and services related to the scope of the IEEE Standard. Furthermore, the viewpoint expressed at the time a standard is approved and issued is subject to change brought about through developments in the state of the art and comments received from users of the standard. Every IEEE Standard is subjected to review at least every five years for revision or reaffirmation. When a document is more than five years old and has not been reaffirmed, it is reasonable to conclude that its contents, although still of some value, do not wholly reflect the present state of the art. Users are cautioned to check to determine that they have the latest edition of any IEEE Standard.

Comments for revision of IEEE Standards are welcome from any interested party, regardless of membership affiliation with IEEE. Suggestions for changes in documents should be in the form of a proposed change of text, together with appropriate supporting comments.

Interpretations: Occasionally questions may arise regarding the meaning of portions of standards as they relate to specific applications. When the need for interpretations is brought to the attention of IEEE, the Institute will initiate action to prepare appropriate responses. Since IEEE Standards represent a consensus of all concerned interests, it is important to ensure that any interpretation has also received the concurrence of a balance of interests. For this reason, IEEE and the members of its societies and Standards Coordinating Committees are not able to provide an instant response to interpretation requests except in those cases where the matter has previously received formal consideration.

Comments on standards and requests for interpretations should be addressed to:

Secretary, IEEE-SA Standards Board
445 Hoes Lane
P.O. Box 1331
Piscataway, NJ 08855-1331
USA

Note: Attention is called to the possibility that implementation of this standard may require use of subject matter covered by patent rights. By publication of this standard, no position is taken with respect to the existence or validity of any patent rights in connection therewith. The IEEE shall not be responsible for identifying patents for which a license may be required by an IEEE standard or for conducting inquiries into the legal validity or scope of those patents that are brought to its attention.

Authorization to photocopy portions of any individual standard for internal or personal use is granted by the Institute of Electrical and Electronics Engineers, Inc., provided that the appropriate fee is paid to Copyright Clearance Center. To arrange for payment of licensing fee, please contact Copyright Clearance Center, Customer Service, 222 Rosewood Drive, Danvers, MA 01923 USA; (978) 750-8400. Permission to photocopy portions of any individual standard for educational classroom use can also be obtained through the Copyright Clearance Center.

Copyright The Institute of Electrical and Electronics Engineers, Inc.
Provided by IHS under license with IEEE
No reproduction or networking permitted without license from IHS
Not for Resale

Introduction

(This introduction is not part of IEEE Std C57.15-1999, IEEE Standard Requirements, Terminology, and Test Code for Step-Voltage Regulators.)

The working group has undertaken the task to update this standard to

a) Reflect the latest revisions of IEEE Std C57.12.00 and IEEE Std C57.12.90.

b) Permit the winding temperature rise to increase from 55 °C to 65 °C for selected regulator (sealed) designs.

c) Adapt the new IEEE approved format to ensure compatibility with the latest ISO and IEC standards.

d) Eliminate references to induction voltage and dry-type regulators.

e) Revise the list of standard sizes.

The working group membership for the preparation of this standard was as follows:

Craig A. Colopy, *Co-Chair*
Tom Diamantis, *Co-Chair*

Sam Aguirre	Robert Grunert	Sam Michael
Glenn Andersen	Ken Hanus	Tom Pekarek
Wallace Binder	James Harlow	Jerry Rowe
Jerry H. Bishop	Ron Jordan	Ron Stahara
Kevin Edwards	Mark Loveless	Ralph D. Wakeam

The following members of the balloting committee voted on this standard:

Sam Aguirre	Keith R. Highton	Larry C. Pearson
David Aho	Philip J. Hopkinson	Linden W. Pierce
Glenn Andersen	Bert R. Hughes	Paul. Pillitteri
Donald E. Ballard	Rowland I. James	R. Leon Plaster
Ron L. Barker	Gene Kallaur	John R. Rossetti
Mike Barnes	Egon Koenig	Subhas Sarkar
A. Bartek	Donald L. Lowe	Vic Shenoy
Martin Baur	William A. Maguire	Hyeong Jin Sim
Edward A. Bertolini	K. T. Massouda	Kenneth R. Skinger
Wallace Binder	John W. Matthews	Leonard R. Smith
Jerry H. Bishop	Nigel P. McQuin	James E. Smith
Alain Bolliger	Charles Patrick McShane	James E. Smith
Alvaro Cancino	Joe Melanson	Steven L. Snyder
Craig A. Colopy	Sam Michael	Craig L. Stiegemeier
Jerry L. Corkran	C. Kent Miller	Ron W. Stoner
Tom Diamantis	R. E. Minkwitz Sr.	Richard E. Sullivan
Dieter Dohnal	Daniel H. Mulkey	James A. Thompson
Carlos Gaytan	Paul E. Orehek	Thomas P. Traub
Harry D. Gianakouros	Gerald A. Paiva	Subhash C. Tuli
Robert Grunert	B. K. Patel	Joseph J. Vaschak
N. Wayne Hansen	Sanjay Y. Patel	Robert A. Veitch
James Harlow	Wesley F. Patterson	Barry H. Ward
Theodore J. Haupert	Paulette A. Payne	Christopher Wickersham
William R. Henning		B. Scott Wilson

Copyright © 2000 IEEE. All rights reserved.

Copyright The Institute of Electrical and Electronics Engineers, Inc.
Provided by IHS under license with IEEE
No reproduction or networking permitted without license from IHS
Not for Resale

When the IEEE-SA Standards Board approved this standard on 16 September 1999, it had the following membership:

Richard J. Holleman, *Chair*
Donald N. Heirman, *Vice Chair*
Judith Gorman, *Secretary*

Satish K. Aggarwal	James H. Gurney	Louis-François Pau
Dennis Bodson	Lowell G. Johnson	Ronald C. Petersen
Mark D. Bowman	Robert J. Kennelly	Gerald H. Peterson
James T. Carlo	E. G. "Al" Kiener	John B. Posey
Gary R. Engmann	Joseph L. Koepfinger*	Gary S. Robinson
Harold E. Epstein	L. Bruce McClung	Akio Tojo
Jay Forster*	Daleep C. Mohla	Hans E. Weinrich
Ruben D. Garzon	Robert F. Munzner	Donald W. Zipse

*Member Emeritus

Also included is the following nonvoting IEEE-SA Standards Board liaison:

Robert E. Hebner

Greg Kohn
IEEE Standards Project Editor

Copyright © 2000 IEEE. All rights reserved.
Copyright The Institute of Electrical and Electronics Engineers, Inc.
Provided by IHS under license with IEEE
No reproduction or networking permitted without license from IHS
Not for Resale

Contents

1. Overview 1

1.1 Scope 1
1.2 Purpose 1
1.3 Word usage 1

2. References 1

3. Definitions 2

4. Service conditions 7

4.1 Usual service conditions 7
4.2 Loading at other than rated conditions 7
4.3 Unusual service conditions 8
4.4 Frequency 9

5. Rating data 10

5.1 Cooling classes of regulators 10
5.2 Ratings in kVA 10
5.3 Operating voltage limits 11
5.4 Supplementary continuous-current ratings 11
5.5 Voltage supply ratios 11
5.6 Insulation levels 14
5.7 Losses 14
5.8 Short-circuit requirements 17
5.9 Tests 18

6. Construction 19

6.1 Bushings 19
6.2 Terminal markings 19
6.3 Diagram of connections 21
6.4 Nameplates 21
6.5 Tank construction 22
6.6 Tank grounding provisions 22
6.7 Components and accessories 22

7. Other requirements 23

7.1 Other supplementary continuous-current ratings 23
7.2 Other short-circuit capability 24
7.3 Other components and accessories 24

8. Test code 25

8.1 Resistance measurements 25
8.2 Polarity test 28
8.3 Ratio tests 29
8.4 No-load losses and excitation current 31

Copyright © 2000 IEEE. All rights reserved.

Copyright The Institute of Electrical and Electronics Engineers, Inc.
Provided by IHS under license with IEEE
No reproduction or networking permitted without license from IHS
Not for Resale

8.5 Impedance and load losses 36
8.6 Dielectric tests 41
8.7 Temperature rise 52
8.8 Short-circuit tests 58
8.9 Data 62

9. Control systems 65

9.1 General 65
9.2 Control device construction 65
9.3 Control system requirements 66
9.4 Tests 68

Annex A (informative) Unusual temperature and altitude conditions 71

Annex B (informative) Bushing and field dielectric tests 73

Annex C (informative) Bibliography 74

Copyright © 2000 IEEE. All rights reserved.

Copyright The Institute of Electrical and Electronics Engineers, Inc.
Provided by IHS under license with IEEE
No reproduction or networking permitted without license from IHS
Not for Resale

IEEE Standard Requirements, Terminology, and Test Code for Step-Voltage Regulators

1. Overview

1.1 Scope

This standard describes electrical, mechanical, and safety requirements of oil-filled, single- and three-phase step-voltage regulators not exceeding a regulation of 2500 kVA (for three-phase units) or 833 kVA (for single-phase units). This standard does not apply to load tap-changing transformers.

1.2 Purpose

This standard is intended as a basis for the establishment of performance, limited electrical and mechanical interchangeability, and safety requirements of equipment described. It also assists in the proper selection of such equipment.

1.3 Word usage

When this document is used on a mandatory basis, the word *shall* indicates mandatory requirements; and the words *should* or *may* refer to matters that are recommended or permissive, but not mandatory.

2. References

This standard shall be used in conjunction with the following publications. When the following standards are superseded by an approved revision, the revision shall apply.

ANSI C57.12.20-1997, American National Standard for Transformers—Standard for Overhead Type Distribution Transformers, 500 kVA and Smaller: High Voltage, 34 500 Volts and Below; Low Voltage, 7970/13 800 Y Volts and Below.[1]

[1]ANSI C57.12.20-1997 is available from the Institute of Electrical and Electronics Engineers, 445 Hoes Lane, P.O. Box 1331, Piscataway, NJ 08855-1331, USA (http://standards.ieee.org/).

Copyright © 2000 IEEE. All rights reserved.

Copyright The Institute of Electrical and Electronics Engineers, Inc.
Provided by IHS under license with IEEE
No reproduction or networking permitted without license from IHS
Not for Resale

ANSI C84.1-1995, American National Standard Voltage Ratings (60 Hz) for Electric Power Systems and Equipment.[2]

IEEE Std 4-1995, IEEE Standard Techniques for High-Voltage Testing.[3]

IEEE Std 315-1975 (Reaff 1993), IEEE Standard Graphic Symbols for Electrical and Electronics Diagrams (Including Reference Designation Letters).

IEEE Std C37.90.1-1989 (Reaff 1994), IEEE Standard Surge Withstand Capability (SWC) Tests for Protective Relays and Relay Systems.

IEEE Std C57.12.00-1993, IEEE Standard General Requirements for Liquid-Immersed Distribution, Power, and Regulating Transformers.

IEEE Std C57.12.80-1978 (Reaff 1992), IEEE Standard Terminology for Power and Distribution Transformers.

IEEE Std C57.12.90-1999, IEEE Standard Test Code for Liquid-Immersed Distribution, Power, and Regulating Transformers.

IEEE Std C57.13-1993, IEEE Standard Requirements for Instrument Transformers.

IEEE Std C57.19.00-1991 (Reaff 1997), IEEE Standard General Requirements and Test Procedure for Outdoor Power Apparatus Bushings.

IEEE Std C57.95-1984 (Reaff 1991), IEEE Guide for Loading Liquid-Immersed, Step-Voltage and Induction-Voltage Regulators (withdrawn).[4]

IEEE Std C57.98-1993, IEEE Guide for Transformer Impulse Tests.

IEEE Std C57.106-1991, IEEE Guide for Acceptance and Maintenance of Insulating Oil in Equipment (withdrawn).[5]

3. Definitions

For the purposes of this standard, the following terms and definitions apply. IEEE Std C57.12.80-1978[6] and The IEEE Standards Dictionary of Electrical and Electronics Terms [B7][7] should be referenced for terms not defined in this clause.

3.1 ambient temperature: The temperature of the medium, such as air or water, into which the heat generated in the equipment is dissipated.

3.2 angular displacement of polyphase regulator: (A) The time angle, expressed in degrees, between the line-to-neutral voltage of the reference identified source voltage terminal S_1 and the line-to-neutral voltage

[2]ANSI publications are available from the Sales Department, American National Standards Institute, 11 West 42nd Street, 13th Floor, New York, NY 10036, USA (http://www.ansi.org/).

[3]IEEE publications are available from the Institute of Electrical and Electronics Engineers, 445 Hoes Lane, P.O. Box 1331, Piscataway, NJ 08855-1331, USA (http://standards.ieee.org/).

[4]IEEE Std C57.95-1984 has been withdrawn; however, copies can be obtained from Global Engineering, 15 Inverness Way East, Englewood, CO 80112-5704, USA, tel. (303) 792-2181 (http://www.global.ihs.com/).

[5]IEEE Std C57.106-1991 has been withdrawn; however, copies can be obtained from Global Engineering.

[6]Information on references can be found in Clause 2.

[7]The numbers in brackets correspond to those of the bibliography in Annex C.

Copyright © 2000 IEEE. All rights reserved.
Copyright The Institute of Electrical and Electronics Engineers, Inc.
Provided by IHS under license with IEEE
No reproduction or networking permitted without license from IHS
Not for Resale

of the corresponding identified load voltage terminal L_1. **(B)** The connection and arrangement of terminal markings for three-phase regulators in a wye connection has an angular displacement of zero degrees. **(C)** The connection and arrangement of terminal markings for three-phase regulators in a delta connection has an angular displacement of zero degrees when the regulator is on the neutral tap position. When the regulator is on a tap position other than neutral, the angular displacement will be other than zero degrees. The angular displacement with the regulator connected in delta will be less than ±5° for a ±10% range of regulation.

3.3 autotransformer: A transformer in which part of one winding is common to both the primary and the secondary circuits associated with that winding.

3.4 common winding: That part of the autotransformer winding that is common to both the primary and secondary circuits. *Syn:* **shunt winding.**

3.5 conservator system: An oil preservation system in which the oil in the main tank is sealed from the atmosphere, over the temperature range specified, by means of an ancillary tank partly filled with oil and connected to the completely filled main tank. *Syn:* **expansion tank system.**

3.6 dielectric tests: Tests that consist of the application of a voltage higher than the rated voltage for a specified time for the purpose of determining the adequacy of insulating materials against breakdown, and for spacing under normal conditions.

3.7 excitation current: The current that maintains the excitation of the regulator. It may be expressed in amperes, per unit, or percent of the rated current of the regulator.

3.8 excitation losses: *See:* **no-load losses.**

3.9 expansion tank system: *See:* **conservator system.**

3.10 gas-oil sealed system: An oil preservation system in which the interior of the tank is sealed from the atmosphere, over the temperature range specified, by means of an ancillary tank or tanks to form a gas-oil seal operating on the manometer principle.

3.11 impedance voltage drop: The phasor sum of the resistance voltage drop and the reactance voltage drop. For regulators, the resistance drop, the reactance drop, and the impedance drop are, respectively, the sum of the primary and secondary drops reduced to the same terms. They are usually expressed in per unit or percent of the rated voltage of the regulator. Since they differ at different operating positions of the regulator, two values of impedance shall be considered, in practice, to be the tap positions that result in the minimum and the maximum impedance. Neutral position has the minimum amount of impedance.

3.12 impedance voltage of a regulator: The voltage required to circulate rated current through one winding of the regulator when another winding is short-circuited, with the respective windings connected as for a rated voltage operation. Impedance voltage is usually referred to the series winding, and then that voltage is expressed in per unit, or percent, of the rated voltage of the regulator.

3.13 indoor regulator: A regulator that, because of its construction, must be protected from the weather.

3.14 line-drop compensator: A device that causes the voltage regulating device to vary the output voltage an amount that compensates for the impedance voltage drop in the circuit between the regulator and a predetermined location on the circuit (sometimes referred to as the load center).

3.15 liquid: Refers to both synthetic fluids and mineral transformer oil.

NOTE—Some synthetic fluids may be unsuitable for use in the arcing environment of a step-voltage regulator.

Copyright © 2000 IEEE. All rights reserved.

Copyright The Institute of Electrical and Electronics Engineers, Inc.
Provided by IHS under license with IEEE
No reproduction or networking permitted without license from IHS
Not for Resale

3.16 liquid-immersed regulator: A regulator in which the core and coils are immersed in an insulating liquid.

3.17 liquid-immersed self-cooled (Class ONAN): A regulator having its core and coil immersed in a liquid and cooled by the natural circulation of air over the cooling surfaces.

3.18 liquid-immersed self-cooled/forced-air-cooled (Classes ONAN/ONAF and ONAN/ONAF/ONAF): A regulator having its core and coils immersed in liquid and having a self-cooled rating with cooling obtained by the natural circulation of air over the cooling surface and a forced-air-cooled rating with cooling obtained by the forced circulation of air over this same cooling surface.

3.19 liquid-immersed self-cooled/forced-air-cooled/forced-liquid-cooled (Class ONAN/ONAF/OFAF): A regulator having its core and coils immersed in liquid and having a self-cooled rating with cooling obtained by the natural circulation of air over the cooling surface; a forced-air-cooled rating with cooling obtained by the forced circulation of air over this same air cooling surface; and a forced-liquid-cooled rating with cooling obtained by the forced circulation of liquid over the core and coils and adjacent to this same cooling surface over which the cooling air is being forced-circulated.

3.20 liquid-immersed water-cooled (Class ONWF): A regulator having its core and coils immersed in a liquid and cooled by the natural circulation of the liquid over the water-cooled surface.

3.21 liquid-immersed water-cooled/self-cooled (Class ONWF/ONAN): A regulator having its core and coils immersed in liquid and having a water-cooled rating with cooling obtained by the natural circulation of liquid over the water-cooled surface, and a self-cooled rating with cooling obtained by the natural circulation of air over the air-cooled surface.

3.22 load losses of a regulator: Those losses that are incident to the carrying of the load. Load losses include I^2R loss in the windings due to load current, stray loss due to stray fluxes in the windings, core clamps, and so forth.

3.23 no-load losses: Those losses that are incident to the excitation of the regulator. No-load losses include core loss, dielectric loss, conductor loss in the winding due to exciting current, and conductor loss due to circulating current in parallel windings. These losses change with the excitation voltage. *Syn:* **excitation losses.**

3.24 nominal system voltage: A nominal value assigned to a system or circuit of a given voltage for the purpose of convenient designation. The term nominal voltage designates the line-to-line voltage, as distinguished from the line-to-neutral voltage. It applies to all parts of the system or circuit.

3.25 nonsealed system: A system in which a tank or compartment is vented to the atmosphere usually with two breather openings to permit circulation of air across the gas space above the oil. Circulation can be made unidirectional when a pipe is extended up through the oil and is heated by the oil to induce movement of air drawn from the outside into the gas space and across the oil to a breather on top of the tank.

3.26 outdoor regulator: A regulator designed for use outside of buildings.

3.27 polarity: (A) The polarity of a regulator is intrinsic in its design. Polarity is correct if the regulator boosts the voltage in the “raise” range and bucks the voltage in the “lower” range. The relative polarity of the shunt winding and the series windings of a step-voltage regulator will differ in the boost and buck modes between Type A and Type B regulators. **(B)** The relative instantaneous polarity of the main transformer windings, instrument transformer(s), and utility winding(s), as applicable, will be designated by an appropriate polarity mark on the diagram of connection on the nameplate, in accordance with 6.3 of IEEE Std C57.15-1999.

Copyright © 2000 IEEE. All rights reserved.
Copyright The Institute of Electrical and Electronics Engineers, Inc.
Provided by IHS under license with IEEE
No reproduction or networking permitted without license from IHS
Not for Resale

3.28 pole-type regulator: A regulator that is designed for mounting on a pole or similar structure.

3.29 primary circuit: The circuit on the input side of the regulator.

3.30 rated range of regulation of a voltage regulator: The amount that the regulator will raise or lower its rated voltage. The rated range may be expressed in per unit, or in percent, of rated voltage; or it may be expressed in kilovolts.

3.31 rated voltage (of equipment): The voltage to which operating and performance characteristics are referred.

3.32 rated voltage of a step-voltage regulator: The voltage for which the regulator is designed and on which performance characteristics are based.

3.33 rated voltage of a winding: The rated voltage of a winding is the voltage to which operating and performance characteristics are referred.

3.34 rated voltage of the series winding of a step-voltage regulator: The voltage between terminals of the series winding, with rated voltage applied to the regulator, when the regulator is in the position that results in maximum voltage change and is delivering rated output at 80% lagging power factor.

3.35 rating in kVA of a voltage regulator: (A) The rating that is the product of the rated load amperes and the rated "raise" or "lower" range of regulation in kilovolts (kV). If the rated raise and lower range of regulation are unequal, the larger shall be used in determining the rating in kVA. **(B)** The rating in kVA of a three-phase voltage regulator is the product of the rated load amperes and the rated range of regulation in kilovolts multiplied by 1.732.

3.36 reactance voltage drop: The component of the impedance voltage in quadrature with the current.

3.37 regulated circuit: The circuit on the output side of the regulator, where it is desired to control the voltage, or the phase relation, or both. The voltage may be held constant at any selected point on the regulated circuit.

3.38 resistance method of temperature determination: The determination of the temperature by comparison of the resistance of a winding at the temperature to be determined with the resistance at a known temperature.

3.39 resistance voltage drop: The component of the impedance voltage in phase with the current.

3.40 sealed tank system: A method of oil preservation in which the interior of the tank is sealed from the atmosphere and in which the gas volume plus the oil volume remains constant. The regulator shall remain effectively sealed for top oil temperature range of –5 °C to 105 °C, continuous, and under the operating conditions described in IEEE Std C57.95-1984.

3.41 series winding: That portion of the autotransformer winding that is not common to both the primary and secondary circuits, but is connected in series between the input and output circuits.

3.42 shunt winding: *See:* **common winding.**

3.43 station-type regulator: A regulator designed for ground-type installations in stations or substations.

3.44 step-voltage regulator (transformer type): An induction device having one or more windings in shunt with, and excited from, the primary circuit, and having one or more windings in series between the primary

Copyright © 2000 IEEE. All rights reserved.

Copyright The Institute of Electrical and Electronics Engineers, Inc.
Provided by IHS under license with IEEE
No reproduction or networking permitted without license from IHS Not for Resale

circuit and the regulated circuit, all suitably adapted and arranged for the control of the voltage, or of the phase angle, or of both, of the regulated circuit in steps by means of taps without interrupting the load.

3.45 tap: A connection brought out of a winding at some point between its extremities to permit the changing of the voltage ratio.

3.46 thermometer method of temperature determination: This method consists of the determination of the temperature by thermocouple or suitable thermometer, with either being applied to the hottest accessible part of the equipment.

3.47 total losses: Those losses that are the sum of the no-load losses and the load losses. Power required for cooling fans, oil pumps, space heaters, and other ancillary equipment is not included in the total loss. When specified, loss data on such ancillary equipment shall be furnished.

3.48 Type A step-voltage regulator: A step-voltage regulator in which the primary circuit is connected directly to the shunt winding of the regulator. The series winding is connected to the shunt winding and, in turn, via taps, to the regulated circuit, per Figure 1. In a Type A step-voltage regulator, the core excitation varies because the shunt winding is connected across the primary circuit.

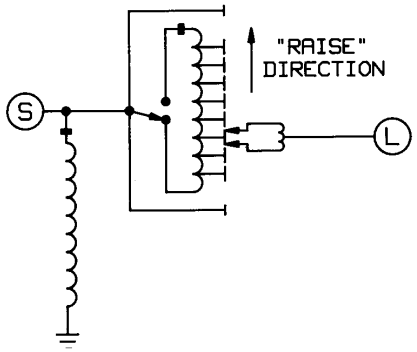

Figure 1—Schematic diagram of single-phase, Type A step-voltage regulator

3.49 Type B step-voltage regulator: A step-voltage regulator in which the primary circuit is connected, via taps, to the series winding of the regulator. The series winding is connected to the shunt winding, which is connected directly to the regulated circuit, per Figure 2. In a Type B step-voltage regulator, the core excitation is constant because the shunt winding is connected across the regulated circuit.

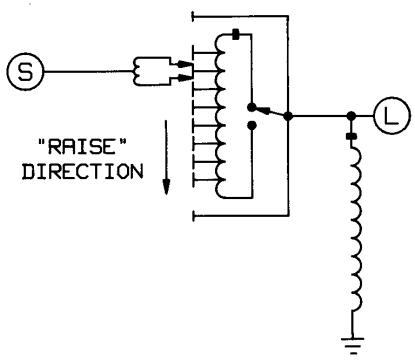

Figure 2—Schematic diagram of single-phase, Type B step-voltage regulator

3.50 voltage regulating device: A voltage sensitive device that is used on an automatically operated voltage regulator to control the voltage of the regulated circuit.

Copyright © 2000 IEEE. All rights reserved.
Copyright The Institute of Electrical and Electronics Engineers, Inc.
Provided by IHS under license with IEEE
No reproduction or networking permitted without license from IHS
Not for Resale

4. Service conditions

4.1 Usual service conditions

Apparatus conforming to this standard shall be suitable for operation at rated kilovolt-amperes under the service conditions given in 4.1.1 through 4.1.6.

4.1.1 Temperature

a) If air-cooled, the temperature of the cooling air (ambient temperature) does not exceed 40 °C, and the average temperature of the cooling air for any 24 h period does not exceed 30 °C.

b) If water-cooled, the temperature of the cooling water (ambient temperature) does not exceed 30 °C, and the average temperature of the cooling water for any 24 h period does not exceed 25 °C. (Minimum water temperature shall not be lower than 1 °C, unless the cooling water includes anti-freeze suitable for –20 °C operation.)

c) The top-liquid temperature of the regulator (when operating) shall not be lower than –20 °C. (Starting temperatures below –20 °C are not considered as usual service conditions.)

4.1.2 Altitude

The altitude does not exceed 1000 m (3300 ft).

4.1.3 Supply voltage

The supply voltage wave shape shall be approximately sinusoidal, and the phase voltages supplying a poly-phase regulator shall be approximately equal in magnitude and time displacement.

4.1.4 Load current

The load current shall be approximately sinusoidal. The harmonic factor shall not exceed 0.05 per unit. *Harmonic factor* is defined IEEE Std C57.12.80-1978.

4.1.5 Outdoor operation

Unless otherwise specified, regulators shall be suitable for outdoor operation.

4.1.6 Tank or enclosure finish

Temperature limits and tests shall be based on the use of a nonmetallic pigment surface paint finish.

NOTE—Metallic flake paints, such as aluminum, zinc, and so forth, have properties that increase the temperature rise of regulators, except in direct sunlight.

4.2 Loading at other than rated conditions

IEEE Std C57.95-1984 provides guidance for loading at other than rated conditions including

a) Ambient temperatures higher or lower than the basis of rating.
b) Short-time loading in excess of nameplate kVA with normal life expectancy.
c) Loading that results in reduced life expectancy.

Copyright © 2000 IEEE. All rights reserved.

Copyright The Institute of Electrical and Electronics Engineers, Inc.
Provided by IHS under license with IEEE
No reproduction or networking permitted without license from IHS
Not for Resale

NOTE—IEEE Std C57.95-1984 is a guide rather than a standard. It provides the best known general information for the loading of regulators under various conditions based on typical winding insulation systems, and is based upon the best engineering information available at the time of preparation. The guide discusses limitations of ancillary components other than windings that may limit the capability of regulators. When specified, ancillary components and other construction features (cables, bushings, tap changers, oil expansion space, etc.) shall be supplied such that they in themselves will not limit the loading to less than the capability of the windings.

4.3 Unusual service conditions

Conditions other than those described in 4.1 are considered unusual service and, when present, should be brought to the attention of those responsible for the design and application of the apparatus. Examples of some of these conditions are discussed in 4.3.1 through 4.3.3.

4.3.1 Unusual temperature and altitude conditions

Regulators may be used at higher or lower ambient temperatures or at higher altitudes than specified in 4.1, but special consideration must be given to these applications. Annex A and IEEE Std C57.95-1984 provide information on recommended practices.

4.3.2 Insulation at high altitude

The dielectric strength of regulators that depend in whole or in part upon air for insulation decreases as the altitude increases due to the effect of decreased air density. When specified, regulators shall be designed with a larger air spacing, using the correction factors of Table 1, to obtain adequate air dielectric strength at altitudes above 1000 m (3300 ft).

a) The insulation level at 1000 m (3300 ft) multiplied by the correction factor from Table 1 must not be less than the required insulation level at the required altitude.
b) Bushings with additional length of creep distance shall be furnished where necessary for operation above 1000 m (3300 ft).

Table 1—Dielectric strength correction factors for altitudes greater than 1000 m (3300 ft)

Altitude		Altitude correction factor for dielectric strength
(m)	(ft)	
1000	3300	1.00
1200	4000	0.98
1500	5000	0.95
1800	6000	0.92
2100	7000	0.89
2400	8000	0.86
2700	9000	0.83
3000	10 000	0.80
3600	12 000	0.75
4200	14 000	0.70
4500	15 000	0.67

Copyright © 2000 IEEE. All rights reserved.
Copyright The Institute of Electrical and Electronics Engineers, Inc.
Provided by IHS under license with IEEE
No reproduction or networking permitted without license from IHS
Not for Resale

4.3.3 Other unusual service conditions

Other unusual service conditions include the following:

a) Damaging fumes or vapors, excessive or abrasive dust, explosive mixtures of dust or gases, steam, salt spray, excessive moisture or dripping water, etc.
b) Abnormal vibration, tilting, shock, or seismic conditions.
c) Ambient temperatures outside of normal range.
d) Unusual transportation or storage conditions.
e) Unusual space limitations.
f) Unusual maintenance problems.
g) Unusual duty or frequency of operation, impact loading.
h) Unbalanced alternating-current (ac) voltages or departure of ac systems voltages from a substantially sinusoidal wave form.
i) Loads involving abnormal harmonic currents, such as those that may result where appreciable load currents are controlled by solid-state or similar devices; such harmonic currents may cause excessive losses and abnormal heating.
j) Specified loading conditions (kVA outputs and power factors) associated with multiwinding transformers or autotransformers.
k) Excitation exceeding either 110% rated voltage or 110% rated V/Hz.
l) Planned short circuits as a part of regulator operating or relaying practice.
m) Unusual short-circuit application conditions differing from those described as usual in 5.8.
n) Unusual voltage conditions, including transient overvoltages, resonance, switching surges, etc., that may require special consideration in insulation design.
o) Unusually strong magnetic fields.

   NOTE—Solar magnetic disturbances may result in the flow of telluric currents in regulator neutrals.

p) Unusually high nuclear radiation.
q) Parallel operation.

   NOTE—While parallel operation is not unusual, it is desirable that users advise the manufacturer if paralleling with other regulators is planned, and the characteristics of the transformers or reactors so involved.

r) Direct current circulating within the regulator.

4.3.3.1 Voltage regulating device

The voltage regulating device, depending on its construction, may be sensitive to altitude considerations. The manufacturer should be consulted where applications exceed 2000 m (6600 ft). Altitude of 4500 m (15 000 ft) is considered a maximum for standard regulators. Dielectric strength correction factors for altitudes greater than 1000 m (3300 ft) are shown in Table 1.

4.4 Frequency

Unless otherwise specified, regulators shall be designed for operation at a frequency of 60 Hz.

Copyright © 2000 IEEE. All rights reserved.

Copyright The Institute of Electrical and Electronics Engineers, Inc.
Provided by IHS under license with IEEE
No reproduction or networking permitted without license from IHS
Not for Resale

5. Rating data

5.1 Cooling classes of regulators

5.1.1 Liquid-immersed air-cooled

a) Liquid-immersed self-cooled (Class ONAN)
b) Liquid-immersed self-cooled/forced-air-cooled (Class ONAN/ONAF)

5.1.2 Liquid-immersed water-cooled

a) Liquid-immersed water-cooled (Class ONWF)
b) Liquid-immersed water-cooled/self-cooled (Class ONWF/ONAN)

5.2 Ratings in kVA

Ratings (in kVA) for step-voltage regulators are continuous and based on not exceeding the temperature limits covered in Table 2.

Ratings (in kVA) covered by this standard shall be expressed in the terms given in 5.2.1 and as specified in 5.2.2.

Table 2—Limits of temperature rise

Item	Type of apparatus[a]	Winding temperature rise by resistance (°C)	Hottest-spot winding temperature rise (°C)
1	55 °C rise liquid immersed (vented or sealed tank)	55	65
	65 °C rise liquid immersed (sealed tank)	65	80
2	Metallic parts in contact with or adjacent to the insulation shall not attain a temperature in excess of that allowed for the hottest spot of the windings adjacent to that insulation.		
3	Metallic parts other than those covered in item 2 shall not attain excessive temperature rises.		
4	Where a regulator is provided with a sealed-tank, conservator, or gas-oil-seal system, the temperature rise of the insulating oil shall not exceed 55 °C (55 °C rise unit) or 65 °C (65 °C rise unit) when measured near the surface of the oil. The temperature rise of insulating oil in regulator not provided with the oil preservation systems listed above shall not exceed 50 °C when measured near the exposed surface of the oil.		

[a]Apparatus with specified temperature rise shall have an insulation system that has been proven by experience, general acceptance, or an accepted test.

5.2.1 Terms in which rating is expressed

The rating of a step-voltage regulator shall be expressed in the following terms:

a) kVA
b) Number of phases
c) Frequency
d) Voltage
e) Current
f) Voltage range in percent (raise and lower)

Copyright © 2000 IEEE. All rights reserved.
Copyright The Institute of Electrical and Electronics Engineers, Inc.
Provided by IHS under license with IEEE
No reproduction or networking permitted without license from IHS
Not for Resale

Regulators shall be approximately compensated for their internal regulation to provide the specified voltage range at rating in kVA and with an 80% lagging power factor load.

5.2.2 Preferred kVA ratings

Preferred ratings of step-voltage regulators shall be based on operation at a frequency of 60 Hz and a voltage range of 10% raise and 10% lower, as given in Table 3 and Table 4. .

5.2.3 Supplementary kVA ratings

In addition to their normal ratings, as defined in 5.2.2, regulators shall deliver rated kVA output without exceeding the specified temperature rise at the operating voltage given in Table 5. Voltage regulators with multitapped voltage transformers may be operated at nominal system voltages below the maximum rated voltage, and may deliver rated line amperes without exceeding the temperature limits of Table 2.

5.3 Operating voltage limits

Regulators, including their controls, shall be suitable for operation within the following limits of voltage provided that the rated load current is not exceeded:

a) A minimum input voltage of 97.75 V times the ratio of voltage transformer.
b) A maximum input voltage at rated load amperes of 1.05 times the rated input voltage of the regulator or 137.5 V times the ratio of voltage transformer, whichever is less.
c) A maximum input voltage at no load of 1.10 times the rated input voltage of the regulator or 137.5 V times the ratio of voltage transformer, whichever is less.
d) A minimum output voltage of 103.5 V times the ratio of voltage transformer.
e) A maximum output voltage of 1.1 times the rated voltage of the regulator or 137.5 V times the ratio of voltage transformer, whichever is less.
f) The output voltage obtainable with a given input voltage is limited also by the regulator voltage range.

Typical examples of the application of these rules to some common ratings of regulators are given in Table 8.

5.4 Supplementary continuous-current ratings

Single-phase step-voltage regulators up to 19.9 kV, inclusive, rated 668 A and below shall have the continuous-current ratings or 668 A, whichever is less, on intermediate ranges of steps as shown in Table 6.

Three-phase step-voltage regulators up to 13.8 kV, inclusive, rated 668 A and below, have the following continuous-current ratings or 668 A, whichever is less, on intermediate ranges of steps as shown in Table 7.

5.5 Voltage supply ratios

Values of voltage supply ratios are given in Table 9. When a voltage supply ratio is specified that is not a preferred value shown in Table 9, an ancillary transformer may be furnished in the unit or control to modify the preferred ratio.

Copyright © 2000 IEEE. All rights reserved.

Copyright The Institute of Electrical and Electronics Engineers, Inc.
Provided by IHS under license with IEEE
No reproduction or networking permitted without license from IHS
Not for Resale

Table 3—Preferred ratings for oil-immersed step-voltage regulators (single phase)

Nominal system voltage	BIL (kV)	kVA	Line amperes
2400/4160Y	60	50 75 100 125 167 250 333 416	200 300 400 500 668 1000 1332 1665
4800/8320Y	75	50 75 100 125 167 250 333 416	100 150 200 250 334 500 668 833
7620/13 200Y	95	38.1 57.2 76.2 114.3 167 250 333 416 500 667 833	50 75 100 150 219 328 438 546 656 875 1093
13 800	95	69 138 207 276 414 552	50 100 150 200 300 400
14 400/24 940Y	150[a]	72 144 216 288 333 432 576 667 833	50 100 150 200 231 300 400 463 578
19 920/34 500Y	150	100 200 333 400 667 833	50 100 167 201 334 418

[a]Low-frequency test voltage 50 kV by induced test with neutral grounded.

Copyright © 2000 IEEE. All rights reserved.
Copyright The Institute of Electrical and Electronics Engineers, Inc.
Provided by IHS under license with IEEE
No reproduction or networking permitted without license from IHS
Not for Resale

Table 4—Preferred ratings for oil-immersed step-voltage regulators (three phase)

Nominal system voltage	BIL (kV)	Self-cooled		Self-cooled/forced-cooled	
		kVA	Line amperes	kVA	Line amperes
2400	45	500 750 1000	1155 1732 2309	625 937 1250	1443 2165 2887
2400/4160Y	60	500 750 1000	667 1000 1334	625 937 1250	833 1250 1667
4800	60	500 750 1000	577 866 1155	625 937 1250	721 1082 1443
7620/13 200Y	95	500 750 1000 1500 2000	219 328 437 656 874	625 938 1250 2000 2667	274 410 546 874 1166
7970/13 800Y	95	500 750 1000 1500 2000 2500	209 313 418 628 837 1046	625 937 1250 2000 2667 3333	261 391 523 837 1116 1394
14 400/24 940Y	150	500 750 1000 1500 2000 2500	125.5 188.3 251 377 502 628	625 937 1250 2000 2667 3333	156.8 235.4 314 502 669 837
19 920/34 500Y	150	500 750 1000 1500 2000 2500	83.7 125.5 167 251 335 418	625 937 1250 2000 2667 3333	104.5 156.8 209 335 447 557
26 560/46 000Y	250	500 750 1000 1500 2000 2500	62.8 94.1 126 188 251 314	625 937 1250 2000 2667 3333	78.5 117.6 157 251 335 419
39 840/69 000Y	350	500 750 1000 1500 2000 2500	41.8 62.8 83.7 126 167 209	625 937 1250 2000 2667 3333	52.5 78.5 105 167 223 278

Copyright © 2000 IEEE. All rights reserved.

Copyright The Institute of Electrical and Electronics Engineers, Inc.
Provided by IHS under license with IEEE
No reproduction or networking permitted without license from IHS
Not for Resale

Table 5—Supplementary voltage ratings for regulators

Number of phases	Rated voltage	Operating voltage
Single-phase	7620	7200
Three-phase	2500	2400
	4330	4160
	5000	4800
	8660	8320
	13 200	12 470
	13 800	13 200

Table 6—Supplementary continuous-current ratings for single-phase regulators

Range of voltage regulation (%)	Continuous-current rating (%)
10.0	100
8.75	110
7.5	120
6.25	135
5.0	160

Table 7—Supplementary continuous-current ratings for three-phase regulators

Range of voltage regulation (%)	Continuous-current rating (%)
10.0	100
8.75	108
7.5	115
6.25	120
5.0	130

5.6 Insulation levels

Regulators shall be designed to provide coordinated low-frequency and lightning impulse insulation levels on line terminals, and low-frequency insulation levels on neutral terminals. The identity of a set of coordinated levels shall be its basic impulse insulation level (BIL), as shown in Table 10.

NOTE—When single-phase regulators are connected in wye, the neutral of the regulator bank shall be connected to the neutral of the system. A delta connection of the regulators is commonly recommended when the system is three-wire ungrounded.

5.7 Losses

The losses specified by the manufacturer shall be the no-load (excitation) and total losses, as defined in 3.23 and 3.47, respectively.

Copyright © 2000 IEEE. All rights reserved.
Copyright The Institute of Electrical and Electronics Engineers, Inc.
Provided by IHS under license with IEEE
No reproduction or networking permitted without license from IHS
Not for Resale

Copyright The Institute of Electrical and Electronics Engineers, Inc.
Provided by IHS under license with IEEE
No reproduction or networking permitted without license from IHS
Copyright © 2000 IEEE. All rights reserved.
Not for Resale

Table 8—Typical examples of operating voltage limits including all operating voltage tolerances

Nominal system voltage	Regulator voltage rating (V)		Voltage supply ratio[a]	Input voltage (V)			Output voltage (V)	
	Single-phase	Three-phase		Minimum	Maximum at rated-load amperes	Maximum at no-load	Minimum	Maximum at rated-load amperes or at no-load
2400	2500	2500	20	1955	2625	2750	2070	2750
2400 / 4160Y	2500	—	20	1955	2625	2750	2070	2750
2400 / 4160Y	—	4330	34.6	3380	4550	4760	3580	4760
4800	5000	5000	40	3910	5250	5500	4140	5500
7200	7620	—	60	5870	8000	8250	6210	8250
7200	—	8660	60	5870	8250	8250	6210	8250
4800 / 8320Y	5000	—	40	3910	5250	5500	4140	5500
8320	—	8660	69.3	6775	9090	9525	7170	9525
12 470	13 800	13 800	104	10 170	14 300	14 300	10 760	14 300
7200 / 12 470Y	7620	—	60	5870	8000	8250	6210	8250
7200 / 12 470Y	—	13 800	104	10 170	14 300	14 300	10 760	14 300
7620 / 13 200Y	7620	—	63.5	6210	8000	8380	6570	8380
7620 / 13 200Y	7620	—	66.3	6480	8000	8380	6860	8380
7620 / 13 200Y	—	13 200	110	10 750	13 860	14 520	11 400	14 520
7960 / 13 800Y	—	13 800	115	11 240	14 490	15 180	11 900	15 180
7960 / 13 800Y	7690	—	66.3	6480	8360	8760	6860	8760
13 200	13 800	13 800	110	10 750	14 490	15 125	11 400	15 125
14 400	13 800	12 800	120	11 730	14 490	15 180	12 420	15 180
14 400 / 24 940Y	14 400	—	120	11 730	15 120	15 840	12 420	15 840
19 920 / 34 500Y	19 920	—	166	16 230	20 920	21 910	17 180	21 910
14 400 / 24 940Y	—	24 940	208	20 330	26 190	27 435	21 530	27 435
19 920 / 34 500Y	—	34 500	287.5	28 100	36 225	37 950	29 760	37 950
26 560 / 46 000Y	—	46 000	373.3	36 490	48 300	50 600	38 640	50 600
39 840 / 69 000Y	—	69 000	575	56 210	72 450	75 900	59 510	75 900

[a]Where the listed potential ratio is provided, an additional ancillary transformer may be required.

NOTE—Example values are derived using procedures of 5.3.

Table 9—Values of voltage supply ratios

Voltage rating of regulator		Values of voltage supply ratios
Single-phase	Three-phase	
2500	2500	20, 20.8
—	4330	34.6, 36.1
5000	5000	40, 41.7
7620	—	60, 63.5
7690	—	66.3
—	8660	69.3, 72.2
—	13 200	110, 104
13 800	13 800	115, 110
14 400	—	120
19 920	—	166
—	24 940	208
—	34 500	287.5
—	46 000	383.3
—	69 000	575

Table 10—Interrelationships of dielectric insulation levels for regulators used on systems with BIL ratings of 350 kV and below

BIL kV	Low-frequency voltage insulation level (kV rms)	Impulse levels		
		Full wave	Chopped wave	
		(kV crest)	(kV crest)	Minimum time to flashover (μs)
45	15	45	54	1.5
60	19	60	69	1.5
75	26	75	88	1.6
95	34	95	110	1.8
150	50	150	175	3.0
200	70	200	230	3.0
250	95	250	290	3.0
350	140	350	400	3.0

Copyright © 2000 IEEE. All rights reserved.
Copyright The Institute of Electrical and Electronics Engineers, Inc.
Provided by IHS under license with IEEE
No reproduction or networking permitted without license from IHS
Not for Resale

5.7.1 Total losses

The total losses of a regulator shall be the sum of the no-load (excitation) and load losses.

5.7.2 Tolerance for losses

Unless otherwise specified, the losses represented by a test of a regulator shall be subject to the following tolerances: the no-load losses of a regulator shall not exceed the specified no-load losses by more than 10%, and the total losses of a regulator shall not exceed the specified total losses by more than 6%. Failure to meet the loss tolerances shall not warrant immediate rejection but lead to consultation between purchaser and manufacturer about further investigation of possible causes and the consequences of the higher losses.

NOTE—Since losses will differ at different operating positions of the regulator, care must be exercised in the consideration of tap position with losses. Some styles of step-voltage regulators will exhibit appreciable change in load loss when boosting versus bucking, or will exhibit appreciable change in no-load loss on alternate tap positions. See 5.7.3.

5.7.3 Determination of losses and excitation current

No-load (excitation) losses and exciting current shall be determined for the rated voltage and frequency on a sine-wave basis, unless a different form is inherent in the operation of the apparatus.

Load losses shall be determined for rated voltage, current, and frequency and shall be corrected to a reference temperature equal to the sum of the limiting (rated) winding temperature rise by resistance from Table 2 plus 20 °C.

Since losses may be very different at different operating positions and with various design options, losses shall be considered in practice as the sum of no-load and load losses where

a) No-load loss is the average of no-load loss in the neutral and next adjacent boost position with rated voltage applied to the shunt or series winding for regulators that do not include a series transformer.

   NOTE—It will be apparent, in the case of a Type B step-voltage regulator that is on the next adjacent boost position, that the excitation voltage applied at the source terminal will be higher at the shunt winding. Care must be exercised to assure that rated excitation is present on the shunt winding; this may be accomplished by exciting the regulator from the load terminal.

b) No-load loss is reported for neutral position, maximum boost position, and position adjacent to maximum boost position for regulators that include a series transformer.

c) Load loss is the average load loss in both the maximum and adjacent-to-maximum buck positions, and the maximum and adjacent-to-maximum boost positions (that is, four positions) with rated current in the windings.

5.8 Short-circuit requirements

5.8.1 General

Step-voltage regulators shall be designed and constructed to withstand the mechanical and thermal stresses produced by external short circuits of 25 times the base rms symmetrical rated load current.

a) The short-circuit current shall be assumed to be displaced from zero insofar as determining the mechanical stresses. The maximum peak value of the short-circuit current that the regulator is required to withstand is equal to 2.26 times the required rms symmetrical short-circuit current.

b) The short-circuit current shall be assumed to be a duration of 2 s to determine the thermal stresses.

It is recognized that short-circuit withstand capability can be adversely affected by the cumulative effects of repeated mechanical and thermal over-stressing, as produced by short-circuits and loads above the name-

--`,,-`-`,,`,,`,`,,`---
Copyright © 2000 IEEE. All rights reserved.

Copyright The Institute of Electrical and Electronics Engineers, Inc.
Provided by IHS under license with IEEE
No reproduction or networking permitted without license from IHS
Not for Resale

plate rating. Since means are not available to continuously monitor and quantitatively evaluate the degrading effects of such duty, short-circuit tests, when required, should be performed prior to placing the regulator in service. It is recommended that current-limiting reactors be installed, when necessary, to limit the short-circuit current to a maximum of 25 times the normal full-load current.

5.8.2 Mechanical capability demonstration

It is not the intent of this subclause that every regulator design be short-circuit tested to demonstrate adequate construction. When specified, tests of short-circuit mechanical capability shall be performed as described in 8.8.

5.8.3 Thermal capability of regulators for short-circuit conditions

The temperature of the conductor material in the windings of regulators under the short-circuit conditions specified in 5.8.1 item b), as calculated by methods described in 8.9.4, shall not exceed 250 °C for a copper conductor or 200 °C for an EC aluminum conductor. A maximum temperature of 250 °C shall be allowed for aluminum alloys that have resistance to annealing properties at 250 °C, equivalent to EC aluminum at 200 °C, or for application of EC aluminum where the characteristics of the fully annealed material satisfy the mechanical requirements. In setting these temperature limits, the following factors were considered:

a) Gas generation from oil or solid insulation
b) Conductor annealing
c) Insulation aging

5.9 Tests

Except as specified in 5.9.1, 5.9.2, and Clause 8, tests shall be performed as specified in IEEE Std C57.12.00-1993 and in IEEE Std C57.12.90-1999. Tests are divided into two categories: routine and design. Routine tests are made for quality control by the manufacturer to verify during production that the product meets the design specifications. Design tests are made to determine the adequacy of the design of a particular type, style, or model of equipment or its component parts to meet its assigned rating under normal service conditions or under special conditions if specified.

5.9.1 Routine tests

The routine tests given in the following list shall be made on all regulators. The order of listing does not necessarily indicate the sequence in which the tests shall be made.

a) Resistance measurements of all windings
b) Ratio tests on all tap connections
c) Polarity test
d) No-load (excitation) loss at rated voltage and rated frequency
e) Excitation current at rated voltage and rated frequency
f) Impedance and load loss at rated current and rated frequency
g) Lightning impulse tests specified in 8.6.3
h) Applied-voltage tests
i) Induced-voltage tests
j) Insulation power factor tests
k) Insulation resistance tests

Copyright © 2000 IEEE. All rights reserved.
Copyright The Institute of Electrical and Electronics Engineers, Inc.
Provided by IHS under license with IEEE
No reproduction or networking permitted without license from IHS
Not for Resale

5.9.2 Design tests

The following design tests are made only on representative apparatus to substantiate the ratings assigned to all other apparatus of basically the same design. These tests are not intended to be used as a part of normal production. The applicable portion of these design tests may also be used to evaluate modifications of a previous design and to assure that performance has not been adversely affected. Test data from previous similar designs may be used for current designs, where appropriate. Once made, the tests need not be repeated unless the design is changed so as to modify performance.

5.9.2.1 Thermal tests

Temperature design tests shall be made on one unit of a given rating produced by a manufacturer as a record that this design meets the temperature rise requirement for a 55 °C or 65 °C rise unit. Temperature tests shall be made at the positions that produce the highest total losses at rated load current for the normal 100% rating, supplementary kVA rating (see 5.2.3) and the 160% or 668 A rating (see 5.4). When a regulator is supplied with ancillary cooling equipment to provide higher kVA ratings, temperature tests shall be made at those ratings also. Temperature tests shall be made for all kVA ratings given on the nameplate. Tests shall be made in accordance with 8.7.

5.9.2.2 Lightning impulse tests

Design lightning impulse tests shall be made on one unit of a given rating produced by a manufacturer for the purpose of demonstrating the adequacy of insulating materials breakdown and spacing under normal conditions. Tests shall be made in accordance with 8.6.2. Impulse tests are to be followed by the application of the applied and induced voltage tests.

5.9.2.3 Short-circuit tests

Short-circuit tests shall be made on one unit of a rating produced by a manufacturer for the purpose of demonstrating that the unit meets the thermal and mechanical requirements of 5.8. Where lower kVA and voltage ratings have the same design configuration, core and coil framing, and clamping as the unit tested, short-circuit tests are not required, and it is adequate to show by calculation that the mechanical forces are equal or less than the unit tested and the temperature rise of the conductor meets the criteria. Tests are to be made in accordance with 8.8.

6. Construction

6.1 Bushings

Regulators shall be equipped with bushings with an insulation level not less than that of the winding terminal to which they are connected, unless otherwise specified.

Bushings for use in regulators shall have impulse and low-frequency insulation levels as listed in Table 11.

6.2 Terminal markings

6.2.1 Terminal markings for step-voltage regulators

Regulator terminals that are connected to the load shall be designated by an *L*, and those that are connected to the source shall be designated by an *S*. For example, in the case of a single-phase regulator, the terminals

Copyright © 2000 IEEE. All rights reserved.

Copyright The Institute of Electrical and Electronics Engineers, Inc.
Provided by IHS under license with IEEE
No reproduction or networking permitted without license from IHS
Not for Resale

Table 11—Electrical characteristics of regulator bushings (kV)

Regulator BIL (kV)	Outdoor bushings			Indoor bushings[a]	
	60 Hz withstand		Impulse-full wave dry withstand	60 Hz withstand 1 min dry	Impulse-full wave dry withstand
	1 min dry (kV rms)	10 s wet[b] (kV rms)	kV crest (1.2 × 50 μm)	kV crest	kV crest (1.2 × 50 μs)
45	15	13	45	20	45
60	21	20	60	24	60
75	27	24	75	30	75
95	35	30	95	50[c]	110[c]
150	60	50	150	60	150
200	80	75	200	80	200
250	105	95	250	—	—
350	160	140	350	—	—

[a]Wet withstand values are based on water resistivity of 180 Ω·m (7000 Ω·in) and precipitation rate of 0.10 mm/s (0.2 in/min).
[b]Indoor bushings are those intended for use in indoor regulators. Indoor bushing test values do not apply to bushings used primarily for mechanical protection of insulated cable leads. A wet test value is not assigned to indoor bushings.
[c]Small indoor regulators may be supplied with bushings for a dry test of 38 kV and impulse test of 95 kV.

shall be identified by *S, L,* and *SL*. In the case of a three-phase regulator, the terminals shall be identified S_1, S_2, S_3, L_1, L_2, L_3, and, if a neutral is provided, S_0L_0.

Single-phase regulators, when viewed from the top, shall have the *S* terminal on the left, followed in sequence in a clockwise direction by the *L* terminal and the neutral terminal *SL,* as shown in Figure 3.

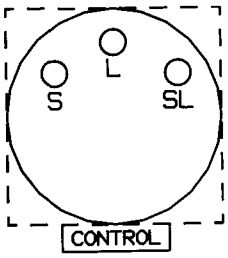

Figure 3—Single-phase regulators

For three-phase regulators, when facing the regulator on the source side, the S_1 terminal shall be in front on the right, and the L_1 terminal shall be directly behind the S_1 terminal, as shown in Figure 4(a), or the S_1 terminal shall be in front on the right, and the L_1 terminal shall be directly to the left of the S_1 terminal, as shown in Figure 4(b). The other terminals shall be located as shown in Figure 4.

Copyright © 2000 IEEE. All rights reserved.
Copyright The Institute of Electrical and Electronics Engineers, Inc.
Provided by IHS under license with IEEE
No reproduction or networking permitted without license from IHS
Not for Resale

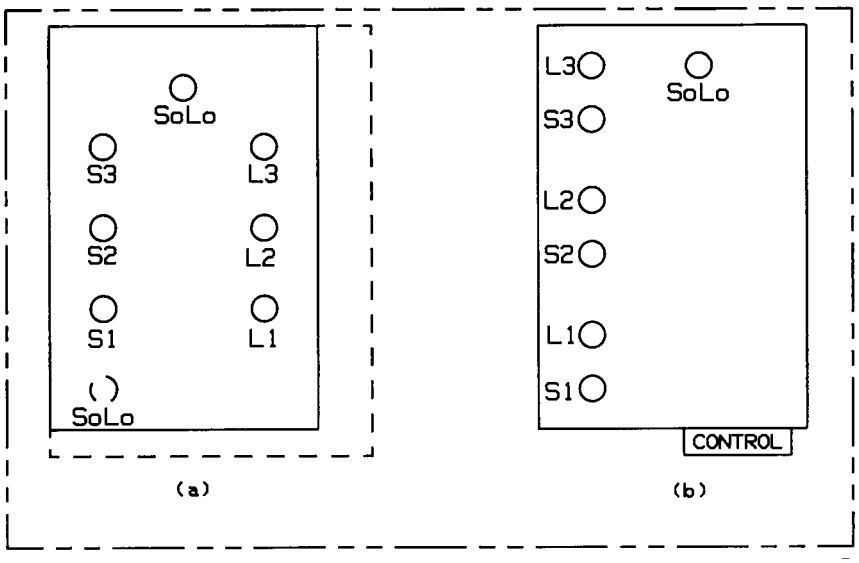

NOTE—The dotted line shows the location of the control compartment and the tap-changing under load equipment. The dotted circle shows alternate location of neutral bushing.

Figure 4—Three-phase regulators

6.3 Diagram of connections

The manufacturer shall furnish, with each voltage regulator, complete diagrams showing the leads and internal connections and their markings, including polarity markings, and the voltages obtainable with the various connections. These diagrams shall be inscribed on and be part of the nameplate.

6.4 Nameplates

Two durable metal nameplates shall be furnished with each voltage regulator and shall be affixed to the main tank and on the front of the control cabinet. Unless otherwise specified, they shall be of corrosion-resistant material. The nameplates shall show, at a minimum, the ratings and other essential operating data as specified as follows:

a) Manufacturer's name
b) Type and form designation or the equivalent
c) Class
d) Serial number
e) Month and year of manufacturer (not coded)
f) Number of phases
g) Rated kVA
h) Rated current
i) Supplementary continuous-current ratings
j) Rated voltage
k) Voltage transformer ratio
l) Rated range of regulation

Copyright © 2000 IEEE. All rights reserved.

Copyright The Institute of Electrical and Electronics Engineers, Inc.
Provided by IHS under license with IEEE
No reproduction or networking permitted without license from IHS
Not for Resale

m) Rated frequency
n) Impulse level, full wave in kilovolts (kV)
o) Untanking weight
p) Total weight
q) Insulating fluid type
r) Volume of insulating fluid
s) Conductor material
t) Average winding rise in degrees Celsius (°C)
u) Diagrams as specified in 6.3
v) Installation and operating instructions reference

6.5 Tank construction

Accepted techniques for tank construction as it relates to oil-gas space systems are the conservator (expansion tank), gas-oil sealed, nonsealed, and sealed tank systems.

6.6 Tank grounding provisions

6.6.1 Maximum continuous rating less than 300 A

Tank grounding provisions shall consist, at a minimum, of one steel pad with a 0.5 in – 13 NC tapped hole, 11 mm (0.44 in) deep and located near the bottom of the tank.

6.6.2 Maximum continuous rating 300 A or greater

Tank grounding provision shall consist, at a minimum, of one unpainted copper-faced steel or stainless steel pad, 50 mm (2 in) × 90 mm (3.5 in), with two holes horizontally spaced on 44.5 mm (1.75 in) centers, tapped for 0.5 in – 13 NC thread and located near the bottom of the tank. Minimum thread depth of each hole shall be 13 mm (0.5 in). Minimum thickness of the copper facing, when used, shall be 0.4 mm (0.015 in).

6.7 Components and accessories

6.7.1 Single-phase and three-phase step-voltage regulators

6.7.1.1 Components for full automatic control and operation

a) Control system and cabinet
b) Current and voltage transformers or the equivalent for supplying the control system
c) Tap-changer drive motor
d) Internal power supply for drive motor
e) Provision for disconnecting control power supply
f) Tap-changer position indicator

6.7.1.2 Accessories for single-phase step-voltage regulators

a) Nameplate.
b) Lifting lugs.
c) Provision for oil drainage and sampling.
d) Tank grounding provision.

Copyright © 2000 IEEE. All rights reserved.
Copyright The Institute of Electrical and Electronics Engineers, Inc.
Provided by IHS under license with IEEE
No reproduction or networking permitted without license from IHS
Not for Resale

e) Bushing terminals shall be either clamp-type or threaded stud, depending on the nameplate line current ratings as shown in Table 12.

The clamp-type terminals shall have at least the conductor range stated and shall be capable of accepting an aluminum or copper conductor. Threaded stud sizes shown are minimum. The user has the responsibility of selecting the proper conductor size for use in the clamp-type terminals. When selecting the conductor size, the user should consider factors such as additional current carrying capability with reduced regulation (see 5.4), supplementary kVA ratings (see 5.2.3) and loading at other than rated conditions (see 4.2).

f) Support lugs for pole mounting, when provided, shall conform to one of the alternatives required by ANSI C57.12.20-1997.

g) Liquid level indicator.

Table 12—Bushing terminal applications

Nameplate line current rating (A)	Conductor size range or threaded stud
150 or less	#8–4/0
151–300	#2– 477 kCM
301–668	#2– 800 kCM
669–1200	1-1/8–12 UNF-2A
1201–2000	1-1/2–12 UNF-2A

6.7.1.3 Accessories for three-phase step-voltage regulators

a) Nameplate
b) Liquid level indicator
c) Provision for oil draining and sampling
d) Provision for oil filtering
e) Provision for thermometer
f) Lifting lugs
g) Clamp-type terminals in accord with single-phase criteria [see 6.7.1.2(e)]
h) Handholes or openings to permit inspection of core and coil and load tap-changer
i) Tank grounding provision

7. Other requirements

Certain specific applications have regulator requirements not covered in Clause 4, Clause 5, or Clause 6. Clause 7 comprises descriptions of the most frequently used requirements for such regulators. They shall be provided only when specified in conjunction with the requirements of Clause 4 through Clause 6. Information in the following subclauses may be specified for some applications.

7.1 Other supplementary continuous-current ratings

When specified, other supplementary continuous-current ratings, 668 A maximum, for three-phase regulators rated 8660 V and 13 200 V shall be provided as shown in Table 13 (see 5.4).

Copyright © 2000 IEEE. All rights reserved.

Copyright The Institute of Electrical and Electronics Engineers, Inc.
Provided by IHS under license with IEEE
No reproduction or networking permitted without license from IHS
Not for Resale

Table 13—Other supplementary continuous-current ratings for three-phase regulators

Range of voltage regulation (%)	Continuous-current ratings (%)
10.0	100
8.75	110
7.5	120
6.25	135
5.0	160

7.2 Other short-circuit capability

When specified, either of the following short-circuit capabilities for regulators shall be provided:

a) Three-phase regulators rated 1500 kVA and below, capable of withstanding rms symmetrical short-circuit current of 40 times base rated load current or 20 000 A, whichever is less, for 0.8 s without damage.
b) Single-phase regulators rated 500 kVA and below, capable of withstanding rms symmetrical short-circuit current of 40 times the base rated load current or 20 000 A, whichever is less, for 0.8 s without damage.

The initial current shall be assumed to be displaced from zero insofar as determining the mechanical stresses. The maximum crest value of the short-circuit current that the regulator is required to withstand is equal to 2.26 times the required rms symmetrical short-circuited current.

7.3 Other components and accessories

When specified, the other components and accessories listed in 7.3.1 and 7.3.2 may be provided.

7.3.1 For all regulators

a) Control cabinet removable for remote control operation [to 9 m (30 ft) from the regulator]
b) Voltage limit control
c) Reverse power flow relay
d) Remote voltage reduction control

7.3.2 For three-phase regulators

a) Hand operation crank
b) Load tap-changing mechanisms in separate compartment
c) 5 A secondary rating for current transformer
d) Remote position indicator

NOTE—For Selsyn-type systems, care shall be exercised to assure that the conductor size is commensurate with the distance used.

Copyright © 2000 IEEE. All rights reserved.
Copyright The Institute of Electrical and Electronics Engineers, Inc.
Provided by IHS under license with IEEE
No reproduction or networking permitted without license from IHS
Not for Resale

8. Test code

This clause prescribes methods for performing tests specified in 5.9. The test methods covered are as follows:

a) Resistance measurements (see 8.1)
b) Polarity test (see 8.2)
c) Ratio tests (see 8.3)
d) No-load losses and excitation current (see 8.4)
e) Impedance and load losses (see 8.5)
f) Dielectric tests (see 8.6)
g) Temperature rise (see 8.7)
h) Short-circuit tests (see 8.8)
i) Data (see 8.9)

The same general principles apply to regulator tests as apply to transformers. The following material has, therefore, been taken from IEEE Std C57.12.90-1993 for uniformity with those provisions. Test system accuracies and tolerances specified in IEEE Std C57.12.00-1993 shall apply.

8.1 Resistance measurements

Resistance measurements are of fundamental importance for the following purposes:

a) Calculation of the I^2R component of conductor losses.
b) Calculation of winding temperatures at the end of a temperature test.
c) As a base for assessing possible damage in the field.

8.1.1 Determination of cold temperature

The cold temperature of the winding shall be determined as accurately as possible when measuring the cold resistance. The precautions in 8.1.1.1 through 8.1.1.3 shall be observed.

8.1.1.1 General

Cold resistance measurements shall not be made on a regulator when it is located in drafts or when it is located in a room in which the temperature is fluctuating rapidly.

8.1.1.2 Regulator windings immersed in insulating liquid

The temperature of the windings shall be assumed to be the same as the temperature of the insulating liquid, provided:

a) The windings have been under insulating liquid with no excitation and with no current in the windings from 3 h to 8 h (depending upon the size of the regulator) before the cold resistance is measured.
b) The temperature of the insulating liquid has stabilized, and the difference between top and bottom temperatures does not exceed 5 °C.

--`,,-`-`,,`,,`,`,,`---
Copyright © 2000 IEEE. All rights reserved.

Copyright The Institute of Electrical and Electronics Engineers, Inc.
Provided by IHS under license with IEEE
No reproduction or networking permitted without license from IHS
Not for Resale

8.1.1.3 Regulator windings out of insulating liquid

The temperature of the windings shall be recorded as the average of several thermometers or thermocouples inserted between the coils, with care taken to see that their measuring points are as nearly as possible in actual contact with the winding conductors. It should not be assumed that the windings are at the same temperature as the surrounding air.

8.1.2 Conversion of resistance measurements

Cold winding resistance measurements are normally converted to a standard reference temperature equal to the rated average winding temperature rise plus 20 °C. In addition, it may be necessary to convert the resistance measurements to the temperature at which the impedance loss measurements were made. The conversions are accomplished by the following formula:

$$R_s = R_m\left[\frac{(T_s + T_k)}{(T_m + T_k)}\right] \quad (1)$$

where

R_s is the resistance at desired temperature T_s,
R_m is the measured resistance,
T_s is the desired reference temperature (°C),
T_m is the temperature at which resistance was measured (°C),
T_k is 234.5 °C (copper),
T_k is 225 °C (aluminum).

NOTE—225 °C applies for pure or EC aluminum. T_k may be as high as 230 °C for alloyed aluminum. Where copper and aluminum windings are employed in the same regulator, a value for T_k of 229 °C should be applied for the correction of losses.

8.1.3 Resistance measurement methods

8.1.3.1 Bridge method

Bridge methods or high-accuracy digital instrumentation are generally preferred because of their accuracy and convenience, since they may be employed for the measurement of resistances up to 10 000 Ω. They should be used in cases where the rated current of the regulator winding to be measured is less than 1 A.

NOTE—For resistance values of 1 Ω or more, a Wheatstone bridge (or equivalent) is commonly used; for values less than 1 Ω, a Kelvin bridge (or equivalent) is commonly used. Some modern resistance bridges have capability in both ranges.

8.1.3.2 Voltmeter-ammeter method

The voltmeter-ammeter method is sometimes more convenient than the bridge method. It should be employed only if the rated current of the regulator winding is 1 A or greater. Digital voltmeters and digital ammeters of appropriate accuracy are commonly used in connection with temperature-rise determinations. To use this method, perform the following steps:

a) Measurement is made with direct current, and simultaneous readings of current and voltage are taken using the connections of Figure 5. The required resistance is calculated from the readings in accordance with Ohm's law. A battery or filtered rectifier will generally be found to be more satisfactory as a dc source than will a commutating machine. The latter may cause the voltmeter pointer to vibrate because of voltage ripple.

Copyright © 2000 IEEE. All rights reserved.
Copyright The Institute of Electrical and Electronics Engineers, Inc.
Provided by IHS under license with IEEE
No reproduction or networking permitted without license from IHS
Not for Resale

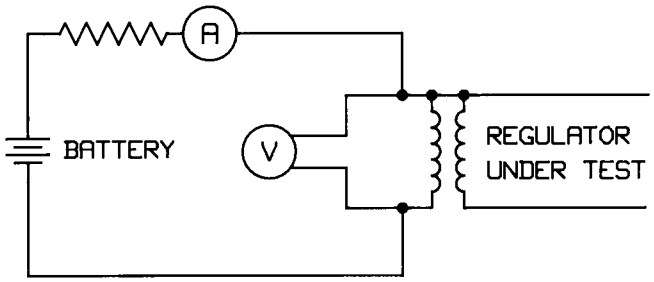

Figure 5—Connections for the voltmeter-ammeter method of resistance measurement

b) To minimize errors of observation

1) The measuring instruments shall have such ranges as will give reasonably large deflection.

2) The polarity of the core magnetization shall be kept constant during all resistance readings.

NOTE—A reversal in magnetization of the core can change the time constant and result in erroneous readings.

c) The voltmeter leads shall be independent of the current leads and shall be connected as closely as possible to the terminals of the winding to be measured. This is to avoid including in the reading the resistances of current-carrying leads and their contacts, and of extra lengths of leads.

To protect the voltmeter from damage by off-scale deflections, the voltmeter should be disconnected from the circuit before switching the current on or off. To protect test personnel from *inductive kick,* the current should be switched off by a suitably insulated switch.

If the drop of voltage is less than 1 V, a potentiometer or millivoltmeter shall be used.

d) Readings shall not be taken until after the current and voltage have reached steady-state values.

When measuring the cold resistance prior to making a heat run, note the time required for the readings to become constant. The period thereby determined should be allowed to elapse before taking the first reading when final winding hot resistance measurements are being made.

In general, the winding will exhibit a long dc time constant. To reduce the time required for the current to reach its steady-state value, a noninductive external resistor should be added in series with the dc source. The resistance should be large compared to the inductance of the winding. It will then be necessary to increase the source voltage to compensate for the voltage drop in the series resistor. The time will also be reduced by operating all other regulator windings open-circuited during these tests.

e) Readings shall be taken with not less than four values of current when deflecting instruments are used. The average of the resistances calculated from these measurements shall be considered to be the resistance of the circuit.

The current used shall not exceed 15% of the rated current of the winding whose resistance is to be measured. Larger values may cause inaccuracy by heating the winding and thereby changing its temperature and resistance.

When the current is too low to be read on a deflecting ammeter, a shunt and digital millivoltmeter or potentiometer shall be used.

Copyright © 2000 IEEE. All rights reserved.

Copyright The Institute of Electrical and Electronics Engineers, Inc.
Provided by IHS under license with IEEE
No reproduction or networking permitted without license from IHS
Not for Resale

8.2 Polarity test

Polarity testing of a regulator is to ensure correct polarity of the instrument transformers, if supplied, that may be used in conjunction with the line drop compensation circuit of the control panel. The test method of inductive kick with direct current is a common technique for this test.

NOTE—Testing for additive or subtractive polarity of the main winding, as commonly required for transformers, is not required for regulators. See 3.27.

8.2.1 Polarity by inductive kick

The following list details one procedure that may be used to check polarity by means of inductive kick with direct current. Various acceptable variations of this technique are also in common use. The test is structured to ensure that instrument transformers display polarity correctly as per the nameplate.

a) Connect the regulator as shown in Figure 6. The example shown is for a Type A regulator with voltage transformer, current transformer, and a utility winding on the main core.

b) Impress a direct voltage of known polarity *S* to *SL,* with positive polarity at *S*. Wait several seconds while the current stabilizes.

c) Connect a zero-center-reading dc voltmeter to the voltage transformer secondary winding, point 1 to point 0 on Figure 6.

d) Open the switch. A negative kick response on the voltmeter indicates the polarity is correct as marked.

e) Repeat the test for the current transformer (point 2) and the utility winding (point 3), if supplied.

NOTE—It may be necessary to place a shunt from *L* to *SL* when testing the current transformer polarity.

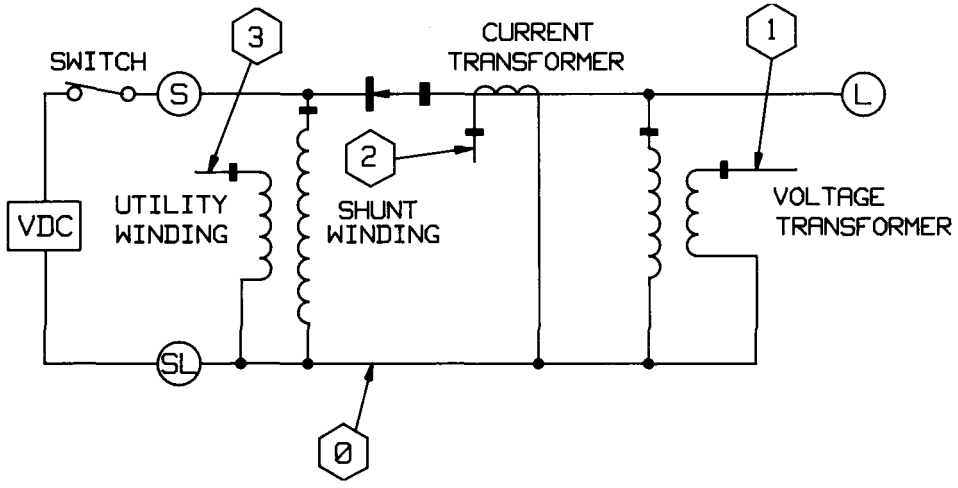

Figure 6—Type A step-voltage regulator connected for polarity testing; regulator in neutral position

Copyright © 2000 IEEE. All rights reserved.
Copyright The Institute of Electrical and Electronics Engineers, Inc.
Provided by IHS under license with IEEE
No reproduction or networking permitted without license from IHS
Not for Resale

8.3 Ratio tests

8.3.1 General

The turn ratio of a regulator is the ratio of the number of turns in the shunt winding to that in the series winding.

8.3.1.1 Taps

The turn ratio shall be determined for all taps as well as for the full winding.

8.3.1.2 Voltage and frequency

The ratio test shall be made at rated or lower voltage, and at rated or higher frequency.

8.3.1.3 Three-phase regulators

In the case of three-phase regulators, when each phase is independent and accessible, single-phase power should be used; however, when convenient, three-phase power may be used.

8.3.2 Ratio test methods

8.3.2.1 Voltmeter method

Two voltmeters shall be used with voltage transformers when necessary: one to read the voltage of the shunt winding, and the other to read the voltage of the series winding. The two voltmeters shall be read simultaneously. A second set of readings shall be taken with the instruments interchanged. The average of the two sets of readings is then calculated to compensate for instrument errors.

Voltage transformer ratios should be such as to yield approximately the same readings on the two voltmeters. Compensation for instrument errors by an interchange of instruments will otherwise not be satisfactory, and it will be necessary to apply appropriate corrections to the voltmeter readings.

Tests shall be made at not less than four voltages in approximately 10% steps, and the average result shall be taken as the true value. These values should fall within 1%. The tests shall otherwise be repeated with other voltmeters.

When appropriate corrections are applied to the voltmeter readings, tests may be made at only one voltage.

When several regulators of duplicate rating are to be tested, work may be expedited by applying the foregoing tests to only one unit and then comparing the other units with this one as a standard, in accordance with the comparison method discussed in 8.3.2.2.

8.3.2.2 Comparison method

A convenient method of measuring the ratio of a regulator is to compare it with a regulator of known ratio.

The regulator to be tested is excited in parallel with a regulator of the same nominal ratio, and the two output sides are connected in parallel, but with a voltmeter or detector in the connection between two terminals of similar polarity (see Figure 7). This is the more accurate method because the voltmeter or detector indicates the difference in voltage.

--`,,`-`-`,,`,,`,`,,`---
Copyright © 2000 IEEE. All rights reserved.

Copyright The Institute of Electrical and Electronics Engineers, Inc.
Provided by IHS under license with IEEE
No reproduction or networking permitted without license from IHS
Not for Resale

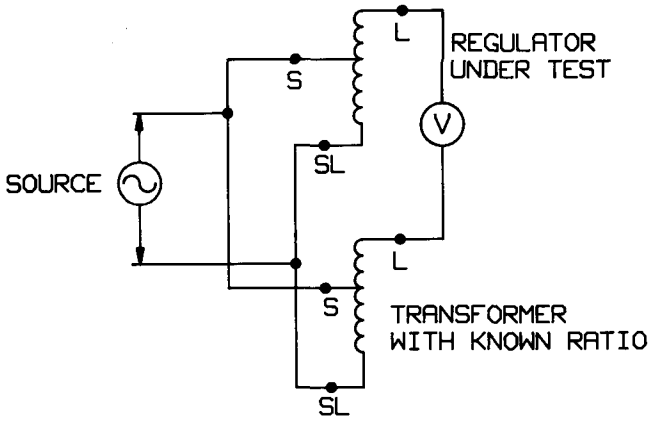

Figure 7—Voltmeter arranged to read the difference between the two output side voltages

For an alternate method, the regulator to be tested is excited in parallel with a regulator of known ratio, and the voltmeters are arranged to measure the two series winding voltages (see Figure 8).

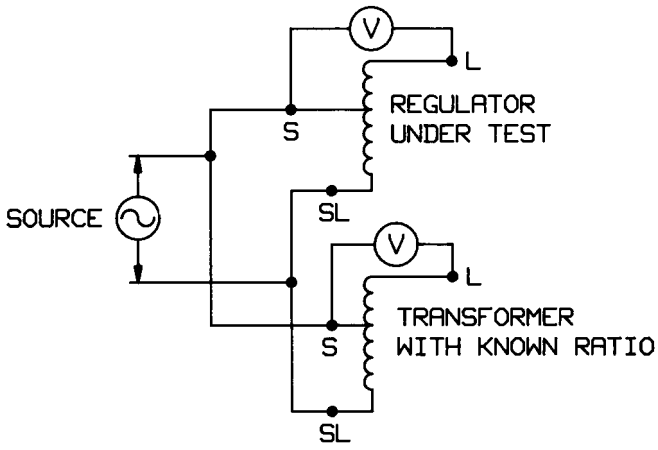

Figure 8—Voltmeter arranged to read the two series winding voltages

The voltmeters shall be interchanged and the test repeated. The averages of the results are the correct voltages.

NOTE—Readings are repeated after interchanging voltmeters.

8.3.2.3 Ratio bridge

A bridge using the basic circuit of Figure 9 may be used to measure ratio, as shown for a Type A regulator.

When detector (DET) is in balance, the regulator ratio is equal to R/R_1.

Copyright © 2000 IEEE. All rights reserved.
Copyright The Institute of Electrical and Electronics Engineers, Inc.
Provided by IHS under license with IEEE
No reproduction or networking permitted without license from IHS
Not for Resale

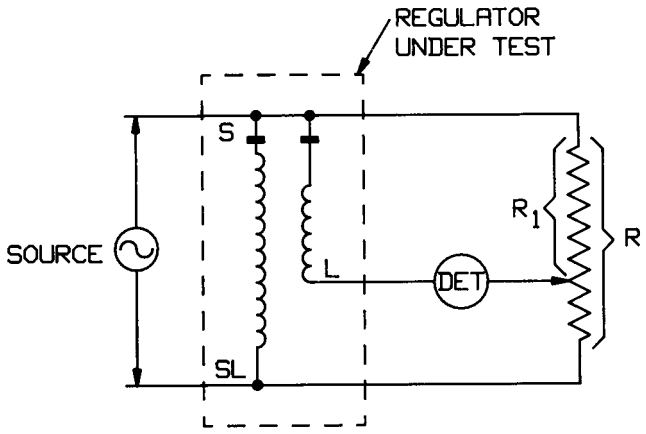

Figure 9—Basic circuit of ratio bridge

NOTES

1—Measurement of ratio using circuits of this type has in the past also been described as ratio by resistance potentiometer.

2—More accurate results can be obtained using a ratio bridge that provides phase angle correction.

3—The ratio bridge can also be used to test polarity, phase-relation, and phase-sequence.

8.4 No-load losses and excitation current

8.4.1 General

No-load (excitation) losses are those losses that are incident to the excitation of the regulator. No-load (excitation) losses include core loss, dielectric loss, and conductor loss in the windings due to excitation current, and conductor loss due to circulating current in parallel windings. These losses change with the excitation voltage.

The excitation current (no-load current) includes current that flows in any winding, used to excite the regulator when all other windings are open-circuited, and the circulating current in parallel windings. The excitation current referred to the shunt winding is generally expressed in percent of the rated load current.

The no-load loss of a regulator consists primarily of the iron loss in the regulator cores and the circulating current in parallel windings, both of which are a function of the magnitude, frequency, and waveform of the impressed voltage.

The no-load loss and current are particularly sensitive to differences in wave shape; therefore, no-load loss measurements will vary markedly with the waveform of the test voltage.

The exciting kVA is the product of the rated voltage across the energized winding in kV multiplied by the exciting current in amperes. The ratio of the no-load losses (in kW) to the exciting kVA is the no-load loss power factor of the regulator during the test, and is used in correction for phase-angle error as specified in 8.4.6.

In addition, several other factors affect the no-load losses and excitation current of a regulator. The design-related factors include the type and thickness of core steel, the core configuration, the geometry of core joints, and the core flux density.

Copyright © 2000 IEEE. All rights reserved.

Copyright The Institute of Electrical and Electronics Engineers, Inc.
Provided by IHS under license with IEEE
No reproduction or networking permitted without license from IHS
Not for Resale

Factors that cause differences in the no-load losses of regulators of the same design include variability in characteristics of the core steel, mechanical stresses induced in manufacturing, variation in gap structure, core joints, variability of reactor (preventive autotransformer) core gaps, and so forth.

8.4.2 No-load loss test

The purpose of the no-load loss test is to measure no-load losses at a specified excitation voltage, frequency and tap position. The no-load loss determination shall be based on a sine-wave voltage, unless a different waveform is inherent in the operation of the regulator. The average-voltage voltmeter method is the most accurate method for correcting the measured no-load losses to a sine-wave basis, and is recommended. This method employs two parallel-connected voltmeters: one is an average-responding (but rms calibrated) voltmeter; the other is a true rms-responding voltmeter. The test voltage is adjusted to the specified value as read by the average-responding voltmeter. The readings of both voltmeters are employed to correct the no-load losses to a sine-wave basis, using Equation (2) in accordance with 8.4.3.

8.4.2.1 Connection diagrams

Tests for the no-load loss determination of a single-phase regulator are carried out using the schemes depicted in Figure 10 and Figure 11. Figure 10 shows the necessary equipment and connections for the case where instrument transformers are not required. When instrument transformers are required, which is the general case, the equipment and connections shown in Figure 11 apply. If necessary, correction for losses in connected measurement instruments may be made by disconnecting the regulator under test and noting the wattmeter reading at the specified test circuit voltage. These losses represent the losses of the connected instruments (and voltage transformer, if used). They may be subtracted from the earlier wattmeter reading to obtain the no-load loss of the regulator under test.

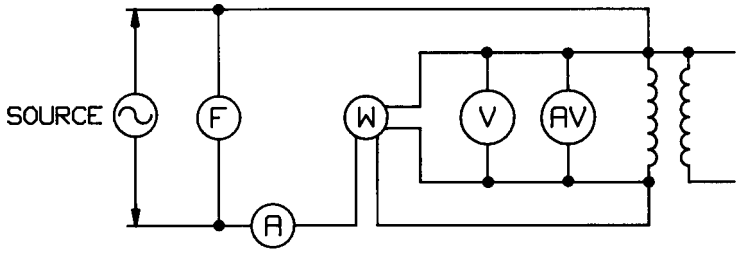

Figure 10—Connection for no-load loss test of single-phase regulator without instrument transformers

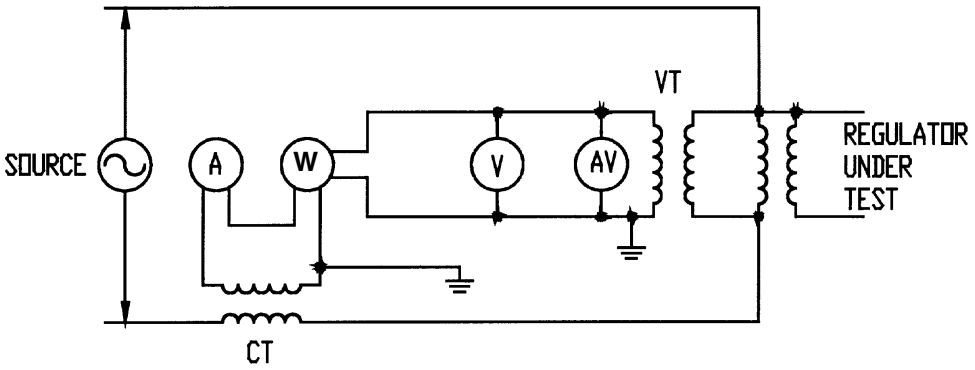

Figure 11—Connections for no-load loss test of a single-phase regulator with instrument transformers

Copyright © 2000 IEEE. All rights reserved.
Copyright The Institute of Electrical and Electronics Engineers, Inc.
Provided by IHS under license with IEEE
No reproduction or networking permitted without license from IHS
Not for Resale

8.4.2.2 Energized windings

Either the shunt winding or the series winding of the regulator under test may be energized, but it is generally more convenient to perform this test using the shunt winding. The voltage to be maintained during test should result in rated voltage being applied to, or induced into, the shunt winding. In any case, the full winding (not merely a portion of the winding) should be used whenever possible. If, for some unusual reason, only a portion of a winding is excited, this portion shall not be less than 25% of the winding.

8.4.2.3 Voltage and frequency

The operating and performance characteristics of a regulator are based upon rated voltage and rated frequency, unless otherwise specified. Therefore, the no-load loss test is conducted with rated voltage impressed across the regulator terminals, using a voltage source at a frequency equal to the rated frequency of the regulator under test, unless otherwise specified.

For the determination of the no-load losses of a single-phase or a three-phase regulator, the frequency of the test source should be within ±0.5% of the rated frequency of the regulator under test. The voltage shall be adjusted to the value indicated by the average-voltage voltmeter. Simultaneous values of rms voltage, rms current, electrical power, and the average-voltage voltmeter readings shall be recorded. For a three-phase regulator, the average of the three voltmeter readings shall be the desired nominal value.

8.4.3 Waveform correction of no-load losses

The eddy-current component of the no-load loss varies with the square of the rms value of excitation voltage and is substantially independent of the voltage waveform. When the test voltage is held at the specified value, as read on the average-voltage voltmeter, the actual rms value of the test voltage may not be equal to the specified value. The no-load losses of the regulator corrected to a sine-wave basis shall be determined from the measured value by means of the following equation:

$$P = \frac{P_m}{(P_1 + kP_2)} \tag{2}$$

where

P is the no-load loss (W) at voltage E_a corrected to a sine-wave basis,
P_m is the no-load loss measured in test,
P_1 is the per unit hysteresis loss, referred to P_m,
P_2 is the per unit eddy-current loss, referred to P_m.

$$k = \left(\frac{E_r}{E_a}\right)^2 \tag{3}$$

where

E_r is the test voltage measured by rms voltage,
E_a is the test voltage measured by average-voltage voltmeter.

The actual percentage values of hysteresis and eddy-current losses should be used, if available. If actual values are not available, it is suggested that these two loss components be assumed equal in value, assigning each a value of 0.5 per unit.

Copyright © 2000 IEEE. All rights reserved.

Copyright The Institute of Electrical and Electronics Engineers, Inc.
Provided by IHS under license with IEEE
No reproduction or networking permitted without license from IHS
Not for Resale

Equation (2) is valid only for test voltages with moderate waveform distortion. If waveform distortion in the test voltage causes the magnitude of the correction to be greater than 5%, then the test voltage waveform shall be improved for an adequate determination of the no-load losses and currents.

8.4.4 Test methods for three-phase regulators

Tests for the no-load loss determination of a three-phase regulator shall be carried out by using the three wattmeter method. Figure 12 is a representation of the equipment and connections necessary for conducting no-load loss measurements of a three-phase regulator.

8.4.5 Determination of excitation (no-load) current

The excitation (no-load) current of a regulator consists of the current that maintains the rated magnetic flux excitation in the cores of the regulator and the circulating current between parallel windings. The excitation current is usually expressed in per unit or in percent of the rated load current of the regulator. (Where the cooling class of the regulator involves more than one kVA rating, the lowest kVA rating is used to determine the base current.) Measurement of excitation current is usually carried out in conjunction with the tests for no-load losses. The rms current is recorded simultaneously during the test for no-load losses using the average-voltage voltmeter method. This value is used in calculating the per unit or percent excitation current. For a three-phase regulator, the excitation current is calculated by taking the average of the magnitudes of the three line currents.

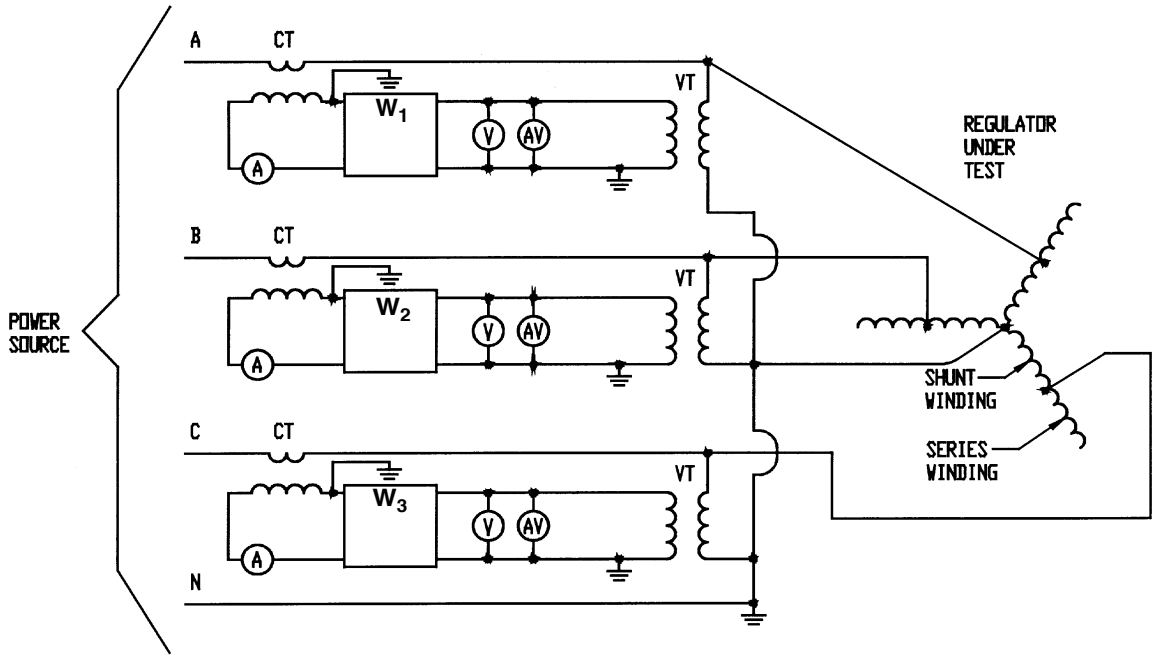

Figure 12—Three-phase regulator connections for no-load loss and excitation current test using three-wattmeter method

8.4.6 Correction of loss measurement due to metering phase-angle errors

After proper consideration of magnitude-related errors such as instrument transformer ratio errors, meter calibration, and so forth, correction of loss measurement due to phase-angle errors in the wattmeters, voltage measuring circuit, and current measuring circuit shall be applied in accordance with Table 14 and by using the following correction formula:

Copyright © 2000 IEEE. All rights reserved.
Copyright The Institute of Electrical and Electronics Engineers, Inc.
Provided by IHS under license with IEEE
No reproduction or networking permitted without license from IHS
Not for Resale

$$P_c = P_m - V_m A_m[-W_d - (V_d + C_d)] \quad (4)$$

where

P_c is the wattmeter reading, corrected for phase-angle error (W),
P_m is the actual wattmeter reading (W),
V_m is the voltmeter reading across wattmeter voltage element (V),
A_m is the ammeter reading in wattmeter current element (A),
W_d is the phase-angle error of wattmeter where applicable (rad),
V_d is the phase-angle error of voltage transformer (rad),
C_d is the phase-angle error of current transformer (rad).

Table 14—Requirements for phase-angle error correction

Apparent loss power factor ($PF = P_m/VA$)	Comments
$PF \leq 0.03$	Apply phase-angle error correction
$0.03 < PF \leq 0.10$	Apply phase-angle error correction if $(-W_d - V_d + C_d) > 290$ μrad (1 min)
$PF > 0.10$	Apply phase-angle error correction if $(-W_d - V_d + C_d) > 870$ μrad (3 min)

In general, instrument transformer phase-angle errors are a function of burden and excitation. Likewise, wattmeter phase-angle errors are a function of the scale being used and the circuit power factor. Thus, the instrumentation phase-angle errors used in the correction formula shall be specific for the test conditions involved. Only instrument transformers meeting 0.3 metering accuracy class, or better, are acceptable for measurements.

Use of Equation (4) is limited to conditions of the apparent power factor less than 0.20 and the total system phase-angle less than 20 min. If corrections are required for the apparent power factor or system phase error outside this range, the following exact formula applies:

$$\phi_a = \cos^{-1}\left[\frac{P_m}{V_m A_m}\right] \quad (5)$$

$$P_c = V_m A_m \cos[\phi_a - W_d - V_d] + C_d \quad (6)$$

For three-phase measurements, the corrections are applied to the reading of each wattmeter employed. The regulator loss at temperature T_m is then calculated as follows:

$$P(T_m) = \sum_{i=1}^{N} R_v R_a R_{ci} \quad (7)$$

where

$P(T_m)$ is the regulator losses, corrected for phase-angle error at temperature, T_m,
N is the number of phases (wattmeters),
P_{ci} is the corrected wattmeter reading of the ith wattmeter,

Copyright © 2000 IEEE. All rights reserved.

Copyright The Institute of Electrical and Electronics Engineers, Inc.
Provided by IHS under license with IEEE
No reproduction or networking permitted without license from IHS
Not for Resale

R_v is the true voltage ratio of voltage measuring circuit,
R_a is the true current ratio of current measuring circuit.

8.5 Impedance and load losses

8.5.1 General

The load losses of a regulator are those losses incident to a specified load carried by the regulator. Load losses include I^2R loss in the windings due to load current and stray losses due to eddy currents induced by leakage flux in the windings, core clamps, magnetic shields, tank walls, and other conducting parts. Stray losses may also be caused by circulating currents in parallel windings or strands. Load losses are measured by applying a short circuit across the series winding and applying sufficient voltage across the shunt winding to cause a specified current to flow in the windings. The power loss within the regulator under these conditions equals the load losses of the regulator at the temperature of the test for the specified load current and tap position.

8.5.1.1 Impedance voltage

The impedance voltage of a regulator is the voltage required to circulate rated current through one of two specified windings when the other winding is short-circuited while in a specified tap position. Impedance voltage is usually expressed in per unit, or percent, of the rated voltage of the winding across which the voltage is applied and measured. The impedance voltage comprises a resistive component and a reactive component. The resistive component of the impedance voltage, called the resistance drop, is in phase with the current and corresponds to the load losses. The reactive component of the impedance voltage, called the reactance drop, is in quadrature with the current and corresponds to the leakage-flux linkages of the windings. The impedance voltage is the phasor sum of the two components. The impedance voltage is measured during the load loss test by measuring the voltage required to circulate rated current in the windings. The measured voltage is the impedance voltage at the temperature of the test, and the power loss dissipated within the regulator is equal to the load losses at the temperature of the test and at rated load. The impedance voltage and the load losses are corrected to a reference temperature using the formulas specified in 8.5.4.1.

The impedance voltage of a step-voltage regulator generally will be less than 0.5% of the rated voltage, stated on the circuit kVA base. The impedance voltage will vary with tap position and may be somewhat higher for a two-core design.

8.5.1.2 Impedance kVA

The impedance kVA is the product of the impedance voltage across the energized winding (in kV) multiplied by the winding current in amperes. The ratio of the load losses (in kW) at the temperature of test to the impedance kVA at the temperature of test is the load loss power factor of the regulator during the test, and is used in correction for phase-angle error as specified in this standard.

8.5.2 Factors affecting the values of load losses and impedance voltage

The magnitudes of the load losses and the impedance voltage will vary depending on the regulator tap position. These changes are due to the changes in the magnitudes of winding currents and associated leakage-flux linkages, as well as changes in stray flux and accompanying stray losses. In addition, several other factors, which are detailed in the following subclauses, affect the values of load losses and impedance voltage of a regulator. Considerations of these factors, in part, explain variations in values of load losses and impedance voltage for the same regulator under different test conditions, as well as variations between the values of load losses and impedance voltage of different regulators of the same design.

--`,,`-`-`,,`,,`,`,,`---

Copyright © 2000 IEEE. All rights reserved.
Copyright The Institute of Electrical and Electronics Engineers, Inc.
Provided by IHS under license with IEEE
No reproduction or networking permitted without license from IHS
Not for Resale

8.5.2.1 Design

The design-related factors include conductor material, conductor dimensions, winding design, winding arrangement, shielding design, and selection of structural materials.

8.5.2.2 Process

The process-related factors that impact the values of load losses and impedance voltage are the dimensional tolerances of conductor materials, the final dimensions of completed windings, phase assemblies, metallic parts exposed to stray flux, and variations in properties of conductor material and other metallic parts.

8.5.2.3 Temperature

Load losses are also a function of temperature. The I^2R component of the load losses increases with temperature, while the stray loss component decreases with temperature. Procedures for correcting the load losses and impedance voltage to the standard reference temperature are described in 8.5.4.

8.5.2.4 Measurements

At low power factors, judicious selection of measurement method and test system components is essential for accurate and repeatable test results. The phase-angle errors in the instrument transformers, measuring instruments, bridge networks, and accessories affect the load loss test results. Procedures for correcting the load losses for metering phase-angle errors are described in 8.4.6.

8.5.3 Tests for measuring load loss and impedance voltage

8.5.3.1 Preparation

The following preparatory requirements shall be satisfied for accurate test results:

a) To determine the temperature of the windings with sufficient accuracy, the following conditions shall be met (and, except as noted, the following conditions are necessary):

   1) The temperature of the insulating liquid has stabilized and the difference between top and bottom oil temperatures does not exceed 5 °C.

   2) The temperature of the windings shall be taken immediately before and after the load loss and impedance voltage test in a manner similar to that described in 8.1.1. (The average shall be taken as the true temperature.)

   3) The difference in winding temperature before and after the test shall not exceed 5 °C.

      NOTE—For regulators, where it may not be practical to wait for thermal equilibrium, the method used to determine the winding temperature shall take into consideration the lack of thermal equilibrium and the effect of ohmic heating of the winding conductors by load current during the test. The method used can be verified by staging a repeated measurement of the load losses and impedance voltage at a later time when above conditions are met.

b) Conductors used for short-circuiting the series winding of the regulator shall have a cross-sectional area equal to or greater than the corresponding regulator leads. They should be as short as possible and should be kept away from magnetic masses. Contacts should be clean and tight.

c) The frequency of the test source used for measuring load losses and impedance voltage shall be within ±0.5% of the nominal value.

d) The maximum value of correction to the measured load losses due to the test system phase-angle is limited to ±5% of measured losses. If more than 5% correction is required, test methods and/or test apparatus should be improved for an adequate determination of load losses.

Copyright © 2000 IEEE. All rights reserved.

Copyright The Institute of Electrical and Electronics Engineers, Inc.
Provided by IHS under license with IEEE
No reproduction or networking permitted without license from IHS
Not for Resale

8.5.3.2 Load loss and impedance test of a single-phase regulator

A regulator, which basically is an autotransformer, may be tested for load losses and impedance with its internal connections unchanged and with the unit in a specified tap position. The test is made by shorting the input (or output) terminals while voltage (at rated frequency) is applied to the other terminals. The voltage is adjusted to cause rated line current to flow. For the purpose of measuring load losses and impedance voltage, it is more common that the series and shunt windings of the regulator are treated as separate windings—the series winding short-circuited and the shunt winding excited. In this situation, where the regulator is connected in the two winding connection for the test, the current held shall be the rated current of the excited winding. The load loss watts and applied voltamperes will be the same, whether series and shunt windings are treated as separate windings in the two winding connection or are connected in the autotransformer connections so long as rated winding current is held in the first case and rated line current is held in the second case. The impedance voltage measurement from the two winding connection will need to be revised to reflect the autotransformer connection. Simultaneous readings of the ammeter, voltmeter, and wattmeter are recorded for determinations of load losses and impedance voltage. The regulator under test should then be disconnected, and readings of losses taken on the wattmeter that represent the losses of the measuring equipment, similar to the procedure in the no-load loss test.

The connections and apparatus needed for the determination of the load loss and impedance voltage of a single-phase regulator are shown in Figure 13 and Figure 14. Figure 13 applies when instrument transformers are not required. If instrument transformers are required, which is the general case, then Figure 14 applies.

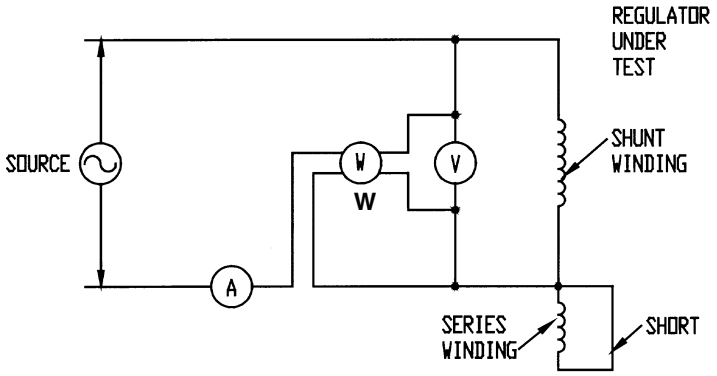

Figure 13—Single-phase regulator connections for load loss and impedance voltage test without instrument transformers

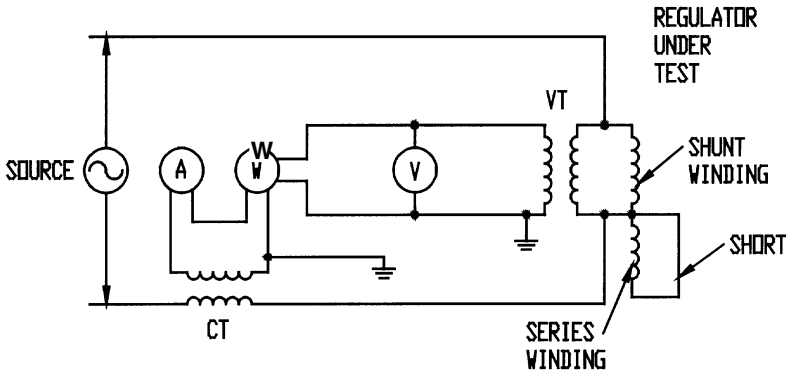

Figure 14—Single-phase regulator connections for load loss and impedance voltage test with instrument transformers

Copyright © 2000 IEEE. All rights reserved.
Copyright The Institute of Electrical and Electronics Engineers, Inc.
Provided by IHS under license with IEEE
No reproduction or networking permitted without license from IHS
Not for Resale

8.5.3.3 Impedance test of a three-phase regulator

The terminals of the series winding of each phase are short-circuited together, and three-phase voltages (at rated frequency) at suitable magnitude are applied to the terminals of the shunt windings to cause their rated winding currents to flow in a specified tap position. The procedure is similar to that described for single-phase units except that all connections and measurements are three phase instead of single phase. If the three line currents cannot be balanced, their average rms value should correspond to the desired value, at which time simultaneous readings of wattmeters, voltmeters, and ammeters should be recorded.

8.5.3.3.1 Measurement connections

For three-phase regulators, Figure 15 shows the apparatus and connections using the three-wattmeter method.

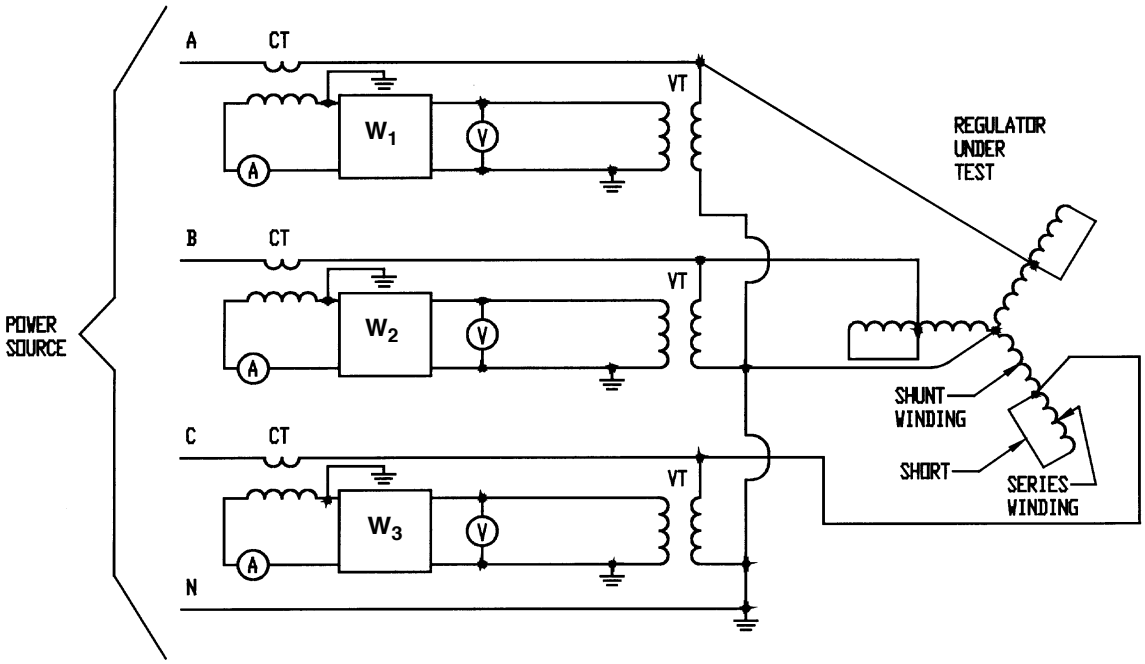

Figure 15—Three-phase regulator connections for load loss and impedance voltage test using the three-wattmeter method

8.5.4 Calculation of impedance voltage and load losses from test data

Load losses and impedance voltage measurements vary with temperature and, in general, shall be corrected to a reference temperature. In addition, load loss measurement values shall be corrected for metering phase-angle error (see 8.4.6).

8.5.4.1 Temperature correction of load losses

Both I^2R losses and stray losses of a regulator vary with temperature. The I^2R losses, $P_r(T_m)$, of a regulator are calculated from the ohmic resistance measurements (corrected to the temperature, T_m, at which the measurement of load losses and impedance voltage was done) and the currents that were used in the impedance measurement. These I^2R losses subtracted from the measured load loss watts, $P(T_m)$, give the stray losses, $P_s(T_m)$, of the regulator at the temperature at which the load loss test was made.

Copyright © 2000 IEEE. All rights reserved.

Copyright The Institute of Electrical and Electronics Engineers, Inc.
Provided by IHS under license with IEEE
No reproduction or networking permitted without license from IHS
Not for Resale

$$P_s(T_m) = P(T_m) - P_r(T_m) \tag{8}$$

where

$P_s(T_m)$ is the calculated stray losses *(W)* at temperature T_m,
$P(T_m)$ is the regulator load losses *(W),* corrected in accordance with 8.4.6, for phase angle error at temperature T_m,
$P_r(T_m)$ is the calculated I^2R loss *(W)* at temperature T_m.

The I^2R component of the load losses increases with temperature. The stray loss component diminishes with temperature. Therefore, when it is desirable to convert the load losses from the temperature at which it is measured, T_m, to another temperature, T, the two components of the load losses are corrected separately.

Thus,

$$P_r(T) = \frac{P_r(T_m)(T_k + T)}{(T_k + T_m)} \tag{9}$$

$$P_{rs}(T) = \frac{P_{rs}(T_m)(T_k + T_m)}{(T_k + T)} \tag{10}$$

then

$$P(T) = P_r(T) + P_{rs}(T) \tag{11}$$

where

$P_r(T)$ is the I^2R loss (W) at temperature T (°C),
$P_s(T)$ is the stray losses (W) at temperature T (°C),
$P(T)$ is the regulator load losses (W) corrected to temperature T (°C),
T_k is 234.5 °C (copper),
T_k is 225 °C (aluminum).

NOTE—225 °C applies for pure or EC aluminum. T_k may be as high as 230 °C for alloyed aluminum. Where copper and aluminum windings are employed in the same regulator, a value for T_k of 229 °C should be applied for the correction of losses.

8.5.4.2 Impedance voltage

The impedance voltage and its resistive and reactive components at the specified tap position are determined by the use of the following equations:

$$E_r(T_m) = \frac{P(T_m)}{I} \tag{12}$$

$$E_x = \sqrt{E_z(T_m)^2 - E_r(T_m)^2} \tag{13}$$

$$E_r(T) = \frac{P(T)}{I} \tag{14}$$

$$E_z(T) = \sqrt{E_r(T)^2 + E_x^2} \tag{15}$$

Copyright © 2000 IEEE. All rights reserved.
Copyright The Institute of Electrical and Electronics Engineers, Inc.
Provided by IHS under license with IEEE
No reproduction or networking permitted without license from IHS
Not for Resale

where

$E_r(T_m)$ is the resistance voltage drop (volts) of in-phase component at temperature T_m,
$E_r(T)$ is the resistance voltage drop (volts) of in-phase component corrected to temperature T,
E_x is the reactance voltage drop (volts) of quadrature component,
$E_z(T_m)$ is the impedance voltage (volts) at temperature T_m,
$E_z(T)$ is the impedance voltage (volts) at temperature T,
$P(T)$ is the regulator load losses (watts) corrected to temperature T,
$P(T_m)$ is the regulator load losses (watts) measured at temperature T_m,
I is the current in amperes in the excited winding.

Per unit values of the resistance, reactance, and impedance voltage are obtained by dividing $E_r(T)$, E_x, and $E_z(T)$ by the rated voltage. Percentage values are obtained by multiplying per-unit values by 100.

8.6 Dielectric tests

8.6.1 General

8.6.1.1 Factory dielectric tests

The purpose of dielectric tests in the factory is to demonstrate that the regulator has been designed and constructed to withstand the specified insulation levels.

8.6.1.2 Test requirements

Test levels and other test parameters shall be as outlined in IEEE Std C57.12.00-1999 or as otherwise specified.

8.6.1.3 Measurement of test voltages

Unless otherwise specified, the dielectric test voltages shall be measured or applied, or both, in accordance with IEEE Std 4-1995 with the following exceptions:

a) A protective resistance may be used in series with sphere gaps, on either the live or grounded sphere. Where necessary to protect the spheres from arc damage, it may be omitted.
b) The bushing-type potential divider method shall be considered a standard method for regulator tests.
c) The rectified capacitor-current method shall be considered a standard method for regulator tests.
d) In conducting low-frequency tests for regulators of 100 kVA and less to be tested at 50 kV or less, it is permissible to depend on the ratio of the testing transformer to indicate the proper test voltage.

8.6.1.4 Tests on bushings

Separate bushings tests will be performed in accordance with Annex B.

8.6.1.5 Dielectric tests in the field

Field dielectric tests will be performed in accordance with Annex B.

Copyright © 2000 IEEE. All rights reserved.

Copyright The Institute of Electrical and Electronics Engineers, Inc.
Provided by IHS under license with IEEE
No reproduction or networking permitted without license from IHS
Not for Resale

8.6.1.6 Factory dielectric tests and conditions

8.6.1.6.1 Test sequence

Lightning impulse voltage tests shall precede the low-frequency tests.

8.6.1.6.2 Temperature

Dielectric tests may be made at temperatures assumed under normal operation or at the temperatures attained under the conditions of routine test.

8.6.1.6.3 Assembly

Regulators, including bushings and terminal compartments when necessary to verify air clearances, shall be assembled prior to making dielectric tests, but assembly of items, such as radiators and cabinets, that do not affect dielectric tests is not necessary. Bushings shall, unless otherwise authorized by the purchaser, be those to be supplied with the regulator.

8.6.2 Design lightning impulse test procedures

Lightning impulse tests, when required as a design test, shall consist of and be applied in the following order: one reduced full wave, two chopped waves, and one full wave. The time interval between application of the last chopped wave and the final full wave should be minimized to avoid recovery of dielectric strength if a failure were to occur prior to the final full wave.

NOTE—See IEEE Std C57.98-1993 for guide information on impulse testing techniques, interpretation of oscillograms, and failure detection criteria.

8.6.2.1 General

Impulse tests shall be made without excitation.

8.6.2.1.1 Reduced full-wave test

This wave is the same as a full wave, except that the crest value shall be between 50% and 70% of the full-wave value given in Table 10.

8.6.2.1.2 Chopped-wave test

This wave is also the same as the full wave, except that the crest value shall be at the required higher level and the voltage wave shall be chopped at or after the required minimum time to sparkover in accordance with Table 8. In general, the gap or other equivalent chopping device shall be located as close as possible to the terminals and the impedance shall be limited to that of the necessary leads to the gap; however, it shall be permissible for the manufacturer to add resistance to limit the amount of overswing to the opposite polarity to 30% of the amplitude of the chopped wave.

8.6.2.1.3 Full-wave test

The test wave rises to crest in 1.2 μs and decays to half of crest value in 50 μs from the virtual time zero. The crest value shall be in accordance with Table 10, subject to a tolerance of ±3%, and no flashover of the bushing or test gap shall occur. The tolerance on time to crest should normally be ±30% and the tolerance on time to half of crest shall normally be ±20%; however, as a practical matter, the following shall be considered:

Copyright © 2000 IEEE. All rights reserved.
Copyright The Institute of Electrical and Electronics Engineers, Inc.
Provided by IHS under license with IEEE
No reproduction or networking permitted without license from IHS
Not for Resale

a) The time to crest shall not exceed 2.5 μs except for windings of large impulse capacitance (low voltage, high kVA and some high voltage, high kVA windings). To demonstrate that the large capacitance of the winding causes the long front, the impulse generator series resistance may be reduced, which should cause super-imposed oscillations. Only the inherent generator and lead inductances should be in the circuit.

b) The impedance of some windings may be so low that the desired time to the 50% voltage point on the tail of the wave cannot be obtained with available equipment. In such cases, shorter waves may be used. To ensure that an adequate test is obtained, the capacitance of the generator with the connection used should exceed 0.011 μF.

For convenience in measurement, the time to crest may be considered 1.67 times the actual time between points on the front of the wave at 30% and 90% of the crest value.

The virtual time zero can be determined by locating points on the front of the wave at which the voltage is, respectively, 30% and 90% of the crest value, and then drawing a straight line through these points. The intersection of this line with the time axis (zero-voltage line) is the virtual time zero.

When oscillations exist on the front of the waves, the 30% and 90% points shall be determined from the average, smooth wave front sketched in through the oscillations. The magnitude of the oscillations preferably should not exceed 10% of the applied voltage.

When there are high-frequency oscillations on the crest of the wave, the crest value shall be determined from a smooth wave sketched through the oscillations. If the period of these oscillations is 2 μs or more, the actual crest value shall be used.

8.6.2.1.4 Wave polarity

The test waves are normally of negative polarity to reduce the risk of erratic external flashover in the test circuit.

8.6.2.1.5 Impulse oscillograms

All impulses applied to a regulator shall be recorded by an oscilloscope or by a suitable digital transient recorder, unless their crest voltage is less than 40% of the full-wave level. These oscillograms shall include voltage oscillograms for all impulses and ground-current oscillograms for all full-wave and reduced full-wave impulses. Sweep times should be in the order of 5–10 μs for chopped-wave tests, 50–100 μs for full-wave tests, and 100–600 μs for ground-current measurements.

When reports require oscillograms, those of the first reduced full-wave voltage and current, the last two chopped-waves, and the last full-wave of voltage and current shall represent a record of the successful application of the impulse test to the regulator.

8.6.2.2 Connections and tap positions for impulse tests of line terminals

The series and shunt windings of a regulator are considered as a single winding for the purpose of the impulse test. The line terminals, *S* and *L,* are tied together through a resistor of 450 W ± 10% to limit induced voltage. Current flowing in this limiting resistor shall not interfere with the ability to detect a staged single-turn fault. A Type A regulator shall have the test applied to the source (*S*) terminal while set in the maximum buck position. A Type B regulator shall have the test applied to the load *(L)* terminal while set in the maximum boost position. The value of the induced voltage on the non-impulsed line terminal shall be in accordance with Table 10, subject to a tolerance of ±10%. Regulators intended for delta connections shall in addition have impulse voltage applied to the *SL* line terminal.

Copyright © 2000 IEEE. All rights reserved.

Copyright The Institute of Electrical and Electronics Engineers, Inc.
Provided by IHS under license with IEEE
No reproduction or networking permitted without license from IHS
Not for Resale

8.6.2.2.1 Terminals not being tested

Neutral terminals shall be solidly grounded. Line terminals shall be either solidly grounded or grounded through a resistor with an ohmic value not in excess of 450 Ω. The following factors shall be considered in the actual choice of grounding for each terminal:

a) The voltage-to-ground on any terminal that is not being tested should not exceed 80% of the full-wave impulse voltage level for that terminal.
b) When a terminal has been specified to be directly grounded in service, then that terminal shall be solidly grounded.
c) When a terminal is to be connected to a low-impedance cable connection in service, then that terminal shall either be directly grounded or grounded through a resistor with an ohmic value not in excess of the surge impedance of the cable.
d) Grounding through a low-impedance shunt for current measurements may be considered the equivalent of a solid ground.

8.6.2.2.2 Windings for series or multiple connections

When either connection is 25 kV nominal system voltage or above, the windings shall be tested on both series and multiple connections. The test voltage for the two conditions shall correspond to the BIL of the winding for that connection. For nominal system voltage 15 kV and below, only the series connections shall be tested unless tests on both connections are specified.

8.6.2.2.3 Windings for delta and wye connections

When either connection is 25 kV nominal system voltage or above, the three-phase regulator shall be tested on both delta and wye connections. The test voltage for each connection shall be that corresponding to the BIL of the winding for that connection. For nominal system voltage 15 kV and below, only the wye connection shall be tested unless tests on both connections are specified.

8.6.2.2.4 Protective devices that are an integral part of the regulator

Regulators may have as an integral part nonlinear protective devices connected across whole or portions of windings. During impulse testing, operation of these protective devices may cause differences between the reduced full-wave and the full-wave oscillograms. That these differences are caused by the operation of the protective devices may be demonstrated by making two or more reduced full-wave impulse tests at different voltage levels to show the trend in their operation.

Typical oscillograms depicting the operation of protective devices during impulse testing are shown in IEEE Std C57.98-1993.

8.6.2.2.5 Current transformer grounding

The secondaries of current transformers, either on bushings or permanently connected to the equipment being tested, shall be short-circuited and grounded.

8.6.2.2.6 Core and tank grounding

The core and tank shall be grounded for all impulse tests.

Copyright © 2000 IEEE. All rights reserved.
Copyright The Institute of Electrical and Electronics Engineers, Inc.
Provided by IHS under license with IEEE
No reproduction or networking permitted without license from IHS
Not for Resale

8.6.2.2.7 Grounding of potential transformers and utility windings

The secondaries of potential transformers and utility windings shall be terminated with an impedance not to exceed 450 Ω to ground. Current flowing in this limiting resistor shall not interfere with the ability to detect a staged single-turn fault.

8.6.2.3 Impulse tests on regulator neutrals

Impulse tests on the neutral terminal of a regulator or a separate regulator connected in the neutral of a transformer require one reduced and two full-waves to be applied directly to the neutral or regulator winding with an amplitude equal to the insulation level of the neutral. The regulator being tested shall be set on the maximum buck or boost position. A wave having a front of not more than 10 μs and a tail of 50 μs to half-crest shall be used except when the inductance of the winding is so low that the desired voltage magnitude and duration to the 50% point on the tail of the wave cannot be obtained. In that case, a shorter wave-tail may be used.

8.6.2.4 Detection of failure during impulse test

Given the nature of impulse test failures, one of the most important matters is the detection of such failures. There are a number of indications of insulation failure.

8.6.2.4.1 Voltage oscillograms

Any unexplained differences between the reduced full wave and final full wave detected by comparison of the two voltage oscillograms, or any such differences observed by comparing the chopped waves to each other and to the full wave up to the time of flashover, are indications of failure.

8.6.2.4.2 Smoke and bubbles

Smoke bubbles rising through the oil in the regulator are definite evidence of failure. Clear bubbles may or may not be evidence of trouble; they may be caused by entrapped air. They should be investigated by repeating the test, or by reprocessing the regulator and repeating the test to determine if a failure has occurred.

8.6.2.4.3 Failure of gap to sparkover

In making the chopped-wave test, failure of the chopping gap, or any external part to sparkover, is a definite indication of a failure either within the regulator or in the test circuit, even though the voltage oscillogram shows a chopped wave.

8.6.2.4.4 Audible noise

Unusual audible noise within the regulator at the instant of applying the impulse is an indication of trouble. Such noise should be investigated.

8.6.2.4.5 Ground current oscillograms

In this method of failure detection, the impulse current in the grounded end of the winding tested is measured by means of a oscilloscope or by a suitable digital transient recorder connected across a suitable shunt inserted between the normally grounded end of the winding and ground. Any differences in the wave shape between the reduced full wave and final full wave detected by comparing the two current oscillograms may be indications of failure or deviations due to noninjurious causes. They should be fully investigated and explained by a new reduced wave and full-wave test. Examples of probable causes of different wave shapes are operation of protective devices, core saturation, or conditions in the test circuit external to the regulator.

Copyright © 2000 IEEE. All rights reserved.

Copyright The Institute of Electrical and Electronics Engineers, Inc.
Provided by IHS under license with IEEE
No reproduction or networking permitted without license from IHS
Not for Resale

The ground current method of detection is not suitable for use with chopped-wave tests.

8.6.3 Routine lightning impulse test procedures

For regulators, the impulse tests specified in 8.6.2 are design tests. This subclause defines a routine quality control test that is suitable for high-volume, production-line testing.

8.6.3.1 Connections and tap positions for impulse tests of line terminals

The series and shunt windings of a regulator are considered a single winding for the purpose of the impulse test. The line terminals, *S* and *L,* are tied together through a resistor of 450 Ω ± 10% to limit induced voltage. Current flowing in this limiting resistor shall not interfere with the ability to detect a staged single-turn fault. A Type A regulator shall have the test applied to the *S* terminal while set in the maximum buck position. A Type B regulator shall have the test applied to the *L* terminal while set in the maximum boost position. The value of the induced voltage on the non-impulsed line terminal shall be in accordance with Table 10, subject to a tolerance of ±10%. Regulators intended for delta connections shall in addition have impulse voltage applied to the *SL* line terminal.

8.6.3.2 Procedure

The tank and core are grounded, while the windings under test are connected to ground through a low impedance shunt. This shunt shall consist of either of the following:

a) *Ground current method*. A suitable resistance shunt or wide-band pulse current transformer is employed to examine the waveform of the ground current.
b) *Neutral impedance method*. A low-impedance shunt, consisting of a parallel combination of resistance and capacitance, *R*-*C*, is employed. The voltage across this neutral impedance shunt is examined.

An impulse voltage with 1.2 × 50 μs wave shape and with specified crest magnitude shall be applied in each test. The tolerances, polarity, and method of determining the wave shape shall be as specified in 8.6.2.1.3 and 8.6.2.1.4. During each test the waveform of the ground current or the voltage wave across the neutral impedance shall be examined.

The required impulse tests shall be applied using either of the test series described in 8.6.3.2.1 and 8.6.3.2.2.

8.6.3.2.1 Method 1

One reduced full-wave test is performed, followed by one 100% magnitude full-wave test. The applied voltage wave in the first test shall have a crest value of between 50% and 70% of the assigned BIL. The applied voltage wave in the second test shall have a crest value of 100% of the assigned BIL, subject to a tolerance of ±3%. Failure detection is accomplished by comparing the reduced full-wave test with the 100% magnitude full-wave test, using either the ground current waveform or the neutral impedance voltage waveform. A dielectric breakdown will cause a difference in compared waveforms. Observed differences in the waveforms may be indications of failure, or they may be due to noninjurious causes. The criteria used to judge the magnitude of observed differences shall be based upon the ability to detect a staged single-turn fault made by placing a loop of wire around the core leg and over the coil.

8.6.3.2.2 Method 2

Two full-wave tests, with crest magnitude equal to the assigned BIL, are applied to the regulator under test. A neutral impedance shunt, using suitable values of *R* and *C*, is employed to record waveforms for comparison. The waveforms in both tests are compared to pre-established levels. A dielectric breakdown will cause a significant upturn and increase in magnitude of the voltage wave examined across the neutral impedance.

Copyright © 2000 IEEE. All rights reserved.
Copyright The Institute of Electrical and Electronics Engineers, Inc.
Provided by IHS under license with IEEE
No reproduction or networking permitted without license from IHS
Not for Resale

The pre-established levels are based upon a staged single-turn fault test, made by placing a loop of wire around the core leg and over the coil.

8.6.3.2.3 Failure detection

The failure detection methods for the routine impulse test described in 8.6.3.2.1 (method 1) and 8.6.3.2.2 (method 2) are based on the following two conditions:

a) The regulator connections during the test are such that the series winding is not shorted.
b) Chopped-wave tests are not applied.

In addition to these methods of failure detection, other methods of failure detection, as described in 8.6.2.4, are also indications of failure and should be investigated.

When the test is complete and the process of failure detection is complete, the waveform records may be discarded.

The routine impulse test shall be conducted before the low-frequency dielectric tests.

8.6.3.3 Terminals not being tested

Refer to 8.6.2.2.1.

8.6.3.4 Windings for series or multiple connections

Refer to 8.6.2.2.2.

8.6.3.5 Windings for delta and wye connections

Refer to 8.6.2.2.3.

8.6.4 Low-frequency tests

Low-frequency tests shall be performed in accordance with the requirements of 5.6 and Table 10.

The low-frequency tests levels are developed by the applied voltage and induced voltage tests described in 8.6.5 and 8.6.6, or combinations thereof. The induced voltage tests may involve either single- or three-phase excitation.

8.6.4.1 Failure detection

During either applied or induced low-frequency tests, careful attention should be maintained for evidence of possible failure. Evidence of failure could include items such as an indication of smoke and bubbles rising in the oil, an audible sound such as a “thump,” a sudden increase in test-circuit current, an appreciable increase in partial discharge (corona) level, etc. Any such indication should be carefully investigated by observation, by repeating the test, or by other tests to determine if a failure has occurred.

8.6.5 Applied voltage tests

8.6.5.1 Duration, frequency, and connections

A normal power frequency, such as 60 Hz, shall be used, and the duration of the test shall be 1 min.

Copyright © 2000 IEEE. All rights reserved.

Copyright The Institute of Electrical and Electronics Engineers, Inc.
Provided by IHS under license with IEEE
No reproduction or networking permitted without license from IHS
Not for Resale

The winding being tested shall have all its parts joined together and connected to the line terminal of the testing transformer.

All other terminals and parts (including core and tank) shall be connected to ground and to the other terminal of the testing transformer.

The ground connections between the apparatus being tested and the testing transformer shall be a substantial metallic circuit. All connections shall form a good mechanical joint without forming sharp corners or points.

8.6.5.2 Relief gap

A relief gap set at a voltage of 10% or more in excess of the specified test voltage may be connected during the applied voltage test.

8.6.5.3 Application of test voltage

The voltage should be started at one quarter or less of the full value and be increased gradually to full value in not more than 15 s. After being held for the time specified, the voltage should be reduced gradually (in not more than 5 s) to one quarter or less of the maximum value, and the circuit opened.

8.6.6 Induced voltage tests

8.6.6.1 Test duration

The induced voltage test shall be applied for 7200 cycles, or 60 s, whichever is shorter.

8.6.6.2 Test frequency

As this test applies greater than rated volts per turn to the regulator, the frequency of the impressed voltage shall be high enough to limit the flux density in the core to that permitted by IEEE Std C57.12.00-1993. The minimum test frequency to meet this condition is

$$\text{Minimum test frequency} = \frac{E_t}{1.1 \times E_r} \times \text{rated frequency} \tag{16}$$

where

E_t is the induced test voltage across winding,
E_r is the rated voltage across winding.

8.6.6.3 Application of voltage

The voltage should be started at one quarter or less of the full value and be increased gradually to a full value in not more than 15 s. After being held for the time specified in 8.6.6.1, the voltage should be reduced gradually (in not more than 5 s) to one quarter or less of the maximum value, and the circuit opened.

8.6.6.3.1 Time during partial discharge measurement concurrent with induced voltage test

The timing involved in reaching test voltage level and reducing voltage may be longer when partial discharge measurements or tests are being made concurrently with the induced voltage test.

Copyright © 2000 IEEE. All rights reserved.
Copyright The Institute of Electrical and Electronics Engineers, Inc.
Provided by IHS under license with IEEE
No reproduction or networking permitted without license from IHS
Not for Resale

8.6.6.4 Need for additional induced test

When the induced test on a winding results in a voltage between terminals of other windings in excess of the low-frequency test voltage specified in Table 10, the other winding may be sectionalized and grounded. Additional induced tests shall then be made to give the required test voltage between the terminals of windings that were sectionalized.

8.6.6.5 Grounded windings

When regulators have one winding grounded for operation on a grounded-neutral system, special care should be taken to avoid high electrostatic stresses between the other windings and ground.

8.6.6.6 Single-phase testing of three-phase regulators

Three-phase regulators may be tested with single-phase voltage. The specified test voltage is induced, successively, from each line terminal to ground and to adjacent line terminals. The neutrals of the windings may or may not be held at ground potential during these tests. A separate single-phase test or three-phase test may be required when the test voltage between adjacent line terminals is higher than the test voltage from the line terminals to ground.

8.6.7 Insulation power factor tests

Insulation power factor is the ratio of the power dissipated in the insulation, in watts, to the product of the effective voltage and current in voltamperes when tested under a sinusoidal voltage and prescribed conditions.

8.6.7.1 Preparation for tests

The test specimen shall have the following:

a) All windings immersed in insulating liquid.
b) All windings short-circuited.
c) All bushings in place.
d) Temperature of windings and insulating liquid near the reference temperature of 20 °C.

8.6.7.2 Instrumentation

Insulation power factor may be measured by special bridge circuits or by the voltampere-watt method. The accuracy of measurement should be within ±0.25% insulation power factor and the measurement should be made at or near a frequency of 60 Hz.

8.6.7.3 Voltage to be applied

The voltage to be applied for measuring insulation power factor shall not exceed half of the low-frequency test voltage given in Table 10 for any part of the winding, or 10 000 V, whichever is lower.

8.6.7.4 Procedure

Insulation power factor tests shall be made from windings to ground and between windings as shown in Table 15.

Copyright © 2000 IEEE. All rights reserved.

Copyright The Institute of Electrical and Electronics Engineers, Inc.
Provided by IHS under license with IEEE
No reproduction or networking permitted without license from IHS
Not for Resale

Table 15—Measurements to be in insulation power factor tests

Method 1—Test without guard circuit[a]	Method 2—Test with guard circuit[a]
Regulators with shunt and series windings only Shunt and series windings to ground	Regulator with utility winding Shunt and series windings to utility winding and ground Shunt and series windings to ground, guard on utility winding Utility winding to shunt and series winding and ground Utility winding to ground, guard on shunt and series winding
Regulators with utility winding Shunt and series windings to utility winding and ground Utility winding to ground Shunt and series winding to ground	

[a]In this table, the term *guard* signifies one or more conducting elements arranged and connected on an electrical instrument or measuring circuit so as to divert unwanted currents from the measuring means.

NOTES

1—While the real significance that can be attached to the power factor of liquid-immersed regulators is still a matter of opinion, experience has shown that power factor is helpful in assessing the probable condition of the insulation when good judgment is used.

2—In interpreting the results of power factor test values, the comparative values of tests taken at periodic intervals are useful in identifying potential problems rather than an absolute value of power factor.

3—A factory power factor test will be of value for comparison with field power factor measurements to assess the probable condition of the insulation. It has not been feasible to establish standard power factor values for liquid-immersed regulators for the following reasons:

a) Experience has indicated that little or no relation exists between power factor and the ability of the regulator to withstand the prescribed dielectric tests.
b) Experience has shown that the variation in power factor with temperature is substantial and erratic so that no single correction curve will fit all cases.
c) The various liquids and insulating materials used in regulators result in large variations in insulation power-factor values.

8.6.7.5 Temperature correction factors

Temperature correction factors for the insulation power factor depend upon the insulating materials, their structure, moisture content, and so forth. Values of correction factor *K*, given in Table 16, are typical and satisfactory for practical purposes and for use in the following equation:

$$F_{p20} = \frac{F_{pt}}{K} \tag{17}$$

where

F_{p20} is the power factor corrected to 20 °C,
F_{pt} is the power factor measured at *T,*
T is the test temperature (°C),
K is the correction factor.

Insulation temperature may be considered to be that of the average liquid temperature. When insulation power factor is measured at a relatively high temperature and the corrected values are unusually high, the regulator should be allowed to cool and the measurements should be repeated at or near 20 °C.

NOTE—The correction factors listed in Table 16 are based on insulation systems using mineral oil as an insulating liquid. Other insulating liquids may have different corrections factors.

Copyright © 2000 IEEE. All rights reserved.
Copyright The Institute of Electrical and Electronics Engineers, Inc.
Provided by IHS under license with IEEE
No reproduction or networking permitted without license from IHS
Not for Resale

Table 16—Temperature correction factors

Test temperature *T* (°C)	Correction factor *K*
10	0.80
15	0.90
20	1.00
25	1.12
30	1.25
35	1.40
40	1.55
45	1.75
50	1.95
55	2.18
60	2.42
65	2.70
70	3.00

8.6.8 Insulation resistance tests

Insulation resistance tests are made to determine the insulation resistance from individual windings to ground or between individual windings. The insulation resistance in such tests is commonly measured in megaohms, or may be calculated from measurements of applied voltage and leakage current.

NOTES

1—The insulation resistance of electrical apparatus is of doubtful significance compared with the dielectric strength. It is subject to wide variation in design, temperature, dryness, and cleanliness of the parts. When the insulation resistance falls below prescribed values, it can, in most cases of good design and where no defect exists, be brought up to the required standard by cleaning and drying the apparatus. The insulation resistance, therefore, may afford a useful indication as to whether the apparatus is in suitable condition for application of dielectric test.

2—The significance of values of insulation resistance tests generally requires some interpretation, depending on the design and the dryness and cleanliness of the insulation involved. When a user decides to make insulation resistance tests, it is recommended that insulation resistance values be measured periodically (during maintenance shutdown) and that these periodic values be plotted. Substantial variations in the plotted values of insulation resistance should be investigated for cause.

3—Insulation resistances may vary with applied voltage and any comparison shall be made with measurements at the same voltage.

4—Under no conditions should tests be made while the regulator is under vacuum.

8.6.8.1 Preparation for tests

The test specimen shall have

a) All windings immersed in insulating liquid.
b) All windings short-circuited.

Copyright © 2000 IEEE. All rights reserved.

Copyright The Institute of Electrical and Electronics Engineers, Inc.
Provided by IHS under license with IEEE
No reproduction or networking permitted without license from IHS
Not for Resale

c) All bushings in place.

d) Temperature of windings and insulating liquid near the reference temperature of 20 °C.

8.6.8.2 Instrumentation

Insulation resistance may be measured using the following equipment:

a) A variable voltage dc power supply with means to measure voltage and current (generally in micro-amperes or milliamperes).

b) A megohmeter.

NOTE—Megohmeters are commonly available with nominal voltages of 500 V, 1000 V, and 2500 V; dc applied test equipment is available at higher voltages.

8.6.8.3 Voltage to be applied

The dc voltage applied for measuring insulation resistance to ground shall not exceed a value equal to the rms low-frequency applied voltage allowed in Table 10.

NOTES

1—Partial discharges should not be present during insulation resistance tests, since they can damage a regulator and may also result in erroneous values of insulation resistance.

2—When measurements are to be made using dc voltages exceeding the rms operating voltage of the windings involved (or 1000 V for a solidly grounded wye winding), a relief gap may be employed to protect the insulation.

8.6.8.4 Procedure

a) Insulation resistance tests shall be made with all above-ground circuits of equal voltage connected together. Circuits or groups of circuits of different voltage above ground shall be tested separately.

b) Voltage should be increased in increments of usually 1–5 kV and held for 1 min while current is read.

c) The test should be discontinued immediately in the event the current begins to increase without stabilizing.

d) After the test has been completed, all terminals should be grounded for a period of time sufficient to allow any trapped charges to decay to a negligible value.

8.7 Temperature rise

See IEEE Std C57.12.00-1993 for conditions under which temperature limits apply. The regulators shall be tested in the combination of connections and taps that give the highest winding temperature rises as determined by the manufacturer and reviewed by the purchaser's representative when available. This will generally involve those connections and taps resulting in the highest losses.

All temperature rise tests shall be made under normal (or equivalent to normal) conditions of the means of cooling. These conditions are as follows:

a) Regulators shall be completely assembled and filled to the proper liquid level.

b) When the regulators are equipped with thermal indicators, bushing-type current transformers, or the like, such devices shall be assembled with the regulator.

c) The temperature rise test shall be made in a room that is as free from drafts as practicable.

Copyright © 2000 IEEE. All rights reserved.
Copyright The Institute of Electrical and Electronics Engineers, Inc.
Provided by IHS under license with IEEE
No reproduction or networking permitted without license from IHS
Not for Resale

8.7.1 Ambient temperature measurement

8.7.1.1 Air-cooled regulators

For air-cooled regulators, the ambient temperature shall be taken as that of the surrounding air, which shall not be less than 10 °C nor more than 40 °C. For temperatures within this range, no correction factor shall be applied. Tests may be made at temperatures outside this range when suitable correction factors are available.

The temperature of the surrounding air shall be determined by at least three thermocouples or thermometers in containers spaced uniformly around the regulator under test. They shall be located at about half the height of the regulator and at a distance of 1–2 m (3–6 ft) from the regulator. They shall be protected from drafts and from radiant heat from the regulator under test or other sources.

When the time constant of the regulator as calculated according to IEEE Std C57.95-1984 is 2 h or less, the time constant of the containers shall be between 50% and 150% of that of the regulator under test. When the time constant of the regulator under test is more than 2 h, the time constant of the containers shall be within 1 h of that of the regulator under test.

The time constant of the containers shall be taken as the time necessary for its temperature to change 6.3 °C when the ambient temperature is abruptly changed by 10 °C.

8.7.1.2 Water-cooled regulators

For water-cooled regulators, the flow rate in liters per minute (gallons per minute) and the temperature of the incoming and outgoing water shall be measured.

The ambient temperature shall be taken as that of the incoming water, which shall not be less than 20 °C nor more than 30 °C. For temperatures within this range, no correction factor shall be applied. Tests may be made at temperatures outside this range when suitable correction factors are available.

8.7.2 Liquid rise measurement

a) Liquid temperature rise is the difference between liquid temperature and the ambient temperature. The ultimate liquid temperature rise above ambient shall be considered reached when the temperature rise does not vary more than 2.5% or 1 °C, whichever is greater, during a consecutive 3 h period. It is permissible to shorten the time required for the test by the use of initial overloads, restricted cooling, or the like.

b) The top liquid temperature shall be measured by a thermocouple or suitable thermometer immersed approximately 50 mm (2 in) below the top liquid surface.

c) The average liquid temperature shall be taken to be equal to the top liquid temperature minus half the difference in temperature of the moving liquid at the top and the bottom of the cooling means. Where the bottom liquid temperature cannot be measured directly, the temperature difference may be taken to be the difference between the surface temperature of the liquid inlet and outlet of the regulator's external cooling path.

d) A thermocouple is the preferred method of measuring surface temperature. (See 8.7.4 for method of measurement.)

8.7.3 Average winding temperature rise measurement

The average temperature rise of a winding shall be the average winding temperature minus the ambient temperature.

Copyright © 2000 IEEE. All rights reserved.

Copyright The Institute of Electrical and Electronics Engineers, Inc.
Provided by IHS under license with IEEE
No reproduction or networking permitted without license from IHS
Not for Resale

The average temperature of the winding shall be determined by the resistance method. Where the use of the resistance method is impossible (for example, with extremely low-resistance windings) other methods may be used. Readings should be taken as soon as possible after shutdown, allowing sufficient time for the inductive effects to disappear as indicated by the cold-resistance measurement. The time from the instant of shutdown for each resistance measurement shall be recorded. Fans and cooling water shall be shut off during shutdown for resistance measurement. Oil pumps may be shut off or left running during shutdown for resistance measurement. The average temperature of a winding shall be determined by the following formula:

$$T = \left(\frac{R}{R_0}\right)(T_k + T_0) - T_k \tag{18}$$

where

T is the temperature in °C, corresponding to hot resistance R,
T_0 is the temperature in °C at which cold resistance R_0 was measured,
R_0 is the cold resistance (W), measured according to 8.1,
R is the hot resistance (Ω),
T_k is 234.5 °C (copper),
T_k is 225.0 °C (aluminum).

NOTE—225 °C applies for pure or EC aluminum. T_k may be as high as 230 °C for alloyed aluminum. Where copper and aluminum windings are employed in the same regulator, a value for T_k of 229 °C should be applied for the correction of losses.

8.7.3.1 Temperature correction to instant of shutdown

Either of two correction factor procedures shall be used, depending upon the winding load loss density. For these determinations, the winding load loss density for the winding connection shall be taken as the sum of the calculated I^2R and eddy losses, or the winding at the rated temperature rise plus 20 °C divided by the calculated conductor weight of the connected winding.

8.7.3.1.1 Empirical method

This method may be used for regulators typical of those built to the specification of this standard when the load loss of the winding does not exceed 66 W/kg (30 W/lb) for copper, or 132 W/kg (60 W/lb) for aluminum.

One reading of hot resistance shall be taken on each winding, with the time after shutdown recorded and the corresponding temperature determined.

All readings of hot resistance shall be made within 4 min of shutdown. If all required readings cannot be made within 4 min, the temperature test shall be resumed for 1 h, after which readings may again be taken.

The temperature correction to the instant of shutdown shall be an added number of degrees equal to the factor taken from Table 17 multiplied by the windings W/kg (W/lb). Factors for intermediate times may be obtained by interpolation.

When the load loss of the winding does not exceed 15 W/kg (7 W/lb) for copper, or 31 W/kg (14 W/lb) for aluminum, a correction of 1 °C/min may be used.

Copyright © 2000 IEEE. All rights reserved.
Copyright The Institute of Electrical and Electronics Engineers, Inc.
Provided by IHS under license with IEEE
No reproduction or networking permitted without license from IHS
Not for Resale

Table 17—Winding temperature correction factor

Time after shutdown (min)	Winding temperature correction factor			
	W/kg		W/lb	
	Copper	Aluminum	Copper	Aluminum
1	0.19	0.07	0.09	0.032
1.5	0.26	0.10	0.12	0.045
2	0.32	0.13	0.15	0.059
3	0.43	0.17	0.20	0.077
4	0.50	0.21	0.23	0.095

8.7.3.1.2 Cooling curve method

A series of at least four readings of resistance shall be made on one phase of each winding and the time recorded for each reading.

The first reading of each series shall be made as soon as the inductive effect has subsided and not more than 4 min after shutdown.

After a set of resistance readings has been taken, the run shall be resumed for a period of 1 h, after which further readings may be taken. This shall be repeated until all necessary readings have been taken.

The resistance/time data shall be plotted on suitable coordinate paper and the resulting curve extrapolated to obtain the resistance at the instant of shutdown. This resistance shall be used to calculate the average winding temperature at shutdown.

The resistance/time data obtained on one phase of a winding may be used to determine the correction back to shutdown for the other phases of the same winding, provided the first reading on each of the other phases has been taken within 4 min after shutdown.

8.7.4 Other temperature measurements

When measured, the temperature rise of metal parts other than windings shall be determined by use of a thermocouple or suitable thermometer.

A thermocouple is the preferred method of measuring surface temperature. When used for this purpose, the thermocouple should be soldered to the surface. When this is not practical, the thermocouple should be soldered to a thin metal plate or foil approximately 650 mm^2 (1 in^2). The plate should be held firmly and snugly against the surface. The thermocouple should be thoroughly insulated thermally from the surrounding medium.

The surface temperature of metal parts surrounding or adjacent to outlet leads or terminals carrying heavy current may be measured at intervals or immediately after shutdown.

8.7.5 Test methods

Test shall be made by one of the following methods:

a) Actual loading.
b) Simulated loading.

Copyright © 2000 IEEE. All rights reserved.

Copyright The Institute of Electrical and Electronics Engineers, Inc.
Provided by IHS under license with IEEE
No reproduction or networking permitted without license from IHS
Not for Resale

1) The short-circuit method, in which appropriate total losses are produced by the effect of short-circuit current.
2) The loading back (opposition) method, in which rated voltage and current are induced in the regulator under test.

8.7.5.1 Actual loading

The actual loading method is the most accurate of all methods, but its energy requirements are excessive for large regulators.

Regulators of small output may be tested under actual load conditions by loading them on a rheostat, a bank of lamps, a water box, and so forth.

8.7.5.2 Simulated loading

8.7.5.2.1 Short-circuit method

a) Short circuit one or more windings and circulate sufficient current at rated frequency to produce total losses for the connection and loading used. Total losses shall be those measured in accordance with 8.4 and 8.5 and converted to a temperature equal to the rated average winding temperature rise plus 20 °C.

b) Determine liquid rise as described in 8.7.2.

c) Immediately reduce the currents in the windings to the rated value for the connection and the loading used, hold constant for 1 h, measure liquid temperature, shut down, and measure the average winding temperature as described in 8.7.3. When test equipment limitations dictate, it is permissible to operate at a value lower than rated current, but not less than 85% of rated current.

d) Average winding rise shall be calculated by using either top liquid rise or average liquid rise. When other than rated winding current is used, the average liquid rise method shall be used to determine winding rises.

   1) In the top liquid rise method, the average winding temperature rise is equal to the top liquid rise, measured during the total loss run, plus the quantity (average winding temperature at shutdown minus top liquid temperature at shutdown).

   2) In the average liquid rise method, the average winding rise is the average liquid rise, measured during the total loss run, plus the quantity (average winding temperature at shutdown minus average liquid temperature at shutdown).

When the current held in any of the windings under test differs from the rated current, the observed differences between the average winding temperature at shutdown and the average liquid temperature at shutdown shall be corrected to give the average temperature rise of the windings at the rated current by using the following formula:

$$T_c = T_0\left[\frac{\text{rated current}}{\text{test current}}\right]^{2m} \tag{19}$$

where

T_c is the corrected difference between average winding temperature, corrected to shutdown, and the average liquid temperature at shutdown,
T_0 is the observed difference between average winding temperature, corrected to shutdown, and the average liquid temperature at shutdown,
m is 0.8 for Class ONAN and ONAF and nondirected-flow Classes OFAF and OFWF,
m is 1.0 for directed-flow Classes ODAF and ODWF.

Copyright © 2000 IEEE. All rights reserved.
Copyright The Institute of Electrical and Electronics Engineers, Inc.
Provided by IHS under license with IEEE
No reproduction or networking permitted without license from IHS
Not for Resale

The corrected average winding rise is the average liquid rise, measured during the total loss run, plus T_c.

8.7.5.2.2 Loading back method

Duplicate regulators may be tested by connecting their respective shunt and series windings in parallel (Figure 16 and Figure 17). Apply rated voltage at rated frequency to one set of windings. Circulate load current by opening the connections of either pair of windings at one point and impressing a voltage across the break just sufficient to circulate rated current through the windings. Obtain top fluid rise as described in 8.7.2, then shut down and measure winding rise as in 8.7.3. When load current at other than rated frequency is used, the frequency may not differ from rated frequency by more than 10%, and liquid rise shall be corrected using one of the following methods.

a) *By calculation*. This method may be used when actual loss is within 20% of the required loss.

$$T_d = T_b\left[\left(\frac{W}{w}\right)^n - 1\right] \tag{20}$$

where

T_d is the liquid rise correction in °C,
T_b is the observed liquid rise in °C,
W is the required loss (W),
w is the actual loss (W),
n is 0.8 for Class ONAN,
n is 0.9 for Class ONAF,
n is 1.0 for nondirected-flow Classes OFAF and OFWF and for directed-flow Classes ODAF and ODWF.

$$\text{Corrected liquid rise} = \text{observed liquid rise} + T_d \tag{21}$$

$$\text{Corrected winding rise} = \text{observed winding rise} + T_b \tag{22}$$

b) *By adjusting the losses*. When the top liquid rise approaches a constant condition, adjust the excitation voltage until the sum of the excitation loss and the load loss as measured during the temperature test equals the required loss. Obtain top fluid rise as described in 8.7.2.

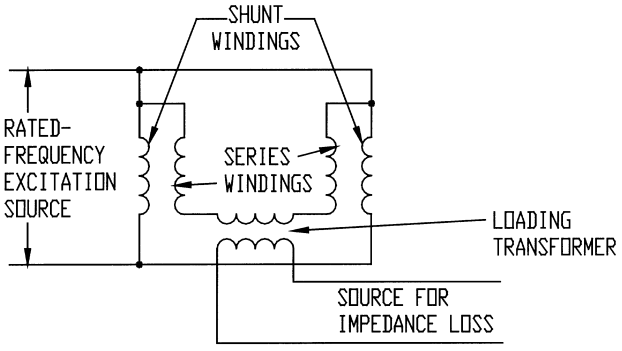

Figure 16—Example of loading back method: single-phase

--`,,-`-`,,`,,`,`,,`---
Copyright © 2000 IEEE. All rights reserved.

Copyright The Institute of Electrical and Electronics Engineers, Inc.
Provided by IHS under license with IEEE
No reproduction or networking permitted without license from IHS
Not for Resale

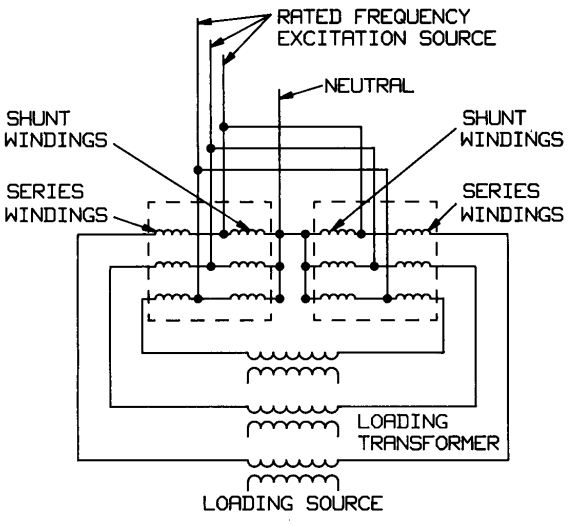

Figure 17—Example of loading back method: three-phase

8.7.6 Correction of temperature rises for differences in altitude

When tests are made at an altitude of 1000 m (3000 ft) or less, no altitude correction shall be applied to the temperature rises.

When a regulator tested at an altitude of less than 1000 m (3300 ft) is to be operated at an altitude above 1000 m (3300 ft), it shall be assumed that the temperature rises will increase in accordance with the following formula:

$$T_A = T_e\left(\frac{A}{A_0} - 1\right)F \tag{23}$$

where

T_A is the increase in temperature rise at altitude A meters (°C),
T_e is the observed temperature rise (°C),
A is altitude (m),
A_0 is 1000 m,
F is 0.04 (self-cooled mode),
F is 0.06 (forced-air-cooled mode).

8.8 Short-circuit tests

8.8.1 Scope

This test code applies to liquid-immersed step-voltage regulators, both single- and three-phase.

The code defines a procedure by which the mechanical capability of a voltage regulator to withstand short-circuit stresses may be demonstrated. The prescribed tests are not designed to verify thermal performance. Conformance to short-circuit thermal requirements shall be by calculation in accordance with 8.9.4.

Copyright © 2000 IEEE. All rights reserved.
Copyright The Institute of Electrical and Electronics Engineers, Inc.
Provided by IHS under license with IEEE
No reproduction or networking permitted without license from IHS
Not for Resale

The short-circuit test procedure described herein is intended principally for application to new regulators for the purpose of design verification. Tests may be conducted at a manufacturer's facilities, test laboratories, or in the field; but it shall be recognized that complete equipment is not usually available in the field for conducting tests and verifying results.

8.8.2 Test connections

8.8.2.1 Fault location

The short circuit should be applied on the voltage regulator regulated circuit terminals since this most closely represents a system fault condition. The short circuit shall be applied by means of suitable low-resistance connectors.

The tests may be conducted by either of the following:

a) Closing a breaker at the faulted terminal to apply a short circuit to the previously energized voltage regulator.
b) Closing a breaker at the source terminal to apply energy to the previously short-circuited voltage regulator.

8.8.2.2 Fault type

The type of fault to be applied will be dependent on the available energy source. Any of the following may be used for three-phase regulators:

a) *Three-phase source:* three-phase short circuit.
b) *Three-phase source:* single-phase-to-ground short circuit.
c) *Single-phase source:* simulated three-phase short circuit.

NOTE—Apply the source to one primary circuit terminal. Apply the fault to the other two phases connected together. (Alternatively, the source may be connected to two phases connected together and the fault be connected to the output side of the remaining phase.)

d) *Single-phase source:* single-phase short circuit on one phase at a time. This applies to all single-phase regulators.

8.8.2.3 Tap connection for test

One test satisfying the asymmetrical current requirement shall be made with the voltage regulator at the maximum boost position and also at the maximum buck position. Two tests satisfying the symmetrical current requirement shall be made at the maximum boost position and also at the maximum buck position.

8.8.3 Test requirements

8.8.3.1 Symmetrical current requirements

The rms symmetrical short-circuit current shall have a magnitude equal to 25 times the base current of the voltage regulator. When specified for three-phase regulators rated 500 kVA per phase and below, the rms symmetrical short circuit current shall have magnitude equal to 40 times the base rated load current or 20 000 A, whichever is less. When specified for single-phase regulators rated 500 kVA and below, the rms symmetrical short-circuit shall have a magnitude equal to 40 times the base rated load current or 20 000 A, whichever is less. The base rated load current is the rated self-cooled load current of the voltage regulator.

Copyright © 2000 IEEE. All rights reserved.

Copyright The Institute of Electrical and Electronics Engineers, Inc.
Provided by IHS under license with IEEE
No reproduction or networking permitted without license from IHS
Not for Resale

8.8.3.2 Asymmetrical current requirements

The initial current shall have a 1.6 offset from zero, resulting in a maximum crest value equal to 2.26 times the required rms symmetrical short-circuit current.

8.8.3.3 Number of tests

Each phase of the voltage regulator shall be subjected to a total of six tests. Four of these tests should satisfy the symmetrical current requirements. Two additional tests on each phase shall satisfy the asymmetrical current requirements.

8.8.3.4 Duration of tests

The duration of each test shall be 15 complete cycles of rated frequency current.

8.8.4 Test procedure

8.8.4.1 Fault application

To produce the fully asymmetrical current wave specified in 8.8.3.2, a synchronous switch should be used to control the timing of fault application.

8.8.4.2 Calibration tests

Calibration tests to establish required source voltage or switch closing times should be made at voltage levels not greater than 50% of the value that would produce the specified symmetrical short-circuit current. For field testing, calibration tests should be made at reduced voltage levels, if possible. Tests with voltage equal to or greater than that required to produce 95% of the specified symmetrical short-circuit current may be counted toward fulfillment of the required number of tests.

8.8.4.3 Terminal voltage limits

When tests are to be made by applying the short circuit to the energized voltage regulator, the no-load source voltage shall not exceed 110% of the rated voltage, unless otherwise approved by the manufacturer.

Throughout the course of any test, the voltage at the regulator primary circuit terminals shall be maintained within a range of 95–105% of that necessary to produce the required symmetrical short-circuit current as determined in 8.8.3.1.

8.8.4.4 Temperature limits

The top liquid temperature at the start of the test shall be between 0 °C and 40 °C.

8.8.4.5 Current measurements

Current magnitudes shall be measured in the low-resistance connection between the shorted regulated circuit terminals and on the regulator primary circuit terminals connected to the energy source. The maximum rms symmetrical current shall be established as half of the peak-to-peak envelope of the current wave, measured at the midpoint of the second cycle of test current. The first cycle peak asymmetrical currents shall be measured directly from the oscillograms of the terminal currents.

Copyright © 2000 IEEE. All rights reserved.
Copyright The Institute of Electrical and Electronics Engineers, Inc.
Provided by IHS under license with IEEE
No reproduction or networking permitted without license from IHS
Not for Resale

8.8.4.6 Tolerances on required currents

The measured currents, symmetrical or asymmetrical, in the tested phase or phases shall not be less than 95% of the required current.

8.8.4.7 Tap-changing switch operation

Upon completion of each of the required short-circuit tests, the tap-changing switch shall be operated from the test position through the neutral position, and then back to the test position or on to the next test position.

8.8.5 Proof of satisfactory performance

The voltage regulator under test shall be judged to have performed satisfactorily if the visual examination (8.8.5.1) and dielectric test (8.8.5.2) criteria have been satisfactorily met. Subclauses 8.8.5.3 through 8.8.5.7 list recommended terminal measurements that can be made during the course of the tests, but are not required to be made unless specified. When the terminal measurements are made and the requirements of 8.8.5.3 through 8.8.5.7 have been met following all tests, it is probable that the voltage regulator has sustained no mechanical damage during the test series. A composite evaluation of the degree to which all criteria of 8.8.5.3 through 8.8.5.7 have been met may indicate the need for a greater or lesser degree of visual examination to confirm satisfactory performance. The evidence may be sufficient to permit a judgment of satisfactory performance to be made without complete dielectric tests. A decision to waive all or part(s) of the visual inspection or dielectric test criteria shall be based upon discussion and negotiation of all parties involved in specification and performance of short-circuit tests.

8.8.5.1 Visual inspection

Visual inspection of the core and coils shall give no indication that there has been any change in mechanical condition that will impair the function of the voltage regulator. The extent of the visual inspection shall be established on the basis of combined evidence obtained from the terminal measurements described in 8.8.5.3 through 8.8.5.7. When the terminal measurements give no indication of change in condition, external inspection of the core and coils removed from the tank may suffice. Any evidence of change in condition from more than one of the terminal measurements warrants disassembly of the windings from the core for a more detailed inspection.

Visual inspection of the tap-changing switch shall indicate no change that will impair the switch function. The extent of this examination shall be established on the basis of operation through neutral after each test. When the tap-changing switch operates successfully through neutral after each test, then an inspection of the switch as assembled may suffice.

8.8.5.2 Dielectric tests

The regulator shall withstand standard dielectric tests in accordance with 8.6, at the full specification level following the short-circuit test series. Impulse tests shall be made following the short-circuit test series only when specified.

8.8.5.3 Wave shape of terminal voltage and current

No abrupt changes shall occur in the terminal voltage or short-circuit current wave shapes during any test.

8.8.5.4 Leakage impedance

Leakage impedance measured on a per-phase basis after the test series, and measured at pre-test temperature, shall not differ from that measured before the test series by more than 22.5%.

Copyright © 2000 IEEE. All rights reserved.

Copyright The Institute of Electrical and Electronics Engineers, Inc.
Provided by IHS under license with IEEE
No reproduction or networking permitted without license from IHS
Not for Resale

8.8.5.5 Acceptable conditions

Small changes (less than 5% of amplitude or phase angle) occur following one of the short-circuit tests, but no of amplitude or phase angle occurs following one of the short-circuit tests, but the trace returns to its original shape on subsequent test.

8.8.5.6 Conditions requiring further investigations

Small changes (greater than 5% of amplitude or phase angle) occur after the first full amplitude short-circuit test, and these changes continue to grow with each subsequent test.

8.8.5.7 Excitation current

Excitation current measured after the test series shall not increase above that measured before the test series by more than 5% for stacked-type cores. For voltage regulators with wound-core construction the increase shall not exceed 25%. The measuring equipment shall have demonstrated capability of giving reproducible readings with a minimum accuracy of ±5%.

8.8.5.8 Other diagnostic measurements

Other diagnostic measurements may be made during the course of the tests to evaluate whether there have been any sudden or progressive changes in the mechanical condition of the voltage regulator. Such results may be useful to the understanding of the response to short-circuit forces, but they shall not form part of the proof criteria.

8.9 Data

8.9.1 Reference temperature

The reference temperature for determining total losses, voltage regulation, and efficiency shall be equal to the sum of the rated average winding temperature rise by resistance plus 20 °C.

8.9.2 Losses and excitation current

8.9.2.1 Determination of no-load losses and exciting current

No-load losses and exciting current shall be determined for the rated voltage and frequency on a sine-wave basis unless a different form is inherent in the operation of the regulator.

8.9.2.2 Load losses

Load losses shall be determined for rated voltage, current, and frequency and shall be corrected to the reference temperature.

8.9.2.3 Total losses

Total losses are the sum of the no-load losses and the load losses.

8.9.3 Efficiency

The efficiency of a regulator is the ratio of its useful power output to its total power input, exclusive of pumps, fans, and other ancillary devices.

--`,,`-`-`,,`,,`,`,,`---

Copyright © 2000 IEEE. All rights reserved.
Copyright The Institute of Electrical and Electronics Engineers, Inc.
Provided by IHS under license with IEEE
No reproduction or networking permitted without license from IHS
Not for Resale

$$\text{Efficiency} = \left(\frac{\text{output}}{\text{input}}\right) = \frac{(\text{input} - \text{losses})}{\text{input}} = 1 - \left(\frac{\text{losses}}{\text{input}}\right) = 1 - \left[\frac{\text{losses}}{(\text{output} + \text{losses})}\right] \quad (24)$$

When specified, efficiency shall be calculated on the basis of the reference temperature for the average winding temperature rise of the regulator. If pumps or fans are supplied, the power requirements shall be provided as supplementary data.

8.9.4 Winding temperature during a short-circuit

The final winding temperature, T_f, at the end of a short-circuit of duration, t, shall be calculated on the basis of all heat stored in the conductor material and its associated turn insulation. T_f shall not exceed the limiting temperature in 5.8.3. All temperatures are in degrees Celsius.

$$T_f = (T_k + T_s)m(1 + e + 0.6m) + T_s \quad (25)$$

where

$$m = \frac{W_s t}{[C(T_k + T_s)]} \quad (26)$$

Equations (25) is an approximate formula, and its use should be restricted to values of $m = 0.6$ and less.

For values of m in excess of 0.6, the following more nearly exact formula should be used:

$$T_f = (T_k + T_s)[\sqrt{\varepsilon^{2m} + (e\varepsilon^{2m} - 1)} - 1] + T_s \quad (27)$$

where

T_k is 234.5 °C (copper),
T_k is 225 °C (aluminum).

NOTE—225 °C applies for pure or EC aluminum. T_k may be as high as 230 °C for alloyed aluminum. Where copper and aluminum windings are employed in the same regulator, a value for T_k of 229 °C should be applied for the correction of losses.

T_s is the starting temperature equal to
1) 30 °C ambient temperature plus the average winding rise plus the manufacturer's recommended hottest spot allowance, or
2) 30 °C ambient temperature plus the limiting winding hottest spot temperature rise specified for the appropriate type of regulator.

e is the per unit eddy-current loss, based on resistance loss, W_s, at the starting temperature

$$e = e_r\left[\frac{T_k + T_r}{T_k + T_s}\right]^2 \quad (28)$$

where

e_r is the per unit eddy-current loss at reference temperature,
e is the base of natural logarithms, approximately = 2.718,
T_r is the reference temperature = 20 °C ambient temperature plus rated average winding rise,
W_s is the short-circuit resistance loss of the winding at the starting temperature, in watts per pound of conductor material.

Copyright © 2000 IEEE. All rights reserved.

Copyright The Institute of Electrical and Electronics Engineers, Inc.
Provided by IHS under license with IEEE
No reproduction or networking permitted without license from IHS
Not for Resale

$$W_s = \frac{W_r N^2}{M}\left[\frac{T_k + T_{rs}}{T_k + T_{sr}}\right] \quad (29)$$

where

W_r is the resistance loss of winding at rated current and reference temperature (W),
N is the symmetric short-circuit magnitude in times normal rated current,
M is the weight of winding conductor (lb),
C is the average thermal capacitance per pound of conductor material and its associated turn insulation (W·s/°C). It shall be determined by iteration from either of the following empirical equations:

$$C = 174 + 0.225(T_s + T_f) + 110\frac{A_i}{A_c} \text{ for copper} \quad (30)$$

$$C = 405 + 0.1(T_s + T_f) + 360\frac{A_i}{A_c} \text{ for aluminum} \quad (31)$$

where

A_i is the cross-sectional area of turn insulation,
A_c is the cross-sectional area of conductor.

8.9.5 Certified test data

Minimum information to be included in certified test data includes the following:

a) *Order data*
1) Purchaser
2) Purchaser's order number
3) Manufacturer's production order number and serial number

b) *Rating data*
1) Type
2) Cooling class
3) Number of phases
4) Connections (delta, wye, etc.)*
5) Frequency
6) Insulation medium
7) Temperature rise
8) Winding ratings: voltage, voltampere, BIL, all temperature rise ratings specified, including future ratings*
9) Harmonic factor if other than standard*

c) *Test and calculated data* (by individual serial number. If the results are from another regulator that has been "design" tested, provide serial number, kV and kVA ratings, and date of test.)
1) Date of test
2) Winding resistances*
3) Losses: no-load, load and total
4) Impedances in percent (%)
5) Excitation current in percent (%)

Copyright © 2000 IEEE. All rights reserved.
Copyright The Institute of Electrical and Electronics Engineers, Inc.
Provided by IHS under license with IEEE
No reproduction or networking permitted without license from IHS
Not for Resale

6) Thermal performance data*
   i) Ambient temperature
   ii) Tap position, total loss, and line currents for total loss run
   iii) Oil flow in winding (directed and non-directed)
   iv) Final bottom and top oil temperature rise over ambient for total loss run for each test
   v) Average winding temperature rise over ambient for each winding for each test
   vi) Calculated winding hottest spot temperature rise over ambient for maximum rating
7) Zero-sequence impedance*
8) Regulation (calculated)*
9) Applied voltage test values for each winding
10) Induced voltage test value
11) Impulse test data per IEEE Std C57.98-1993*
12) Sound level test results*
13) Short-circuit test results*
14) Ratio test results*
15) Polarity test results*
16) Other special test results*

d) *Certification statement and approval.*

NOTES

1—Items identified with * are not required for regulators unless specified by the user.

2—Number of significant figures of reported data should reflect the level of confidence of the data accuracy.

3—All temperature sensitive data should be reported after correcting to reference temperature (defined in 8.9.1).

4—Other significant information, such as tap position during induced potential test, test connection used, and any particular method used when alternatives are allowed, should be included.

5—Other drawings, such as nameplate and outline, may be made a part of certified test data in place of duplicating the same information.

9. Control systems

9.1 General

The control system of a regulator is composed of sensing apparatus to provide signals proportioned to the system voltage and load current, and a control device that interprets the output of the sensing apparatus, relates this input to conditions desired by the operator, and automatically commands the regulator to function to hold the output thereby required.

The total control system is usually furnished as a complete package with the regulator; however, the usual stand-alone nature of the control device portion of the control system makes it appropriate to consider the control system in a unified context.

9.2 Control device construction

9.2.1 Setpoint adjustment ranges

The control device shall permit parameter adjustment as follows:

--`,,`-`-`,,`,,`,`,,`---

Copyright © 2000 IEEE. All rights reserved.

Copyright The Institute of Electrical and Electronics Engineers, Inc.
Provided by IHS under license with IEEE
No reproduction or networking permitted without license from IHS
Not for Resale

a) Voltage level setting adjustable from at least 108–132 V (related to line voltage by voltage supply ratio as defined in Table 9).

b) Bandwidth setting adjustable from at least 1.5–3.0 V (total range).

c) Actuation time delay setting adjustable from at least 15–90 s. (The time delay applies only to the first required change if subsequent changes are required to bring the system voltage within the bandwidth setting.)

d) Line drop compensation adjustment including independently adjustable resistance and reactance adjustable in the range of at least –24 V to 24 V. (The voltage refers to line drop compensation at the nominal control base voltage of 120 V and rated base current of 0.2 A. It is not required to provide negative resistance and negative reactance compensation simultaneously.)

9.2.2 Components and accessories

The following components and accessories will be provided as part of the control device:

a) Test terminals for measuring voltage proportional to regulator output voltage. (The test terminal voltage should not be changed more than ±1% by connecting a burden of 25 VA at 0.7 power factor across the test terminals, unless otherwise specified. Extra burden is not included in the specification of accuracy of the control relays.)

b) Manual-automatic control switch.

c) Manual raise/lower switch(es).

d) Neutral position indicator independent of the tap-changer position indicator.

e) External source terminals.

f) Internal/external power switch to allow operating the regulator from an external source. (This switch shall not allow any regulator winding to be energized when in the external position and with an external source connected to the external source terminals.)

g) Operation counter to indicate accumulated number of tap-changer operations;

h) Ability to withstand –40 °C to 85 °C control enclosure temperature without loss of control.

i) Band limit indication means.

9.3 Control system requirements

9.3.1 Accuracy

The control system of a regulator shall have an overall system error not exceeding ±1%. The accuracy requirement is based on the combined performance of the control device and sensing apparatus, including instrument current and voltage transformers, utility windings, transducers, and so forth, with the voltage and current input signals of a sinusoidal wave shape.

Since it is not practical to test the overall control system accuracy, it is permissible to individually test the control system components and then add their accuracies together to arrive at the overall control system accuracy. Accuracy tests are design tests, which are not made on every unit. The test voltage and current signals should have a sinusoidal wave shape. No analytical correction is permitted to remove effects of harmonics in the accuracy test results.

Copyright © 2000 IEEE. All rights reserved.
Copyright The Institute of Electrical and Electronics Engineers, Inc.
Provided by IHS under license with IEEE
No reproduction or networking permitted without license from IHS
Not for Resale

9.3.1.1 Sensing apparatus

9.3.1.1.1 Voltage source

The voltage source accuracy shall be determined on a nominal secondary voltage base of 120 V and a burden of 10 VA. Refer to IEEE Std C57.13-1993.

9.3.1.1.2 Current source

The current source accuracy shall be determined on a nominal 0.2 A secondary current and a burden of 3.5 VA. Refer to IEEE Std C57.13-1993.

9.3.1.2 Control device

The accuracy of the control device shall be determined at an ambient temperature of 25 °C, rated frequency, a nominal input voltage of 120 V, and a base current of 0.2 A at unity power factor and at zero power factor lagging.

NOTE—The user should be aware that harmonic distortion of the control device input voltage and/or current can result in differences in the sensed average or rms magnitude, which will affect the overall accuracy of the control device and control system. Such differences are inherent in the product design and do not constitute an additional error in the context of control accuracy.

9.3.1.2.1 Errors

Each individual error-producing parameter is stated in terms of its effect on the response of the control device and is determined separately with the other parameters held constant. Errors causing the control device to hold a higher voltage level than the reference value are plus errors, and those causing a lower voltage level are minus errors. The overall error of the control device is the sum of the individual errors as separately determined; the overall error causes a divergence from the voltage level setting presuming a bandwidth of zero volts.

9.3.1.2.2 Factors for accuracy determination of control device

The greater magnitude of the sum of the positive or negative errors of the following three areas shall constitute the accuracy of the control device:

a) Variations in ambient temperature of the control environment between –30 °C and 65 °C.
b) Frequency variation of ±0.25% in rated frequency (0.15 Hz for 60 Hz voltage regulator).
c) Line drop compensation.
    1) Resistance compensation of 12 V and an in-phase base current of 0.2 A with reactance compensation of zero.
    2) Resistance compensation of 12 V and a 90° lagging base current of 0.2 A with reactance compensation of zero.
    3) Reactance compensation of 12 V and an in-phase base current of 0.2 A with resistance compensation of zero.
    4) Reactance compensation of 12 V and a 90° lagging base current of 0.2 A with resistance compensation of zero.

Copyright © 2000 IEEE. All rights reserved.

Copyright The Institute of Electrical and Electronics Engineers, Inc.
Provided by IHS under license with IEEE
No reproduction or networking permitted without license from IHS
Not for Resale

9.4 Tests

9.4.1 Design tests

9.4.1.1 Accuracy

9.4.1.1.1 Procedure for determination of accuracy of control device

This subclause outlines procedures for determining values of errors contributed by the factors described in 9.3.1.2.2. The voltage and current sources applied may be as free of harmonics or other distortions as the test facility permits.

9.4.1.1.2 Tests for errors in voltage level

With the control device set at a voltage level of 120 V and at an ambient temperature of 25 °C, energize the control device for 1 h using a 120 V source of rated frequency. The control is calibrated at this point. Errors in voltage level in three tests below will determine the control device accuracy.

a) *Tests for error in voltage level due to temperature*. The control device shall be tested over a temperature range of –30 °C to 65 °C in not more than 20 °C temperature increments. The air temperature surrounding the control device shall be held constant and uniform within ±1 °C of each increment for a period of not less than 1 h before taking a test reading. Tests are made at rated frequency with zero current in the line drop compensation circuit.

b) *Tests for error in voltage level due to frequency.* The control device shall be tested over a sufficient range of frequencies to accurately determine the error over the specified range of rated frequency, ±0.25%. Tests are made at a constant temperature of 25 °C with zero current in the line drop compensation circuit.

c) *Tests for errors in voltage level due to line drop compensation*. Four tests shall be made at rated frequency and a constant temperature of 25 °C and a voltage level setting of 120 V. Determine the voltage level required to balance the control with 0.2 A in the compensator circuit of the control under the conditions specified in Table 18.

Table 18—Voltage-level values for select line drop compensation settings

Test	Set LDC-R (V)	Set LDC-X (V)	Current phasing	Determine voltage error relative to expected (V)
1	12	0	in-phase	$V = 132.0$
2	0	12	in-phase	$V = 120.6$
3	12	0	90° lagging	$V = 120.6$
4	0	12	90° lagging	$V = 132.0$

Use the individual test error (plus or minus) that produces the largest overall error magnitude when summed per 9.3.1.2.1.

9.4.1.2 Set point marks

Deviation of set point marks for voltage level, bandwidth, line drop compensation, and time delay settings are not considered as a portion of the errors in determining the accuracy classification.

Copyright © 2000 IEEE. All rights reserved.
Copyright The Institute of Electrical and Electronics Engineers, Inc.
Provided by IHS under license with IEEE
No reproduction or networking permitted without license from IHS
Not for Resale

9.4.1.2.1 Bandwidth center marking deviation

The difference between the actual bandwidth center voltage and the marked value at any setting over the range of 120 V ±10% shall not exceed ±1%.

9.4.1.2.2 Bandwidth marking deviation

The difference between the actual bandwidth voltage and the marked value shall not exceed ±10% of the marked value set.

9.4.1.2.3 Compensator marking deviation

The arithmetic difference between the actual compensation voltage expressed as a percent of 120 V, and the marked value of any setting of either the resistance or reactance element of the compensator (expressed as a percent of 120 V, with 0.2 A in the compensator circuit) shall not exceed ±1%.

9.4.1.2.4 Time delay set marking deviation

The difference between the actual time delay and the marked value of any setting shall not exceed ±2 s or ±10%, whichever is greater, when initiated with no stored delay in an integrating-type circuit.

9.4.1.3 Surge withstand capability test

9.4.1.3.1 General

The surge withstand capability (SWC) test is a design test for the control device in its operating environment. In order to pass this test the control device and regulator shall continue to operate properly and not cause any unintentional tap change during or after the test. Refer to IEEE Std C37.90.1-1989.

9.4.1.3.2 Devices to be tested

The devices that make up the control system vary depending on the requirements of the user. The requirements for SWC tests vary with the application. The following examples spell out certain specifics:

a) A regulator with a control mounted on the tank or on the pole at ground level below the regulator and with no circuits except the power conductors and a cable from the regulator to the control. (The control system would be both control and the regulator. Since there are no other control conductors connected to the system, there is no SWC test required. The power system line conductor connections are otherwise covered and hence fall beyond this requirement.)

b) A regulator mounted as in item a) but with potential device, control, or metering conductors being connected into the control. (These conductors would be subject to the SWC test requirements.)

c) A control mounted remotely with potential device, control, or metering connections to the control device. (Here, all conductors connected to the control, including those to the regulator, would be subject to the SWC test.)

d) If the foregoing examples do not adequately cover the application, the manufacturer and purchaser shall agree on the connection scheme and the tests to be applied.

Copyright © 2000 IEEE. All rights reserved.

Copyright The Institute of Electrical and Electronics Engineers, Inc.
Provided by IHS under license with IEEE
No reproduction or networking permitted without license from IHS
Not for Resale

9.4.2 Routine tests

9.4.2.1 Applied voltage

The control device shall withstand a dielectric test voltage of 1000 V, 60 Hz from all terminals to case for 1 min. The test shall be performed with the control totally disconnected from equipment. After the test, it shall be determined that no change in calibration or performance has occurred.

NOTE—To prevent excessive damage or failure, use of a resistor to limit the current is suggested

9.4.2.2 Operation

All features of the control device and its peripherals will be operated and checked for verification of proper functioning. The control is also calibrated at this point.

Copyright © 2000 IEEE. All rights reserved.
Copyright The Institute of Electrical and Electronics Engineers, Inc.
Provided by IHS under license with IEEE
No reproduction or networking permitted without license from IHS
Not for Resale

Annex A

(informative)

Unusual temperature and altitude conditions

A.1 Unusual temperatures and altitude service conditions

Regulators may be applied at higher ambient temperatures or at higher altitudes than specified in this standard, but performance may be affected and special consideration should be given to these applications.

A.2 Effect of altitude on temperature rise

The effect of the decreased air density due to high altitude is to increase the temperature rise of regulators since they are dependent upon air for the dissipation of heat losses.

A.3 Operation at rated kVA

Regulators may be operated at rated kVA at altitudes greater than 1000 m (3300 ft) without exceeding temperature limits, provided the average temperature of the cooling air does not exceed the values of Table A.1 for the respective altitudes.

NOTES

1—See 4.3.2 for regulator insulation capability at altitudes above 1000 m (3300 ft).

2—Operation in low ambient temperature with the top liquid at a temperature lower than –20 °C may reduce dielectric strength between internal energized components below design levels.

Table A.1—Maximum allowable average temperature of cooling air for carrying rated kVA[a]

Method of cooling apparatus	1000 m (3300 ft)	2000 m (6600 ft)	3000 m (9900 ft)	4000 m (13 200 ft)
	°C			
Liquid-immersed self-cooled	30	28	25	23
Liquid-immersed forced-air-cooled	30	26	23	20

[a]It is recommended that the average temperature of the cooling air be calculated by averaging 24 consecutive hourly readings. When the outdoor air is the cooling medium, the average of the maximum and minimum daily temperatures may be used. The value obtained in this manner is usually slightly higher, by not more than 0.3 °C, than the true daily average.

A.4 Operation at less than rated kVA

Regulators may be operated at altitudes greater than 1000 m (3300 ft) without exceeding temperature limits, provided the load to be carried is reduced below rating by the percentages given in Table A.2 for each 100 m (330 ft) that the altitude is above 1000 m (3300 ft).

Copyright © 2000 IEEE. All rights reserved.

Copyright The Institute of Electrical and Electronics Engineers, Inc.
Provided by IHS under license with IEEE
No reproduction or networking permitted without license from IHS
Not for Resale

TableA. 2—Rated kVA correction factors for altitudes greater than 1000 m (3300 ft)

Types of cooling	Derating factors (%)
Liquid-immersed air-cooled	0.4
Liquid-immersed water-cooled	0.0
Liquid-immersed forced-air-cooled	0.5

Copyright © 2000 IEEE. All rights reserved.
Copyright The Institute of Electrical and Electronics Engineers, Inc.
Provided by IHS under license with IEEE
No reproduction or networking permitted without license from IHS
Not for Resale

Annex B

(informative)

Bushing and field dielectric tests

B.1 Tests on bushings

When tests are required on bushings separately from the regulators, the tests shall be made in accordance with IEEE Std C57.19.00-1991.

B.2 Dielectric tests in the field

Field dielectric tests may be warranted on the basis of detection of combustible gas or other circumstances. However, periodic dielectric tests are not recommended because of the severe stress imposed on the insulation.

Where field dielectric tests are required, low-frequency applied voltage and induced voltage tests shall be used. The line-to-ground or line-to-line voltage stress imposed shall not exceed 150% of normal operating stress or 85% of full test voltage, whichever is lower. The duration of the tests shall be the same as that specified in 8.6.5 and 8.6.6 for applied and induced voltage tests, respectively.

Copyright © 2000 IEEE. All rights reserved.

Copyright The Institute of Electrical and Electronics Engineers, Inc.
Provided by IHS under license with IEEE
No reproduction or networking permitted without license from IHS
Not for Resale

Annex C

(informative)

Bibliography

When the following standards are superseded by an approved revision, the revision shall apply.

[B1] Accredited Standards Committee C2-1997, National Electrical Safety Code® (NESC®).

[B2] ASTM D117-1989, Standard Methods of Testing and Specifications for Electrical Insulating Oils of Petroleum Origin.

[B3] ASTM D3487-1988, Specifications for Mineral Insulating Oil Used in Electrical Apparatus.

[B4] IEEE Std 62-1995, IEEE Guide for Diagnostic Field Testing of Electric Power Apparatus—Part 1: Oil Filled Power Transformers, Regulators, and Reactors.

[B5] IEEE Std C57.104-1991, IEEE Guide for the Interpretation of Gases Generated in Oil-Immersed Transformers.

[B6] IEEE Std C57.131-1995, IEEE Standard Requirements for Load Tap Changers.

[B7] The IEEE Standard Dictionary of Electrical and Electronics Terms, Sixth Edition.

Copyright © 2000 IEEE. All rights reserved.
Copyright The Institute of Electrical and Electronics Engineers, Inc.
Provided by IHS under license with IEEE
No reproduction or networking permitted without license from IHS
Not for Resale