Recognized as an

American National Standard (ANSI)

IEEE Std C57.13-1993(R2003)

(Revision of IEEE Std C57.13-1978

IEEE Standard Requirements for Instrument Transformers

Sponsor
Transformers Committee
of the
IEEE Power Engineering Society

Approved June 17, 1993
Reaffirmed December 9, 2003
IEEE Standards Board

Approved April 26, 2004
American National Standards Institute

Abstract: Electrical, dimensional, and mechanical characteristics are covered, taking into consideration certain safety features, for current and inductively coupled voltage transformers of types generally used in the measuremtn of electricity and the control of equipment assoicated with the generation, transmission, and distribution of alternating current. The aim is to provide a basis for performance, interchangeability, and safety of equipment covered and to assist in the proper selection of such equipment. Accuracy classes for metering service are provided. The test code covers measurment and calculation of radio and phase angle, demagnetization, impedance and excitation measurements, polarity determination, resistance measurements, short-time characteristics, temperature rise tests, dielectric tests, and measurment of open-circuit voltage of current transformers.
Keywords: current transformer, intrument transformer, primary winding, rated secondary voltage, rated voltage, secondary winding

---

The Institute of Electrical and Electronics Engineers, Inc.
345 East 47th Street, New York, NY 10017-2394, USA

Copyright © 1994 by the Institute of Electrical and Electronics Engineers, Inc.
All rights reserved. Published 1994. Printed in the United States of America

Print: ISBN 0-7381-356-3

No part of this publication may be reproduced in any form, in an electronic retrieval system or otherwise, without the prior written permission of the publisher.

--`,,`,,`-`-`,,`,,`,`,,`---
Copyright The Institute of Electrical and Electronics Engineers, Inc.
Provided by IHS under license with IEEE
No reproduction or networking permitted without license from IHS
Not for Resale

IEEE Standards documents are developed within the Technical Committees of the IEEE Societies and the Standards Coordinating Committees of the IEEE Standards Board. Members of the committees serve voluntarily and without compensation. They are not necessarily members of the Institute. The standards developed within IEEE represent a consensus of the broad expertise on the subject within the Institute as well as those activities outside of IEEE that have expressed an interest in participating in the development of the standard.

Use of an IEEE Standard is wholly voluntary. The existence of an IEEE Standard does not imply that there are no other ways to produce, test, measure, purchase, market, or provide other goods and services related to the scope of the IEEE Standard. Furthermore, the viewpoint expressed at the time a standard is approved and issued is subject to change brought about through developments in the state of the art and comments received from users of the standard. Every IEEE Standard is subjected to review at least every five years for revision or reaffirmation. When a document is more than five years old and has not been reaffirmed, it is reasonable to conclude that its contents, although still of some value, do not wholly reflect the present state of the art. Users are cautioned to check to determine that they have the latest edition of any IEEE Standard.

Comments for revision of IEEE Standards are welcome from any interested party, regardless of membership affiliation with IEEE. Suggestions for changes in documents should be in the form of a proposed change of text, together with appropriate supporting comments.

Interpretations: Occasionally questions may arise regarding the meaning of portions of standards as they relate to specific applications. When the need for interpretations is brought to the attention of IEEE, the Institute will initiate action to prepare appropriate responses. Since IEEE Standards represent a consensus of all concerned interests, it is important to ensure that any interpretation has also received the concurrence of a balance of interests. For this reason IEEE and the members of its technical committees are not able to provide an instant response to interpretation requests except in those cases where the matter has previously received formal consideration.

Comments on standards and requests for interpretations should be addressed to:

Secretary, IEEE Standards Board
445 Hoes Lane
P.O. Box 1331
Piscataway, NJ 08855-1331
USA

IEEE standards documents may involve the use of patented technology. Their approval by the Institute of Electrical and Electronics Engineers, Inc. does not mean that using such technology for the purpose of conforming to such standards is authorized by the patent owner. It is the obligation of the user of such technology to obtain all necessary permissions.

Copyright The Institute of Electrical and Electronics Engineers, Inc.
Provided by IHS under license with IEEE
No reproduction or networking permitted without license from IHS
Not for Resale

Introduction

(This introduction is not a part of IEEE Std C57.13-1993, IEEE Standard Requirements for Instrument Transformers.)

This standard is the result of years of work revising C57.13-1978, American National Standard Requirements for Instrument Transformers. In this revision the “K” classification for relaying current transformers has been added. Changes also have been made in insulation levels and dielectric test requirements. The test code has been reworded to define accuracy, error, and uncertainity of measurements better.

At the time this standard was approved, the C57 Committee had the following membership:

P. J. Hopkinson, *Chair*
J. C. Thompson, *Vice Chair*
John A. Gauthier, *Secretary*

Electric Light and Power Group ..... P. E. Orehek
T. Diamantis
J. W. Howard
S. Paiva
J. Sullivan
M. Mingoia (*Alt.*)
J. Thompson (*Alt.*)
Institute of Electrical and Electronics Engineers ..... J. D. Borst
J. Davis
J. H. Harlow
L. Savio
R. A. Veitch
H. Smith (*Alt.*)
National Electrical Manufacturers Association ..... G. D. Coulter
S. Douglas
Susan Endersbe
A. Ghafourian
K. R. Linsley
R. Plaster
Harral Robin
P. Dewever (Alt.)
P. J. Hopkinson (Alt.)
J. J. Nay (Alt.)
Tennessee Valley Authority ..... F. Lewis
Underwriters Laboratories, Inc ..... W. T. O'Grady
US Department of Agriculture, REA ..... J. Bohlk
US Department of Energy, Western Area Power Administration ..... K. C. Wolohon
US Department of the Interior, Bureau of Reclamation ..... R. Chadwick
US Department of Navy, Civil Engineering Corps ..... H. P. Stickley

--`,,`,,`-`-`,,`,,`,`,,`---
Copyright The Institute of Electrical and Electronics Engineers, Inc.
Provided by IHS under license with IEEE
No reproduction or networking permitted without license from IHS
Not for Resale

At the time this standard was completed, the members of the Instrument Transformer Subcommittee were as follows:

John N. Davis, *Chair*
W. E. Morehart, *Secretary*

Ron Chatterti
Pierre Feghali
Douglas Getson
C. C. Honey
Anthony J. Jonnatti
Joseph K. Ma
T. Massouda
Ross McTaggart
Vadim Raff
John Ramboz
James E. Smith
Leonard Ray Smith
Eddy So
C. W. TenHaagen
R. C. Thomas

The following persons were on the balloting committee:

E. J. Adolphson
L. C. Aicher
D. J. Allan
B. Allen
R. Allustiarti
M. S. Altman
J. C. Arnold
J. Aubin
R. Bancroft
D. Barnard
D. L. Basel
P. L. Bellaschi
S. Bennon
W. B. Binder
J. V. Bonucchi
J. D. Borst
C. V. Brown
O. R. Compton
F. W. Cook
J. L. Corkran
D. W. Crofts
J. N. Davis
D. H. Douglas
R. F. Dudley
J. C. Dutton
J. K. Easley
J. A. Ebert
D. J. Fallon
S. L. Foster
M. Frydman
H. E. Gabel
R. E. Gearhart
D. W. Gerlach
D. A. Gillies
R. S. Girgis
R. L. Grubb
F. J. Gryszkiewicz
G. Hall
J. H. Harlow
F. W. Heinrichs
W. R. Henning
K. R. Highton
P. J. Hoefler
C. Hoesel
R. H. Hollister
C. C. Honey
E. Howels
C. Hurty
Y. P. Iijima
G. W. Iliff
R. G. Jacobsen
D. C. Johnson
D. L. Johnson
A. J. Jonnattii
C. P. Kappeler
R. B. Kaufman
J. J. Kelly
W. Kennedy
J. P. Kinney
B. Klaponski
A. D. Kline
E. Koenig
J. G. Lackey
R. E. Lee
H. F. Light
S. R. Lindgren
L. W. Long
L. A. Lowdermilk
R. I. Lowe
M. L. Manning
H. B. Margolis
T. Massouda
J. W. Matthews
J. McGill
C. J. McMillen
W. J. McNutt
S. P. Mehta
C. K. Miller
C. H. Millian
R. E. Minkwitz
M. Mitelman
H. R. Moore
W. E. Morehart
R. J. Musil
W. H. Mutschler
E. T. Norton
R. A. Olsson
B. K. Patel
W. F. Patterson
H. A. Pearce
D. Perco
L. W. Pierce
J. M. Pollitt
C. P. Raymond
C. A. Robbins
L. J. Savio
W. E. Saxon
D. N. Sharma
V. Shenoy
W. W. Stein
L. R. Stensland
D. Sundin
L. A. Swenson
D. S. Takach
V. Thenappan
R. C. Thomas
J. A. Thompson
T. P. Traub
D. E. Truax
W. B. Uhl
R. E. Uptegraff, Jr.
G. H. Vaillancourt
R. A. Veitch
L. B. Wagenaar
R. J. Whearty
A. L. Wilks
W. E. Wrenn
A. C. Wurdack
E. J. Yasuda

Copyright The Institute of Electrical and Electronics Engineers, Inc.
Provided by IHS under license with IEEE
No reproduction or networking permitted without license from IHS
Not for Resale

When the IEEE Standards Board approved this standard on June 17, 1993, it had the following membership:

Wallace S. Read, *Chair*
Donald C. Loughry, *Vice Chair*
Andrew G. Salem, *Secretary*

Gilles A. Baril	Jim Isaak	Don T. Michael*
José A. Berrios de la Paz	Ben C. Johnson	Marco W. Migliaro
Clyde R. Camp	Walter J. Karplus	L. John Rankine
Donald C. Fleckenstein	Lorraine C. Kevra	Arthur K. Reilly
Jay Forster*	E. G. "Al" Kiener	Ronald H. Reimer
David F. Franklin	Ivor N. Knight	Gary S. Robinson
Ramiro Garcia	Joseph L. Koepfinger*	Leonard L. Tripp
Donald N. Heirman	D. N. "Jim" Logothetis	Donald W. Zipse

*Member Emeritus

Also included are the following nonvoting IEEE Standards Board liaisons:

Satish K. Aggarwal	Richard B. Engelman	Stanley I. Warshaw
James Beall	David E. Soffrin	

Rachel A. Meisel
IEEE Standards Project Editor

--`,,`,,`-`-`,,`,,`,`,,`---

Copyright The Institute of Electrical and Electronics Engineers, Inc.
Provided by IHS under license with IEEE
No reproduction or networking permitted without license from IHS
Not for Resale

CLAUSE PAGE

1. Scope 1

2. References 1

3. Definitions 2

4. General requirements 5

4.1 Service conditions 5
4.2 Effect of air density on flashover voltage 6
4.3 Frequency 6
4.4 Effect of altitude on temperature rise and effect of ambient temperature on permissible loading 6
4.5 Basic impulse insulation levels, dielectric tests, and outdoor instrument transformer creepage distance and wet tests 8
4.6 Temperature rise 8
4.7 Tests 8
4.8 Construction 12

5. Accuracy classes for metering 14

5.1 Basis for accuracy classes 14
5.2 Expression of TCF at 0.6 power factor (lagging) of metered load 14
5.3 Standard accuracy classes 14
5.4 Limiting values of RCF and phase angle for standard accuracy classes 15

6. Current transformers 16

6.1 Terms in which ratings shall be expressed 16
6.2 Standard burdens 16
6.3 Accuracy ratings for metering 17
6.4 Accuracy ratings for relaying 19
6.5 Continuous thermal current rating factors based on 30 °C average ambient air temperature 20
6.6 Short-time current ratings 20
6.7 Secondary winding induced voltages 21
6.8 Nameplates 21
6.9 Terminals 21
6.10 Application data 21
6.11 Routine accuracy tests 24

7. Voltage transformers 24

7.1 Terms in which ratings shall be expressed 24
7.2 Standard burdens 30
7.3 Accuracy ratings 30
7.4 Thermal burden ratings 31
7.5 Nameplates 31
7.6 Terminals 31
7.7 Short-circuit capability 31
7.8 Application data 31
7.9 Induced voltage test 32
7.10 Routine accuracy tests 32

Copyright The Institute of Electrical and Electronics Engineers, Inc.
Provided by IHS under license with IEEE
No reproduction or networking permitted without license from IHS Not for Resale

CLAUSE PAGE

8. Test code 32

8.1 Ratio and phase angle measurement and calculations 33
8.2 Demagnetization 49
8.3 Impedance and excitation measurements 50
8.4 Polarity 54
8.5 Resistance measurements 57
8.6 Short-time characteristics 59
8.7 Temperature rise tests 62
8.8 Dielectric tests 66
8.9 Measurement of open-circuit voltage of current transformers 69

9. Bibliography 71

9.1 Additional sources 72

Copyright The Institute of Electrical and Electronics Engineers, Inc.
Provided by IHS under license with IEEE
No reproduction or networking permitted without license from IHS
Not for Resale

Copyright The Institute of Electrical and Electronics Engineers, Inc.
Provided by IHS under license with IEEE
No reproduction or networking permitted without license from IHS

Not for Resale

IEEE Standard Requirements for Instrument Transformers

1. Scope

This standard is intended for use as a basis for performance, interchangeability, and safety of equipment covered, and to assist in the proper selection of such equipment.

This standard covers certain electrical, dimensional, and mechanical characteristics, and takes into consideration certain safety features of current and inductively coupled voltage transformers of types generally used in the measurement of electricity and the control of equipment associated with the generation, transmission, and distribution of alternating current.

2. References

This standard shall be used in conjunction with the following publications. When the following publications are superseded by an approved revision, the revision shall apply.

ANSI C37.06-1987, Preferred Ratings and Related Required Capabilities for AC High-Voltage Circuit Breakers Rated on a Symmetrical Current Basis.[1]

IEEE Std C37.04-1979 (Reaff 1988), IEEE Standard Rating Structure for AC High-Voltage Circuit Breakers Rated on a Symmetrical Current Basis (ANSI).[2]

IEEE Std C37.09-1979 (Reaff 1988), IEEE Standard Test Procedure for AC High-Voltage Circuit Breakers Rated on a Symmetrical Current Basis (ANSI).

IEEE Std C57.12.00-1993, IEEE General Requirements for Liquid-Immersed Distribution, Power, and Regulating Transformers.

[1]ANSI publications are available from the Sales Department, American National Standards Institute, 11 West 42nd Street, 13th Floor, New York, NY 10036, USA.
[2]IEEE publications are available from the Institute of Electrical and Electronics Engineers, 445 Hoes Lane, P.O. Box 1331, Piscataway, NJ 08855-1331, USA.

Copyright The Institute of Electrical and Electronics Engineers, Inc.
Provided by IHS under license with IEEE
No reproduction or networking permitted without license from IHS
Not for Resale

IEEE Std C57.12.90-1993, IEEE Standard Test Code for Liquid-Immersed Distribution, Power, and Regulating Transformers and IEEE Guide for Short-Circuit Testing of Distribution and Power Transformers.

IEEE Std 4-1978, IEEE Standard Techniques for High Voltage Testing (ANSI).

IEEE Std 21-1976, General Requirements and Test Procedures for Outdoor Apparatus Bushings.

IEEE Std 100-1992, The New IEEE Standard Dictionary of Electrical and Electronics Terms (ANSI).

NEMA SG 4-1975 (R 1980), Alternating-Current High-Voltage Circuit Breakers.[3]

3. Definitions

All definitions, except as specifically covered in this standard, shall be in accordance with IEEE Std 100-1992. [4]

3.1 bar-type current transformer: One that has a fixed and straight single primary winding turn passing through the magnetic circuit. The primary winding and secondary winding(s) are insulated from each other and from the core(s) and are assembled as an integral structure.

3.2 basic lightning impulse insulation level (BIL): A specific insulation level expressed in kilovolts of the crest value of a standard lightning impulse.

3.3 burden of an instrument transformer: That property of the circuit connected to the secondary winding that determines the active and reactive power at the secondary terminals.

NOTE — The burden is expressed either as total ohms impedance with the effective resistance and reactance components, or as the total voltamperes and power factor at the specified value of current or voltage, and frequency.

3.4 bushing-type current transformer: One that has an annular core and a secondary winding insulated from and permanently assembled on the core but has no primary winding and no insulation for a primary winding. This type of current transformer is for use with a fully insulated conductor as the primary winding. A bushing-type current transformer usually is used in equipment where the primary conductor is a component pan of other apparatus.

3.5 cascade-type voltage transformer: A voltage transformer that has an insulated-neutral or grounded-neutral terminal and that has the primary winding subdivided into two or more (usually equal) series connected sections, mounted on one or more magnetic cores, and that has the secondary winding located about the core at the neutral end of the primary winding. The sections of the primary winding are coupled by “coupling windings.” The cores, if more than one, are insulated from each other and connected to definite voltage levels along the primary winding.

3.6 continuous thermal current rating factor (RF): The number by which the rated primary current of a current transformer is multiplied to obtain the maximum primary current that can be carried continuously without exceeding the limiting temperature rise from 30 °C average ambient air temperature. The RF of tapped-secondary or multi-ratio transformers applies to the highest ratio, unless otherwise stated. (When current transformers are incorporated internally as parts of larger transformers or power circuit breakers, they shall meet allowable average winding and hot spot temperature limits under the specific conditions and requirements of the larger apparatus.)

3.7 current transformer (CT): An instrument transformer intended to have its primary winding connected in series with the conductor carrying the current to be measured or controlled.

3.8 double-secondary current transformer: One that has two secondary windings each on a separate magnetic circuit with both magnetic circuits excited by the same primary winding.

3.9 double-secondary voltage transformer: One that has two secondary windings on the same magnetic circuit with the secondary winding insulated from each other.

[3]NEMA publications are available from the National Electrical Manufacturers Association, 2101 L Street NW, Washington, DC 20037, USA.
[4]Information on references can be found in clause 2.

Copyright © 1994 IEEE All Rights Reserved

Copyright The Institute of Electrical and Electronics Engineers, Inc.
Provided by IHS under license with IEEE
No reproduction or networking permitted without license from IHS Not for Resale

3.10 excitation losses for an instrument transformer: The power (usually expressed in watts) required to excite the transformer at its primary terminals.

NOTE — Excitation losses include core, dielectric, and winding losses due to the excitation current.

3.11 fused-type voltage transformer: One that is provided with means for mounting one or more fuses as integral parts of the transformer in series with the primary winding.

3.12 grounded-neutral terminal type voltage transformer: One that has the neutral end of the primary winding connected to the case or mounting base in a manner not intended to facilitate disconnection.

3.13 indoor current (or voltage) transformer: One that, because of its construction, must be protected from the weather.

3.14 instrument transformer: One that is intended to reproduce in its secondary circuit, in a definite and known proportion, the current or voltage of its primary circuit with the phase relations substantially preserved.

3.15 insulated-neutral terminal type voltage transformer: One that has the neutral end of the primary winding insulated from the case or base and connected to a terminal that provides insulation for a lower voltage than required for the line terminal. (The neutral may be connected to the case or mounting base in a manner intended to facilitate temporary disconnection for dielectric testing.)

3.16 leakage flux: Any magnetic flux, produced by current in an instrument transformer winding, which does not link all turns of all windings.

3.17 low remanence current transformer: One with a remanence not exceeding 10% of maximum flux.

3.18 marked ratio: The ratio of the rated primary value to the rated secondary value as stated on the nameplate.

3.19 multiple-secondary current transformer: One that has three or more secondary windings, each on a separate magnetic circuit, with all magnetic circuits excited by the same primary winding.

3.20 multi-ratio current transformer: One with three or more ratios obtained by the use of taps on the secondary winding.

3.21 nominal ratio: *See:* **marked ratio**

3.22 outdoor current (or voltage) transformer: One of weather-resistant construction, suitable for service without additional protection from the weather.

3.23 percent ratio correction: The difference between the ratio curretion factor and unity, expressed in percent $[(RCF - 1) \times 100]$ *See*: **ratio correction factor**

3.24 phase angle of an instrument transformer (PA): The phase displacement, in minutes or radians, between the primary and secondary values. The phase angle of a current transformer is designated by the Greek letter beta (β) and is positive when the current leaving the identified secondary terminal leads the current entering the identified primary terminal. The phase angle of a voltage transformer is designated by the Greek letter gamma (γ) and is positive when the secondary voltage from the identified to the unidentified terminal leads the corresponding primary voltage.

3.25 phase angle correction factor (PACF): The ratio of the true power factor to the measured power factor. It is a function of both the phase angles of the instrument transformers and the power factor of the primary circuit being measured.

NOTE — The phase angle correction factor corrects for the phase displacement of the secondary current or voltage, or both, due to the instrument transformer phase angle(s).

For a current transformer, the phase angle correction factor:

$$PACF = \cos(\theta_2 + \beta)/\cos(\theta_2)$$

For a voltage transformer, the phase angle correction factor:

$$PACF = \cos(\theta_2 - \beta)/\cos(\theta_2)$$

When both voltage and current transformers are used, the combined phase angle correction:

$$PACF = \cos(\theta_2 + \beta - \gamma)/\cos(\theta_2)$$

Copyright © 1994 IEEE All Rights Reserved

Copyright The Institute of Electrical and Electronics Engineers, Inc.
Provided by IHS under license with IEEE
No reproduction or networking permitted without license from IHS Not for Resale

θ_2 is the apparent power factor angle of the circuit being measured.

3.26 polarity: The relative instantaneous directions of the currents entering the primary terminals and leaving the secondary terminals during most of each half cycle.

NOTE — Primary and secondary terminals are said to have the same polarity when, at a given instant during most of each half cycle, current enters the primary terminal and leaves the secondary terminal in the same direction as though there was a continuous circuit between the two terminals.

3.27 primary winding: The winding intended for connection to the circuit to be measured or controlled.

3.28 rated current: The primary current upon which the performance specifications are based.

3.29 rated secondary current: The rated current divided by the marked ratio.

3.30 rated secondary voltage: The rated voltage divided by the marked ratio.

3.31 rated voltage: The primary voltage upon which the performance specifications of a voltage transformer are based.

3.32 ratio correction factor (RCF): The ratio of the true ratio to the marked ratio. The primary current or voltage is equal to the secondary current or voltage multiplied by the marked ratio times the ratio correction factor.

3.33 secondary winding: The winding intended for connection to the measuring, protection, or control devices.

3.34 series-parallel primary current transformer: One that has two insulated primary windings that are intended for connection in series or parallel to provide different rated currents.

3.35 tapped-secondary current or voltage transformer: One with two ratios obtained by use of a tap on the secondary winding.

3.36 thermal burden rating of a voltage transformer: The voltampere output that the voltage transformer will provide continuously at rated secondary voltage without exceeding the specified temperature limits.

3.37 three-wire type current transformer: One that has two insulated primary windings and one secondary winding and is for use on a three-wire, single-phase service.

NOTE — The primary windings and the secondary winding are permanently assembled on the core as an integral structure. The secondary current is proportional to the phasor sum of the primary currents.

3.38 transformer correction factor (TCF): The ratio of the true watts or watthours to the measured secondary watts or watthours, divided by the marked ratio.

NOTE — The transformer correction factor for a current or voltage transformer is the ratio correction factor multiplied by the phase angle correction factor for a specified primary circuit power factor.

The true primary watts or watthours are equal to the watts or watthours measured, multiplied by the transformer correction factor and the marked ratio.

The true primary watts or watthours, when measured using both current and voltage transformers, are equal to the current transformer ratio correction factor multiplied by the voltage transformer ratio correction factor multiplied by the marked ratios of the current and voltage transformers multiplied by the observed watts or watthours. It is usually sufficiently accurate to calculate true watts or watthours as equal to the product of the two transformer correction factors multiplied by the marked ratios multiplied by the observed watts or watthours.

3.39 true ratio: The ratio of the root-mean-square (rms) primary voltage or current to the rms secondary voltage or current under specified conditions.

3.40 turns ratio of a current transformer: The ratio of the secondary winding turns to the primary winding turns.

3.41 turns ratio of a voltage transformer: The ratio of the primary winding turns to the secondary winding turns.

3.42 voltage transformer (VT): An instrument transformer intended to have its primary winding connected in shunt with the voltage to be measured or controlled.

Copyright © 1994 IEEE All Rights Reserved

Copyright The Institute of Electrical and Electronics Engineers, Inc.
Provided by IHS under license with IEEE
No reproduction or networking permitted without license from IHS Not for Resale

3.43 window-type current transformer: One that has a secondary winding insulated from and permanently assembled on the core, but has no primary winding as an integral part of the structure. Primary insulation is provided in the window, through which one turn of the line conductor can be passed to provide the primary winding.

3.44 wound-type current transformer: One that has a primary winding consisting of one or more turns mechanically encircling the core or cores. The primary winding(s) and secondary winding(s) are insulated from each other and from the core(s) and are assembled as an integral structure.

4. General requirements

4.1 Service conditions

4.1.1 Usual temperature and altitude service conditions

Instrument transformers conforming to this standard shall be suitable for operation at their thermal ratings, provided that the altitude does not exceed 1000 m (3300 ft).

4.1.1.1 30 °C average ambient temperature

If the transformers are air cooled, the ambient temperature of the cooling air does not exceed 40 °C and the average ambient temperature of the cooling air for any 24-hour period does not exceed 30 °C.[5]

4.1.1.2 55 °C average ambient temperature

Instrument transformers may also be given ratings for operation in 55 °C average ambient temperature, with maximum ambient air temperature not exceeding 65 °C.

4.1.2 Unusual temperature and altitude service conditions

Instrument transformers may be applied at higher altitudes or higher ambient temperatures than specified in 4.1.1, but the performance may be affected and special consideration should be given to these application (see 4.4).

4.1.3 Other conditions that may affect design and application

Where unusual conditions other than those discussed in 4.1.1 or 4.1.2 exist, they should be brought to the attention of those responsible for the design and application of instrument transformers. Examples of these conditions are:

a) Damaging fumes or vapors, excessive or abrasive dust, explosive mixtures of dust or gases, steam, salt spray, excessive moisture or dripping water, etc.
b) Abnormal vibrations, shocks, or tilting
c) Ambient temperatures above 55 °C or below –30 °C
d) Unusual transportation or storage conditions
e) Unusual space limitations or restricted ventilation
f) Unusual duty, frequency of operation, difficulty of maintenance, poor wave form, unbalanced voltage, special insulation requirements, etc.
g) Applications in switchgear assemblies including metal enclosed bus
h) Applications with high-voltage power circuit breakers
i) Applications with power transformers
j) Applications with outdoor bushings

[5]It is recommended that the average temperature of the cooling air be calculated by averaging 24 consecutive hourly readings. When the outdoor air is the cooling medium, the average of the maximum and minimum daily temperature may be used. The value that is obtained in this manner is usually higher than the true daily average by not more than $^1/_2$ °C.

Copyright © 1994 IEEE All Rights Reserved

Copyright The Institute of Electrical and Electronics Engineers, Inc.
Provided by IHS under license with IEEE
No reproduction or networking permitted without license from IHS Not for Resale

4.2 Effect of air density on flashover voltage

The effect of decreased air density is to decrease the flashover voltage for a given flashover distance. See IEEE Std 4-1978 , for use of a correction factor with sphere gaps.

The dielectric strength of air decreases as altitude increases. Dielectric strength that depends on air.should be multiplied by the proper altitude correction factor to obtain the dielectric strength at the required altitude (see table 1).

Table 1— Dielectric strength correction factors for altitudes greater than 1000 m (3300 ft)

≥ 1000 m	≥ 3300 ft	Altitude correction factor for dielectric strength
1000	3300	1.00
1200	4000	0.98
1500	5000	0.95
1800	6000	0.92
2100	7000	0.89
2400	8000	0.86
2700	9000	0.83
3000	10 000	0.80
3600	12 000	0.75
4200	14 000	0.70
4500	15 000	0.67
NOTE — Altitude of 4500 m is considered a maximum for instrument transformers conforming to this standard.		

4.3 Frequency

Instrument transformers shall be designed and rated for operation at a frequency of 60 Hz.

4.4 Effect of altitude on temperature rise and effect of ambient temperature on permissible loading

4.4.1 Loading of current transformers at less than rated current at high altitudes

Current transformers may be operated at altitudes greater than 1000 m without exceeding established temperature limits provided the current is reduced below rated (or below rated times continuous thermal current rating factor) by 0.3% for each 100 m that the altitude exceeds 1000 m.

4.4.2 Operation of current transformers at other than 30 °C ambient temperature

Current transformers designed for 55 °C temperature rise above 30 °C average ambient air temperature may be loaded in accordance with the curves shown in figure 1 for any given average cooling air temperature and continuous thermal current rating factor. The percent of rated primary current that can be carried continuously without causing established temperature limits to be exceeded is given by the curves. For example, a transformer with a continuous thermal current

Copyright © 1994 IEEE All Rights Reserved

Copyright The Institute of Electrical and Electronics Engineers, Inc.
Provided by IHS under license with IEEE
No reproduction or networking permitted without license from IHS Not for Resale

rating factor (RF) of 2.0 at 30 °C ambient temperature can be used at approximately 150% of rated current at an ambient temperature of 55 °C.

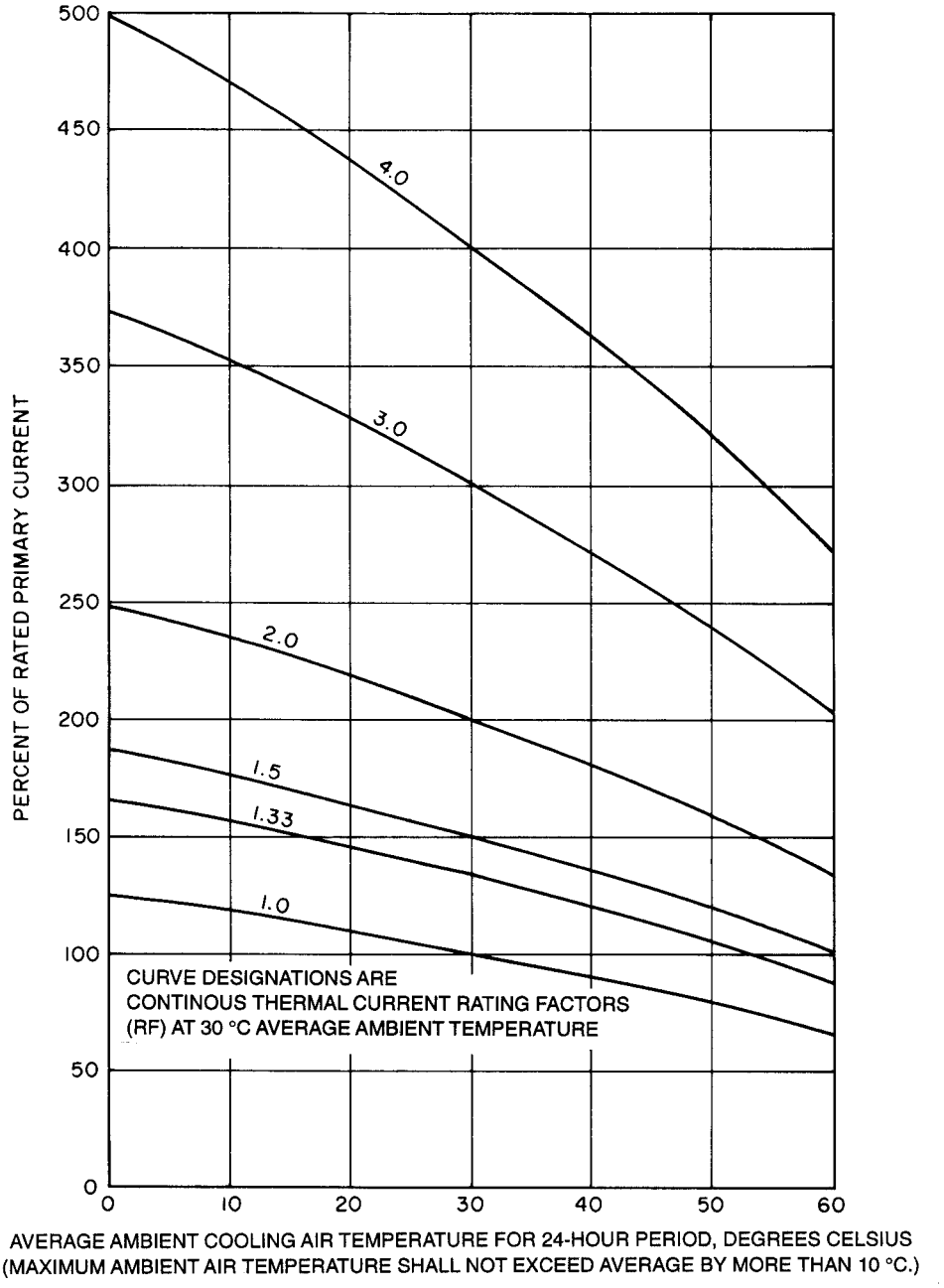

Figure 1— 55 °C rise current transformer basic loading characteristics (In air)

NOTE — These curves are based on the assumption that average winding temperature rise is proportional to current squared.

Copyright © 1994 IEEE All Rights Reserved

Copyright The Institute of Electrical and Electronics Engineers, Inc.
Provided by IHS under license with IEEE
No reproduction or networking permitted without license from IHS
Not for Resale

4.4.3 Loading of voltage transformers at higher altitudes or higher ambient temperatures

Voltage transformers can be safely operated at higher altitudes or higher ambient temperatures only after consultation with the manufacturer, because a large percentage of the temperature rise may be due to iron loss, which varies widely with design.

4.5 Basic impulse insulation levels, dielectric tests, and outdoor instrument transformer creepage distance and wet tests

An instrument transformer shall be assigned a basic impulse insulation level (BIL) to indicate the factory dielectric tests that the transformer is capable of withstanding.

With the following exceptions, basic impulse insulation voltages, applied voltage test voltages for primary winding insulation, and creepage distances and wet tests for outdoor instrument transformers are listed in table 2 and table 3:

a) Applied voltage tests for primary winding insulation are not required on grounded-neutral terminal type voltage transformers.
b) For insulated-neutral terminal type voltage transformers, the applied voltage test for primary winding insulation shall be 19 kV on outdoor types with BILs greater than 110 kV. On indoor types, and on outdoor types with BILs of 110 kV or less, the test shall be 10 kV.
c) There is no BIL requirement on the neutral terminal of grounded-neutral or insulated-neutral terminal type voltage transformers.
d) The applied voltage test for secondary winding insulation and between multiple secondary windings shall be 2.5 kV.
e) The applied voltage test for autotransformers for use in the secondary circuits of instrument transformers shall be 2.5 kV.
f) The applied voltage test for the primary insulation of auxiliary instrument transformers (for use in the secondary circuits of instrument transformers) shall be 2.5 kV.
g) The applied voltage test between primary windings of three-wire type current transformers with l0 kV BIL shall be 4 kV.

4.6 Temperature rise

The limits of observable temperature rise in instrument transformers when tested in accordance with their ratings shall be as given in table 4, and the transformers shall be designed so that the hottest-spot winding temperature rise above ambient will not exceed the values given in table 4.

4.7 Tests

4.7.1 Instrument transformer tests

These are the routine, type, and other tests that are necessary to assure that the design and construction of the transformer are adequate to meet the specified requirements. The method of making tests shall be as described in clause 8., except as otherwise required in table 3, or by equivalent alternate methods.

4.7.2 Routine tests

Each instrument transformer shall receive the following routine tests at the factory. These tests shall be made on the instrument transformer after complete assembly, where feasible.

Copyright © 1994 IEEE All Rights Reserved

Copyright The Institute of Electrical and Electronics Engineers, Inc.
Provided by IHS under license with IEEE
No reproduction or networking permitted without license from IHS Not for Resale

a) Applied voltage dielectric tests between windings and between windings and ground (with the exception there is no primary insulation test for bushing type, split-core, or any current transformer designed with incomplete insulation for the primary conductor)
b) Induced voltage tests
c) Accuracy tests
d) Polarity test

4.7.3 Type tests (design tests)

Type tests shall be performed on at least one transformer of each design group that may have a different characteristic in the specific test. Transformers subjected to type tests shall withstand the applicable routine tests before and after the type tests. It is not necessary to conduct more than one type test on the same unit.

Type tests for voltage transformers shall include:

a) Impulse (BIL) test
b) Wet 60 Hz 10 s withstand test
c) Short-time mechanical withstand test
d) Temperature rise test to verify the rating factor
e) Accuracy test to verify quoted accuracy ratings

Type tests for current transformers shall include:

a) Impulse (BIL) test
b) Wet 60 Hz 10 s withstand test
c) Short-time mechanical current rating test
d) Temperature rise test to verify the thermal burden rating
e) Accuracy test to verify quoted accuracy ratings
f) Switching impulse test, if applicable (see table 3)

4.7.4 Other tests

Other tests are additional tests made for application information, for provision of specific data requested by users, for verification of type capability, etc. Examples of other tests are:

a) Special accuracy tests
b) Open-circuit secondary voltage magnitude or withstand capability on current transformers
c) Voltage transformer capabilities in respect to 125%, 140%, and 173% overvoltage characteristics required
d) Radio influence voltage test (RIV)
e) Partial discharge test

Copyright © 1994 IEEE All Rights Reserved

--`,,`,,`-`-`,,`,,`,`,,`---

Copyright The Institute of Electrical and Electronics Engineers, Inc.
Provided by IHS under license with IEEE
No reproduction or networking permitted without license from IHS Not for Resale

Table 2— Basic impulse insulation levels and dielectric tests

Maximum system voltage (kV)	Nominal system voltage (kV)	BIL and full-wave crest (kV)*	Chopped wave minimum time to crest flashover (kV) & (us)		Power frequency applied voltage test (kV rms)	Wet 60 Hz 10 s withstand (kV rms)†	Minimum creepage distance (mm) & (in)	
0.66	0.60	10	12	—	4	—	—	—
1.20	1.20	30	36	1.50	10	6‡	—	—
2.75	2.40	45	54	1.50	15	13§	—	—
5.60	5.00	60	69	1.50	19	20§	—	—
9.52	8.70	75	88	1.60	26	24§	—	—
15.50	15.00	95	110	1.80	34	30§	—	—
15.50	15.00	110	130	2.00	34	34	279	11
25.50	25.00	125	145	2.25	40	36§	381	15
25.50	25.00	150	175	3.00	50	50	432	17
36.50	34.50	200	230	3.00	70	70	660	26
48.30	46.00	250	290	3.00	95	95	890	35
72.50	69.00	350	400	3.00	140	140	1220	48
121.00	115.00	450	520	3.00	185	185	1680	66
121.00	115.00	550	630	3.00	230	230	2010	79
145.00	138.00	650	750	3.00	275	275	2340	92
169.00	161.00	750	865	3.00	325	315	2900	114
242.00	230.00	900	1035	3.00	395	350	3560	140
242.00	230.00	1050	1210	3.00	460	445	4320	170
362.00	345.00	1300	1500	3.00	575		5210	205
550.00	500.00	1675	1925	3.00	750		8080	318
550.00	500.00	1800	2070	3.00	800		8080	318
800.00	765.00	2050	2360	3.00	920		11 200	442

*The selection of the lower BIL for a given nominal system voltage, or for a marked ratio in tables 10–14, also reduces other requirements as tabulated above. The acceptability of these reduced requirements should be evaluated for the specific instrument transformer design and application.

†For test procedures, see IEEE Std 21-1976.

‡These values are requirements for distribution transformer bushings that are in IEEE Std C57.12.00-1993.

See table 3 for current transformers with the same dielectric test requirements as power circuit breakers. See clause 8. for test methods.

Copyright © 1994 IEEE All Rights Reserved

Copyright The Institute of Electrical and Electronics Engineers, Inc.
Provided by IHS under license with IEEE
No reproduction or networking permitted without license from IHS Not for Resale

Table 3—
Basic impulse insulation levels and dielectric tests for current transformers with the same dielectric test requirements as outdoor power circuit breakers*

Low frequency (kV, rms)			Impulse test 1.2 × 50 μs wave (kV, crest)†					Minimum creep distance	
Rated max	*1 min dry*	*10 s wet*	*Full wave withstand*	*Interrupter full wave*	*2 ms withstand*	*3 ms withstand*	*Switching impulse insulation level*	*(mm) & (in)*	
121	260	230	550B‡	412	710	632	Not req'd	1780	70
145	310	275	650B	488	838	748	Not req'd	2130	84
169	365	315	750B	552	968	862	Not req'd	2490	93
242	425	350	900B	675	1160	1040	Not req'd	3560	140
362	555	Not req'd	1300B	975	1680	1500	825	5310	209
550	860	Not req'd	1800B	1350	2320	2070	1175	8080	318
800	960	Not req'd	2050B	1540	2640	2360	1425	11 200	442

*See IEEE Std C37.09-1979 for impulse and applied potential test procedures.
†No flashovers are permitted on current transformers.
‡The letter "B" values are established by ANSI C37.06-1987 for current transformers that have the same requirements as power circuit breakers.

Table 4—
Limits of temperature rise*

	30 °C ambient		55 °C ambient	
Type of instrument transformer	*Avg. winding temp. rise determined by resistance method (°C)*	*Hottest-spot winding temp. rise (°C)†*	*Avg. winding temp. rise determined by resistance method(°C)*	*Hottest-spot winding temp. rise (°C)*
55 °C rise	55‡	65	30	40
65 °C rise	65‡	80	40	55
80 °C rise dry-type	80	110	55	85

*Temperature rise of current transformers that are a part of high-voltage power circuit breakers or power transformers shall be in accord with IEEE Std C37.04-1979 or IEEE Std C57.12.00-1993, respectively.
†Temperature rise of other metallic parts shall not exceed these values.
‡Temperature rise at the top of the oil in sealed transformers shall not exceed these values.

Copyright © 1994 IEEE All Rights Reserved

Copyright The Institute of Electrical and Electronics Engineers, Inc.
Provided by IHS under license with IEEE
No reproduction or networking permitted without license from IHS Not for Resale

4.8 Construction

4.8.1 Polarity and terminal marking

The relative instantaneous polarity of terminals or leads shall be clearly indicated by permanent markings that cannot easily be obliterated.

When the polarity is indicated by letters, the letter H shall be used to distinguish the leads or terminals connected to the primary winding and the letter X (also Y and Z, etc., if multiple secondary windings are provided) shall be used to distinguish the leads or terminals connected to the secondary winding. In addition, each lead shall be numbered, for example, H_1, H_2, X_1, X_2. If more than three secondary windings are provided they shall be identified as X, Y, Z, and W for four secondary windings; X, Y, Z, W, and V for five secondary windings; X, Y, Z, U, W, and V for six secondary windings, etc. H_1 and X_1 (also Y_1 and Z_1, etc., if provided) shall be of the same polarity.

When multiple primary windings are provided, the leads or terminals shall be designated by the letter H together with consecutive pairs of numbers (H_1, H_2, H_3, H_4, etc.). The odd-numbered leads or terminals shall be of the same polarity.

When taps or leads are provided on the secondary winding(s), the leads or terminals shall be lettered as required above and numbered X_1, X_2, X_3, etc., or Y_1, Y_2, Y_3, etc., with the lowest and highest numbers indicating the full winding and the intermediate numbers indicating the taps in their relative order. When X_1 is not in use, the lower number of the two leads in use all be the polarity lead.

4.8.2 Symbols

Instrument transformer symbols are given in table 5.

Table 5— Instrument transformer symbols

Symbol	Voltage transformers	Current transformers
: (colon)	Ratio expression, only to show ratio between primary and secondary amperes voltages or between primary and tertiary voltages *Example:* Voltage transformers with one primary winding and one secondary winding 14 400:120 V Ratio 120:1	Ratio between primary and secondary amperes *Example:* Current transformer with one primary winding and one secondary winding Current ratio 100:5A
× (multiplication sign)	Voltage ratings or ratios of transformer with a primary or secondary winding having two or more coils for series or parallel connection *Example:* Voltage transformer with primary winding in two coils for series or parallel connection for two ratings 2400 × 4800 V Ratio 20 × 40:1	Current ratings of transformer with a primary or secondary winding having two or more coils for series or parallel connection *Example:* Current transformer with two primary windings in two coils for series orparallel connection for two ratios Current ratio 100 × 200:5A
// (double slant line)	(Not used)	Ampere rating of separate secondary windings each having an independent core *Example:* Current transformer with two separate secondary windings and two cores Current ratio 100:5//5A

Copyright © 1994 IEEE All Rights Reserved

Copyright The Institute of Electrical and Electronics Engineers, Inc.
Provided by IHS under license with IEEE
No reproduction or networking permitted without license from IHS Not for Resale

Table 5— Instrument transformer symbols (Continued)

Symbol	Voltage transformers	Current transformers
& (ampersand)	Voltage ratings or ratios of separate secondary windings on one core *Example:* Voltage transformer for connection line-to-ground, with one primary winding and two secondary windings 14 400:120 & 72 V Ratio 120 & 200:1	Ampere ratings of separate primary windings on one core (When all primary current ratings are the same, the transformer shall produce rated secondary current when each primary winding carries rated current and the primary currents are in phase.When all primary currents are not the same, the transformer shall produce rated secondary current when the only primary current is rated current in only one primary winding.) a) Transformer with two or more primary windings designed to be used individually *Example:* Current transformer with two primary windings Current ratio 100 & 600:5 A b) Totalizing transformer with two or more primary windings that can be used simultaneously and connected in different circuits *Example:* Totalizing current transformer with three primary windings Current ratio 5 & 5 & 5:5 A c) Transformer for three-wire single-phase circuit with two separate primary windings *Example:* Current transformer for three-wire single-phase circuit Current ratio 100 & 100:5 A
/ (single slant line)	Two or more primary or secondary voltage ratings obtained by taps in the secondary winding. *Example:* Voltage transformer with taps in the secondary winding for additional primary voltage ratings 8400/12 000/14 400 V Ratio 70/100/120:1 *Example:* Voltage transformer with a tap in the secondary winding for additional secondary voltage ratings 14 000 V Ratio 120/200:1	Different primary current ratings obtained by taps in the secondary taps in the secondary winding. *Example:* Current transformer with taps in the secondary winding for additional ratios Current ratio 300/400/600:5A
E (E/E_1 Y) (E_1GrdY/E)	Designation of primary voltage ratings *Example:* Voltage transformer with E-rated voltage for connection on an E voltage system 14 000 (E) *Example:* Voltage transformer with E-rated voltage that is suitable for connection on an E voltage system or for Y connection on an E_1 voltage system 2400/4160Y (E/E_1Y) *Example:* Voltage transformer with E-rated voltage with reduced insulation at neutral end, for line-to-ground connection on an E_1 voltage system 12 470GrdY/7200 (E_1GrdY/E)	(Not used directly)

Copyright © 1994 IEEE All Rights Reserved

Copyright The Institute of Electrical and Electronics Engineers, Inc.
Provided by IHS under license with IEEE
No reproduction or networking permitted without license from IHS Not for Resale

5. Accuracy classes for metering

5.1 Basis for accuracy classes

Accuracy classes for revenue metering are based on the requirement that the transformer correction factor (TCF) of the voltage transformer or of the current transformer shall be within specified limits when the power factor (lagging), of the metered load has any value from 0.6 to 1.0, under specified conditions as follows:

a) For current transformers, at the specified standard burden (see 6.2 for standard burdens) at 10% and at 100% of rated primary current (also at the current corresponding to the rating factor (RF) if it is greater than 1.0). The accuracy class at a lower standard burden is not necessarily the same as at the specified standard burden.
b) For voltage transformers, for any burden in voltamperes from zero to the specified standard burden, at the specified standard burden power factor (see 7.2 for standard burdens) and at any voltage from 90% to 110% of the rated voltage. The accuracy class at a lower standard burden of different power factor is not necessarily the same as at the specified standard burden.

5.2 Expression of TCF at 0.6 power factor (lagging) of metered load

It can be shown[6] that a TCF at 0.6 power factor (lagging) of the metered load is:

a) For voltage transformers TCF = RCF + $\gamma/2600$
b) For current transformers, TCF = RCF – $\beta/2600$

where

RCF = ratio correction factor
γ, β = phase angle in minutes, for voltage transformers and current transformers respectively

5.3 Standard accuracy classes

The limits of transformer correction factor in standard accuracy classes shall be as shown in table 6.

Table 6— Standard accuracy class for metering service and corresponding limits of transformer correction factor [0.6 to 1.0 power factor (lagging) of metered load]

Metering accuracy class	Voltage transformers (at 90% to 100% rated voltage)		Current transformers			
	Minimum	*Maximum*	*At 100% rated current**		*At 10% rate current*	
			Minimum	*Maximum*	*Minimum*	*Maximum*
0.3	0.997	1.003	0.997	1.003	0.994	1.006
0.6	0.994	1.006	0.994	1.006	0.988	1.012
1.2	0.988	1.012	0.988	1.012	0.976	1.024

*For current transformers the 100% rated current limit also applies to the current corresponding to the continuous thermal current rating factor.

[6]This is true for errors within the range of the standard metering accuracy classes.

Copyright © 1994 IEEE All Rights Reserved

Copyright The Institute of Electrical and Electronics Engineers, Inc.
Provided by IHS under license with IEEE
No reproduction or networking permitted without license from IHS Not for Resale

5.4 Limiting values of RCF and phase angle for standard accuracy classes

The limiting values of RCF are the same as those for TCF (see 5.2). For any known value of RCF for a given transformer the limiting values[7] of the angles derived from the expression in 5.2 are given by:

a) For voltage transformers, $\gamma = 2600$ (TCF - RCF)
b) For current transformers, $\beta = 2600$ (RCF - TCF)

in which TCF is taken as the maximum and minimum values, given in table 6, for the specified accuracy class.

These relations are shown graphically in figure 2 for current and in figure 3 for voltage transformers.

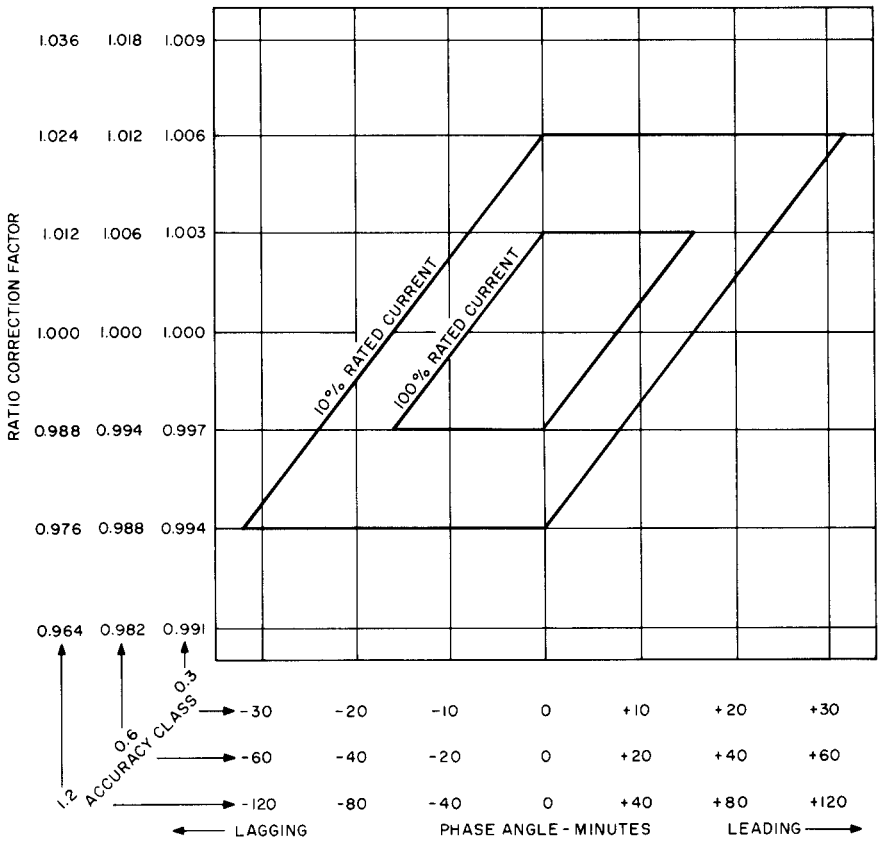

Figure 2— Limits of accuracy classes for current transformers for metering

NOTE — The accuracy requirements for 100% rated current also apply at the continuous thermal current rating of the transformer.

[7]This is true of errors within the range of the standard metering accuracy classes.

Copyright © 1994 IEEE All Rights Reserved

Copyright The Institute of Electrical and Electronics Engineers, Inc.
Provided by IHS under license with IEEE
No reproduction or networking permitted without license from IHS
Not for Resale

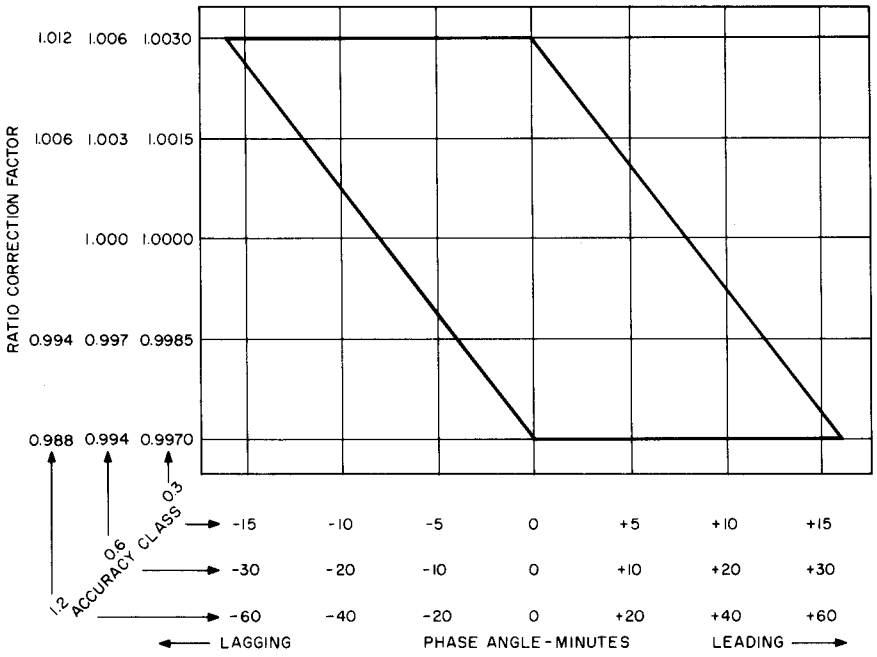

Figure 3— Limits of accuracy classes for voltage transformers for metering

NOTE — The transformer characteristics shall lie within the limits of the parallelogram for all voltages between 90% to 110% of rated voltage.

6. Current transformers

6.1 Terms in which ratings shall be expressed

The ratings of a current transformer shall include:

a) Basic impulse insulation level in terms of full-wave test voltage (see tables 2 and 3)
b) Nominal system voltage, or maximum system voltage (see tables 2 and 3)
c) Frequency (in Hertz)
d) Rated primary and secondary currents (see tables 7 and 8)
e) Accuracy classes at standard burdens (see 6.3, 6.4, and tables 6 and 9)
f) Continuous thermal current rating factor based on 30 °C average ambient air temperature (see 6.5)
g) Short-time mechanical current rating and short-time thermal current rating (see 6.6)

6.2 Standard burdens

Standard burdens for current transformers with 5 A rated secondary current shall have resistance and inductance according to table 9.

Copyright © 1994 IEEE All Rights Reserved

Copyright The Institute of Electrical and Electronics Engineers, Inc.
Provided by IHS under license with IEEE
No reproduction or networking permitted without license from IHS Not for Resale

6.3 Accuracy ratings for metering

A current transformer for metering shall be given an accuracy rating for each standard burden for which it is rated. For example, the accuracy ratings assigned to a current transformer might be 0.3 B-0.1 and B-0.2, 0.6 B-0.5.

Table 7— Ratings for the current transformers with one or two ratios

		Current ratings (A)	
Single ratio		*Double ratio with series-parallel primary windings*	*Double ratio with taps in secondary winding*
10:5	800:5	25 × 50:5	25/50:5
15:5	1200:5	50 × 100:5	50/100:5
25:5	1500:5	100 × 200:5	100/200:5
40:5	2000:5	200 × 400:5	200/400:5
50:5	3000:5	400 × 800:5	300/600:5
75:5	4000:5	600 × 1200:5	400/800:5
100:5	5000:5	1000 × 2000:5	600/1200:5
200:5	6000:5	2000 × 4000:5	1000/2000:5
200:5	8000:5		1500/3000:5
400:5	12 000:5		2000/4000:5
600:5			

Table 8— Current transformer ratings, multi-ratio type

Current ratings (A)		Secondary taps	Current ratings (A)		Secondary taps
	600:5			3000:5	
50:5		X2 – X3	300:5		X3 – X4
100:5		X1 – X2	500:5		X4 – X5
150:5		X1 – X3	800:5		X3 – X5
200:5		X4 – X5	1000:5		X1 – X2
250:5		X3 – X4	1200:5		X2 – X3
300:5		X2 – X4	1500:5		X2 – X4
400:5		X1 – X4	2000:5		X2 – X5
450:5		X3 – X5	2200:5		X1 – X3
500:5		X2 – X5	2500:5		X1 – X4
600:5		X1 – X5	3000:5		X1 – X5
	1200:5			4000:5	
100:5		X2 – X3	500:5		X1 – X2
200:5		X1 – X2	1000:5		X3 – X4
300:5		X1 – X3	1500:5		X2 – X3
400:5		X4 – X5	2000:5		X1 – X3

Copyright © 1994 IEEE All Rights Reserved

Copyright The Institute of Electrical and Electronics Engineers, Inc.
Provided by IHS under license with IEEE
No reproduction or networking permitted without license from IHS
Not for Resale

Table 8— Current transformer ratings, multi-ratio type (Continued)

Current ratings (A)		Secondary taps	Current ratings (A)		Secondary taps
500:5		X3 – X4	2500:5		X2 – X4
600:5		X2 – X4	3000:5		X1 – X4
800:5		X1 – X4	3500:5		X2 – X5
900:5		X3 – X5	4000:5		X1 – X5
1000:5		X2 – X5			
1200:5		X1 – X5			
	2000:5			5000:5	
300:5		X3 – X4	500:5		X2 – X3
400:5		X1 – X2	1000:5		X4 – X5
500:5		X4 – X5	1500:5		X1 – X2
800:5		X2 – X3	2000:5		X3 – X4
1100:5		X2 – X4	2500:5		X2 – X4
1200:5		X1 – X3	3000:5		X3 – X5
1500:5		X1 – X4	3500:5		X2 – X5
1600:5		X2 – X5	4000:5		X1 – X4
2000:5		X1 – X5	5000:5		X1 – X5

Table 9—
Standard burdens for current transformers with 5 A secondary windings*

Burdens	Burden designation†	Resistance (Ω)	Inductance (mH)	Impedance (Ω)	Voltamperes (at 5 A)	Power factor
Metering burdens	B-0.1	0.09	0.116	0.1	2.5	0.9
	B-0.2	0.18	0.232	0.2	5.0	0.9
	B-0.5	0.45	0.580	0.5	12.5	0.9
	B-0.9	0.81	1.040	0.9	22.5	0.9
	B-1.8	1.62	2.080	1.8	45.0	0.9
Relaying burdens	B-1	0.50	2.300	1.0	25.0	0.5
	B-2	1.00	4.600	2.0	50.0	0.5
	B-4	2.00	9.200	4.0	100.0	0.5
	B-8	4.00	18.400	8.0	200.0	0.5

*If a current transformer secondary winding is rated at other than 5 A, ohmic burdens for specification and rating shall be derived by multiplying the resistance and inductance of the table $[5/(\text{ampere rating})]^2$, the VA at rated current, the power factor, and the burden designation remaining the same.

†These standard burden designations have no significance at frequencies other than 60 Hz.

Copyright © 1994 IEEE All Rights Reserved

--`,,`,,`-`-`,,`,,`,`,,`---

Copyright The Institute of Electrical and Electronics Engineers, Inc.
Provided by IHS under license with IEEE
No reproduction or networking permitted without license from IHS Not for Resale

6.3.1 Tapped-secondary or multiple-ratio current transformer accuracy rating

The metering accuracy rating applies to the full secondary winding, unless otherwise specified.

6.4 Accuracy ratings for relaying

A current transformer for relaying shall be given an accuracy rating according to 6.4.1.

6.4.1 Basis for relaying accuracy ratings

For relaying accuracy ratings, the ratio correction shall not exceed 10%. Relaying accuracy ratings shall be designated by a classification and a secondary terminal voltage rating as follows:

a) *C, K, or T, classification*. C or K classification covers current transformers in which the leakage flux in the core of the transformer does not have an appreciable effect on the ratio or ratios within the limits of current and burden outlined in this subclause, so that the ratio can be calculated in accordance with 8.1.10. Current transformers with K classification shall have a knee-point voltage (see 6.10.2) at least 70% of the secondary terminal voltage rating.
T classification covers current transformers in which the leakage flux in the core of the transformer has an appreciable effect on the ratio within the limits specified in item b.
An appreciable effect is defined as a 1% difference between the values of actual ratio correction and the ratio correction calculated in accordance with 8.1.10.

b) *Secondary terminal voltage rating*. This is the voltage the transformer will deliver to a standard burden at 20 times rated secondary current without exceeding 10% ratio correction. Furthermore, the ratio correction shall be limited to 10% at any current from 1 to 20 times rated secondary current at the standard burden or any lower standard burden used for secondary terminal voltage ratings. For example, on a current transformer with 5 A rated secondary current, relay accuracy rating C100 means that the ratio can be calculated and that the ratio correction will not exceed 10% at any current from 1 to 20 times rated secondary current with a standard 1.0 ohm burden (1.0 $\Omega \times 5$ A $\times 20 \times$ rated secondary current = 100 V).

Secondary terminal voltage ratings are based on a rated secondary current of 5 A (100 A at 20 times rated) and standard burdens. The voltage ratings and their associated burdens are as follows:

Secondary terminal voltage	**Standard burden (see table 9)**
10	B-0.1
20	B-0.2
50	B-0.5
100	B-1
200	B-2
400	B-4
800	B-8

If a current transformer secondary winding is rated at other than 5 A, appropriate voltage rating values shall be derived by multiplying the standard voltage rating values by 5/(amperes rating). For such transformers, the burden will be derived as in table 11 and the secondary terminal voltage rating will be the resulting value at 20 times rated secondary

Copyright © 1994 IEEE All Rights Reserved

--`,,`,,`-`-`,,`,,`,`,,`---
Copyright The Institute of Electrical and Electronics Engineers, Inc.
Provided by IHS under license with IEEE
No reproduction or networking permitted without license from IHS Not for Resale

current. For example, if the rated secondary current is 1 A, the burden corresponding to B-2.0 will be 2.0×25, or 50 Ω (at 0.5 power factor); and the corresponding secondary terminal voltage rating will be $50 \times 20 \times 1 = 1000$ V. In this example, the relay accuracy rating would be C1000, K1000, or T1000 as applicable.

6.4.2 Tapped-secondary or multi-ratio current transformer

The relay accuracy class applies only to the full winding, unless otherwise specified. If transformers have C or K classification on the full winding, all tapped sections shall be arranged so that the ratio can be calculated in accordance with 8.1.10 [see 6.4.1 item a)].

6.5 Continuous thermal current rating factors based on 30 °C average ambient air temperature

The thermal current rating factors shall be 1.0, 1.33, 1.5, 2.0, 3.0, or 4.0.

6.6 Short-time current ratings

The short-time thermal current and short-time mechanical capabilities are not independent.

6.6.1 Short-time mechanical current rating

The short-time mechanical current rating shall be the rms value of the ac component of a displaced (asymmetrical) primary current wave that the transformer is capable of withstanding with the secondary winding short-circuited. “Capable of withstanding” shall be interpreted to mean that if subjected to this duty, the current transformer shall show no damage and shall be capable of meeting the other applicable requirements of this standard.

6.6.2 Short-time thermal current rating

The 1 s thermal current rating of a current transformer is the rms symmetrical primary current that can be carried for 1 s with the secondary winding short-circuited without exceeding in any winding the limiting temperature. The temperature of a conductor in the windings of a current transformer shall be determined from calculation using methods specified in 8.6.2.

The limiting temperature shall be 250 °C for copper conductor, or 200 °C for EC aluminum conductor. A maximum temperature of 250 °C shall be allowed for aluminum alloys that have resistance to annealing properties at 250 °C equivalent to EC aluminum at 200 °C, or for applications of EC aluminum where the characteristics of the fully annealed material satisfy the mechanical requirements.

If the 1 s rating is not dependent on core saturation (see 8.6.3), the short-time thermal current rating for any time up to 5 s may be determined from the 1 s rating by dividing the current for I s by the square root of the specified number of seconds. For example, the 3 s thermal current rating is equal to the I s current rating divided by the square root of 3, or 58% of the one second rating. This calculation includes the assumption that the primary current is symmetrical during the time interval.

6.6.3 Short-time and continuous current ratings of window-type or bushing-type current transformers

Such current transformers, in which the primary conductor is not an integral part of the current transformers, shall be rated in terms of primary current, even though the short-time mechanical and thermal limitations and the continuous thermal limitations arc those of the secondary winding only. Such ratings specified for current transformers of this construction should not be considered to be applicable to the conductor used for the primary winding of these transformers, as such conductor may be a component of other apparatus or bus work having different limitations.

Copyright © 1994 IEEE All Rights Reserved

Copyright The Institute of Electrical and Electronics Engineers, Inc.
Provided by IHS under license with IEEE
No reproduction or networking permitted without license from IHS Not for Resale

6.7 Secondary winding induced voltages

6.7.1 Operation with secondary circuit open

Current transformers should never be operated with the secondary circuit open because hazardous crest voltages may result. Transformers conforming to this standard shall be capable of operating under emergency conditions for 1 minute with rated primary current times the rating factor with the secondary circuit open if the open-circuit voltage does not exceed 3500 V crest.

6.7.2 Induced voltage test

(Not required for window-type or bar-type 10 kV BIL current transformers rated 600 A and below and having no relay accuracy rating.)

The one minute test voltage applied to the secondary terminals with the primary winding open shall be twice the relay rated voltage given in 6.4.1, item b), but not under 200 V.

Transformers with no relay voltage classification shall be tested at 200 V. If a frequency higher than 60 Hz is necessary to avoid excessive exciting current, see 8.8.4 for reduced time of application. If the voltage cannot be induced sinusoidally even at 400 Hz without core saturation, no test is required.

6.8 Nameplates

Nameplates shall include, as a minimum, the following:

a) Manufacturer's name or trademark
b) Manufacturer's type
c) Manufacturer's serial number (SER)
d) Rated primary and secondary current
e) Nominal system voltage (NSV) or maximum system voltage (MSV) (None for bushing CTs)
f) Basic impulse insulation level (BIL kV) (None for bushing CTs)
g) Rated frequency (Hz)
h) Continuous thermal current rating factor (RF)
i) Accuracy rating
    1) Metering accuracy class at a specified standard burdens: as a minimum, the burdens at which the transformer is rated 0.3 accuracy class
    2) Relaying accuracy rating on transformers intended primarily for relaying applications

NOTE — See IEEE Std C37.04-1979 and NEMA SG 4.1975 for nameplate requirements in high-voltage circuit breakers.

6.9 Terminals

Primary terminals of wound-type and bar-type current transformers shall be suitable for use with either aluminum or copper conductors. Secondary terminals and voltage terminals, where provided, shall be suitable for use with copper conductors.

6.10 Application data

The following characteristic data suitable for portraying or calculating performance shall be made available.

Copyright © 1994 IEEE All Rights Reserved

Copyright The Institute of Electrical and Electronics Engineers, Inc.
Provided by IHS under license with IEEE
No reproduction or networking permitted without license from IHS Not for Resale

6.10.1 Data for metering applications

These data shall consist of the following:

a) Typical ratio correction factor and phase angle curves, for the standard burdens for which metering accuracy ratings are assigned, plotted over the range of current from 0.1 times rated current to the maximum continuous thermal current rating. These curves shall be plotted on rectangular coordinate paper and need not be drawn where the errors exceed the limits of the 1.2 accuracy class.
b) Short-time mechanical and short-time thermal current ratings, as defined in 6.6.1 and 6.6.2 respectively.

6.10.2 Data for relaying applications

These data shall consist of the following:

a) Relaying accuracy rating, as defined in 6.4
b) Short-time mechanical and short-time thermal current ratings, as defined in 6.6.1 and 6.6.2, respectively.
c) Resistance of the secondary winding between the secondary terminals at a specified temperature given in such a way that the value for each published ratio may be determined.
d) For C or K class transformers, typical excitation curves on log-log coordinate paper, with square decades, plotted between excitation current and induced secondary voltage for each published ratio, extending from 1% of the relay accuracy rating secondary terminal voltage to a voltage that will cause an excitation current of five times rated secondary current.

   Curves shall also show the knee of the curve. For current transformers with nongapped cores, the knee is defined as the point where the tangent is at 45 degrees to the abscissa. For current transformers with gapped cores, the knee is defined as the point where the tangent is at 30 degrees to the abscissa. For current transformers conforming to this standard, it shall be possible to draw the above tangents to the excitation curves. The maximum tolerance of excitation values above and below the knee shall be as shown (see figure 4), for both gapped and nongapped cores.

   NOTE — The 45 degree and the 30 degree tangents were established from experience using conventional magnetic materials. The significance of these tangent points will be dependent on the magnetic material in use.
e) For T class transformers, typical overcurrent ratio curves on rectangular coordinate paper plotted between primary and secondary current over the range from 1 to 22 times rated primary current for all the standard burdens[8] up to the standard burden which causes a ratio correction of 50% (see figure 5).

[8]Except B = 0.9 and 1.8

Copyright © 1994 IEEE All Rights Reserved

--`,`-`-`,,`,,`,`,,`---

Copyright The Institute of Electrical and Electronics Engineers, Inc.
Provided by IHS under license with IEEE
No reproduction or networking permitted without license from IHS Not for Resale

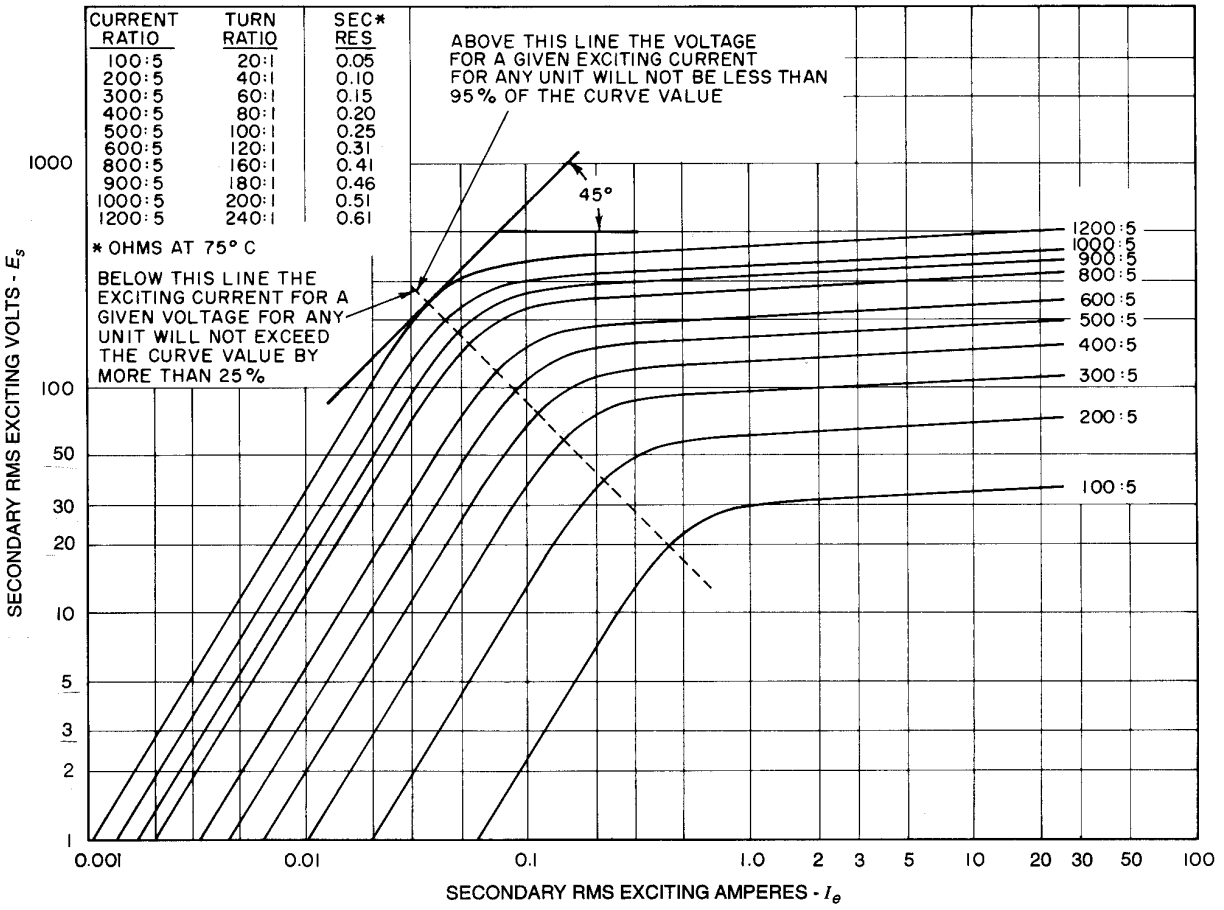

Figure 4— Typical excitation curves for multi-ratio C or K class current transformers with nongapped cores

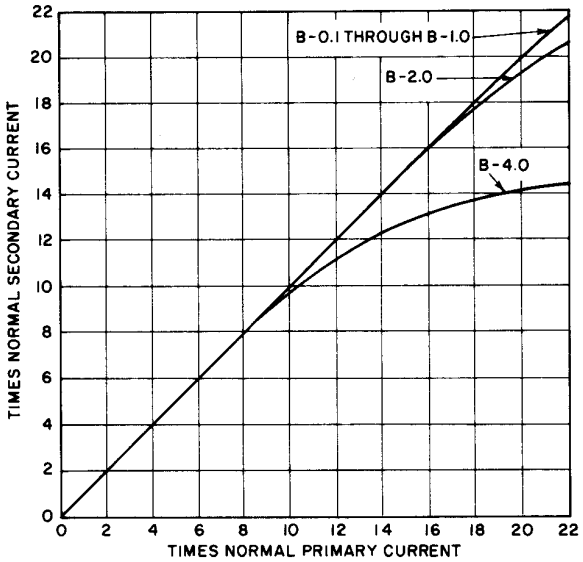

Figure 5— Typical overcurrent ratio curve

Copyright © 1994 IEEE All Rights Reserved

Copyright The Institute of Electrical and Electronics Engineers, Inc.
Provided by IHS under license with IEEE
No reproduction or networking permitted without license from IHS
Not for Resale

6.11 Routine accuracy tests

Tests for current transformers with metering accuracy ratings shall be made on each transformer, and shall consist of measurement of ratio and phase angle at 100% and at 10% of rated current, when energized at rated frequency. The burden shall be the maximum standard burden for which the transformer is rated at its best accuracy class.

Routine accuracy tests for current transformers with only a relaying accuracy rating shall be made on each transformer and shall consist of a turns ratio check and a measurement of exciting current at the voltage at which the typical excitation curve (see figure 4) has a 45 degree tangent (for nongapped cores) or a 30 degree tangent (for gapped cores). The exciting current shall not exceed 125% of the typical curve value.

7. Voltage transformers

7.1 Terms in which ratings shall be expressed

The ratings of a voltage transformer shall include:

a) Basic impulse insulation level in terms of full-wave test voltage (see tables 10–14 and figures 6a–6h)
b) Rated primary voltage and ratio (see tables 10–14 and figures 6a–6h)
c) Frequency (in Hertz)
d) Accuracy ratings (see 5.3)
e) Thermal burden rating (see 7.4)

NOTE — In tables 10 through 13 voltage transformers connected line-to-ground on an ungrounded system cannot be considered grounding transformers and shall not be operated with the secondary windings in closed delta because excessive currents may flow in the delta.

Copyright © 1994 IEEE All Rights Reserved

Copyright The Institute of Electrical and Electronics Engineers, Inc.
Provided by IHS under license with IEEE
No reproduction or networking permitted without license from IHS Not for Resale

Table 10—
Ratings and characteristics of group 1* voltage transformers

Rated voltage (V)	Marked ratio	Basic impulse insulation level (kV crest)
120 / 208Y	1:1	10
240 / 416Y	2:1	10
300 / 520Y	2.5:1	10
120 / 208Y	1:1	30
240 / 416Y	2:1	30
300 / 520Y	2.5:1	30
480 / 832Y	4:1	30
600 / 1040Y	5:1	30
2400 / 4160Y	20:1	60
4200 / 7270Y	35:1	75
4800 / 8320Y	40:1	75
7200 / 12 470Y	60:1	110 or 95
8400 for 14 400Y	70:1	110 or 95
12 000 / 20 750Y	100:1	150 or 125
14 400 / 24 940Y	120:1	150 or 125

*Group 1 voltage transformers are for application with 100% of rated primary voltage across the primary winding when connected line-to-line or line-to-ground. (For typical connections, see figures 6a and 6b.) Group 1 voltage transformers shall be capable of operations at 125% of rated voltage on an emergency basis (this capability does not preclude the possibility of ferroresonance), provided the burden, in voltamperes at rated voltage, docs not exceed 64% of the thermal burden rating, without exceeding the following average winding temperatures: 105 °C for 55 °C rise types, 115 °C for 65 °C rise types, and 130 °C for 80 °C rise types. This will result in reduction of life expectancy.

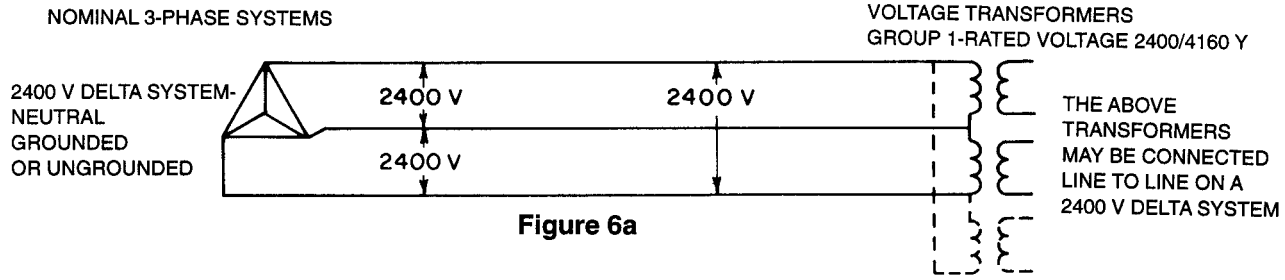

Figure 6a

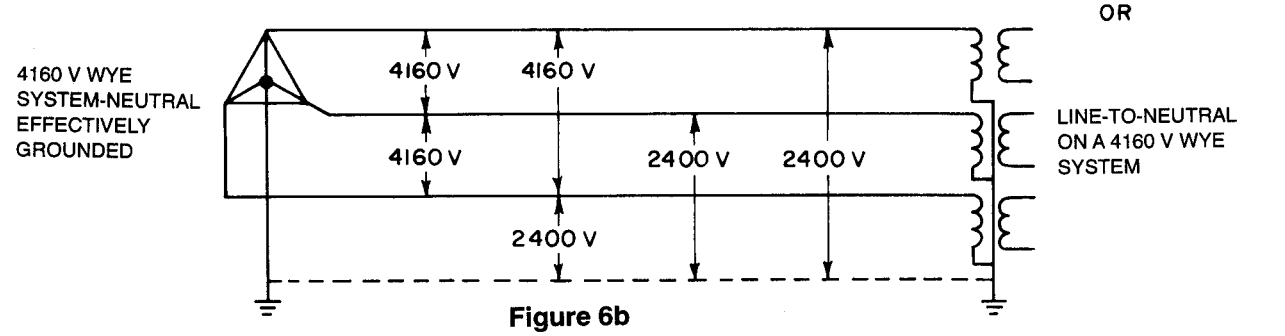

Figure 6b

Figures 6a and 6b —Typical primary connections

Copyright © 1994 IEEE All Rights Reserved

Copyright The Institute of Electrical and Electronics Engineers, Inc.
Provided by IHS under license with IEEE
No reproduction or networking permitted without license from IHS
Not for Resale

Table 11—
Ratings and characteristics of group 2* voltage transformers

Rated voltage (V)	Marked ratio	Basic impulse insulation level (kV crest)
120	1:1	10
240	2:1	10
300	2.5:1	10
480	4:1	10
600	5:1	10
2400	20:1	45
4800	40:1	60
7200	60:1	75
12 000	100:1	110 or 95
14 000	1201	110 or 95
24 000	200:1	150 or 125
34 500	300:1	200 or 150
46 000	400:1	250
69 000	600:1	350

*Group 2 voltage transformers are primarily for line-to-line services, and may be applied line-to-ground or line-to-neutral at a winding voltage equal to the primary voltage rating divided by the square root of 3. (For typical connections see figures 6c and 6d.) Note that the thermal burden capability will be reduced at this voltage.

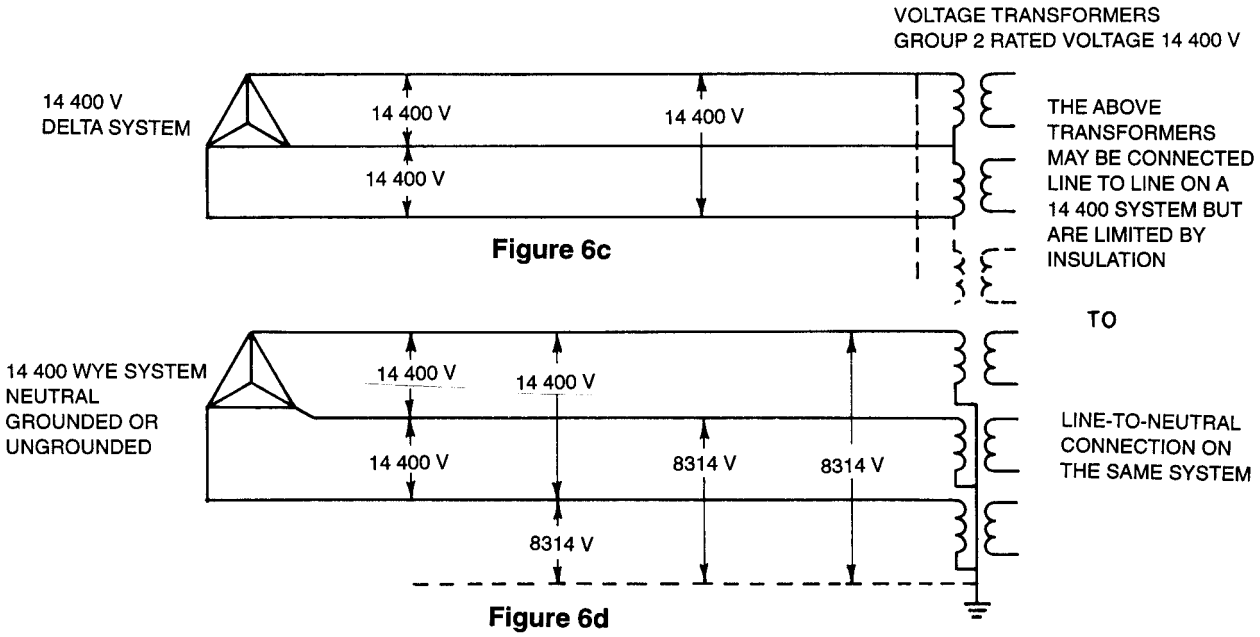

Figures 6c and 6d —Typical primary connections

Copyright © 1994 IEEE All Rights Reserved

Copyright The Institute of Electrical and Electronics Engineers, Inc.
Provided by IHS under license with IEEE
No reproduction or networking permitted without license from IHS
Not for Resale

Table 12—
Ratings and characteristics of group 3* outdoor voltage transformers

Rated voltage (V)	Marked ratio	Basic impulse insulation level (kv crest)
24 940 Grd Y/14 400	120/200 & 120/200:1	150 or 125
34 500 Grd Y/20 125	175/300 & 175/300:1	200
46 000 Grd Y/27 600	240/400 & 240/400:1	250
69 000 Grd Y/40 250	350/600 & 350/600:1	350
115 000 Grd Y/69 000	600/1000 & 600/1000:1	550 or 450
138 000 Grd Y/80 500	700/1200 & 700/1200:1	650 or 550
161 000 Grd Y/92 000	800/1400 & 800/1400:1	750 or 650
230 000 Grd Y/138 000	1200/2000 & 1200/2000:1	1050 or 900
345 000 Grd Y/207 000	1800/3000 & 1800/3000:1	1300 or 1175
500 000 Grd Y/287 500	2500/4500 & 2500/4500:1	1800 & 1675
750 000 Grd Y/431 250	3750/6250 & 3750/6250:1	2050
NOTE — The double voltage ratio is usually achieved by a tap in the secondary winding. In such cases the nonpolarity terminal of the winding shall be the common terminal.		

*Group 3 voltage transformers are for line-to-ground connection only and have two secondary windings. They may be insulated-neutral or grounded,neutral terminal type. Ratings through 161 000 Grd Y/92 000 shall be capable of the square root of 3 times rated voltage (this capability does not preclude the possibility of ferroresonance) for 1 min without exceeding 175 °C temperature rise for copper conductor or 125 °C rise for EC aluminum. Ratings 230 000 Grd Y/138 000 and above shall be capable of operation at 140% of rated voltage with the same limitation of time and temperature. (For typical connections, see figure .) Group 3 transformers shall be capable of continuous operation at 110% of rated voltages, prodded the burden in voltamperes at this voltage does not exceed the thermal burden rating.

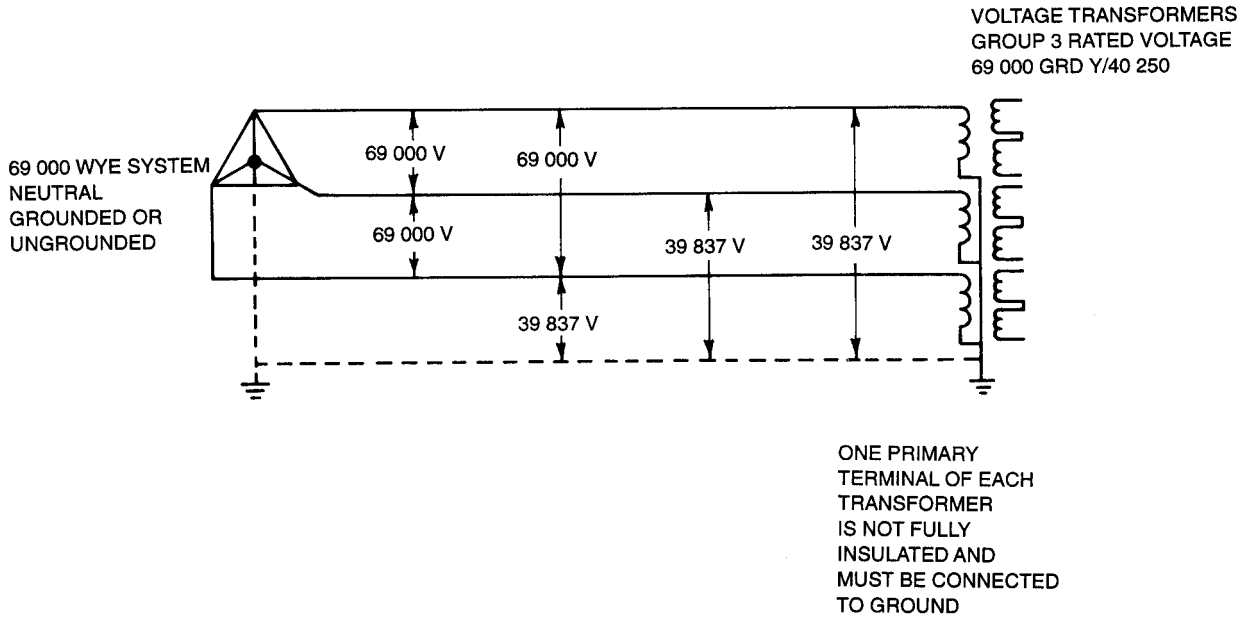

Figure 6e —Typical primary connections

Copyright © 1994 IEEE All Rights Reserved

Copyright The Institute of Electrical and Electronics Engineers, Inc.
Provided by IHS under license with IEEE
No reproduction or networking permitted without license from IHS
Not for Resale

Table 13—
Ratings and characteristics of group 4* indoor voltage transformers

Group	Rated voltage (V)	Marked ratio	Basic impulse insulation level (kV crest)
Group 4A: For operations at approximately 100% of rated voltage (see figure 6b)	4160 Grd Y/2400	20:1	60
	7200 Grd Y//4200	35:1	75
	8320 Grd Y/4800	40:1	75
	12 470 Grd Y/7200	60:1	110 or 95
	14 400 Grd Y/8400	70:1	110 or 95
Group 4B: For operation at approximately 587percnt; of rated voltage (see figure 6d)	4160 Grd Y/2400	35:1	60
	4800 Grd Y/4800	40:1	60
	7200 Grd Y/7200	60:1	75
	12 000 Grd Y/12 000	100:l	110 or 95
	14 400 Grd Y/14 400	120:1	1l0 or 95

*Group 4 voltage transformers are for line-to-ground connection only. They may be insulated-neutral or grounded-neutral terminal type. (For typical connections of Group 4A, see figure 6f. For typical connections of Group 4B, see figure 6g.) Group 4 transformers shall be capable of continuous operation at 110% of rated voltages, provided the burden in voltamperes at this voltage does not exceed the thermal burden rating. Group 4A voltage transformers shall be capable of operation at 1257percnt; of rated voltage on an emergency basis (this capability does not preclude the possibility of ferroresonance), provided the burden, in voltamperes at rated voltage, does not exceed 64% of the thermal burden rating, without exceeding the following average winding temperatures: 105 °C for 55 °C rise types, 115 °C for 65 °C rise types and 130 °C for 80 °C rise types. (This will result in a reduction of normal life expectancy.)

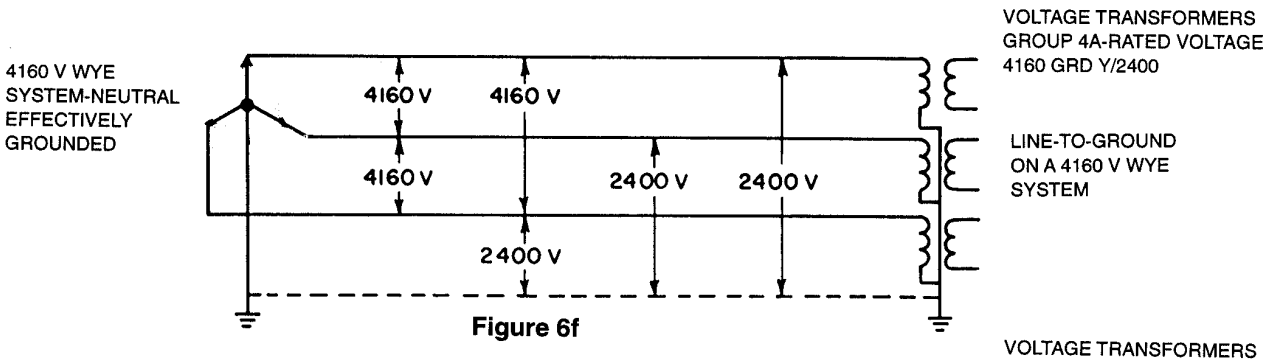

Figure 6f

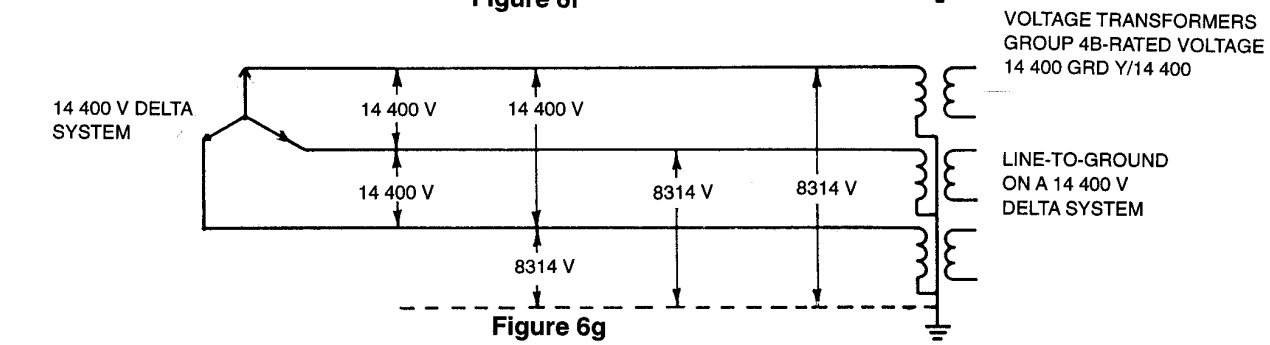

Figure 6g

Figures 6f and 6g —Typical primary connections

Copyright © 1994 IEEE All Rights Reserved

Copyright The Institute of Electrical and Electronics Engineers, Inc.
Provided by IHS under license with IEEE
No reproduction or networking permitted without license from IHS
Not for Resale

Table 14—
Ratings and characteristics of group 5* indoor voltage transformers

Rated voltage (V)	Marked ratio	Basic impulse insulation level (kV crest)
12 470 Grd Y/7200	60:1	110
14 000 Grd Y/8400	70:1	110
20 780 Grd Y/12 000	100:1	150 or 125
24 940 Grd Y/14 400	120:1	150 or 125
34 500 Grd Y/20 125	175:1	200 or 150

*Group 5 voltage transformers are for line-to-ground connection only, and are for use outdoors on grounded systems. They may be insulated-neutral or grounded-neutral terminal type. They shall be capable of operation at 140% of rated voltage for 1 min without exceeding 175 °C temperature rise for copper conductor or 125 °C rise for EC aluminum conductor. (This will result in a reduction of normal life expectancy.) Group 5 voltage transformers shall be capable of continuous operation at 110% of rated voltage, provided the burden, in voltamperes at this voltage, does not exceed the thermal burden rating. This capability does not preclude the possibility of ferroresonance.

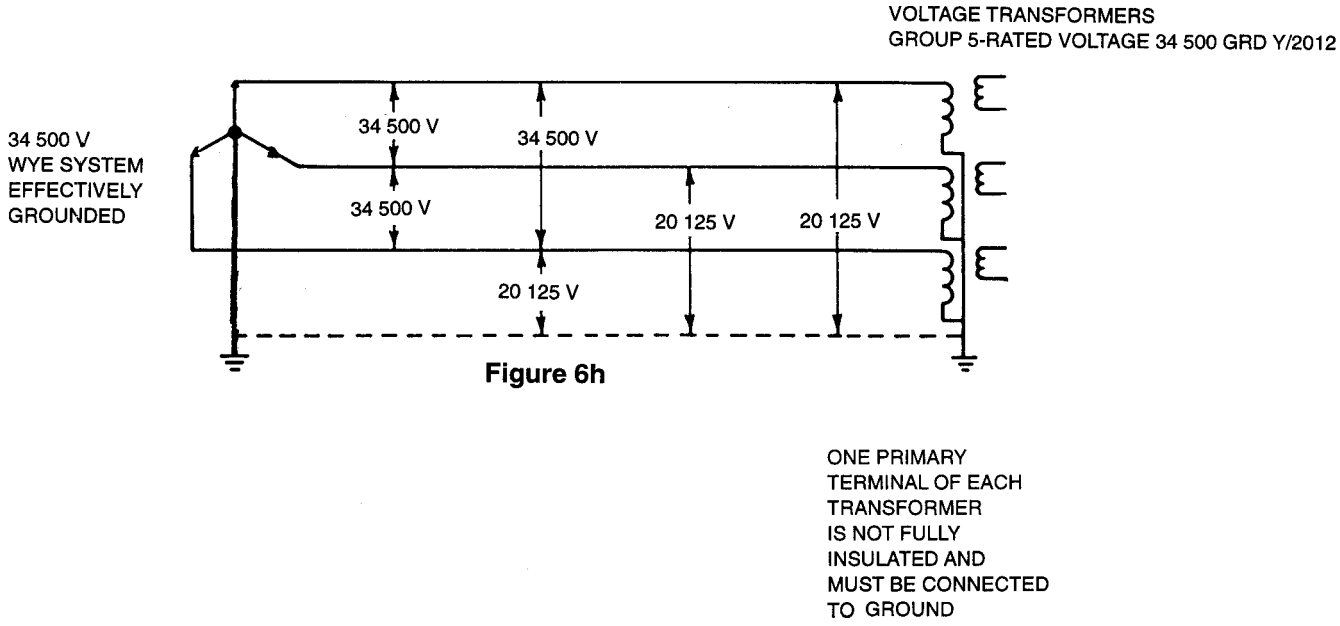

Figure 6h

Figure 6h —Typical primary connections

Copyright © 1994 IEEE All Rights Reserved

Copyright The Institute of Electrical and Electronics Engineers, Inc.
Provided by IHS under license with IEEE
No reproduction or networking permitted without license from IHS
Not for Resale

7.2 Standard burdens

Standard burdens for voltage transformers for rating purposes are shown in table 15.

Table 15— Standard burdens for voltage transformers

Characteristics on standard burdens*			Characteristics on 120 V basis			Characteristics on 69.3 V basis		
Designation	*VA*	*Power factor*	*Resistance (W)*	*Inductance*	*Impedance (W)*	*Resistance (W)*	*Inductance*	*Impedance (W)*
W	12.5	0.10	115.2	3.0400	1152	38.4	1.0100	384
X	25.0	0.70	403.2	1.0900	576	134.4	0.3640	192
M	35.0	0.20	82.3	1.0700	411	27.4	0.3560	137
Y	75.0	0.85	163.2	0.2680	192	54.4	0.0894	64
Z	200.0	0.85	61.2	0.1010	72	20.4	0.0335	24
ZZ	400.0	0.85	30.6	0.0503	36	10.2	0.0168	12

NOTE — For rated secondary voltages from 108 Vthrough 132 V or from 62.4 V through 76.2 V, the standard burdens for accuracy tests within ±10% of rated voltage are defined by the characteristic burden impedances at 120 V or 69.3 V respectively. For other rated secondary voltages, the standard burdens for accuracy tests withing ±10% of rated voltage are defined by the characteristic burden voltamperes and power factor. The characteristic voltamperes apply at rated secondary voltage and appropriate impedances are required. When transformers with rated secondary volts from 108 V through 132 V are tested at secondary voltages within ±10% of $^{1}/_{2}$ times rated voltage, the standard burdens for accuracy test are defined by the characteristic burdens impedances at 69.3 V. When transformers with other rated secondary volts are to be tested at secondary voltages within ±10% of 1/13 times rated voltage, the standard burdens for accuracy test are defined by the characteristic burden voltamperes and power factor. The characteristic voltamperes apply at 1/13 times rated voltage, for a given standard burden, the burden impedances are lower and the changes in accuracy resulting from burden current are greater than at rated voltage.

*These burden designations nave no significance except at 60 Hz.

7.3 Accuracy ratings

7.3.1 Assignment of accuracy ratings

A voltage transformer shall be assigned an accuracy rating for each of the standard burdens for which it is rated. For example, an accuracy rating might be 0.3W and X, 0.6Y, 1.2Z.

7.3.2 Accuracy classification for voltage transformers with two secondary windings or tapped-secondary windings

The burden on any two secondary terminals affects the accuracy on all other terminals. The burden stated in the accuracy ratings is the total burden on the transformer. The accuracy class shall apply with the burden divided between the secondary outputs in any manner.

Copyright © 1994 IEEE All Rights Reserved

Copyright The Institute of Electrical and Electronics Engineers, Inc.
Provided by IHS under license with IEEE
No reproduction or networking permitted without license from IHS Not for Resale

7.4 Thermal burden ratings

The thermal burden rating of a voltage transformer shall be specified in terms of the maximum burden in voltamperes that the transformer can carry at rated secondary voltage without exceeding the temperature rise given in table 4.

If no thermal burden in voltamperes rating is given, the thermal burden rating in voltamperes shall be the same as the maximum standard burden for which an accuracy rating is given.

Each winding, including the primary winding, of a multiple-secondary transformer shall be given a thermal burden rating. If only one thermal burden rating is specified, it shall be applicable to any distribution of secondary voltamperes, including the use of taps.

7.5 Nameplates

Voltage transformers shall be provided with nameplates that shall include, as a minimum, the following information (see table 5):

a) Manufacturer's name or trademark
b) Manufacturer's type
c) Manufacturer's serial number (SER), numerals only
d) Rated voltage (PRI)
e) Ratio or ratios
f) Basic impulse insulation level (BIL kV)
g) Rated frequency (in Hertz)
h) Thermal burden rating or ratings at ambient temperature or temperatures, in voltamperes in degrees Celsius
i) Accuracy rating: maximum standard burden at which the accuracy rating is 0.3 class, as a minimum.

7.6 Terminals

Primary terminals shall be electrically and mechanically suitable for use with either copper or aluminum conductors. Secondary terminals shall be electrically and mechanically suitable for use with copper conductors.

7.7 Short-circuit capability

Voltage transformers shall be capable of withstanding for 1 s the mechanical and thermal stresses resulting from a short circuit on the secondary terminals with full voltage maintained on the primary terminals. “Capable of withstanding” shall be interpreted to mean that, if subjected to this duty, the voltage transformer shall show no damage and shall be capable of meeting the other applicable requirements of this standard. The temperature of the conductors in the windings of voltage transformers under short-circuit conditions shall be determined from calculations using the methods specified in 8.6.4. The limiting temperature shall be 250 °C for copper conductors, or 200 °C for EC aluminum conductors. A maximum temperature of 250 °C shall be allowed for aluminum alloys that have resistance to annealing properties at 250 °C equivalent to EC aluminum at 200 °C, or for applications of EC aluminum where the characteristics of the fully annealed material satisfy the mechanical requirements.

7.8 Application data

Characteristic data shall be made available by the manufacturer as follows:

a) Typical ratio correction factor and phase angle curves for rated primary voltage (and, when specified, for rated primary voltage divided by the square root of 3), plotted for the standard burdens from 0 VA to the voltamperes of the burden, and also plotted for unity power factor burden from 0 VA to the voltamperes of the

Copyright © 1994 IEEE All Rights Reserved

Copyright The Institute of Electrical and Electronics Engineers, Inc.
Provided by IHS under license with IEEE
No reproduction or networking permitted without license from IHS Not for Resale

largest standard burden plotted. Ratio correction factor and phase angle data for other burdens may be calculated by methods outlined in clause 8.

b) Accuracy ratings for all standard burdens up to and including the maximum standard burden rating of the transformer.

7.9 Induced voltage test

The test voltage shall be as follows:

a) For transformers with two fully insulated primary terminals, the test voltage shall be twice the rated voltage of the windings.
b) For insulated-neutral or grounded-neutral terminal type transformers, the test voltage shall be equal to the applied voltage test kilovolts specified in table 2 for the BIL. (If the routine factory applied voltage test on insulated-neutral terminal type transformers is made at the applied voltage test kilovolts specified in table 2 for the BIL, then the induced voltage test shall be at twice the rated voltage

7.10 Routine accuracy tests

These tests shall be made on each transformer and shall consist of ratio and phase angle tests at 100% of rated primary voltage at rated frequency with zero burden, and with the maximum standard burden for which the transformer is rated at its best accuracy class.

8. Test code

This clause describes methods for performing tests specified in the other clauses of this standard. The subjects covered herein are as follows:

a) Ratio and phase angle measurement and calculation
b) Demagnetization
c) Impedance and excitation measurements
d) Polarity
e) Resistance measurements
f) Short-time characteristics
g) Temperature rise tests
h) Dielectric tests
i) Measurement of open-circuit voltage of current transformers

Many references are available as sources for the material in this clause. Those referred to specifically are listed by number in clause 9. Other references, which may be of general utility to the user of this clause, or of the complete standard, are also included in clause 9.

CAUTION — Many of the tests called for in this clause involve high voltage. Therefore, they should be performed only by experienced personnel familiar with any dangers that may exist in the test set-ups and test procedures. While some dangers are specifically pointed out herein, is impractical to list all necessary precautions.

Copyright © 1994 IEEE All Rights Reserved

Copyright The Institute of Electrical and Electronics Engineers, Inc.
Provided by IHS under license with IEEE
No reproduction or networking permitted without license from IHS Not for Resale

8.1 Ratio and phase angle measurement and calculations

8.1.1 Uncertainty limits

The maximum uncertainties for test and calculation shall be:

a) Revenue metering applications: ±0.1% for ratio and ±0.9 mrad (3min) for phase angle.
b) Other applications: ± 1.2% for ratio and ± 17.5 mrad (1 degree) for phase angle.

In selecting the measurement method to use from those listed in this clause, the maximum uncertainty should be considered. For example, item b) above includes relaying, load control, and similar applications. For these applications, acceptable, uncertainty is usually obtainable with nonprecise methods not discussed herein.

8.1.2 General

Instrument transformers considered herein are designed either for metering or for relaying applications. The ratio of a transformer can be described by the expression

$$Q1/Q2 = N_0(1 + a)e^{-jb}$$

where *Q1* and *Q2* are the primary and secondary phasors, respectively, and N_0 is their nominal ratio. The quantity *a* is the correction to the nominal ratio of the phasors and *b* is the phase angle (in radians) between phasors (positive when the secondary phasor leads the primary phasor). The expression in Cartesian form is closely enough,

$$Q1/Q2 = N_0(1 + a - jb)$$

where $(1 + a)$ is identified as the ratio correction factor (RCF).

If the transformer is to be used for revenue metering, the method of calibration must permit the determination of both the ratio and phase angle to the uncertainties prescribed in 8.1.1. If the transformer is to be used only for relaying, only the ratio needs to be determined. This may be achieved either experimentally or by computation.

8.1.3 Special considerations in calibration for metering purposes

The circuit must be arranged to avoid or minimize spurious magnetic coupling and the consequent generation of unknown electromotive forces. Thus the measuring network should be as far removed as is practical from conductors carrying large currents, and twisted bifilar or coaxial leads must be used to minimize effects from loops.

Proper location of grounds and the proper use of electrostatic shielding and guarding networks is critical. These locations are governed by the type of circuit and cannot be uniquely prescribed. The controlling criterion is arranged so that spurious capacitance current cannot enter or leave the measuring circuit. The arrangement must eliminate these leakage paths or otherwise control them so that the capacitance effects are negligible or adequately calculable.

The error of an instrument transformer is a function of current (or voltage), burden, and frequency. For the minimum uncertainty, the calibration must be made under the conditions the transformer will encounter in service. This requirement is appreciably more stringent for current transformers (CTs) than for voltage transformers (VTs), since the excitation of the CT core varies over wide limits. The voltage normally applied to the VT is nearly constant so that its excitation varies over a limited range. Also, the error of a voltage transformer at a given voltage can be computed for any burden at any power factor if the errors are known for zero burden and for another burden at known power factor.

The effect of waveform on the ratio and phase angle of instrument transformers has received little experimental attention. It is probable that uncertainties from waveform distortion are negligible under most test conditions.

Copyright © 1994 IEEE All Rights Reserved

Copyright The Institute of Electrical and Electronics Engineers, Inc.
Provided by IHS under license with IEEE
No reproduction or networking permitted without license from IHS Not for Resale

The errors of a current transformer may be influenced by its location and orientation relative to nearby high-current conductors. To achieve reproducible results, such conductors should be arranged to minimize current transformer errors.

To further ensure meaningful results, the current transformer must be demagnetized prior to calibration. Even after demagnetization, stray direct currents present in the test circuit, e.g., from rectifying action of oxidized contacts, may remagnetize the transformer and introduce errors that will not permit reproducible results. Therefore, all contacts must be clean and tight.

The errors of a voltage transformer that is not completely enclosed within a shielded structure, such as a metal tank, can be influenced by the proximity of nearby objects. However, except for high-precision laboratory measurements, this effect is usually negligible.

Heating effects are also of particular importance in accuracy testing of current transformers. Where relatively high magnitudes of primary or secondary current, or both, are involved, the test equipment should have sufficient thermal capacity to permit making the necessary measurements without significant heating. In making overcurrent accuracy tests, such as for relaying application, care should be exercised to insure that a) the short-time thermal current rating of the transformer under test is not exceeded, and b) self-heating during the measurements does not materially alter the characteristics being measured.

8.1.4 Classification and recommended use of calibration methods

Instrument transformer calibration methods may be divided into two general groups—null and deflection.

Null methods make use of networks in which appropriate phasor quantities are balanced against each other or in which their small differences are cancelled by the injection of an appropriate voltage or current. The phasor quantities may be either the currents (or voltages) of the transformer (or transformers) involved, or parameters that are known functions of these. The condition of balance or compensation is indicated by a null detector. Null methods are capable of very high precision and low uncertainty and are recommended for use in revenue metering application calibrations.

Deflection methods make use of the deflections of suitable instruments to measure quantities related to the phasors under consideration or to their difference. Most deflection methods are quite simple and straightforward but have higher uncertainty than the null methods and often impose serious restrictions on the test conditions. For these reasons deflection methods are not recommended and will not be discussed here.

Null methods may be further divided into direct-null and comparative-null classifications, either of which may be used in metering applications. Numerous calibration circuits are available for each classification and a partial list is given in the references. Several methods, arranged essentially in the order of minimum uncertainty, are set forth in 8.1.5 for current transformers and in 8.1.6 for voltage transformers. Although the choice of method depends primarily on the measurement uncertainty required, it is recommended that a laboratory select a method that will lead to an improvement in its measurement capability.

In the direct-null method the ratio and phase relation of the primary and secondary phasors (current or voltage) are determined primarily from the impedances of the measuring network, whose associated voltages (or currents) are precise functions of the primary and secondary quantities being considered.

In the comparative-null method, the transformer under test is compared with a ratio standard through an impedance network. A reference transformer serves as the ratio standard in the test of a voltage transformer while either a current transformer or current comparator may play a comparable role in the test of a current transformer. In any case, the ratio and phase angle of the reference standard must be known, in addition to the values of the critical impedance parameters.

Copyright © 1994 IEEE All Rights Reserved

Copyright The Institute of Electrical and Electronics Engineers, Inc.
Provided by IHS under license with IEEE
No reproduction or networking permitted without license from IHS Not for Resale

8.1.5 Methods for current transformers

Comparative-null methods that measure, either directly or indirectly through magnetic effects, the small difference current between the output of a ratio standard and that of a test transformer offer the minimum uncertainty in the measurement of ratio and phase angle. This must be qualified, however, if the ratio standard lacks sufficient stability or has had its parameters measured by a method of higher uncertainty. A current comparator (ampere-turn balance), when properly designed, is the most stable and accurately known ratio standard, with errors reducible to less than one part per million (1 ppm)[9] (see [B10] , [B12] , [B13] , [B15] , and [B19]).[10] Hence, the difference method (see 8.1.5.1) with a current comparator as the standard provides the lowest uncertainty. If current transformers of comparable stability and accuracy were available, they would serve equally well and the same method would yield comparably low uncertainty.

The initial design of a current comparator measuring system is generally in the province of the national laboratory, but this does not preclude its duplication in other laboratories if maximum advantage of the method is desired. However, current comparator-based test sets with only slightly greater uncertainty are commercially available. These are recommended on the basis of flexibility and ease of operation.

Direct-null methods, wherein the ratio and phase angle are determined from impedances, are limited to a minimum uncertainty of 100 ppm under the most favorable conditions, and 200 ppm under ordinary conditions. A comparable limitation exists in a comparative-null method where the outputs of the ratio standard and test transformer are compared through impedances inserted in their respective secondary circuits. These methods and those of commercial test sets of comparable or lesser capability are useful when the measurement need justifies a higher uncertainty.

The methods discussed below are presented approximately in order of increasing uncertainty.

8.1.5.1 Current comparator method (difference network)

This method, or its equivalent, can yield a minimum measurement uncertainty of 1 ppm to 20 ppm in ratio and phase angle, depending on the magnitude of the differences being measured. The current comparator serves as the standard whose output looks into that of the transformer under test while a parallel branch carries the “difference” current between the two outputs.

The current comparator, unlike the current transformer, operates under the condition of ampere-turn balance, hence with zero average flux in its magnetic core. Therefore, the principal source of error inherent in the current transformer is essentially eliminated in the current comparator.

The comparator in figure 7, embodying a simple measuring network, is commonly referred to as a compensated current comparator. A toroidal core of high permeability carries a uniformly distributed detection winding (point d in figure 7) that adequately samples the flux in the core and indicates its zero state through a detector connected across the winding terminals. Following an electrostatic shield (not shown) is compensation winding (point c in figure 7) uniformly distributed on the core; and the composite array is nested within a magnetic shield of suitable dimensions. Secondary and primary windings are placed over the shield, thereby enclosing both core and shield.

The shield functions as a second magnetic core. This core, with the primary and secondary windings, forms a current transformer that in turn becomes the first stage of a two-stage electromagnetic network with power transfer capability. The compensation winding, located inside the shield, has the same number of turns as the secondary winding and, when connected across the secondary branch (with its burden), provides a path for the error current of the first stage. Thus, when the comparator is properly designed, the summation of ampere turns applied to the core is zero and the detector indicates null. In addition, the two-stage combination appears essentially as a short circuit to the secondary winding of the current transformer connected across its terminals and imposes no burden on the transformer under test.

[9]In this standard, designation of ppm is identical to μrad when referring to phase angle.
[10]The numbers in brackets correspond to those of the bibliographical references in clause 9.

Copyright © 1994 IEEE All Rights Reserved

Copyright The Institute of Electrical and Electronics Engineers, Inc.
Provided by IHS under license with IEEE
No reproduction or networking permitted without license from IHS Not for Resale

With the secondary winding of the transformer thus connected and with its primary winding in series with that of the comparator, ampere-turn balance is maintained if the transformer under test has zero error; otherwise, its error current enters the comparator and upsets the balance. The resistor capacitor (RC) network, arranged to carry the “difference” in current (injected by way of a small voltage available from either or both resistors), is adjusted to restore balance. Under these conditions, the error of the current transformer[11] under test is given by:

$$\in = \pm(r/R + jwrC)$$

where the real term equals ratio error (r/R) and the imaginary term (jwrC) equals phase angle error. If the comparator exhibits an error ($\in_s$), this must be included. However, as stated earlier, a properly designed comparator will generally have errors less than 1 ppm. Connection of the RC network to points a or b in figure 7 permits measurement of both positive and negative ratio and phase angle errors.

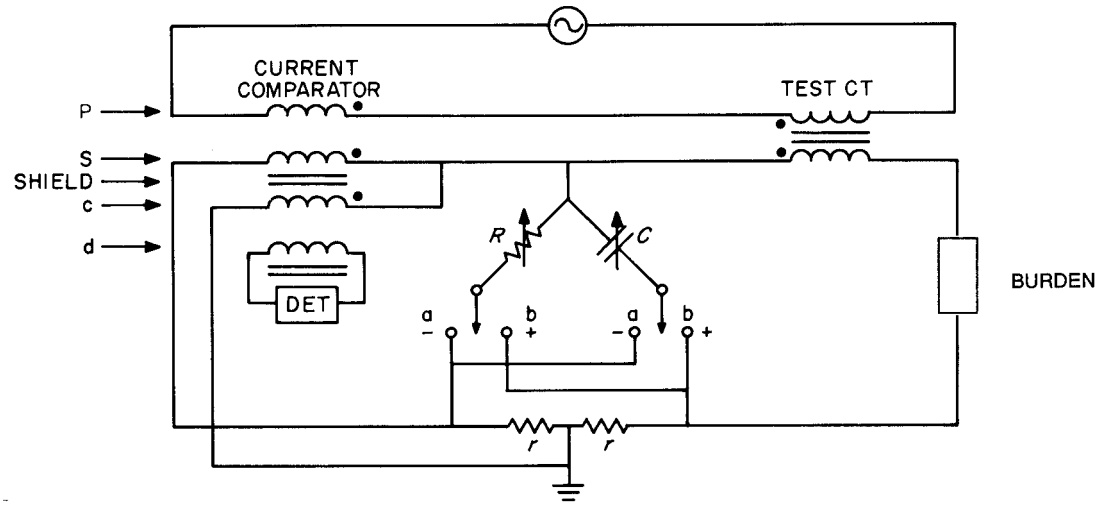

Figure 7 —Current transformer accuracy test (comparative-null) compensated current comparator

[11]The error of a transformer, rather than the correction, appears frequently. It is the negative of the correction and is ascribed to the ratio $1_s 1 1_p$.

Copyright © 1994 IEEE All Rights Reserved

Copyright The Institute of Electrical and Electronics Engineers, Inc.
Provided by IHS under license with IEEE
No reproduction or networking permitted without license from IHS Not for Resale

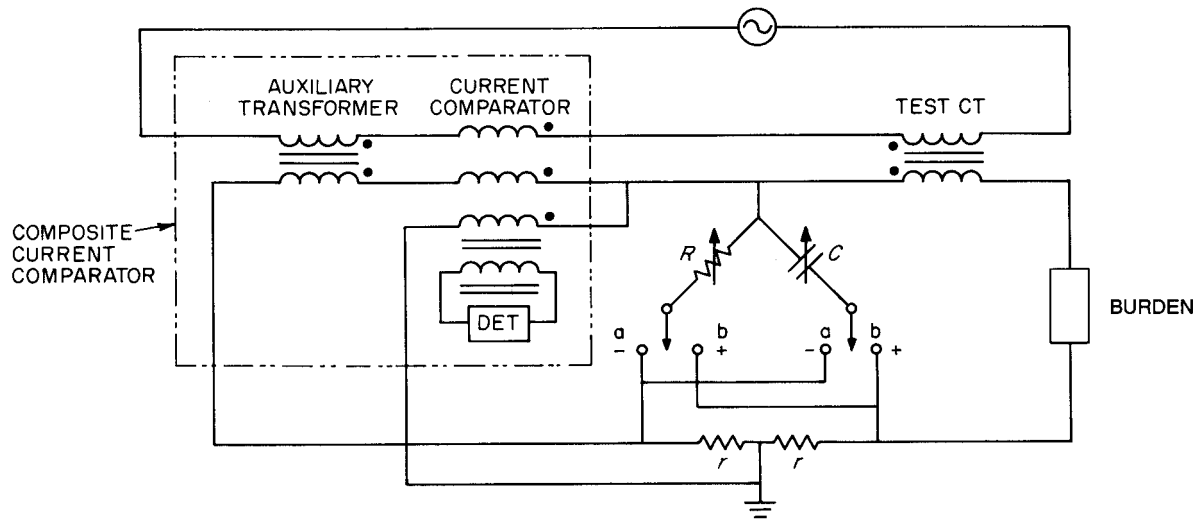

Figure 8 —Current transformer accuracy test (comparative-null) composite current comparator

The composite current comparator in figure 8 is relatively simple to construct and offers greater flexibility in its application [B19] . The comparator in combination with an auxiliary transformer of the same nominal ratio operates on the same principle as that of the compensated current comparator [B4] . The auxiliary transformer replaces, in effect, the first stage (the transformer section) of the compensated comparator and provides for the transfer of power. Its ratio and phase angle need not be known to better than 1%. The three current-carrying windings lie outside a magnetic shield whose sole function is to shield the core and sensing elements from extraneous magnetic fields. The balancing procedure and equations are the same as those indicated for the circuit of figure 7.

Figure 9 emphasizes a second mode of operation for the current comparator of figure 8 in conjunction with another type of measuring network. The comparator is made self-balancing by using an operational amplifier to supply the current in its error winding. The measuring network includes, in addition to the familiar RC branch, a simple current comparator of adjustable ratio for sensing the error current (I_x) of the test transformer. The detector, originally connected to the detection winding of the standard, figure 8, occupies a comparable position in the measuring comparator.

8.1.5.2 Standard current transformer (direct-null difference network)

The uncertainty of this method is governed by the current transformer that serves as the ratio standard. However, it may yield an uncertainty comparable to that described in 8.1.5.1, provided the standard is sufficiently stable and has been appropriately calibrated.

The difference circuit indicated in figure 10 is cited as an example of the method because of its versatility and the ease with which low uncertainty is obtained [B19] . (A comparable circuit might, for example, employ electrical coupling between the secondary windings of the transformer and provide a path for the error current and circuitry for making the difference measurement.)

The circuit of figure 10 incorporates a simple and easily constructed current comparator that magnetically links the two secondary circuits and forms part of the measuring network. With the primary windings of the transformers in series, the secondary winding of the standard current transformer is connected in series with a comparator winding of n_s turns through a resistor $2r$ tapped at its midpoint. The secondary winding of the test transformer is connected in series with a second comparator winding of n_x tums. The comparator windings are oriented so that their ampere-turns act in opposition on the comparator core and at balance satisfy the relation

Copyright © 1994 IEEE All Rights Reserved

Copyright The Institute of Electrical and Electronics Engineers, Inc.
Provided by IHS under license with IEEE
No reproduction or networking permitted without license from IHS
Not for Resale

$I_{ss} \times n_s = I_{sx} \times n_x$

where I_{ss} and I_{sx} are the nominal secondary currents of the standard and test transformers, respectively.

In figure 10 an error winding of n_e turns, distributed on the comparator core, is connected across either or both of the r segments (depending on the relative errors of the two transformers) through an RC network, and null balance is obtained on the comparator's detection winding by adjusting R and C. The error of the transformer under test is given by

$\in = \in_s \pm (n_e/n_s)\ ((r/R) + jwrC)$,

where $\in_s$ is the error of the standard current transformer. The self-balancing feature and measuring network of figure 9 are equally applicable. A simple, single-stage comparator with the detection winding enclosed in a thin magnetic shield is adequate. Unlike many equivalent methods, the standard and test transformers need not have the same nominal ratio. Furthermore, the comparator can be designed so that a transformer can be calibrated at up to four times rated current against a standard current transformer operating at rated current.

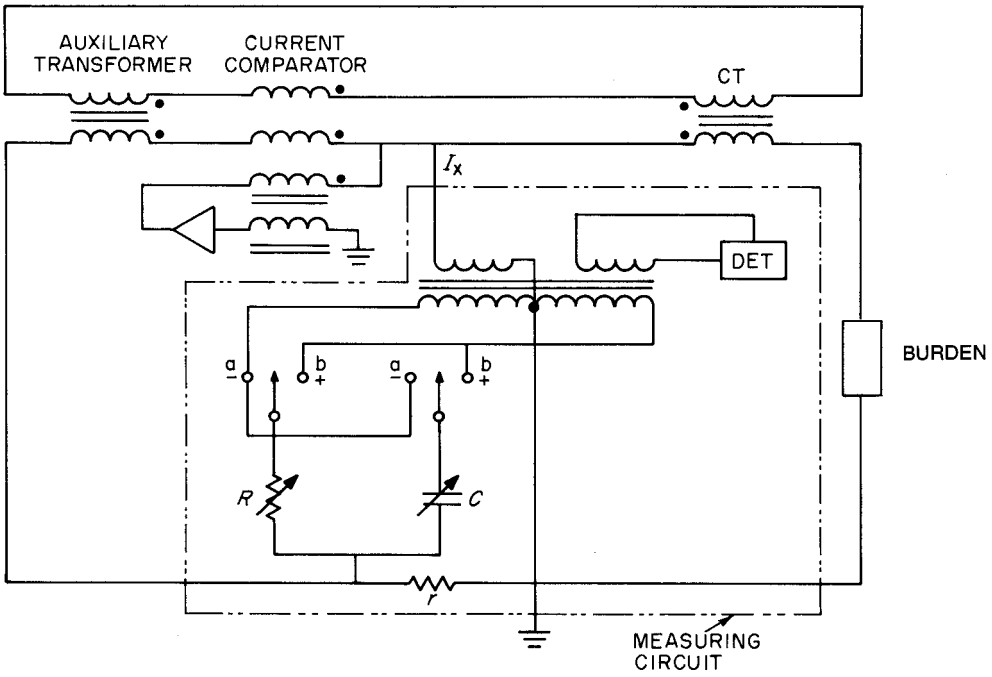

Figure 9 —Current transformer accuracy test (comparative-null) composite current comparator and operational amplifier

Copyright © 1994 IEEE All Rights Reserved

Copyright The Institute of Electrical and Electronics Engineers, Inc.
Provided by IHS under license with IEEE
No reproduction or networking permitted without license from IHS
Not for Resale

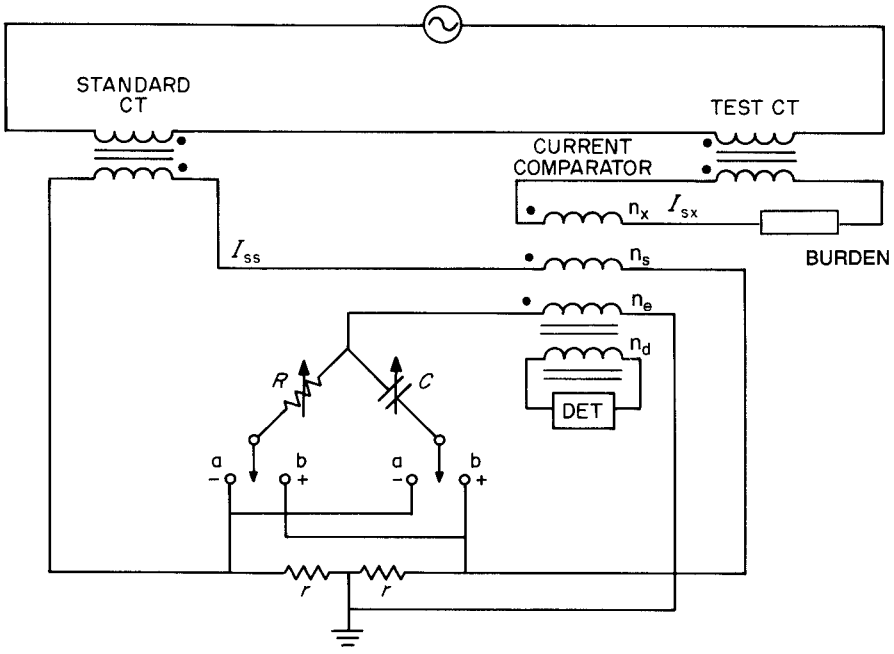

Figure 10 —Current transformer accuracy test (comparative-null) composite current comparator and standard current transformer

8.1.5.3 Two-impedance method (direct-null network)

The method indicated in figure 11 serves solely as an example of the various direct-null networks available. Alternative methods may employ, for example, two resistors and an adjustable capacitor or two mutual inductors with a small resistance for quadrature balance. The minimum uncertainty from any of these networks is about 100 ppm. This limit is set primarily by the difficulty encountered in designing stable impedance elements and in determining their characteristics.

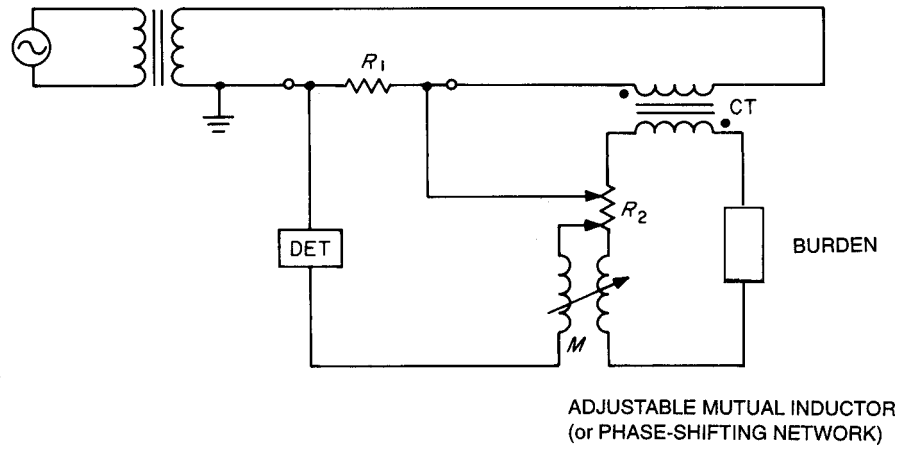

Figure 11 —Current transformer accuracy test with direct-null network

Referring to figure 11, the primary winding of the transformer is connected in series with a fixed four-terminal noninductive resistor (*R1*) that must carry the large primary current without incurring excessive changes from self-

Copyright © 1994 IEEE All Rights Reserved

Copyright The Institute of Electrical and Electronics Engineers, Inc.
Provided by IHS under license with IEEE
No reproduction or networking permitted without license from IHS Not for Resale

heating. (With published designs the current limit is about 2500 A.) The secondary winding is connected in series with an adjustable four-terminal resistor (*R2*) and the primary winding of a mutual inductor (*M*). The potential terminals of the resistors are connected in voltage opposition through a suitable detector in series with the secondary winding of the mutual inductor. *R2* must be designed so that its resistance as seen by the secondary winding remains constant, while its four-terminal resistance as seen by the detector is adjustable. Balance is obtained by adjusting *R2* and *M* for a null on the detector. The equations of balance for ratio and phase angle are to a first approximation

$N_x = R2/R1$

and

$\gamma_x = wM/R2 + (\theta_1 - \theta_2)$ [in radians]

where *R1* and *R2* are the ac values of the resistors, and θ_1 and θ_2 are the phase angles in radians (to convert to minutes, multiply by 3438).

To achieve minimum uncertainty, special designs are required for the resistors and the inductor. For example, the construction of the resistors must ensure a stable resistance, a negligible (or small but known) phase angle, negligible skin effect, and freedom from external magnetic fields; and the inductor, being small in value, must be astatic. (Suitable designs are described in [B1] , [B2] , and [B4] .) It is to be noted that *R2* and the primary of *M* impose a minimum limit to the burden on the secondary winding of the transformer.

8.1.5.4 Standard current transformer method (comparative-null direct comparison network)

A typical circuit for this method, indicated in figure 12, closely resembles the one described in 8.1.5.3, the difference being that resistor *R1* in figure 11 is replaced by the standard transformer and its four-terminal resistor *R3* [B18] . If the standard has been calibrated by one of the more accurate methods, the minimum uncertainty available from this method is very nearly the same as that given in 8.1.5.3. The balancing procedure is identical to that described in 8.1.5.3. The ratio (N_x) and phase angle (β_x) equations are, to a first approximation

$N_x = N_s(R2/R3)$

and

$\beta_x = \beta_s + wM/R2 + (\theta_3 - \theta_2)$ [in radians]

where N_s and β_s are the ratio and phase angle of the standard and θ_2 and θ_3 are the phase angles of *R2* and *R3*.

It is important to note that the ratio of the standard need not match that of the transformer under test. Also, as stated in 8.1.5.3, other appropriate impedances can be used in place of those shown in figure 12.

Copyright © 1994 IEEE All Rights Reserved

Copyright The Institute of Electrical and Electronics Engineers, Inc.
Provided by IHS under license with IEEE
No reproduction or networking permitted without license from IHS Not for Resale

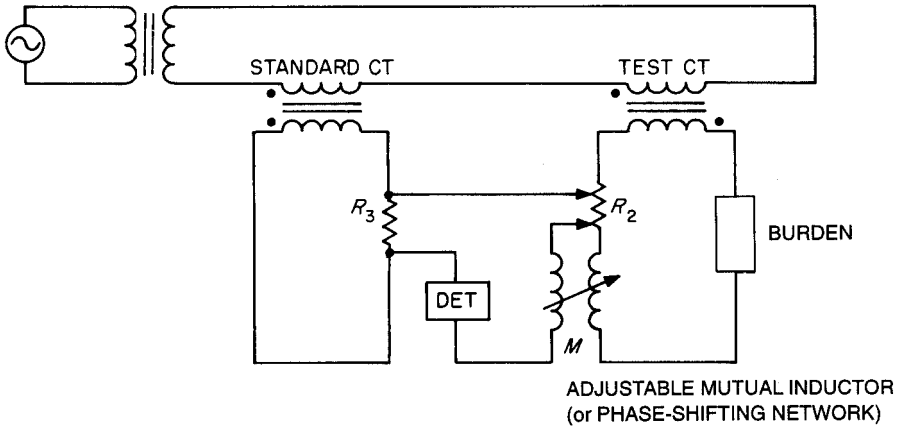

Figure 12 —Current transformer accuracy test with standard current transformer (comparative-null)

8.1.6 Methods for voltage transformers

Direct-null methods in which precision capacitors are the principal elements have lowest inherent uncertainty and accommodate the widest range of voltages. These methods may be divided into two groups.

a) *Group one.* The two capacitors are connected in series as a voltage divider to accommodate the voltages of the primary and secondary windings, which may be connected in either the additive or subtractive mode. A detector properly located between the two points of nearly equal voltage is brought to null by adjusting or injecting suitable and measurable parameters.
b) *Group two.* Each capacitor is connected in series with a winding of a current comparator and energized separately from the respective grounded transformer windings. Ratio balance is made by adjusting turns on one or both of the comparator windings while an injection network operating into a third winding provides the adjustment for phase angle. The minimum uncertainty for these methods varies from 2 ppm to 20 ppm for ratio and phase angle, depending on the ratio and voltage of the test transformer.

Direct-null methods may also use resistive dividers. These, however, are limited to an minimum uncertainty of about 100 ppm in both ratio and phase angle and to a maximum voltage of about 30 kV. The direct-null method may also utilize a pseudo-bridge circuit. This network is similar in form to that of the second capacitive group, except that the current comparator is omitted and its two main windings replaced, in most instances, by adjustable *RC* networks. The null detector occupies its usual position between corresponding points of nearly equal voltage. In general, the minimum uncertainty of this method is about 100 ppm in ratio and phase angle; however, with refinements and careful measurements the uncertainty can be reduced to about 30 ppm.

Comparative-null methods determine the ratio and phase angle of a transformer by comparing it with a standard or reference transformer whose parameters are known. The primaries of the two transformers are connected in parallel to a common source and the measurements are made at the secondary voltage level The common terminals of all four windings are maintained at ground potential. Two types of comparative-null networks (difference and direct comparison) may yield uncertainties less than 100 ppm, excluding the uncertainties in the parameters of the standard. In all cases, complete and proper shielding is required to minimize uncertainty. The methods discussed below are presented approximately in order of increasing uncertainty.

8.1.6.1 Current comparator-capacitance ratio method (direct-null)

This method has been used to a minimum uncertainty of 20 ppm up to 325 kV, and more recent developments and refinements have extended its capabilities to about 2 ppm (see [B11] , [B14] , and [B16]). An advantage of the method is that the circuit can be used to measure the ratio of the two principal capacitors (at low voltage if need be) at the time

Copyright © 1994 IEEE All Rights Reserved

Copyright The Institute of Electrical and Electronics Engineers, Inc.
Provided by IHS under license with IEEE
No reproduction or networking permitted without license from IHS Not for Resale

of the transformer calibration. The basic circuit for the calibration of a transformer is indicated schematically in figure 13. Low-loss capacitors *C1* and *C2* accommodate the respective voltages of the primary and secondary windings that are connected in subtractive polarity. The current comparator is shown as a single magnetic core with three windings. Winding *n2* is adjustable in coarse steps and serves as a multiplier, while *n1* provides the fine adjustment for final ratio balance. Operational amplifiers *A1* and *A2* across variable resistor *R* produce a voltage *Vq* proportional to and in phase with *V1*. *Vq*, in turn, injects a current *iq*, proportional to *R*, into *n1* to provide quadrature balance. Ampere-turn balance is indicated by null detector, *D*, connected across sensing winding *nd*. The balance equations for ratio and phase angle are, to a first approximation

$$N_x = V1/V2 = (C2 \times n2)/(C1 \times n1)$$

$$Y_x = (R/R1)(w \acute{} Rs \acute{} C_f) \text{ [in radians]}$$

Since $wRsC_f$ is constant and arbitrary in value, its value can be selected to make V_x direct reading in radians at 60 Hz. Full advantage of this method may be realized in a national laboratory, but this does not preclude its use in other measurements laboratories, since details are available in references in the bibliography (see clause 9.).

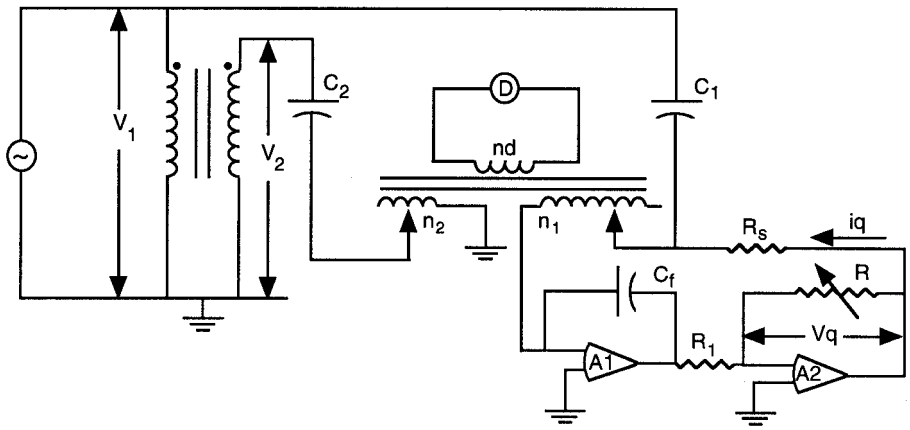

Figure 13 —Voltage transformer accuracy test (direct-null) current comparator— Capacitance ratio method

8.1.6.2 Capacitance divider method (direct-null network)

A circuit that can yield an uncertainty as small as 20 ppm in ratio and 20 μrad in phase angle is indicated in figure 14 (see also [B6] and [B9]). The transformer windings are connected in the additive mode with capacitors *C1* and *C2* accommodating, respectively, the primary and secondary voltages. Adjustments for ratio and phase angle balance are provided by two inductive voltage dividers. Divider *B* is used for the ratio balance. Quadrature balance is obtained from divider *A* by injecting a small current through the high resistance *R*. Measurement of both positive and negative errors is made possible by extending the adjustment above unity on B and below zero on *A*.

The ratio is given by

$$N_x = (C2/C1) \times N_b$$

and the phase angle by

$$\gamma_x = N_c \times 1/wRC2 \text{ [in radians]}$$

when N_a and N_b are the ratios of the respective dividers.

Copyright © 1994 IEEE All Rights Reserved

Copyright The Institute of Electrical and Electronics Engineers, Inc.
Provided by IHS under license with IEEE
No reproduction or networking permitted without license from IHS Not for Resale

The uncertainty of the measurement depends primarily on the adequacy of the shielding and on the uncertainty to which the capacitance ratio is known. The capacitance ratio can best be determined to the highest accuracy by using a transformer-ratio-arm bridge. This ratio should be determined at the time of the transformer calibration, unless it has been demonstrated previously to have sufficient stability for the calibration at hand.

Particular attention must be given capacitor *C1* when calibrating transformers of large ratio. *C1* must be able to accept the high voltage of the primary winding without exhibiting instability or an unduly large voltage dependence. These factors and others that govern the uncertainty of a transformer calibration are references in the bibliography (see clause 9.).

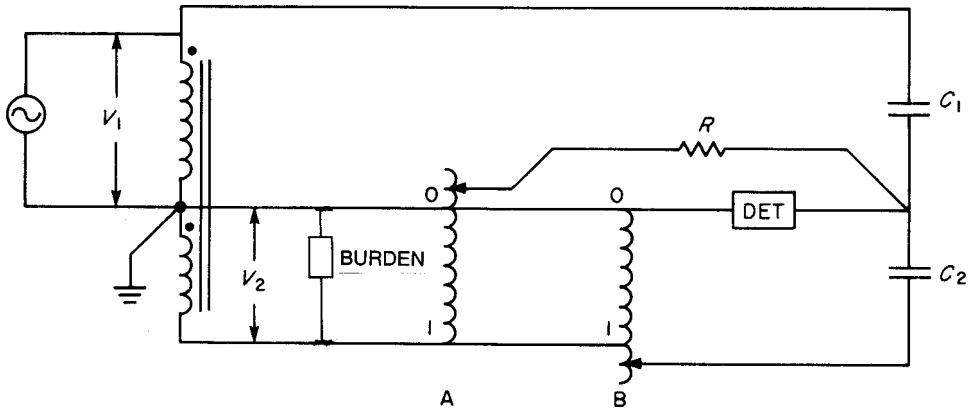

Figure 14 —Voltage transformer accuracy test (direct-null)—Capacitance divider method

8.1.6.3 Resistance divider method (direct-null network)

A resistive divider network is limited to a minimum uncertainty of about 100 ppm. Even at this level of uncertainty it cannot be used much above 30 kV. These limits arise principally from the effects of self-heating within the elements and from capacitance currents that bypass portions of the resistance string. The former can be minimized by measuring the resistance ratio immediately following measurement of the second transformer ratio, and the latter by providing the resistance elements with shields maintained at proper potentials by a parallel guard string. An example of this type of network, without the guard string is shown in figure 15 (see also [B17]). The resistance string in series with the primary of the mutual inductor *M* is connected across the high-voltage winding. A voltage equal and opposite to that across the secondary winding of the transformer is provided by adjusting *M* and the resistance *R* for a null on the detector. The equations for ratio and phase angle are, to a first approximation

$N_x = V_p/V_s$, which equals R/r

and

$\gamma_x = w(M/r - L\ell/R)$ in radians

where $L\ell$ takes account of the phase angle of *R* and the self-inductance of the primary winding of the mutual inductor. Shielding and guarding networks and means of measuring the divider ratio are described in [B5] and [B7] .

Copyright © 1994 IEEE All Rights Reserved

Copyright The Institute of Electrical and Electronics Engineers, Inc.
Provided by IHS under license with IEEE
No reproduction or networking permitted without license from IHS Not for Resale

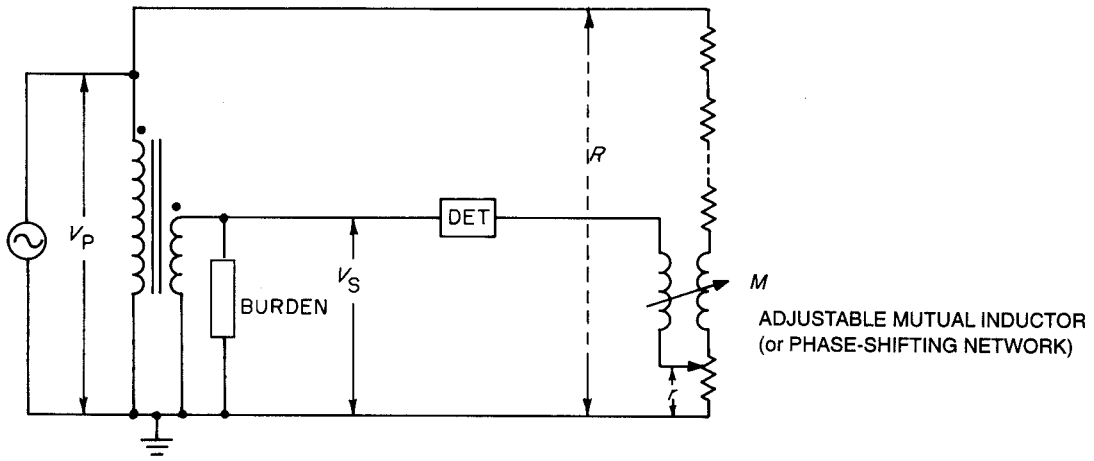

Figure 15 —Voltage transformer accuracy test (direct-null)—Resistance divider method

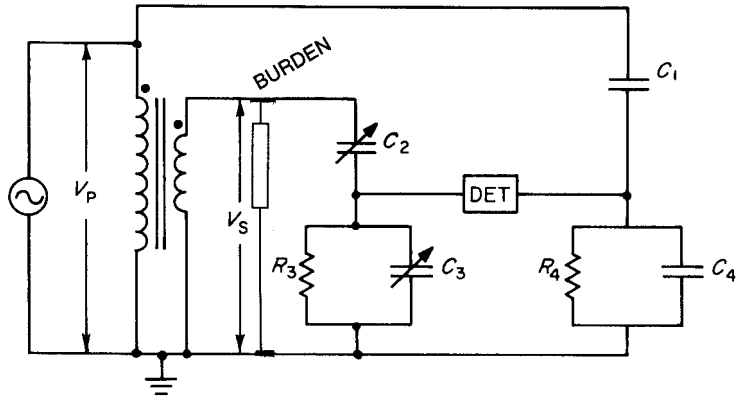

Figure 16 —Voltage transformer accuracy test (direct-null)—Pseudo-bridge method

8.1.6.4 Pseudo-bridge method (direct-null network)

Although an uncertainty of 30 ppm at a primary voltage of (400000) / $\sqrt{3}$ V has been reported for this method, it is more appropriate to assign a practical limit of 100 ppm. An example of the method is indicated by the simplified circuit of figure 16 (see [B3] , [B5] , and [B21]). With the bridge as shown, balance is obtained by adjusting capacitances *C2* and *C3.* The equations for ratio and phase angle are

$$N_x = V_p/V_s = C2/C1 \times R4/R3$$

and

$$\gamma_x = w[R3 \times (C1 + C3) - R4 \times (C2 + C4)] \text{ [in radians]}$$

Since all parameters enter the equations and are of first order, the uncertainty is expected to be relatively large. However, the situation can be improved markedly if the relation among the parameters (as they appear in figure 16) is first determined in a Schering bridge, then followed by the transformer measurement with the two *RC* networks interchanged. In the first instance, the ratio *R4/R3* is set equal to the square root of N_0, where N_0 is the ratio of the transformer to be calibrated, and balance is obtained by adjusting *C2* and *C3.* With C1 and R3 constant and the settings

Copyright © 1994 IEEE All Rights Reserved

Copyright The Institute of Electrical and Electronics Engineers, Inc.
Provided by IHS under license with IEEE
No reproduction or networking permitted without license from IHS Not for Resale

on *C2* and *C3* unchanged, the network is switched to that in figure 16, except that the *C4R4* and *C3R3* branches are interchanged. Balance is obtained by adjusting *C4* and *R4*. The more important advantage from this technique is that the ratio dealt with is the square root of N_0, rather than N_0. Proper shielding and maintenance of correct shield potentials are required for minimum uncertainty.

8.1.6.5 Comparative-null methods

These methods determine the ratio and phase angle of a transformer by comparing its performance with that of a standard or reference transformer whose parameters are known. The primary windings of the two transformers are connected in parallel to a common source and the measurements are made at the secondary voltage level. The common terminals of all four windings are maintained at ground potential.The circuitry of most of the methods heretofore considered could be adapted to this form of measurement. Excluding the uncertainties in the ratio and phase angle of the standard, the uncertainty can be essentially the same. However, if these approaches are to be used, either a difference method (counterpart of the one for current transformers) or one in which the components of the measuring circuit are extremely stable and easily measured to the required uncertainty is recommended. A typical comparative-null circuit is shown in figure 15 [B20] .

Measurement uncertainty, exclusive of errors in the standard transformer is within 2 ppm for ratio and 10 μrad for phase angle at 60 Hz and 400 Hz. Ratios ranging to several times that of the standard transformer can be measured.

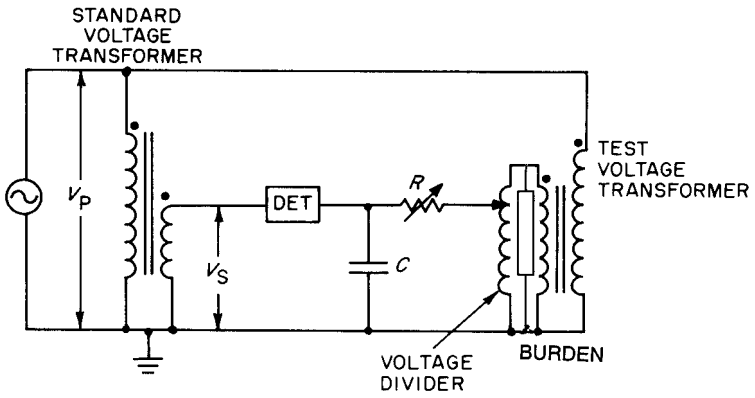

Figure 17 —Voltage transformer accuracy test—Comparative-null method

A high-impedance inductive voltage divider with a six-dial resolution is connected across the secondary winding of the transformer under test. The in-phase voltage balance is obtained by adjusting the output of the divider, and the quadrature balance is realized by adjusting either *R* or *C*. If the secondary voltage of the test transformer leads that of the reference transformer, resistor *R* has the position shown. For lagging angles the positions of R and the detector are interchanged. The equations of balance for the circuit shown are

$$N_x = N_s/N_d$$

and

$$\gamma_x = \theta_s + wCR \text{ [in radians]}$$

where N_x and N_s are the ratios of the unknown and standard transformers, respectively, and N_d is the ratio of the inductive voltage divider.

Copyright © 1994 IEEE All Rights Reserved

Copyright The Institute of Electrical and Electronics Engineers, Inc.
Provided by IHS under license with IEEE
No reproduction or networking permitted without license from IHS
Not for Resale

8.1.7 Accuracy calculations for current transformers

Accurate values of ratio and phase angle are not obtainable by calculation from the open-circuit characteristics of a current transformer. However, for certain types of current transformers adequate methods arc available for the determination of errors for nonmetering applications, if suitable constants for their equivalent circuits can bc estimated or determined.

For C or K types of current transformers with negligible leakage fluxes, the equivalent circuit shown in figure 18 and the vector diagram shown in figure 19 are suitable for calculations. The bushing type current transformer with the secondary winding appropriately distributed around the core, and with a “through” primary conductor symmetrically located in the opening, can thus be represented by figures 18 and 19 for purposes of accuracy calculations, provided the stray fluxes entering the core from the return conductor or other external sources remain negligible.

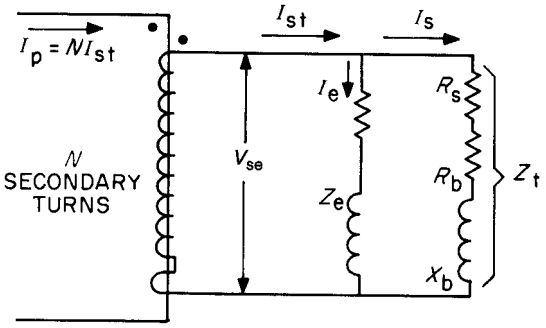

Figure 18 —Simplified equivalent circuit of current transformer on *N* secondary turns base

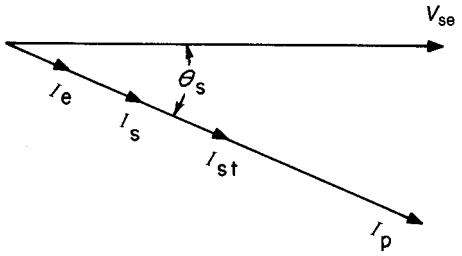

Figure 19 —Phasor diagram of figure 18

Since T type current transformers have appreciable leakage or stray fluxes entering the core, they cannot be represented adequately by an equivalent circuit. This type of current transformer does not lend itself to simple, accurate calculations. Instead, typical design test data are used for this purpose.

NOTE — The methods discussed in 8.1.8 through 8.1.10 are not accurate enough for calculating current transformer errors for revenue metering applications.

8.1.8 Calculation of current transformer performance for relaying application from excitation data and equivalent circuits

Several methods are available for calculating current transformer performance from excitation characteristics, secondary winding constants, and burden data with sufficient accuracy for relaying service, if the construction of the transformer is such that leakage fluxes can be neglected. These methods include algebraic, current phasor, graphical, and admittance phasor. All are based on the addition of the secondary burden currents and the transformer excitation currents.

Copyright © 1994 IEEE All Rights Reserved

Copyright The Institute of Electrical and Electronics Engineers, Inc.
Provided by IHS under license with IEEE
No reproduction or networking permitted without license from IHS Not for Resale

The algebraic addition of these currents is adequate for most relay applications because for the lower power factor burdens (e.g., 0.5 lag) the burden and excitation currents are approximately in phase over a considerable range of burdens and currents. When the burden and excitation currents are not in phase, the calculated ratio error is greater than that which would have been obtained by the phasor addition of currents. The determination of phase angle is unnecessary for most relay applications.

8.1.9 Application of calculating methods to type C or K relaying accuracy current transformers

As was discussed in 8.1.7, calculating methods are not practical for type T current transformers. Therefore, the following discussion is primarily applicable to types C or K, i.e., bushing-type current transformers for relaying service. Since these transformers are generally multi-ratio, the most useful form in which the open circuit transformer excitation characteristics may be given is a family of curves similar to figure 4 showing the excitation voltage and currents on the secondary winding turns base for each ratio. These curves are usually determined from test data taken on a typical unit of a given design by the method covered in 8.3.2.

8.1.10 Calculation of current transformer ratio by the algebraic method

The current transformer standards covering relaying accuracy and application data for relaying service have been written on the basis of utilizing the advantages and simplicity of excitation data and calculating methods where applicable. The following method may be used for calculating the relaying performance and accuracy ratings of type C or K relaying accuracy rated current transformers. As stated in 8.1.8, this method is based on the assumption that the burden and excitation currents are in phase. It also assumes a single-turn primary winding such as in bushing, window, or bar-type transformers, so constructed that the effect of leakage fluxes on its performance is negligible. The equivalent circuit and phasor diagram for such transformers are shown in figures 18 and 19, respectively. The ratio correction factor values obtained by test will not exceed the values calculated by this method within the stated limitations.

The following definitions and equations apply to figures 18 and 19:

N =	secondary turns on transformer for ratio on which transformer error is to be calculated - from data sheet or excitation curve sheet (see figure 4 and typical curves)
R_s =	resistance of transformer secondary from data sheet or excitation curve sheet (see figure 4)
R_b =	resistance of secondary burden including secondary leads
X_b =	reactance of secondary burden
Z_t =	the square root of $[(R_s + R_b)^2 + X_b^2]$, which equals the magnitude of secondary circuit impedance
θ_s =	$\tan^{-1} (X_b/(R_s + R_b))$, which equals the power factor angle of secondary circuit
I_s =	assumed value of secondary current at which transformer ratio is to be calculated
V_{se} =	$I_s Z_p$ which equals the excitation voltage required to obtain I_s
Z_e =	V_{se}/I_e, which equals the excitation impedance of transformer on secondary N turns base for any specific value of I_e obtained from excitation curve. The value of Z_e is not required in the calculation, but is shown in the equivalent circuit (see figure 18)
I_e =	excitation current required to obtain a specific value of V_{se}, obtained from excitation curve
I_{st} =	$I_s + I_e$, which equals the primary current on secondary N turns base
I_p =	NI_{st}, which equals the primary current required to obtain I_s in the secondary
True ratio =	I_p/I_s, which equals the NI_{st}/I_s

If marked ratio and secondary N turns are equal:

RCF = I_{st}/I_s
Percent ratio = $(I_{st}/I_s) \times 100$
Percent ratio error $\leq (I_e/I_s) \times 100$

Copyright © 1994 IEEE All Rights Reserved

Copyright The Institute of Electrical and Electronics Engineers, Inc.
Provided by IHS under license with IEEE
No reproduction or networking permitted without license from IHS Not for Resale

8.1.11 Accuracy calculations for voltage transformers

Several methods are available for calculating the accuracy of voltage transformers at different burdens. These methods, utilizing winding impedances and core excitation characteristics, are subject to some limitations and give results having less precision than those methods that employ a combination of test and calculation.

The latter methods, using measured values of true ratio and phase angle at zero burden and one other burden within the maximum standard burden rating of the transformer, yield results having a high degree of precision. This is possible because both the ratio and the phase angle of a voltage transformer give practically straight lines when plotted against secondary current at a given voltage, power factor, and frequency.

8.1.12 Calculation of voltage transformer ratio and phase angle from known zero and rated burden data

In this method the true ratio and phase angle of a voltage transformer are known at both zero burden and one other burden, either a rated standard burden or, more conveniently, a pure resistive or capacitive burden, for a given voltage and frequency. At the same voltage and frequency, the accuracy for any other burden and power factor may be calculated from the following equations:[12]

B_0	= the zero burden for which RCF and θ are known
B_t	= a burden for which RCF and θ are known
B_c	= the burden for which RCF and θ are to be calculated
θ_t and θ_c	= power factor angles of burdens B_t and B_c, respectively (in radians) NOTE—θ_t and θ_c are positive angles for lagging power factors.
RCF_0, RCF_p and RCF_c	= transformer ratio correction factors for burdens B_0, B_t, and B_c, respectively
γ_o, γ_p, γ_c	= transformer phase angles in radians for burdens B_0, B_t, and B_c, respectively NOTE—γ is considered positive when the secondary voltage leads the primary voltage.
RCF_d	= RCF_t - RCF_0, which equals difference between the transformer ratio correction factors for burdens B_t and B_0
γ_d	= γ_t - γ, which equals the difference between the transformer phase angles burdens B_t and B_0, in radians
RCF_c	= $RCF_0 + [B_c/B_t]\ [RCF_d s \times \cos(\theta_t - \theta_c) + \gamma_d \times \sin(\theta_t - \theta_c)]$
γ_c	= $\gamma_0 + [B_c/B_t][\gamma_d \times \cos(\theta_t - \theta_c) - RCF_d \times \sin(_t - \theta_c)]$ radians

NOTES:

1 — Multiply radians by 1000 to obtain milliradians (mrad). If minutes are desired, multiply by 3438.

2 — These equations provide an analytical determination of voltage transformer accuracy. Although they are quite long, a simple computer or programmable calculator program can be written to perform the necessary calculations quickly and accurately. Also, it has been shown that graphical solutions of these equations by means of special scaled polar coordinate paper and a protractor are sufficiently accurate for most revenue metering applications.

The equations for RCF_c and γ_c above reduce to the following simpler form in the case where the burden for *RCF* and γ are known to be at unity power factor.

$$RCF_c = RCF_0 + [B_c/B_t][RCF_d \times \cos\theta_c - \gamma_d \times \sin\theta_c]$$

$$\gamma_c = \gamma_0 + [B_c/B_t][\gamma_d \times \cos\theta_c + RCF_d \times \sin\theta_c] \text{ radians}$$

where

[12]These equations are approximations. Although they yield accurate results for many cases, the user should be aware that for large burdens (e.g., Z or ZZ) intolerable errors may be introduced unless the voltamperes of the known burden are equal to or greater than those of the unknown burden, and the values for the known and the zero burdens are measured very accurately. This problem is minimized for all cases if the magnitude of the known burden is made nominally equal to the magnitude of the rated burden of the transformer under test.

Copyright © 1994 IEEE All Rights Reserved

Copyright The Institute of Electrical and Electronics Engineers, Inc.
Provided by IHS under license with IEEE
No reproduction or networking permitted without license from IHS Not for Resale

B_t = a unity power factor burden
γ_d is in radians

For burdens not exceeding the burden for which RCF and γ are known, the foregoing calculations will produce the same accuracy as would be obtained from the actual tests at the unknown burden. When the calculations are used for determining performance at greater burdens, a lower accuracy will be obtained.

Consideration should be given to the effects of the increased heating due to the heavier burdens.

8.2 Demagnetization

Three methods are presented below for demagnetizing current transformers:

a) *Method 1.* Connect the current transformer in the test circuit as shown in figure 20. Apply enough current to the high-turn winding (usually X1-X2) to saturate the core of the transformer as determined by the ammeter and voltmeter readings, then slowly reduce the current to zero. Rated current of the transformer must not be exceeded.

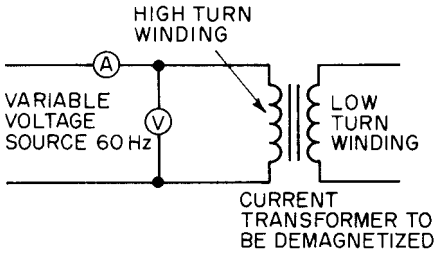

Figure 20 —Method 1: Circuit for demagnetizing current transformers

b) *Method 2.* Connect the current transformer in the test circuit as shown in figure 21. Pass rated current through the low-turn winding, (usually H1-H2). Increase the resistance R in the high-turn winding, (usually X1-X2), circuit until the transformer core is saturated; then slowly reduce the resistance to zero and disconnect the current source. Saturation of the core is indicated by a reduction of current in the high-turn winding circuit.

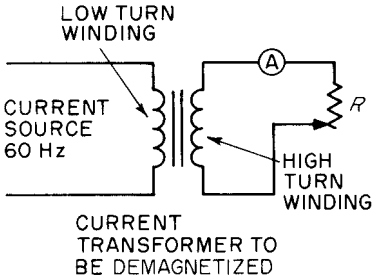

Figure 21 —Method 2: Circuit for demagnetizing current transformers

WARNING A continuously variable resistance must be used to avoid opening the high-turn winding circuit when resistance values are changed, since, as the resistance is increased, the voltage across the resistance will approach the dangerous open circuit value.

Copyright © 1994 IEEE All Rights Reserved

Copyright The Institute of Electrical and Electronics Engineers, Inc.
Provided by IHS under license with IEEE
No reproduction or networking permitted without license from IHS
Not for Resale

c) *Method 3.* The method presented here applies only to multi-ratio CTs, since a controlled direct current must be passed through a separate secondary section from that connected to a fluxmeter, as shown in figure 22. The method requires the core to be saturated with dc in both positive and negative directions, and then to be left in a magnetic state midway between the two extremes. The procedure follows:
   1) With the primary winding of the CT open-circuited, connect the secondary section to a dc source and a fluxmeter or operational integrator, as shown in figure 22.
   2) Make certain there are no common conductors in the dc and fluxmeter circuits.
   3) Set the fluxmeter pointer at about the center of the scale and smoothly increase the direct current until the drop in the fluxmeter pointer speed indicates that the region of saturation has been reached.
   4) Observe the level of dc at this point and the corresponding fluxmeter indication, F1.
   5) Reverse the dc, maintaining the same level, and obtain another fluxmeter indication, F2.
   6) Now apply a trial value of dc in the opposite direction to demagnetize the core.
   7) Open the dc circuit and observe the fluxmeter indication.
   8) Repeat this operation until by successive trials the fluxmeter finally indicates the arithmetic mean of F1 and F2.

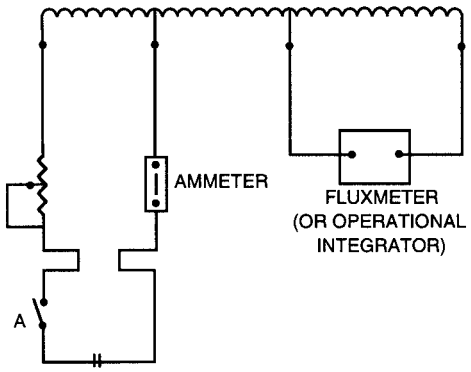

Figure 22 —Method 3: Circuit for demagnetizing current transformers

8.3 Impedance and excitation measurements

8.3.1 Impedance measurements

Impedance measurements discussed in 8.3.1.1 uses terminology typically used for power and distribution transformers. Impedance measurements discussed in 8.3.1.2 and 8.3.1.3 use terminology typically used for instrument transformers.

8.3.1.1 Impedance voltage

The voltage required to circulate the rated current of the transformer under short-circuit conditions is the impedance voltage of the transformer as viewed from the terminals of the excited winding.

The impedance voltage is comprised of an equivalent resistance component and a reactive component. It is not practical to measure these components separately, but after the loss and the impedance voltage are measured, the components may be separated by calculation.

It is sufficient to measure and adjust the current in the excited winding only, because the current in the short-circuited winding will be the correct value (except for a negligible excitation current) when the current in the excited winding is correct. The introduction of current-measuring equipment in series with the short-circuited winding may introduce large errors in the impedance measurements.

Copyright © 1994 IEEE All Rights Reserved

Copyright The Institute of Electrical and Electronics Engineers, Inc.
Provided by IHS under license with IEEE
No reproduction or networking permitted without license from IHS Not for Resale

For two-winding transformers, one of the windings (either the high-turn or the low-turn) is short-circuited, and voltage at rated frequency is applied to the other winding and adjusted to circulate rated current in the winding.

For transformers having more than two windings, the impedance voltage is a function of the test connections used. When making tests on multiple-winding transformers, the windings should be connected in such a manner as to provide the correct impedance data for the purpose intended.

Resistive and reactive components of the impedance voltage are determined by the use of the following equations:

$$V_r = P_z / I$$

$$V_x = \sqrt{V_z^2 - V_r^2}$$

where

V_r = voltage, in-phase component
V_x = voltage, quadrature component
V_z = impedance voltage
P_z = power in watts
I = current in amperes in excited winding

The I^2R losses of the two windings are calculated from the ohmic resistance measurements (corrected to the temperature at which the impedance test is made) and the currents that are used in the impedance measurement. These I^2R losses subtracted from the impedance loss give the stray losses of the transformer.

The temperature of the windings shall be taken immediately before and after the impedance measurements in a manner similar to that described in 8.5. The average shall be taken as the true temperature.

8.3.1.2 Current transformer short-circuit impedance measurements

The measured short-circuit impedance of a current transformer is the sum of the primary and secondary impedance. Since the secondary impedance cannot be determined from this information alone, the data obtained is of little value in the calculation of ratio and phase angle characteristics. However, it is of value in determining the burden imposed on main transformers by auxiliary transformers.

Except for current, the quantities measured in making impedance measurements on current transformers are extremely small and great care shall be exercised in order to obtain accurate results.

For the purpose of impedance measurements, current transformers can be divided into the following three types, according to their physical details.

a) *Type 1: Bushing-type, window-type, or bar-type, with turns well distributed about the core*. In current transformers of this type, the leakage reactance is extremely small and the impedance may be considered to be the resistance of the whole winding or that part to be used if it is well distributed. The manufacturer should be consulted if the winding distribution is not known.
b) *Type 2: Wound type in which the high-current (primary) terminals are at opposite ends of the transformer*. Transformers of this type should be excited from the high-current winding with the low-current winding short circuited, because a short circuit on the high-current winding will introduce appreciable error in the measurement due to the added impedance of the short-circuiting connections.
   It is recommended that the three-voltmeter method, as described in 8.3.1.3, be used for impedance measurement on this type of transformer.
c) *Type 3: Wound type in which the high-current (primary) leads are brought out parallel to each other through a single bushing.* Current transformers of this type may be excited from either the high-current or the low-current winding with the other winding short circuited.

Copyright © 1994 IEEE All Rights Reserved

Copyright The Institute of Electrical and Electronics Engineers, Inc.
Provided by IHS under license with IEEE
No reproduction or networking permitted without license from IHS Not for Resale

Either the three-voltmeter method or the wattmeter, voltmeter, ammeter method can be used for impedance measurements on transformers of this type, depending on which winding is excited.

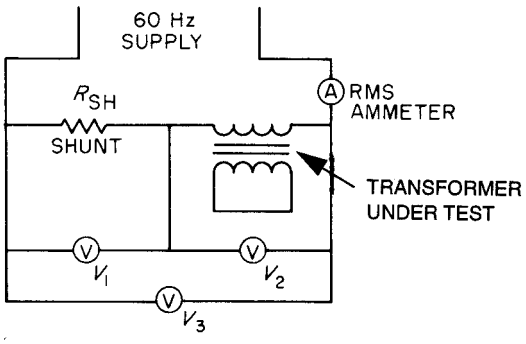

NOTE—V_1 and V_2 voltmeter impedance must be high compared to shunt and transformer.

Figure 23 —Circuit for measuring impedance: Three-voltmeter method

8.3.1.3 Voltage transformer short-circuit impedance measurements

Voltage transformers operate at high magnetic flux densities in normal service. Although short-circuit impedance measurements are necessarily made at low magnetic flux densities the components of impedance thus obtained are of value for the computation of transformer ratio and phase angle. The short-circuit characteristics are also of value in selection of fuses.

The short-circuit impedance can be measured by the three-voltmeter method or the wattmeter, voltmeter, ammeter method.

The circuit for the three-voltmeter method is shown in figure 23. From the measurements of V_1, V_2, and V_3 plus the known value of shunt resistance, R_{sh}, the equivalent resistance and reactance can be calculated from:

$$R_{eq} = 0.5R_{sh}[((V_3^2 - V_2^2)/V_2^2) - 1]$$

$$X_{eq} = \sqrt{[(V_2/V_1)^2 \times R_{sh}^2 - R_{eq}^2]}$$

where

R_{eq} = equivalent resistance
X_{eq} = equivalent reactance

The wattmeter, voltmeter, ammeter method is shown in figure 24. The measured values must be corrected for instrument tare.

Copyright © 1994 IEEE All Rights Reserved

Copyright The Institute of Electrical and Electronics Engineers, Inc.
Provided by IHS under license with IEEE
No reproduction or networking permitted without license from IHS Not for Resale

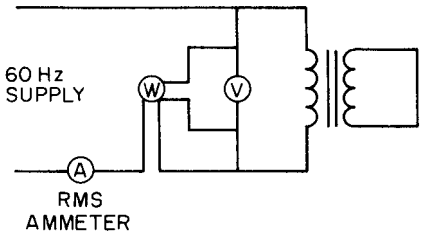

NOTE—It is recommended that the low-voltage winding be excited and the high-voltage winding be short-circuited.

Figure 24 —Circuit for measuring impedance: Wattmeter, voltmeter, ammeter method

8.3.2 Exciting current and excitation loss measurements

The circuit connection for the measurement of exciting current and loss is shown in figure 25. A series of simultaneous readings are taken on the ammeter, rms reading voltmeter, average reading voltmeter[13] calibrated in rms, and wattmeter.

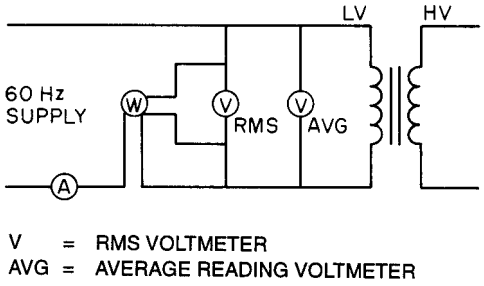

Figure 25 —Circuit for measuring excitation current and loss

With the same movement, an rms instrument deflects 1.111 times as far as an average reading instrument on the same sine wave.

The temperature error of an average reading voltmeter (especially instruments for less than 75 V) is likely to be greater than that of rms voltmeters. Therefore, the temperature characteristic of such an instrument should be known for reliable results.

Two excitation current curves can be drawn from the data obtained:

a) *Curve 1.* Average reading voltmeter versus the ammeter
b) *Curve 2.* rms voltmeter versus the ammeter

If these curves differ, the supply voltage is not a sine wave. In this case, curve 1 will be higher and curve 2 will be lower than the corresponding curve for sine wave voltage. If the two curves are within 2% of each other, either curve can be used without correction. If they differ by 2 to 10%, the average is used to determine the excitation current on a sine-wave basis. If they differ by more than 10%, very serious waveform distortion[14] is indicated and appropriate circuit changes must be made.

[13]This is a D'Arsonval movement in series with a full-wave rectifier.
[14]Very large waveform distortion can be detected more conveniently by oscilloscope or wave analyzer.

Copyright © 1994 IEEE All Rights Reserved

Copyright The Institute of Electrical and Electronics Engineers, Inc.
Provided by IHS under license with IEEE
No reproduction or networking permitted without license from IHS
Not for Resale

The excitation loss of a transformer includes the dielectric loss and core loss. It is measured by the wattmeter in figure 25.

The excitation loss determination is based on a sine wave voltage applied to the terminals of the transformer. Peaked voltage waves (form factor greater than 1.11), resulting generally from the nonlinear character of the excitation load of the transformer on the test source, give smaller excitation losses than a sine wave voltage. Flat-topped voltage waves, rarely encountered in such tests, give larger losses.

NOTE — Current transformer cores should be demagnetized just prior to excitation loss measurements and all measurements should be made on the low-current winding with other windings open-circuited.

WARNING This circuit may result in abnormally high voltages at the high-voltage terminals and abnormally low currents in the excitation circuit of certain voltage transformers.

8.3.3 Measurements for high magnetic flux densities

Measurements on voltage transformers and current transformers under overcurrent conditions are made using the average-reading voltmeter. The average value of the test voltage applied shall be the same as the average value of the desired sine wave of voltage at the proper frequency. Under this condition, the hysteresis component of the loss will be correct.

It is recommended that the test be made on the low-voltage winding with all other windings open circuited.

When the low-voltage winding is excited, full voltage will appear across the high-voltage winding and safety precautions must be taken.

Low-voltage windings must be grounded at a single point.

After the voltage is adjusted to the desired value as indicated by the average-reading voltmeter, the simultaneous values of rms voltage, power, and current are recorded. Then the tare on the wattmeter, representing the losses of the connected instruments, is read and subtracted from the earlier wattmeter reading to obtain the excitation loss of the transformer.

Exciting current measurements are obtained at the same time that loss measurements are made. In order to obtain the correct exciting current measurement, the tare on the ammeter, which represents the current taken by the voltage elements of the wattmeter and voltmeters, must be measured and subtracted vectorially from the previous current measurements. If the readings of voltage as indicated on the rms voltmeter and the average-reading voltmeter differ by more than 2%, the measurements must also be corrected for waveform (see IEEE Std 4-1978).

8.4 Polarity

The lead polarity of a transformer is a designation of the relative instantaneous directions of currents in its leads. Primary and secondary leads are said to have the same polarity when at a given instant the current enters the primary lead in question and leaves the secondary lead in question in the same direction as though the two leads formed a continuous circuit, (For more information on polarity, see clause 3.)

Three methods are in common use for determining the polarity of instrument transformers. They are the following:

a) Inductive kick with direct current, current, and voltage transformers
b) Comparison with a transformer of known polarity
c) The direct comparison of winding voltages

Copyright © 1994 IEEE All Rights Reserved

Copyright The Institute of Electrical and Electronics Engineers, Inc.
Provided by IHS under license with IEEE
No reproduction or networking permitted without license from IHS Not for Resale

8.4.1 Inductive kick with direct current, current, and voltage transformers

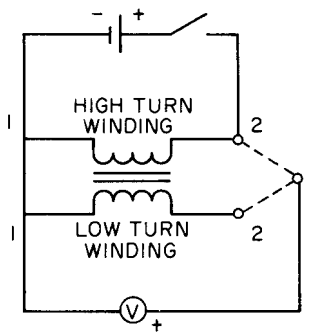

Figure 26 —Polarity by inductive kick

To determine the polarity of instrument transformers using this method, do the following:

a) Connect terminal 1 of the high-turn winding to terminal 1 of the low-turn winding. In most cases, the high-turn winding of a current transformer is the X1-X2 winding, and the high-turn winding of a voltage transformer is the H1-H2 winding.
b) Connect a dc voltmeter across the high-turn winding.
c) Connect a battery across the high-turn winding so that the voltmeter will read up scale.
d) Disconnect the voltmeter from terminal 2 of the high-turn winding and connect it to terminal 2 of the low-turn winding.
e) Break the battery circuit and observe the direction of kick on the voltmeter. If the voltmeter kicks down scale, terminal 1 of the high-turn winding and terminal 1 of the low-turn winding are of the same polarity.
f) Check the results by remaking and breaking the battery circuit. If both terminals 1 are of the same polarity, the voltmeter will kick up scale on make and down scale on break.

> **WARNING** It is preferable to apply the battery voltage to the high-turn winding in order to minimize high-inductive kicks that might injure personnel or damage equipment.

NOTE — All current transformers should be demagnetized to eliminate residual magnetism in the core, and must be demagnetized after the application of direct current. This is necessary because the level of magnetism may remain high enough to affect ratio and phase angle, and at severe overloads of fault conditions the ratio may be enough in error to affect relay schemes (see 8.2).

Copyright © 1994 IEEE All Rights Reserved

Copyright The Institute of Electrical and Electronics Engineers, Inc.
Provided by IHS under license with IEEE
No reproduction or networking permitted without license from IHS
Not for Resale

8.4.2 Comparison with a transformer of known polarity

8.4.2.1 Current transformers

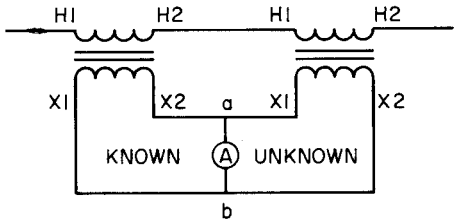

Figure 27 —Polarity by comparison with current transformer of known polarity

To determine the polarity of current transformers using this method, do the following:

a) Connect the transformers as shown in figure 27.
b) Energize the circuit from a controlled current source so that the test current flows in the H1-H2 windings as shown in figure 27.
c) If the ammeter reads the sum of the currents in the high-turn windings, the polarity of the unknown transformer is reversed. If the ammeter reads the difference of currents in the high-turn windings, the polarity of the unknown transformer is as marked.

8.4.2.2 Voltage transformers

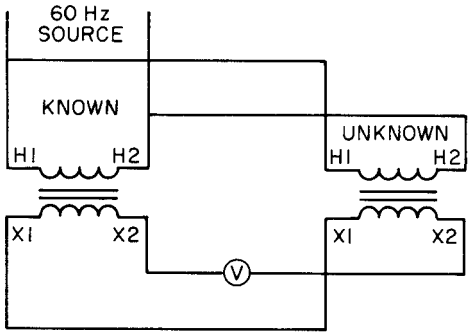

Figure 28 —Polarity by comparison with voltage transformer of same ratio and known polarity

To determine the polarity of voltage transformers using this method, do the following:

a) Connect the high-turn windings of the two transformers in parallel, as shown in figure 28, by connecting H1 of the known transformer to H1 of the unknown transformer and H2 of the known transformer to H2 of the unknown transformer.
b) Connect the low-turn windings through a voltmeter, as shown in figure 28, by connecting X1 of the known transformer to X1 of the unknown transformer and X2 of the known transformer to one voltmeter terminal and X2 of the unknown transformer to the other voltmeter terminal.
c) Energize the circuit at terminals H1–H2 from a controlled 60 Hz voltage source.

Copyright © 1994 IEEE All Rights Reserved

Copyright The Institute of Electrical and Electronics Engineers, Inc.
Provided by IHS under license with IEEE
No reproduction or networking permitted without license from IHS Not for Resale

d) If the voltmeter reads zero, the polarity of the unknown transformer is as marked. If the voltmeter reads the sum of the voltages of the low-turn windings, the polarity of the unknown transformer is reversed.

> **WARNING** High voltages will be present on the high-voltage terminals of both transformers.

8.4.3 Direct comparison of winding voltages

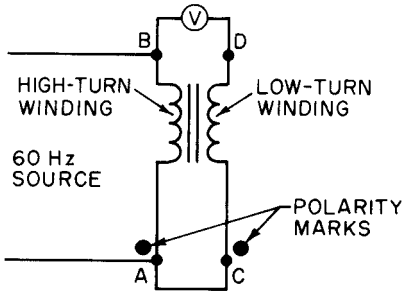

Figure 29 —Polarity by comparison of winding voltages

To determine the polarity of instrument transformers using this method, do the following:

a) Connect the high-turn and low-turn windings as shown in figure 29. In most cases, the high-turn winding of a current transformer is X1–X2 and that of a voltage transformer is H1–H2.
b) Energize the circuit from a controlled voltage source at the terminals AB of the high-turn winding.
c) Read the value of the voltages across AB and BD.
d) If the voltage across BD is less than the voltage across AB, the polarity is as marked. If the voltage across BD is greater than the voltage across AB, the polarity is reversed.

> **WARNING** The source voltage should always be impressed across the high-turn winding; otherwise, dangerously high voltages might be encountered.

NOTE — The suitability of this method for high-ratio transformers is limited by the sensitivity of the voltmeter used.

8.5 Resistance measurements

These measurements are made on instrument transformers for the following reasons:

a) To calculate relaying accuracy of type C or K current transformers
b) To establish the winding resistance at a known temperature for use in temperature rise tests
c) To calculate winding temperatures and temperature rises at the completion of temperature rise tests
d) To permit calculation of ratios under load conditions (for voltage transformers)

Windings other than the one whose resistance is being measured should be short-circuited. This is important both as a safety measure to prevent the induction of high voltages and to reduce the time required for the direct current to stabilize.

Copyright © 1994 IEEE All Rights Reserved

Copyright The Institute of Electrical and Electronics Engineers, Inc.
Provided by IHS under license with IEEE
No reproduction or networking permitted without license from IHS Not for Resale

A resistance can be measured either as a two-terminal network or as a four-terminal network. In a two-terminal measurement, the resistance network is connected to the measuring circuit through one pair of leads. Thus, both contact resistance at the points of connection and lead resistance become part of the resistance being measured and to the extent they are unknown, the two-terminal resistance is indefinite.

If, however, a resistance network is made four-terminal, its resistance can be defined precisely and measured by four-terminal techniques. One pair of terminals (current terminals) is located outside a second pair (potential terminals) as shown in figure 30.

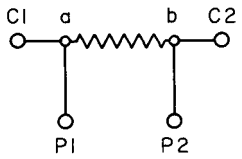

Current Terminals C1–C2
Potential Terminals P1–P2

Figure 30 —Four-terminal network for resistance measurement

The resistance is defined as the open-circuit voltage across the potential terminals divided by the current entering and leaving the current terminals. Thus, for example, if the resistance of a winding between two points a and b is needed, the potential leads are connected to terminals P1 and P2, and the current leads are connected to terminals C1 and C2.

There is no precise rule that governs the selection of a four-terminal measurement over a two-terminal one. The choice depends primarily on the magnitude of the resistance and on the accuracy to which it is to be measured. However, either contact resistance or uncertainties in lead resistance may be as much as 0.01 Ω. If these arc an appreciable part of the resistance to be measured, a four-terminal measurement is dictated.

Both two-terminal and four-terminal resistance measurements may be made using voltmeter-ammeter methods or bridge methods.

8.5.1 Voltmeter-ammeter methods

The potentiometric method to be employed is described in 5.3.2 of IEEE Std C57.12.90–1993.

8.5.2 Bridge methods

When two-terminal measurement is adequate, the Wheatstone bridge is recommended. When four-terminal measurements are necessary, the double-ratio arm (Kelvin) bridge is required. Both types are commercially available and require minimum external equipment.

The Wheatstone bridge consists of a pair of ratio arms, an adjustable resistance arm for achieving balance, and an arm containing the resistance to be measured. In the commercial versions, the ratio arms are equipped so that any one of several ratios can be readily selected. Thus, resistances can be measured over a wide range with maximum resolution available from the adjustable arm.

The double-ratio arm bridge is more complex in both its design and its operation. Textbooks in electrical measurements contain excellent discussions of the bridge and should be consulted. Generally speaking, the bridge measures a four-terminal resistance in such a way that its points of attachment to the measuring circuit and its lead resistances do not enter into the measurement.

Copyright © 1994 IEEE All Rights Reserved

Copyright The Institute of Electrical and Electronics Engineers, Inc.
Provided by IHS under license with IEEE
No reproduction or networking permitted without license from IHS Not for Resale

The lowest measurement uncertainty available from either type of bridge can be obtained if a substitution technique is employed. The technique, however, requires a known standard whose nominal value is the same as the resistance being measured. The bridge is first balanced with the standard in the unknown arm and is then rebalanced with the standard replaced by the unknown resistor. In this way, only the small difference between the two is measured and since the other arms of the bridge remain unchanged, their values need not be known.

8.5.3 Reference temperature measurements

The reference temperature of the winding may be determined accurately when measuring the winding resistance for use in temperature rise tests. The temperature of the winding shall not be assumed to be the same as the surrounding air.

For dry-type transformers, the winding resistance measurements shall be made at a time when the transformer and surrounding air arc at constant and substantially equal temperatures, and only after the transformer has been unexcited and had no current in its windings for a period of from three to eight hours, depending on the size of the transformer. They shall not be made when the transformer is located in drafts or in an area in which the temperature is fluctuating rapidly.

For dry-type, self-cooled transformers, the temperature of the windings shall be recorded as the average of the readings of several thermocouples or thermometers placed in contact with the external surface of the transformer as close as possible to the windings.

For liquid-immersed, self-cooled transformers, the temperature of the windings and liquid shall be assumed to be the same and shall be recorded as the average of the readings of several thermometers immersed in the liquid as close to the coils as practical or as the average of the readings of several thermocouples or thermometers placed in contact with the external surface of the transformer as close as possible to the windings.

8.6 Short-time characteristics

8.6.1 Short-time mechanical rating tests

The test to demonstrate the short-time mechanical current rating of a current transformer shall be made by subjecting the current transformer, with the secondary short-circuited, to at least one peak of a primary current having a crest value equal to 2.7 times the mechanical short-time current rating.

The test to demonstrate the mechanical short-circuit capability of a voltage transformer shall be made with rated voltage maintained on the primary for 1 s with the secondary terminals short-circuited.

8.6.2 Thermal short-time rating calculations

The calculation of temperature risc of a winding under short-time conditions is based on the assumption that heating is adiabatic, i.e., that all of the energy developed in the winding during the period of the short circuit (5 s or less) is stored as heat in the winding.

It is further assumed that the starting temperature of the winding when the short circuit occurs is the maximum hottest-spot temperature of the winding at 30 °C ambient temperature under continuous loading at a) the continuous thermal current rating for a current transformer or b) the maximum rated standard burden and 110% of rated voltage for a voltage transformer. Where this hottest-spot winding temperature is not established by test, the limits of hottest-spot temperature rise (specified in table 4) for 30 °C ambient shall be used.

The calculated maximum temperature attained by the winding during the short circuit shall not exceed the limits specified in 6.6.2 for a current transformer or in 7.7 for a voltage transformer.

Copyright © 1994 IEEE All Rights Reserved

Copyright The Institute of Electrical and Electronics Engineers, Inc.
Provided by IHS under license with IEEE
No reproduction or networking permitted without license from IHS Not for Resale

The general equation of winding temperature under short-circuit conditions is most conveniently expressed and used as the current density that will produce the maximum permissible temperature in the winding under the conditions specified above. Thus,

$$\frac{I}{A} = \sqrt{\frac{C\,(T+20)}{2\rho_{20}t}\log_e \frac{\left\langle \frac{T+\theta_m}{T+\theta_s} \right\rangle^2 + K}{1+K}}$$

where:

I = short-circuit current, in amperes
A = conductor cross-section in inches squared
C = average thermal capacitance per unit volume, in wattseconds/(degrees Celsius × inches cubed)
ρ_{20} = specific resistance at 20 °C in ohm-inches
t = duration of short circuit, in seconds
T = 234.5 °C for copper
= 225 °C for EC aluminum
θ_s = starting temperature, in degrees Celsius
θ_m = maximum temperature, in degrees Celsius
K = ratio of all stray conductor loss to the de I^2R loss of the winding at the starting temperature, θs
ln = natural logarithm

This general equation may be simplified for most practical applications, since short-time thermal ratings are based on a short-circuit duration of 1 s and, except for large current transformer primary bars, K is usually negligible.

For copper (100% IACS):

ρ_{20} = 0.679×10^{-6} Ω-in
C = 58.6 Ws/(°C × in^3)
T = 234.5 °C

and, for the above conditions,

$$\frac{I}{A} = 104,800 \sqrt{\log_e \left\langle \frac{234.5+\theta_m}{234.5+\theta_s} \right\rangle^2} \text{ A/in}^2$$

$$\frac{I}{A} = 16,240 \sqrt{\log_e \left\langle \frac{234.5+\theta_m}{234.5+\theta_s} \right\rangle^2} \text{ A/cm}^2$$

For aluminum (EC, 62% IACS):

ρ_{20} = 1.095×10^{-6} Ω-in
C = 43.1 Ws/(°C × in^3)
T = 225 °C

and, for the above conditions,

$$\frac{I}{A} = 69,440 \sqrt{\log_e \left\langle \frac{225+\theta_m}{225+\theta_s} \right\rangle^2} \text{ A/in}^2$$

$$\frac{I}{A} = 10,760 \sqrt{\log_e \left\langle \frac{225+\theta_m}{225+\theta_s} \right\rangle^2} \text{ A/cm}^2$$

Copyright © 1994 IEEE All Rights Reserved

Copyright The Institute of Electrical and Electronics Engineers, Inc.
Provided by IHS under license with IEEE
No reproduction or networking permitted without license from IHS Not for Resale

If θ_m is taken as 250 °C for copper and as 20 °C for EC aluminum (see 6.6.2), and if θ_s is taken as 95 °C for 55 °C rise types, 110 °C for 65 °C rise types, and 140 °C for 80 °C rise types (see table 4), then:

For copper:

I/A = 92 030 A/in^2 (or 14 260 A/cm^2) for 55 °C rise types
I/A = 86 550 A/in^2 (or 13 420 A/cm^2) for 65 °C rise types
I/A = 75 220 A/in^2 (or 11 660 A/cm^2) for 80 °C rise types

For aluminum:

I/A = 52 310 A/in^2 (or 8110 A/cm^2) for 55 °C rise types
I/A = 47 990 A/in^2 (or 7430 A/cm^2) for 65 °C rise types
I/A = 38 310 A/in^2 (or 5940 A/cm^2) for 80 °C rise types

8.6.3 Short-time thermal rating of current transformers

The short-time thermal rating assigned to a current transformer shall be such that the permissible current density, as determined by the applicable equation of 8.6.2, will not be exceeded in any winding.

For current transformers, the major portion of the stray conductor loss, if any, is normally in the primary and K, the ratio of stray conductor loss to I^2R loss, should be applied to the calculations of the temperature rise in the primary winding only. The value may be determined from the equation:

$$K = (P_z - I^2 \times R)/(I_p^2 \times R)$$

where

$I^2 \times R$ = total dc loss for primary and secondary windings
$I_p^2 \times \mathrm{R}$ = dc loss for primary winding only
P_z = watt measured in impedance test (see 8.3.1.1)

The value of K at the prescribed starting temperature may be determined from the stray loss ratio, K_a, at some other temperature θ_a by the following equations:

For copper:

$$K = K_a \times ((234.5 + \theta_a)/(234.5 + \theta_s))^2$$

For EC aluminum:

$$K = K_a \times ((225 + \theta_a)/(225 + \theta_s))^2$$

For the calculation of permissible current density in the secondary winding, K may be considered negligible and the simplified equations at the end of 8.6.2 may be used.

In a current transformer, under the conditions prescribed for the calculation of temperature rise, saturation of the core may cause the actual secondary current to be less than that indicated by the marked ratio of the transformer. Where actual secondary current under the overload condition has been established by test or calculation, the actual secondary current density may be used rather than that indicated by the marked ratio.

Copyright © 1994 IEEE All Rights Reserved

Copyright The Institute of Electrical and Electronics Engineers, Inc.
Provided by IHS under license with IEEE
No reproduction or networking permitted without license from IHS Not for Resale

8.6.4 Short-circuit thermal capability of voltage transformers

To demonstrate the ability of a voltage transformer to meet the temperature limitations of 7.7, the short-circuit current in each winding is calculated for the condition of rated voltage applied to the primary terminals, and the secondary winding short-circuited at its terminals. The current density, *I/A*, is then calculated by dividing the short-circuit current by the cross section of the conductor. The value of current density so obtained for each winding must not exceed the applicable value calculated using the equations at the end of 8.6.2, the stray conductor loss ratio *K* being considered negligible for voltage transformers.

For the purpose of calculating the short-circuit current of the above, the reactance *X*, and the resistance *R*, may be determined by any of the methods described in 8.3, but the resistance must be corrected to a termperature that is the average of the initial and maximum temperatures. For any winding:

$$I = V/\sqrt{(R^2 + X^2)}$$

where

I = short circuit current
V = rated voltage of the winding
X = reactance, referred to that winding
R = resistance, referred to that winding at the average temperature

The value of R may be determined from the resistance, R_a, at a temperature θ_a by one of the following relations.

For copper:

$$R = R_a \times (234.5 + (\theta_s + \theta_m)/2)/(234.5 + \theta_a)$$

For EC aluminum:

$$R = R_a \times (225 + (\theta_a + \theta_m)/2)/(225 + \theta_a)$$

In a voltage transformer under short-circuit conditions, the current, and therefore the current density, will decrease during the short circuit due to the change of resistance with the temperature of the winding. The value of short-circuit current, as determined by the above paragraph, therefore represents an average value during the short-circuit period. However, this approximation introduces negligible error in the calculation of temperature rise within the prescribed limits.

8.7 Temperature rise tests

8.7.1 General

All temperature rise tests shall be made under the normal conditions of the means, or method, of cooling.

All temperature rise tests shall be made with the transformer under test in the attitude and under the conditions for which it is designed to operate. If the transformer is designed for use in any one of several attitudes, or under several possible conditions, the test shall be made in the attitude and condition that is considered to result in the greatest temperature rise.

The transformer shall be mounted in a normal manner. *Mounted in a normal manner* shall be interpreted to mean that the heat dissipation due to conduction and radiation shall not be substantially influenced by abnormal heat transfer to,

Copyright © 1994 IEEE All Rights Reserved

Copyright The Institute of Electrical and Electronics Engineers, Inc.
Provided by IHS under license with IEEE
No reproduction or networking permitted without license from IHS Not for Resale

or from, surrounding objects. Transformers shall be completely assembled with normal finish, and if liquid-immersed, they shall be filled to the recommended level.

Temperature rise tests shall be made in an area as free from drafts as practicable.

8.7.2 Ambient or cooling air temperature

The ambient temperature shall be the temperature of the air surrounding the transformer under test.

The ambient temperature shall be not less than 10 °C nor more than 40 °C during a temperature rise test.

The preferred method of measuring the ambient temperature is by using an ideal identical transformer, or one having similar thermal-time characteristics, and measuring the temperature by the resistance method. The idle transformer shall be located so as to respond to ambient temperature changes in the same manner as the transformer under test (see 8.5.3).

When an identical transformer is not available, the temperature of the cooling air shall be determined from the average of the readings of several thermometers or thermocouples (one may be used for small transformers) placed around and approximately at the same level as the center of the maximum vertical heat-dissipating surface of the transformer, at a horizontal distance adequate to prevent the transformer under test from influencing the readings (1 to 2 m or 3 to 6 ft) is usually sufficient.

To reduce to a minimum the errors due to time lag between the temperature of the transformers and the variations in the ambient temperature, the thermocouples, or thermometers, shall be placed in suitable containers and shall have such proportions as will require not less than two hours for the indicated temperature within the container to change 6.3 °C if suddenly placed in air that has a temperature 10 °C higher, or lower, than the previous steady-state indicated temperature within the container.

When the ambient temperature, based on the average readings of the thermometers or thermocouples during one observation period, is not 30 °C, the winding losses will not be the same as the values that would have been obtained at 30 °C ambient conditions. If the temperature rise values obtained are close to the limiting values for the insulation used in the transformer, a correction shall be applied to that part of the temperature rise due to the winding losses.

The corrected temperature rise for current transformers shall be obtained by multiplying the total measured temperature rise by the applicable factor.

$$\text{Factor for copper windings} = 264.5/(234.5 + \theta_a)$$
$$\text{Factor for EC aluminum windings} = 255/(225 + \theta_a)$$

where

θ_a = ambient temperature at the termination of the temperature rise test

The temperature rise of voltage transformers depends on both the winding losses and the core losses. Only that part of the temperature rise due to the winding losses is affected by the ambient temperature, as the core losses are not appreciably changed over the temperature range in which instrument transformers normally operate.

The part of the temperature rise due to the winding losses shall be corrected by using the applicable factor covered above. To obtain the part of the temperature rise due to winding losses, a temperature rise test shall be made with the voltage transformer secondary winding open-circuited and the values obtained subtracted from the temperature rise values that were obtained under the corresponding condition specified by 8.7.9.

Copyright © 1994 IEEE All Rights Reserved

Copyright The Institute of Electrical and Electronics Engineers, Inc.
Provided by IHS under license with IEEE
No reproduction or networking permitted without license from IHS Not for Resale

8.7.3 Temperature rise measurements

Provision shall be made to measure the surface temperature of all metal parts surrounding, or adjacent to, the outlet leads or terminals carrying large currents.

When possible, the top liquid temperature of liquid-immersed transformers shall be measured by a thermocouple or spirit thermometer immersed to approximately 5 cm (2 in) below the top liquid surface.

The bulbs of the spirit thermometer or other temperature-reading means used for taking temperatures of the transformer surfaces in air shall be covered by small felt pads, or the equivalent, cemented to the transformer. If thermocouples are used, the leads shall be so arranged that excessive heat is not conducted to or from the junction.

The ultimate average temperature rise of the windings shall be determined by the resistance method whenever practical.

To avoid errors due to the time required for the bridge current to become constant, the time required shall be determined during the measurement of the winding resistance reference temperature. An equal or slightly longer time shall be allowed when making ultimate and cooling rate temperature measurements. Measurements of temperature rise by the resistance method shall not include contact resistances. This may be accomplished by using the double bridge method.

The temperature rise shall be considered constant when all temperatures that can be measured without shutdown at intervals of not less than 30 min show three consecutive readings within 1 °C. Temperature rise tests shall not be made by any method that requires shutting off the power for more than two minutes in any two hours to establish that a constant temperature has been reached.

8.7.4 Determination of winding temperature at time of shutdown

A correction shall be made for the cooling that occurs from the time that the power is shut off to the time that the hot resistance is measured.

The recommended method of determining the temperature of the winding at the time of shutdown shall be by measuring the resistance of the windings, as the transformer cools, immediately after shutdown and extrapolating to the time of shutdown. At least four measurements shall be made at intervals of not more than three minutes but no less than the time required for the measuring current to stabilize. If the current does not exceed 15% of the rated current of the winding, it may be maintained during the entire period.

8.7.5 Determination of average temperature by the resistance method

The average temperature of a winding shall be determined by either of the following equations:

$$\theta_t = (R_t/R_0) \times (T + \theta_0) - T$$

$$\theta_t = ((R_t - R_0)/R_0) \times (T + \theta_0) + \theta_0$$

where

T for copper =234.5
T for EC aluminum =225
θ_t = temperature in degrees Celsius corresponding to the resistance of the winding at time of shutdown
θ_0 = temperature in degrees Celsius corresponding to the reference resistance of the winding
R_t = resistance of the winding at time of shutdown
R_0 = reference resistance of the winding

Copyright © 1994 IEEE All Rights Reserved

Copyright The Institute of Electrical and Electronics Engineers, Inc.
Provided by IHS under license with IEEE
No reproduction or networking permitted without license from IHS Not for Resale

8.7.6 Determination of temperature rise from temperature measurements

The temperature rise is the corrected total temperature minus the ambient temperature at the time the observations were made.

8.7.7 Correction of observed temperature rise for variation in altitude

When tests are made at an altitude not exceeding 1000 m (3300 ft) above sea level, no altitude correction shall be applied to the temperature rise.

When tests are made at an altitude that is more than 1000 m (3300 ft) above sea level, the temperature rise shall he corrected to 30 °C conditions by the following method:

$$\theta_r = \theta_m \times [1 - 0.005^{*}((h - 1000)/100)]$$

or

$$\theta_r = \theta_m \times [1 - 0.005^{*}((A - 3300)/330)]$$

where

θ_r = temperature rise with standard conditions
θ_m = measured temperature rise corrected to 30 °C conditions
A = altitude in feet above sea level
h = altitude in meters above sea level

8.7.8 Current transformer temperature rise tests

Tests on current transformers shall be made at maximum rated continuous current and at rated frequency.

All terminals and joints shall be clean and tight and shall provide good electrical contact.

Current transformers that are rated for metering use only may be tested with the secondary winding shortcircuited.

Current transformers with a relay accuracy rating shall be tested with the maximum burden, in ohms, for which the transformer relay rating is published. The power factor of the burden is not important for this test.

Current transformers that have been magnetized by measuring the resistance of the winding shall be demagnetized after the completion of temperature rise tests. (The method of demagnetizing is covered in 8.2.)

In order that the bus bar or cable connected to the current transformer will not represent an unduly large heat sink or source, the bar or cable shall have a current-carrying capacity equivalent to the maximum continuous-current rating of the current transformer and shall extend a minimum of 125 cm (4 ft) beyond the ends of each primary terminal.

In making temperature tests on window-type current transformers the primary conductor used in the test shall have a continuous-current capacity in the configuration used and according to recognized authority, not less than the test current. If more than one primary turn is used, the clearance between the turns and the transformer body around the outside shall be at least 30 cm (12 in). For 55 °C or 65 °C rise type transformers the continuous-current capacity of the primary bus shall be based on a temperature rise of 50 °C or less, and the continuous-current capacity of the primary cable shall be based on a maximum conductor temperature of 75 °C.

Copyright © 1994 IEEE All Rights Reserved

Copyright The Institute of Electrical and Electronics Engineers, Inc.
Provided by IHS under license with IEEE
No reproduction or networking permitted without license from IHS Not for Resale

8.7.9 Voltage transformer temperature rise tests

Temperature rise tests shall be made at rated frequency. The power factor of the burden used during temperature rise tests is not important.

Temperature rise tests at thermal burden rating shall be made at rated primary voltage.

Temperature rise tests, for normal operating conditions, shall be made at 110% rated primary voltage and with the maximum standard burden for which an accuracy class is published.

8.8 Dielectric tests

Dielectric tests should be made with the transformer at room temperature and, unless otherwise specified, the voltage should be measured in accordance with IEEE Std 4-1978, with the following exception: for transformers to be tested at 50 kV or less, it is permissible to depend on the ratio of the supply transformer to indicate the proper test voltage, provided it has been suitably calibrated for the load conditions involved.

When tests are required on bushings or insulators separately from the transformers, the tests shall be made in accordance with IEEE Std 21-1976.

Current transformers listed in table 3 are to be tested in accordance with the applicable sections of IEEE Std C37.09-1979.

8.8.1 Factory dielectric tests

The purpose of dielectric tests in the factory is to check the insulation and workmanship and, when required, to demonstrate that the transformer has been designed to withstand the specified insulation tests.

Impulse tests, when required, shall precede the low-frequency tests.

8.8.2 Dielectric tests by the user

It is recognized that the dielectric tests impose a severe stress on the insulation, and if applied frequently, will hasten breakdown or may cause breakdown. The stress imposed, of course, is more severe the higher the value of the applied voltage. Hence the advisability of periodic testing may be questionable.

It is recommended that initial user tests of insulation should not be in excess of 75% of the factory test voltage; that for old apparatus rebuilt in the field, tests should not be in excess of 75% of the factory test voltage; and the periodic insulation tests by the user should not be in excess of 65% of the factory test voltage. Tests made by the user for design approval may be made at 100% of the factory test voltage.

Under some conditions transformers may be subjected to periodic insulation tests using dc voltage. In such cases, the test dc voltage should not exceed the original factory test rms alternating voltage. For example, if the factory test was 26 kV rms, then the routine test dc voltage should not exceed 26 kV.

Periodic dc insulation tests should not be applied to transformers of higher than 200 kV BIL rating.

8.8.3 Applied voltage tests

The terminal ends and taps brought out of the case from the winding under test shall all be joined together and connected to the line terminal of the testing transformer. All other terminals and parts (including tank and core, if accessible) should be connected to ground and to the other terminal of the testing transformer. The ground connection between the apparatus being tested and the testing transformer must be a substantial metallic circuit.

Copyright © 1994 IEEE All Rights Reserved

--`,`-`-`,,`,,`,`,,`---

Copyright The Institute of Electrical and Electronics Engineers, Inc.
Provided by IHS under license with IEEE
No reproduction or networking permitted without license from IHS Not for Resale

Wire of sufficient size and suitable arrangement to prevent excessive partial discharge (corona) at the test voltage should be used in connecting the respective taps, line terminals, and the test transformer together. Care must be taken to keep the wire on the high-voltage side well away from the ground. No appreciable impedance should be placed between the testing transformer and the one under test.

It is recommended that a suitable current-sensitive failure detection device be provided. The reason for this is that the voltage change across the test transformer at failure may not easily be detected by observation of the input voltmeter.

As a safety precaution, a relief gap set at a voltage 10% to 20% in excess of the specified test voltage should be connected during the applied voltage test. For instrument transformers to be tested at 50 kV or less, it is permissible to omit the relief gap (see 8.8).

The applied test voltage should be started at one-third or less of full value and increased gradually to full value in not more than 15 s. After being held for 1 min, it should be reduced gradually in not more than 15 s to one-third of the maximum value or less and the circuit opened.

Note that the applied voltage test requirements for insulated-neutral-terminal types of voltage transformers are specified in 4.5.

The test frequency shall be 60 Hz.

8.8.4 Induced voltage tests

These are made by applying voltage to one winding with all the other windings open. One end of each winding shall be grounded during this test. Usually the voltage is applied to the low-voltage winding. When the voltage across any winding will exceed 50 kV during this test, some means should be provided to verify the voltage.

As this test (if made at rated frequency) overexcites the transformer under test, the frequency of the applied voltage should be such as to prevent saturation of the core. Ordinarily this requirement necessitates the use of a frequency of 120 Hz or more when exciting 60 Hz units. For those types that have large distributed capacitance, the excitation current increases with the frequency of the applied voltage, making it necessary to guard against an exciting current that will exceed 200% normal load current based on the thermal rating. When frequencies higher than 120 Hz are used, the severity of the test is abnormally increased and for this reason the duration of the test should be reduced in accordance with table 16.

The voltage should be started at one-third or less of the full value and be increased gradually to full value in not more than 15 s. After being held for the duration of time specified in table 18, it should be reduced gradually in not more than 15 s to one-third the maximum value, or less, and the circuit opened.

Voltage transformers in polyphase metering equipment may be tested with single-phase voltage. Usually the specified test voltage is applied to one of the windings on each core with the neutral ends of the open windings grounded.

Table 16— Full voltage duration for induced voltage tests

Frequency (Hz)	Duration (s)
120 or less	60
180	40
240	30
360	20
400	18

Copyright © 1994 IEEE All Rights Reserved

Copyright The Institute of Electrical and Electronics Engineers, Inc.
Provided by IHS under license with IEEE
No reproduction or networking permitted without license from IHS Not for Resale

8.8.5 Impulse tests

These tests consist of applying in the following order one reduced full wave, two chopped waves, and one full wave. Impulse tests are to be made without excitation.

8.8.5.1 Wave to be used

The wave to be used shall consist of a nominal 1.2×50 μs wave. Either, but not both, positive or negative waves may be used. Waves of negative polarity for liquid-immersed apparatus, and of positive polarity for dry-type or compound-filled apparatus, are recommended and shall be used unless otherwise specified. If in testing liquid-immersed apparatus the atmospheric conditions at the time of test are such that bushings will not withstand the specified polarity wave, then a wave of the opposite polarity may be used.

The voltage shall be measured and the oscillogram scaled as specified in section 2. of IEEE Std 4-1978.

8.8.5.2 Reduced full-wave test

For this test, the voltage wave shall have a crest value of between 50 and 70% of the full-wave crest given in table 2.

8.8.5.3 Chopped-wave test

For this test, the applied voltage wave shall be chopped by a suitable air gap. It shall have a crest value and time to flashover in accordance with table 2.

To avoid recovery of insulation strength if failure has occurred during a previous impulse, the time interval between application of the last chopped wave and the final full wave should be minimized and preferably should not exceed 5 min.

8.8.5.4 Full-wave test

For this test, the voltage wave shall have a crest value in accordance with table 2 and no flashover of the bushing or test gap shall occur.

To avoid flashover of the bushing during adverse conditions of humidity and air density, the bushing flashover may be increased by appropriate means. The time interval between application of the last chopped wave and the final full wave shall be minimized to avoid recovery of insulation strength if a failure has occurred prior to the final full wave.

All impulses applied to a transformer shall be recorded if their crest values exceed 40% of the crest of the full-wave value given in table 2.

When reports require oscillograms, those of the first reduced full wave, the last two chopped waves, and the last full wave of voltage shall represent a record of the successful applications of the impulse test to the transformer.

8.8.5.5 Current transformer connections for impulse test

The impulse voltage shall be applied to all primary leads simultaneously with the secondary windings shortcircuited and grounded.

8.8.5.6 Voltage transformer connections for impulse test

The specified test voltage shall be applied to each primary terminal. In testing transformers equipped with fuses, the fuses should be short-circuited. Test voltages shall be applied to the polarity terminal of the high-voltage winding with the opposite lead grounded and to the nonpolarity terminal with the polarity lead grounded.

Copyright © 1994 IEEE All Rights Reserved

Copyright The Institute of Electrical and Electronics Engineers, Inc.
Provided by IHS under license with IEEE
No reproduction or networking permitted without license from IHS Not for Resale

One terminal of the winding under test shall be grounded directly or through a small resistance if current measurements are to be made. One terminal of each of the other windings may be grounded directly or through a resistor. It is desirable that the voltage on ungrounded terminals of a winding not under test should not exceed 80% of the full-wave voltage for its BIL rating.

In some cases the inductance of the winding is so low that the desired voltage magnitude and duration of the 50% point on the tail of the wave cannot be obtained with available equipment. Low-inductance windings may be tested by inserting a resistor of not more than 500 Ω in the grounded end of the winding. In all such cases shorter waves may be used.

8.8.5.7 Detection of failure during impulse test

Any unexplained differences between the reduced full wave and the final full wave detected by superimposing the two voltage osciilograms, or any such differences observed by comparing the chopped waves to each other and to the full wave up to the time of flashover, are indications of failure. Deviations may be caused by conditions in the test circuit external to the transformer or by protective devices and should be fully investigated.

Smoke bubbles rising through the liquid in the transformer are definite evidence of failure. Clear bubbles may or may not be evidence of trouble; they may be due to entrapped air. They should be investigated by repeating the test, or by reprocessing the transformer and repeating the test to determine whether a failure has occurred.

In making the chopped-wave test, failure of the chopping gap, or any external part, to flashover, although the voltage oscillograms show a chopped wave, is a definite indication of a flashover either within the transformer or in the test circuit.

Unusual noise within the transformer at the instant of applying the impulse is an indication of trouble.

When the ground current oscillogram method of detection is used, impulse current in the grounded end of the winding tested is measured by means of an osciliograph connected across a suitable shunt inserted between the normally grounded end of the winding and ground. Any unexplained differences between the current wave shapes obtained on reduced full waves and full-wave tests detected by superimposing the two current osciilograms may be an indication of failure. Deviations in the current wave shapes may also by caused by conditions in the test circuit external to the transformers, or by built-in protective devices, and should be investigated fully. It is difficult to shield the measuring circuit completely from the influence of the high voltage of the surge generator and some stray voltages are frequently picked up that may produce an erratic record for the first one or two microseconds. Such influences, if they occur at the start of the current wave, should be disregarded. The ground current method of detection is not applicable for use with chopped-wave tests.

When the induced-voltage osciliogram method of detection is used, the voltage induced in the secondary winding is measured by means of an oscillograph connected across the secondary winding of the transformer under test. Any unexplained difference between the voltage wave shapes obtained on reduced full waves, and full-wave tests detected by superimposing the two voltage oscillograms, may be an indication of failure. Deviations in the voltage wave shapes may also be caused by conditions in the test circuit external to the transformer or built-in protective devices and should be investigated fully. The induced-voltage method of detection is not applicable for use with chopped-wave tests.

8.9 Measurement of open-circuit voltage of current transformers

These are design tests to determine the open-circuit voltage.

The open-circuit voltage as measured will be considerably reduced from the true value if the impedance of the measuring circuit connected to the secondary terminals is not extremely high or if there is even minor variation from a pure sinusoidal wave of current. The measurement to detect and correct for these possible conditions should be made with a primary circuit as shown in figure 31 a), such that the ratio V_3/V_2 [see figure 31 b)] does not exceed 2.

Copyright © 1994 IEEE All Rights Reserved

Copyright The Institute of Electrical and Electronics Engineers, Inc.
Provided by IHS under license with IEEE
No reproduction or networking permitted without license from IHS Not for Resale

a) Measure the crest open-circuit secondary voltage, VI [see figure 31 a)], using a high-impedance crest reading voltmeter, oscilloscope, or calibrated gap. Increase the primary current gradually from zero to the maximum continuous-current rating or until the crest voltage reaches 3500 V, whichever occurs first. If 3500 V crest is not exceeded by this test, then the information in item b) should be followed.

b) When the crest voltage in item a) does not exceed 3500 V, the observed open-circuit crest voltage must be corrected for deviation of the primary current from sinusoidal wave shape.

NOTE — The values of V_2 and V_3 need not be calibrated in volts but the sensitivity of the oscilloscope used to measure their value must be the same for both measurements. In many instances V_3 may be obtained simultaneously with V_2 by approximating the crest of the fundamental under conditions of figure 31 b). I_p must be the same rms value when measuring both V_2 and V_3.

The correction using figure 31 a) is:

$$V_a = V_1 \times \sqrt{(V_3 / V_2)} \text{ when } (V_3 / V_2) \leq 2$$

where

V_a = true open-circuit crest voltage
V_1 = measured secondary crest voltage using a high-impedance indicator (Switch 1 open)
V_2 = measured instantaneous voltage from mutual inductance at the instance of crest induced voltage in current transformer [oscilloscope indication at minimum dip, Switch 1 open, see figure 31 b)]
V_3 = measured crest voltage from mutual inductance [Switch 1 closed, see figure 31 c)]
I_p = rms primary current at the maximum continuous thermal current rating

Copyright © 1994 IEEE All Rights Reserved

Copyright The Institute of Electrical and Electronics Engineers, Inc.
Provided by IHS under license with IEEE
No reproduction or networking permitted without license from IHS Not for Resale

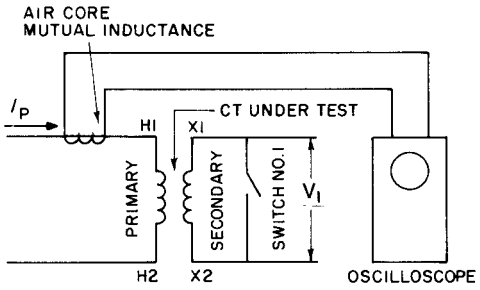

Figure 31a—Test circuit

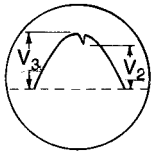

Figure 31b—Oscilloscope indication, switch no. 1 open

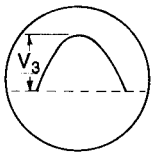

Figure 31c—Oscilloscope indication, switch no. 1 closed

Figure 31 —Measurement of open-circuit voltage of current transformers

9. Bibliography

The following is a list of the references used in the preparation of clause 8.

[B1] Arnold, A. H. M., “Current-Transformer Testing,” *Journal of the IEE*, vol. 74, pp. 424–444, 1934.

[B2] Arnold, A. H. M., “Precision Testing of Current Transformers,” *Journal of the IEE*, vol. 68, 930, pp. 898–905.

[B3] Bousman, H. W. and Ten Broeck, R. L., “A Capacitance Bridge for Determining the Ratio and Phase Angle of Potential Transformers,” *AIEE Transactions*, vol. 62, pp. 541–545, Aug. 1943.

[B4] Brownlee, A. L., “A Primary Method of Measuring the Ratio and Phase Angle of Current Transformers,” *AIEE Transactions*, vol. 69, part 1, pp. 459–460, 1950.

[B5] Buchanan, J. H., “Design, Construction, and Testing of Voltage Transformers,” *Journal of the IEE*, vol. 78, pp. 292–316, Mar. 1936.

[B6] Clothier, W. K. and Medina, L., “The Absolute Calibration of Voltage Transformers,” *Proceedings of the IEE*, vol. 104A, pp. 204–214, June 1957.

[B7] Glynne, A., “The Use of a Simple AC Potentiometer for the Precision Testing of Instrument Transformers,” *Journal of the IEE*, part 11, no. 21, pp. 177–181, June 1944.

Copyright © 1994 IEEE All Rights Reserved

Copyright The Institute of Electrical and Electronics Engineers, Inc.
Provided by IHS under license with IEEE
No reproduction or networking permitted without license from IHS
Not for Resale

[B8] Harris, F. K., *Electrical Measurements*. New York: John Wiley and Sons, Inc., 1952.

[B9] Harris, F. K., et al., "An International Comparison of Voltage-Transformer Calibrations to 350 kV," *IEEE Transactions on Communication and Electronics*, vol. 83, pp. 13–19, Jan. 964.

[B10] Kusters, N. L. and Moore, W. J. M., "The Compensated Current Comparator: A New Reference Standard for Current-Transformer Calibrations in Industry," *IEEE Transactions on Instrumentation and Measurement*, vol. IM-13, pp. 107–114, June/Sept. 1964.

[B11] Kusters, N. L. and Petersons, O., "A Transformer-Ratio-Arm Bridge for High-Voltage Capacitance Measurements," *IEEE Transactions on Communications and Electronics*, no. 69, pp. 606–611, Nov. 1963.

[B12] Kusters, N. L., "The Precise Measurement of Current Ratios," *IEEE Transactions on Instrumentation and Measurement*, vol. IM-13, pp. 197–209, Dec. 1964.

[B13] Miljanic, P. N., Kusters, N. L., and Moore, W. J. M., "The Application of Current Comparators to the Calibration of Current Transformers at Ratios up to 36 000/5 Amperes," *IEEE Transactions on Instrumentation and Measurement*, vol. IM-17, pp. 196–203, Sept. 1968.

[B14] Petersons, O. and Anderson, W. E., "A Wide-Range High-Voltage Capacitance Bridge with One ppm Accuracy," *IEEE Transactions on Instrumentation and Measurement*, vol. IM-24, no. 4, pp. 336–344, Dec. 1975.

[B15] Petersons, O., "A Self-Balancing Current Comparator," *IEEE Transactions on Instrumentation and Measurement*, vol. IM-15, nos. 1 and 2, pp. 62–71, Mar/June 1966.

[B16] Petersons, O., "A Self-Balancing High-Voltage Capacitance Bridge," *IEEE Transaction on Instrumentation and Measurement*, vol. IM-13, no. 4, pp. 216–224, Dec. 1964.

[B17] Silsbee, F. B., "A Shielded Resistor for Voltage Transformer Testing," *NBS Scientific Papers*, vol. 20, pp. 489–514, 1926.

[B18] Silsbee, F. B., Smith, R. L., Forman, N. L., and Park, J. H., "Equipment for Testing Current Transformers," *NBS Journal of Research*, vol. 11, pp. 93–122, July 1933.

[B19] Souders, T. M., "A Wide Range Current Comparator System for Calibrating Current Transformers," *IEEE Transactions on Power Apparatus and Systems*, vol. PAS-90, no. 1, pp. 318–323, Jan./Feb. 1971.

[B20] Sze, W.C., "Comparators for Voltage Transformer Calibrations at NBS," *NBS Journal of Research, part °C, Engineering and Instrumentation*, vol. 69C, no. 4, Oct./Dec. 1965.

[B21] Zinn, E., "Fundamentale Bestimmung der Fehler von Hochstspannungswandlern dutch ein Summierverfahren mittels Teilern aus Kapazitat und Widerstand," *Archiv fur Electrotechnik*, vol. 44, pp. 147–156, 1958–60.

9.1 Additional sources

The following constitute a sample of the large amount of useful material covering instrument transformers that is available. These references are given for the convenience of obtaining more detailed information and a historical perspective on the subject matter covered in this standard.

[B22] AIEE Committee on Protective Devices, Current Transformer Subcommittee, "Current- and Potential Transformer Standardization," *AIEE Transactions*, vol. 61, pp. 698–706, Sept. 1942.

[B23] Arnold, A. H. M., "Dielectric Admittances in Current Transformers," *Proceedings of the IEE*, vol. 97, part II, pp. 692–698, 1950.

Copyright © 1994 IEEE All Rights Reserved

Copyright The Institute of Electrical and Electronics Engineers, Inc.
Provided by IHS under license with IEEE
No reproduction or networking permitted without license from IHS Not for Resale

[B24] Arnold, A. H. M., "The Effect of Capacitance on the Design of Torodial Current Transformers," *Proceedings of the IEE*, vol. 97, part II, no. 60, pp. 797–808, Dec. 1950.

[B25] Arnold, A. H. M., "Leakage Phenomena in Ring-Type Current Transformers," *Journal of the IEE*, vol. 74, pp. 413–423, 1934.

[B26] Davis, R., "The Design and Construction of a Shielded Resistor for High Voltages," *Journal of the IEE*, vol. 79, pp. 1028–1034, 1931.

[B27] Dunfee, B. L. and Moore, W. J. M., "An International Comparison of Current-Ratio Standards at Audio Frequencies," *IEEE Transactions on Instrumentation and Measurement*, vol. IM-14, pp. 172–177, Dec. 1965.

[B28] Foley, A. H., "A Direct Reading High-Voltage Capacitance Bridge," *AIEE Transactions*, vol. 69, part II, pp. 692–698, 1950.

[B29] Hague, B., *Instrument Transformers — Their Theory, Characteristics and Testing*. London: Sir Isaac Pitman and Sons, Inc., 1936.

[B30] Kusters, N. L. and Moore, W. J. M., "The Development and Performance of Current Comparators for Audio Frequencies," *IEEE Transactions on Instrumentation and Measurement*, vol. IM-14, pp. 178–198, Dec. 1965.

[B31] McGregor, M. C., et al., "New Apparatus at the National Bureau of Standards for Absolute Capacitance Measurement," *IRE Transactions on Instrumentation*, vol. I-7, nos. 3 and 4, pp. 253–261, Dec. 1958.

[B32] Miljanic, R N.,"Capacitive Error in Current Comparators," *IEEE Transactions on Instrumentation and Measurement*, vol. IM-13, pp. 210–216, Dec. 1964.

[B33] Moreton, S. D.,"A Simple Method for the Determination of Busing-Current-Transformer Characteristics," *AIEE Transactions*, vol. 62, pp. 581–585, Sept. 1943.

[B34] Park, J. H.,"Accuracy of High-Range Current Transformers," *NBS Journal of Research*, vol. 14, pp. 367–392, 1935.

[B35] Pfuntner, R. A.,"The Accuracy of Current Transformers Adjacent to High-Current Buses," *AIEE Transactions*, vol. 70, part II, pp. 1656–1662, 1951.

[B36] Settles, J. L., Farber, W. R., and Conner, E. E.,"The Analytical and Graphical Determination of Complete Potential Transformer Characteristics," *AIEE Transactions*, part III, pp. 1213–1219, 1960.

[B37] Silsbee, F. B.,"A Study of the Inductance of Four Terminal Resistance Standards," *United States Bureau of Standards Scientific Papers*, no. 281, pp. 375–422, 1916.

[B38] Silsbee, F. B.,"Notes on the Design of Four Terminal Resistance Standard for Alternating Currents," *NBS Journal of Research*, vol. 4, 00 73–107, Jan. 1930.

[B39] Silsbee, F. B.,"Precautions Against Stray Magnetic Fields in Measurements with Large Alternating Currents," *AIEE Transactions*, vol. 48, pp. 1301–1306, Oct. 1929.

[B40] Weller, C. T.,"A 132 kV Shielded Potentiometer for Determining the Accuracy of Potential Transformers," *AIEE Transactions*, vol. 48, pp. 790–807, July 1929.

[B41] Woods, C. A., Jr. and BOTTONARI, S.A.,"Overcurrent Performance of Bushing-Type Current Transformers," *AIEE Transactions*, vol. 59, pp. 554–560, Sept. 1940.

Copyright © 1994 IEEE All Rights Reserved

--`,,`,,`-`-`,,`,,`,`,,`---

Copyright The Institute of Electrical and Electronics Engineers, Inc.
Provided by IHS under license with IEEE
No reproduction or networking permitted without license from IHS Not for Resale