An American National Standard

IEEE Guide for the Grounding of Instrument Transformer Secondary Circuits and Cases

Sponsor
Power System Relaying Committee
of the
IEEE Power Engineering Society

Secretariat

Institute of Electrical and Electronics Engineers
NoneNational Electrical Manufacturers Association

Approved 22 September 1983
Reaffirmed 6 December 1990

IEEE Standards Board

Approved 23 January 1987
Reaffirmed 21 May 1991

American National Standards Institute

© Copyright 1988 by

The Institute of Electrical and Electronics Engineers, Inc

345 East 47th Street, New York, NY 10017, USA

No part of this publication may be reproduced in any form, in an electronic retrieval system or otherwise, without the prior written permission of the publisher.

Copyright The Institute of Electrical and Electronics Engineers, Inc.
Provided by IHS under license with IEEE
No reproduction or networking permitted without license from IHS

Not for Resale

IEEE Standards documents are developed within the Technical Committees of the IEEE Societies and the Standards Coordinating Committees of the IEEE Standards Board. Members of the committees serve voluntarily and without compensation. They are not necessarily members of the Institute. The standards developed within IEEE represent a consensus of the broad expertise on the subject within the Institute as well as those activities outside of IEEE which have expressed an interest in participating in the development of the standard.

Use of an IEEE Standard is wholly voluntary. The existence of an IEEE Standard does not imply that there are no other ways to produce, test, measure, purchase, market, or provide other goods and services related to the scope of the IEEE Standard. Furthermore, the viewpoint expressed at the time a standard is approved and issued is subject to change brought about through developments in the state of the art and comments received from users of the standard. Every IEEE Standard is subjected to review at least once every five years for revision or reaffirmation. When a document is more than five years old, and has not been reaffirmed, it is reasonable to conclude that its contents, although still of some value, do not wholly reflect the present state of the art. Users are cautioned to check to determine that they have the latest edition of any IEEE Standard.

Comments for revision of IEEE Standards are welcome from any interested party, regardless of membership affiliation with IEEE. Suggestions for changes in documents should be in the form of a proposed change of text, together with appropriate supporting comments.

Interpretations: Occasionally questions may arise regarding the meaning of portions of standards as they relate to specific applications. When the need for interpretations is brought to the attention of IEEE, the Institute will initiate action to prepare appropriate responses. Since IEEE Standards represent a consensus of all concerned interests, it is important to ensure that any interpretation has also received the concurrence of a balance of interests. For this reason IEEE and the members of its technical committees are not able to provide an instant response to interpretation requests except in those cases where the matter has previously received formal consideration.

Comments on standards and requests for interpretations should be addressed to:

Secretary, IEEE Standards Board
345 East 47th Street
New York, NY 10017
USA

IEEE Standards documents are adopted by the Institute of Electrical and Electronics Engineers without regard to whether their adoption may involve patents on articles, materials, or processes. Such adoption does not assume any liability to any patent owner, nor does it assume any obligation whatever to parties adopting the standards documents.

Copyright The Institute of Electrical and Electronics Engineers, Inc.
Provided by IHS under license with IEEE
No reproduction or networking permitted without license from IHS
Not for Resale

Foreword

(This Foreword is not a part of ANSI/IEEE C57.13.3-1983, IEEE Guide for the Grounding Instrument Transformer Secondary Circuits and Cases.)

The Guide for the Grounding of Instrument Transformer Secondary Circuits and Cases was originally published in March, 1951, as AIEE Application Guide No. 52. This original guide went out of print in 1976. The proposed new guide, ANSI/IEEE C57.13.3-1983, is intended to replace the original AIEE No. 52 and to update its content to include present practices. The primary emphasis of the new guide is personnel safety.

A number of diagrams have been included in the new guide to help illustrate recommended practices. The recommendations of the current National Electrical Code and the practices of various public utilities and manufacturers were taken into consideration. Hence, this guide recognizes the more commonly accepted practices and incorporates them into a general set of rules, with permissible exceptions.

This guide was prepared by the Grounding of Instrument Transformer Secondary Circuits and Cases Working Group of the Relaying Practices Subcommittee of the Power System Relaying Committee of the IEEE Power Engineering Society.

At the time it approved this guide, the C57 Committee had the following membership:

Roger Ensign, *Chair*
L.S. McCormick, *Vice Chair*
C. H. White, *Secretary*

Electric Light & Power ..... W. Cole *(Delegation Chair)*
G. Gunnels
P. Orehek
D. Soffrin *(Alt)*
J. Sullivan *(Alt)*
A. Velazquez

Institute of Electrical and Electronics Engineers ..... J. Bonucchi
O. Compton *(Delegation Chair)*
J. Dutton
R. Ensign
F. Huber, Jr. *(Alt)*
L. McCormick
W. Neiswander
H. Smith *(Alt)*
B. Stanleigh
H. Tucker

National Electrical Manufacturers Association ..... P. Cacalloro *(Alt)*
P. Dewever *(Alt)*
J. Douglas
W. Kendall
K. Linsley *(Delegation Chair)*
G. Mayall
W. McNutt
J. Nay *(Alt)*
T. Reback
D. Strang *(Alt)*
R. Uptegraff, Jr.

Copyright The Institute of Electrical and Electronics Engineers, Inc.
Provided by IHS under license with IEEE
No reproduction or networking permitted without license from IHS
Not for Resale

Testing Laboratory Group ..... W. O'Grady
R. Seelbach
Tennessee Valley Authority ..... L. Smith
US Department of the Navy ..... H. Stickley
US Department of Energy ..... D. Torgerson
US Department of the Interior ..... F. Cook, Sr.
US D.A. REA ..... J. Arnold, Jr.
American National Standards Institute ..... C. Zegers

The members of the Grounding of Instrument Transformer Secondary Circuits and Cases Working Group responsible for developing this guide were:

B. L. Laird, *Chair*

C. W. Barnett
J. L. Blackburn
W. C. Kotheimer
J. R. Linders
D. R. Volzka
J. W. Walton
J. A. Zulaski

The members of the Relaying Practices Subcommittee who reviewed and approved this guide were:

A. T. Giuliante, *Chair*
L. E. Landoll, *Vice Chair/Secretary*

C. W. Barnett
E. A. Baumgartner
J. Berdy
J. R. Boyle
D. M. Clark
D. H. Colwell
J. F. Criss
H. DiSante
M. J. Fein
C. W. Fromen
R. W. Haas
S. H. Horowitz
T. L. Kaschalk
D. K. Kaushal
W. A. Lewis
J. Miller
T. Neissink
S. L. Nilsson
G. C. Parr
R. W. Pashley
L. Scharf
B. D. Russell
J. R. Tudor
J. R. Turley
F. Von Roeschlaub
C. L. Wagner
J. E. Waldron
M. A. Xavier

The following persons were on the balloting committee that approved this document for submission to the IEEE Standards Board:

W. A. Elmore, *Chair*
D.R. Volzka, *Vice Chair*
C. H. Griffin, *Secretary*

R. F. Arehart
J. J. Arneth
C. W. Barnett
E. A. Baumgartner
J. Berdy
J. L. Blackburn
J. B. Blose
J. J. Bonk
J. R. Boyle
B. Bozoki
W. D. Breingan
J. A. Bright
H. J. Calhoun
J. W. Chadwick, Jr.
D. M. Clark
G. A. Colgrove
D. H. Colwell
D. Dalasta
R. W. Dempsey
H. DiSante
E. J. Emmerling
R. J. Felton
R. J. Fernandez
C. M. Gadsden
A. T. Giuliante
S. E. Grier
R. W. Haas
R. E. Hart
M. D. Hill
R. W. Hirtler
S. H. Horowitz
F. B. Hunt
J. A. Imhof
R. H. Jones
T. L. Kaschalk
D. K. Kaushal
J. L. Koepfinger
W. C. Kotheimer
R. J. Kuhr

Copyright The Institute of Electrical and Electronics Engineers, Inc.
Provided by IHS under license with IEEE
No reproduction or networking permitted without license from IHS
Not for Resale

B. L. Laird
L. E. Landoll
J. R. Latham
H. Lee
W. A. Lewis
J. R. Linders
W. R. Lund
G. J. Marieni
C. A. Matthews
F. N. Meissner
J. Miller
R. J. Moran
J. J. Murphy
T. J. Murray
G. R. Nail
T. Niessink
G. C. Parr
R. W. Pashley
C. J. Pencinger
A. G. Phadke
A. C. Pierce
J. W. Pope
G. D. Rockefeller
B. D. Russell
M. S. Sachdev
E. T. Sage
L. Scharf
J. E. Stephens
A. Sweetana
E. F. Troy
J. R. Turley
E. A. Udren
W. H. VanZee
C. L. Wagner
J. E. Waldron
L. N. Walker
J. W. Walton
J. A. Zulaski

When the IEEE Standards Board approved this standard on September 22, 1983, it had the following membership:

James H. Beall, *Chair*
Edward Chelotti, *Vice Chair*
Sava I. Sherr, *Secretary*

J. J. Archambault
John T. Boettger
J. V. Bonucchi
Rene Castenschiold
Edward J. Cohen
Len S. Corey†
Donald C. Fleckenstein
Jay Forster
Donald N. Heirman
Irvin N. Howell
Joseph L. Koepfinger*
Irving Kolodny
George Konomos
R. F. Lawrence
John E. May
Donald T. Michael*
John P. Riganati
Frank L. Rose
Robert W. Seelbach
Jay A. Stewart
Clifford O. Swanson
Robert E. Weiler
W. B. Wilkens
Charles J. Wylie

*Member emeritus

†Deceased

Copyright The Institute of Electrical and Electronics Engineers, Inc.
Provided by IHS under license with IEEE
No reproduction or networking permitted without license from IHS
Not for Resale

CLAUSE PAGE

1. Introduction 1

1.1 General 1
1.2 Scope 1
1.3 References 2

2. Grounding of Instrument Transformer Secondary Circuits 2

2.1 Introduction 2
2.2 Ground Connection to Only One Point in the Secondary Circuit 2
2.3 Recommended Point of Grounding 3
2.4 Location and Making of Connection to Ground 3
2.5 Minimum Size of Conductor for Ground Connection or Neutral Bus 4
2.6 Ground Connection Isolation Test Facilities 4

3. Grounding of Instrument Transformer Cases and Cases of Connected Equipment 17

3.1 Metallic or Conductive Case Grounding 17
3.2 Internal Conductive Parts — Insulated Cases 17
3.3 Ungrounded Metallic or Conductive Cases 17

4. Exceptions to Grounding 17

5. Bibliography 18

Copyright The Institute of Electrical and Electronics Engineers, Inc.
Provided by IHS under license with IEEE
No reproduction or networking permitted without license from IHS
Not for Resale

An American National Standard

IEEE Guide for the Grounding of Instrument Transformer Secondary Circuits and Cases

1. Introduction

1.1 General

The primary emphasis of this guide is personnel safety and proper performance of relays at powerline frequencies. The grounding and shielding of cables and other grounding considerations are not addressed. However, references dealing with these and related subjects are included in the Bibliography.

Historically, it has been common practice in the US to connect some part of the secondary circuit of voltage and current transformers to the station ground system. The present preferred practice is to locate this safety ground with suitable ground isolation test facilities at the first point of application (switchboard or relay panel) of the instrument transformer secondary circuit. The circuit ground isolation facilities will permit convenient testing of circuit insulation to ground.

Previous publications have made significant contributions to consistency in some areas of grounding practices. This guide will include those contributions that are generally practiced today, make revisions where present experience and practice indicate them to be desirable, and make recommendations in new areas of interest not previously addressed. Diagrams are included to illustrate the recommendations.

1.2 Scope

This guide contains general and specific recommendations for grounding current and voltage transformer secondary circuits and cases of connected equipment. The practices recommended apply to all transformers of this type, including capacitive voltage transformers and linear couplers, irrespective of primary voltage or whether the primary windings are connected to, or are in, power circuits or are connected in the secondary circuits of other transformers as auxiliary cts or vts. Although most diagrams included in this guide show relaying applications, the recommended practices apply equally to metering and other areas where instrument transformers are used.

Exceptions to grounding are permissible or sometimes required where advantages obtained by not grounding, in certain instances or in certain types of installations, are considered to outweigh the safety or other advantages obtained by grounding. Such exceptions should comply with the recommendations of ANSI C1-1987 [1][1], even though utilities are presently exempt from the requirements of this code.

[1]The number in square brackets corresponds to that of the reference listed in 1.3 of this standard; bracketed numbers preceded by B correspond to Section 5, Bibliography.

--`,-`-`,,`,,`,`,,`---
Copyright The Institute of Electrical and Electronics Engineers, Inc.
Provided by IHS under license with IEEE
No reproduction or networking permitted without license from IHS
Not for Resale

1.3 References

When this American National Standard is superseded by a revision, the revision shall apply.

[1] ANSI C1-1987, National Electrical Code.[2]

2. Grounding of Instrument Transformer Secondary Circuits

2.1 Introduction

Each secondary circuit should be a completely self-contained metallic circuit insulated from ground, except at one point in the circuit. At this physical location in the installation, the circuit should be solidly grounded through a conductor of adequate size. (See Section 4 for permissible exceptions and 2.5 for conductor size.)

For purposes of this guide, an instrument transformer secondary circuit consists of all instrument transformer secondary windings and all of the coils, contacts, and other components that are connected together in a metallic circuit to the instrument transformer secondary.

2.2 Ground Connection to Only One Point in the Secondary Circuit

The instrument transformer secondary circuit, irrespective of the number of instrument transformer secondary windings connected to or in that circuit, should be connected to the station ground at only one point. Usually, the common return circuit for two or more transformers in a set are made into a secondary common neutral. This neutral should then be connected to the station ground bus at only one point, so that the station ground bus itself will never serve to complete any part of the instrument transformer secondary circuit.

The reasons for making this ground connection only at a single point in each circuit are as follows:

1) To prevent differences of potential in the instrument transformer secondary circuit because of differences of potential between different points in the station ground grid. These differences are caused by the flow of fault current through the ground grid. Such differences of potential can result in the flow of current through the relay, instrument, and meter coils and cause possible incorrect performance of the relay and inaccuracies in the readings of the instruments and meters. High neutral conductor currents resulting from multiple ground connections to the neutral can cause thermal damage to the neutral conductor.
2) To facilitate the temporary removal and reestablishment of the ground connection, when desired, in order to make periodic tests for deterioration of insulation and accidental grounds in the instrument transformer secondary circuit.

For convenience, some users make a common neutral connection for the individual neutrals or wye points of two or more sets of transformers into a neutral bus and then connect this neutral bus to the station ground bus at only one point. It is not recommended that neutrals or wye points of two or more sets of transformers be connected into a common neutral bus because of the difficulty caused when it is desired to make insulation tests from one set of transformer secondary circuits to ground. Removing the one known or intentional ground to test the one secondary circuit will remove the necessary safety ground for the other secondary circuits that may still be energized. Recommended arrangements for circuit grounding are discussed in 2.6.

[2]This document is published by the National Fire Protection Association, Batterymarch Park, Quincy, MA 02269. Copies are also available from the Sales Department, American National Standards Institute, 1430 Broadway, New York, NY 10018.

Copyright © 1983 IEEE All Rights Reserved

--`,,`-`-`,,`,,`,`,,`---

Copyright The Institute of Electrical and Electronics Engineers, Inc.
Provided by IHS under license with IEEE
No reproduction or networking permitted without license from IHS Not for Resale

2.3 Recommended Point of Grounding

The point of grounding in the instrument transformer secondary circuit should be located electrically at one end of the secondary winding of each instrument transformer and physically at the first point of application (switchboard or relay panel) of the instrument transformer secondary circuit. This practice will provide the maximum protection for personnel and connected equipment at the switchboard, which is the point where they are most apt to be exposed to circuit overvoltages. However, it is permissible to ground at some other point in the secondary circuit if the arrangement of the secondary windings or devices in the circuit makes this necessary in order to obtain correct equipment performance, or if the advantages of the desired performance are considered to outweigh the advantages of the direct grounding of the secondary windings. For these instances, it is satisfactory to ground those secondary windings not directly connected to ground, through the coils of relays or instruments and meters or other elements that form part of the secondary circuit, or through the secondary windings of other solidly grounded transformers, or both.

Following are specific examples of the preferred practice:

1) One end of the instrument transformer secondary winding in a circuit supplied by a single transformer should be connected to a single ground.
2) The common point of connection of the secondary windings of all instrument transformers in a circuit supplied by two or more transformers should be connected to a single ground. This recommendation applies where two or more instrument transformers, or sets of instrument transformer secondary windings are used in any combination having a common secondary return circuit, including the following:
   a) parallel or cross-connected transformer secondaries
   b) three single-phase transformers wye-connected to form a 3-phase connection
   c) two series or open-wye or open-delta connected instrument transformer secondaries
3) The secondary circuit of three or more voltage or current transformers connected in delta, or in some other manner, so that no common point of connection is available for all of the transformer secondaries, should have the common point between the greatest number of the secondary windings connected to ground.
4) When the secondary windings of two or more sets of current transformers are interconnected but cannot have a common neutral connection, then the common secondary neutral connection for the greatest number of these transformers should be the point of connection to ground. A specific case occurs where some of the interconnected current transformers have delta-connected secondary windings for supplying differential protective relays.

2.4 Location and Making of Connection to Ground

Instrument transformer secondary circuits have been connected to ground at the instrument transformer location and at the secondary burden location (and sometimes at both locations). Connection of the instrument transformer secondary circuit to ground at or near the instrument transformer location limits the voltage stresses primarily to the instrument transformer secondary windings. However, secondary burden devices at the switchboard, which may be several hundred or even several thousand feet from the instrument transformer location, could be subjected to significant overvoltages during power system short circuits to ground. Also, test and operating personnel are more apt to be working at the switchboard than at the transformer location. Consequently, it is common practice to locate the instrument transformer secondary circuit ground at the first switchboard contacted as stated in Section 1. This provides the maximum practical protection to personnel and secondary circuit connected equipment. This location also conveniently facilitates the testing requirements of 2.2 (2).

For unused instrument transformer secondary windings, the connection to the station ground bus may be made at the transformer location or at the switchboard, if the secondary circuit of the unused winding has been extended to the switchboard. Methods 1 and 2 in Fig 1.A illustrate the treatment of unused voltage transformer secondaries. Figure 8 illustrates unused current transformer winding grounding. The one connection to ground at the switchboard, rather than at the transformer, prevents a second ground from being added at the switchboard by someone not knowing that one already existed at the transformer. However, grounding the unused winding at the switchboard creates a much greater probability that noise will be coupled from the unused winding to the used winding during ground faults on the

Copyright © 1983 IEEE All Rights Reserved

Copyright The Institute of Electrical and Electronics Engineers, Inc.
Provided by IHS under license with IEEE
No reproduction or networking permitted without license from IHS Not for Resale

system. If noise coupling is a problem, connection of the unused winding to the used winding neutral at the transformer location as shown by Method 2 in Fig 1.A is recommended.

Where it is permissible to install the ground at the transformer location (such as for an unused winding, etc), the connection to ground may be made from the instrument transformer secondary circuit directly to the ground bus or to the grounded metal structure, whichever is more convenient. If the connection to ground is made through the metal structure, the paint or other nonconductive coatings, or both, should be removed or penetrated at all points of connection to ensure the making of good electrical contact with the metal.

The connection to ground should be made in an accessible location to facilitate its temporary removal and reconnection for test purposes. It should not be made through fuses or through the contacts of any testing or switching device that can be inadvertently opened or left open. Sliding link terminal blocks are considered inappropriate by some users for this reason.

2.5 Minimum Size of Conductor for Ground Connection or Neutral Bus

The grounding conductor and secondary neutral bus, or both, should be conductors as large or larger than the secondary phase conductors. If made of copper, they should never be smaller than No. 12 AWG wire, for mechanical reasons. If made of other metal, they should have equal conductance, strength and current carrying capacity.

If the coil of a device forms part of the circuit to ground for an instrument transformer secondary winding as described in 2.2, any size of wire of sufficient mechanical strength for use in the device itself, because of its protected location in the device, is also satisfactory for the purpose. However, all conductors external to the device itself, which ground this circuit, should in every case conform to the requirements in the preceding paragraph.

2.6 Ground Connection Isolation Test Facilities

The instrument transformer secondary circuit connection to ground should be made in such a way as to permit convenient removal for isolation or testing as stated in 2.2 (2). Removal of a connection to ground on one circuit should not interfere with maintaining a ground on any other circuit. Because of the different configurations used for the varied instrument transformer secondary circuits, it is not always readily apparent how to accomplish this. The following discussion and examples will illustrate typical methods of providing the isolation test facility for various voltage and current transformer secondary circuits.

Copyright © 1983 IEEE All Rights Reserved

Copyright The Institute of Electrical and Electronics Engineers, Inc.
Provided by IHS under license with IEEE
No reproduction or networking permitted without license from IHS Not for Resale

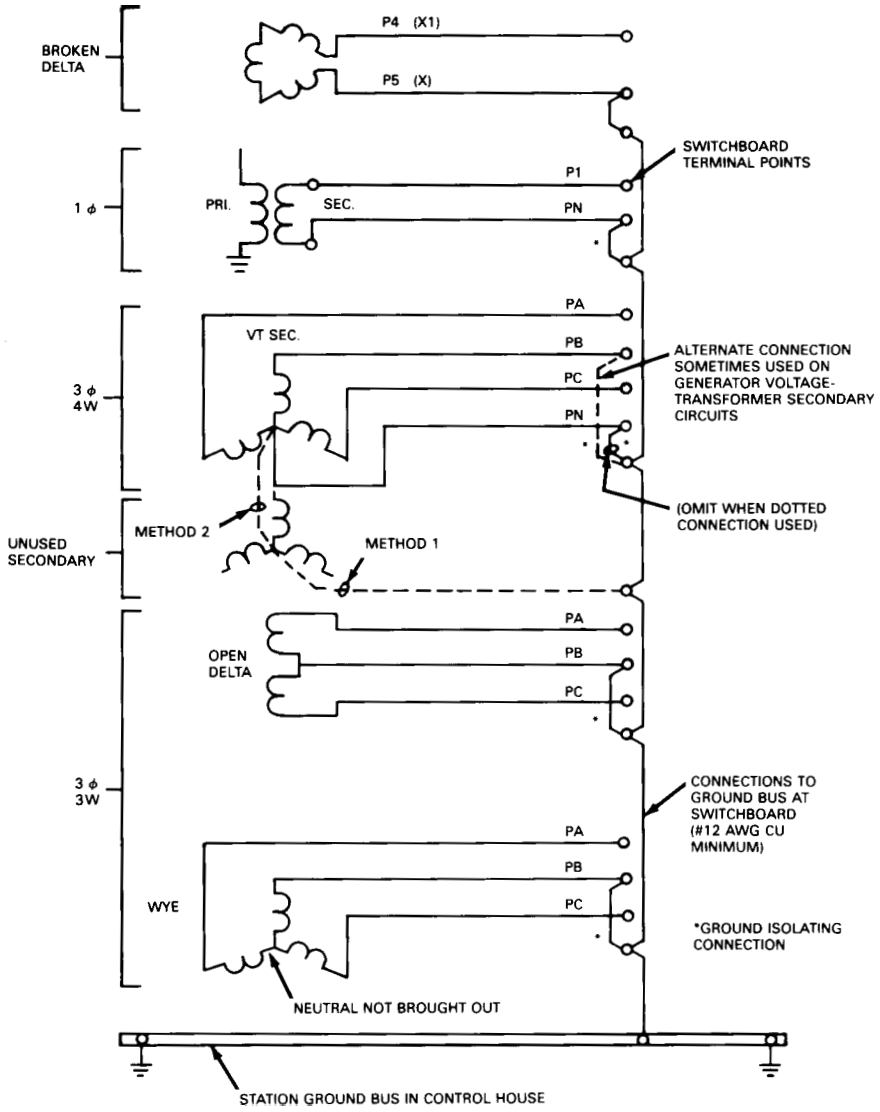

Figure 1.A— Recommended Method for Grounding Voltage Transformer Secondary Circuits

2.6.1 Voltage Transformer Secondary Circuits

2.6.1.1 Typical Metering and Relaying Applications

Figure 1.A includes the more common types of voltage transformer circuits used for metering and relaying. The neutral is normally grounded on 3-phase 4-wire circuits as shown. An exception is sometimes found with wye-wye connected voltage transformers on generator leads. The voltage transformer secondary neutral may be provided for connection to phase-to-neutral loads with the ground being on a phase (usually B). This reduces the possible occurrence of voltage transformer secondary phase-to-neutral faults that would appear to be phase-to-ground faults on the generator leads. Phases A or C to ground short circuits would be reflected through the voltage transformer as a phase-to-phase fault on the generator leads. Since phase-to-neutral short circuits can occur between phase B and neutral, or neutral to ground, or by short circuit of any phase-to-neutral loads, coordination between primary protective devices and voltage transformer secondary protective devices should be considered.

Copyright © 1983 IEEE All Rights Reserved

Copyright The Institute of Electrical and Electronics Engineers, Inc.
Provided by IHS under license with IEEE
No reproduction or networking permitted without license from IHS
Not for Resale

The three-phase, three-wire circuit is in common use today for voltage transformer circuits in metal clad switchgear. It has also been used frequently in the generator and auxiliary bus voltage transformer circuits in power plants. It is common practice to ground one of the phases, usually B phase. Figure 1.A shows the present preferred method of providing this ground for both the open delta and the wye connection with the neutral not brought out. (This latter arrangement is used when it is desirable to eliminate coordination problems between primary protective devices and voltage transformer secondary protective devices for phase-to-neutral short circuits or phase-to-ground insulation failures.)

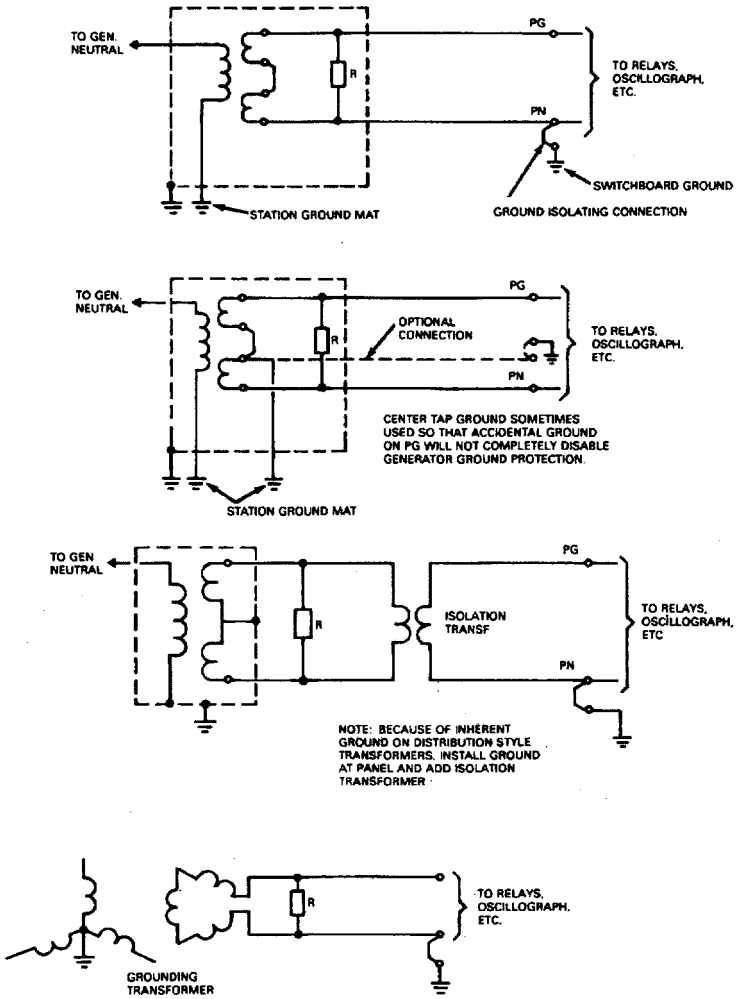

Figure 1.B—Typical Grounding Methods for Some Power Transformer Secondary Circuits When Used Also for Relaying and Instrumentation

Where power transformers are used to also provide voltage for metering or relaying applications, or both, additional hazards are created due to the power output capabilities or the construction of these transformers not providing ground isolation between primary and secondary windings. Although these transformers are not instrument transformers, their application for metering and relaying is commonplace. Figures 1.B and 7 illustrate preferred methods of handling the grounding of these devices' secondary windings and cases, including the use of separate isolation transformers where primary and secondary grounds cannot be separated. This situation is often encountered with generator neutral grounding transformers and grounding banks used to provide system grounding on otherwise ungrounded systems. The reader should refer to ANSI/IEEE C62.92-1987 [B5] .

Copyright © 1983 IEEE All Rights Reserved

Copyright The Institute of Electrical and Electronics Engineers, Inc.
Provided by IHS under license with IEEE
No reproduction or networking permitted without license from IHS
Not for Resale

2.6.1.2 Synchronizing Circuits

Voltage transformer secondary circuits used for synchronizing are sometimes more difficult to arrange to meet the requirement of removal of a ground on one circuit not interfering with the grounds on other circuits because many circuits converge at the synchronizing scope. Several examples are given to illustrate the problem and to suggest solutions.

Figure 2 shows a typical scope circuit without synchronizing lights. As shown, the scope is used for only two circuits. Note that both voltage transformer secondaries are grounded and not switched by the 25SS switch, but this is satisfactory because of the isolation between the neutrals provided by the internal construction of the scope.

Figure 3 shows expansion of the circuit to include multiple incoming circuits. Note the 25SS switch contact in the incoming circuits' neutrals. Since only one 25SS switch is operated at a time, the incoming circuit neutrals are isolated from each other and multiple grounds are not caused by the scope circuit. The running circuit neutral does not need to be switched with this arrangement. If the same scope is used for more than one running circuit, then additional contacts on the 25SS switch are required to switch the running circuit neutrals as shown in Fig 4. An alternative to using 25SS switch contacts to switch the running and incoming neutrals is the use of isolation transformers as shown in Fig 5. These isolation transformers are usually rated 115-115 volt, 600 volt class, and sufficient volt-ampere capacity for the scope (and synchronizing lights, if used).

Synchronizing lights, Fig 6, provide a reliable indication of the phasing between the two voltages. The lights check the performance of the scope and indicate when the difference frequency is too great for scope rotation.

Note that the addition of the lights requires that the running and incoming neutrals be connected together (jumper on scope) resulting in two grounds on the neutral circuits. Device 25 contacts in the neutrals eliminate the influence of multiple grounds on other voltage circuits' burdens except during the relatively brief periods when synchronizing is being done. Normally, this should be satisfactory. If, however, normal ground potential differences are such to cause errors in the scope and synchronizing light indications, then isolation transformers can be used as shown in Fig 5.

2.6.1.3 Station Service Power Used for Voltage Circuits

Some installations, especially distribution substations, use the station service transformer as one phase of a three-phase instrument voltage source. The station service neutral should be grounded at the switchboard and probably will also be grounded at the transformer. The neutral for the two voltage transformers will be grounded only at the switchboard (see Fig 7). To minimize the effect of multiple grounds on the phase 2 (station service) transformer, 2 1/2 element metering and instrumentation is connected to phase 1 and 3. The indicating voltmeter will, of course, be affected by any difference in ground potential when phase 2 line-to-neutral voltage is monitored. This is normally of no consequence.

2.6.2 Current Transformer Secondary Circuits

2.6.2.1 Unused Current Transformers

Current transformers that are unused should have the full winding shorted at the ct location and should be grounded. Note that Fig 8 does not show an isolating ground jumper. An isolating jumper is not necessary for testing purposes if the ct is not used.

2.6.2.2 Single Phase

Single phase currents are utilized by relays (for example, transformer neutral currents and ground sensors), transformer temperature indicators, and the like. In each of these cases, the circuit should be grounded as shown in Fig 9.

Copyright © 1983 IEEE All Rights Reserved

Copyright The Institute of Electrical and Electronics Engineers, Inc.
Provided by IHS under license with IEEE
No reproduction or networking permitted without license from IHS Not for Resale

2.6.2.3 Three Phases

The majority of all three-phase instrument and relay current circuits are wye-connected. The exception is delta cts that are used with transformer differential relays. Figure 10.A shows the preferred method of grounding three-phase wye-connected cts. Where the secondaries of two cts are connected in series for increased burden capability, the safety ground is connected as shown in Fig 10.B. Figures 11 and 12 show the preferred method of grounding three-phase delta and wye-connected cts in a typical transformer differential relay current circuit. Figures 13 and 14 illustrate the preferred grounding methods for bus differential current- or voltage-type relays and for bus differential percentage-differential current relays, respectively. Preferred ct grounding for ring-bus or breaker-and-a-half arrangements is shown in Fig 15.

2.6.2.4 Multiple Use of Current Transformers

Some special applications may require that one set of cts be used for two relay circuits such as with a double-breakered line. As in other current circuits, only one ground should be used for each complete metallic neutral. Figure 16 shows one arrangement for the interconnections of cts serving both bus differential and the line relaying. Note that use of isolating auxiliary cts forms three separate complete metallic neutrals requiring three grounds, as shown.

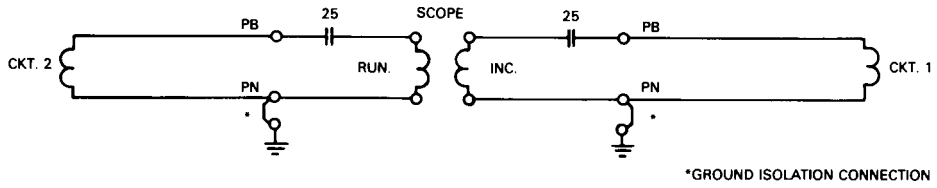

Figure 2—Recommended Method for Grounding Typical Two-Circuit Scope

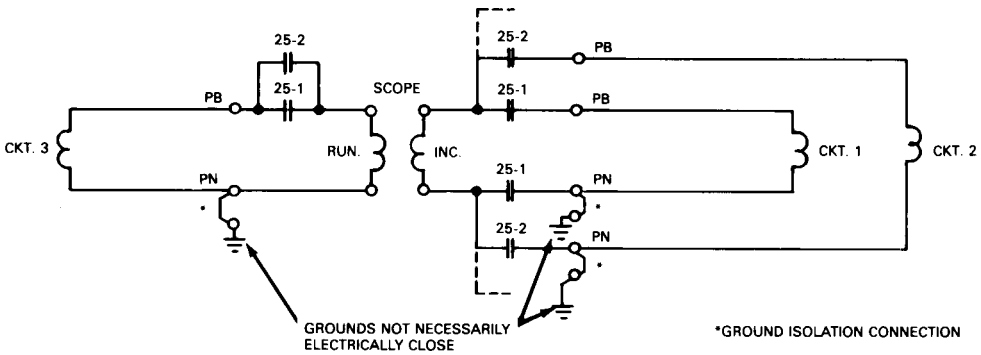

Figure 3—Recommended Method for Grounding Typical Scope Circuit with Multiple Incoming Circuits

Copyright © 1983 IEEE All Rights Reserved

Copyright The Institute of Electrical and Electronics Engineers, Inc.
Provided by IHS under license with IEEE
No reproduction or networking permitted without license from IHS
Not for Resale

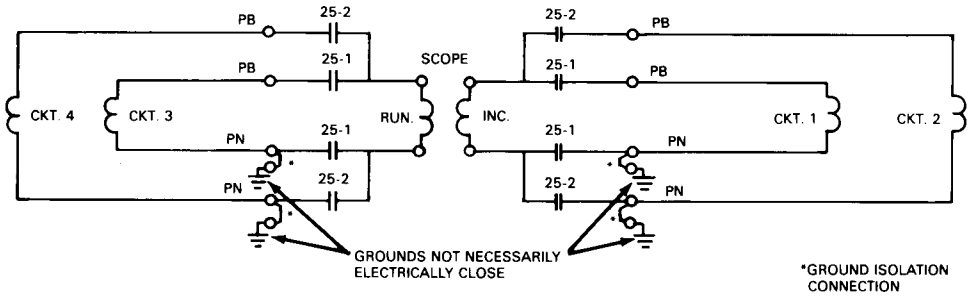

Figure 4—Recommended Method for Grounding Typical Scope Circuit With Multiple Incoming and Running Circuits

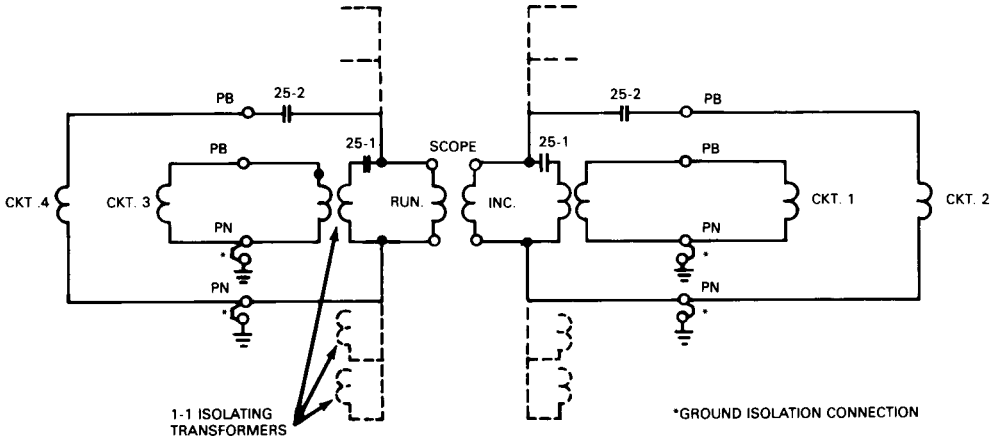

Figure 5—Recommended Method for Grounding Typical Scope Circuit With Multiple Incoming and Running Circuits, Using Isolating Transformers to Prevent Multiple Grounds on PT Neutrals

Copyright © 1983 IEEE All Rights Reserved

Copyright The Institute of Electrical and Electronics Engineers, Inc.
Provided by IHS under license with IEEE
No reproduction or networking permitted without license from IHS
Not for Resale

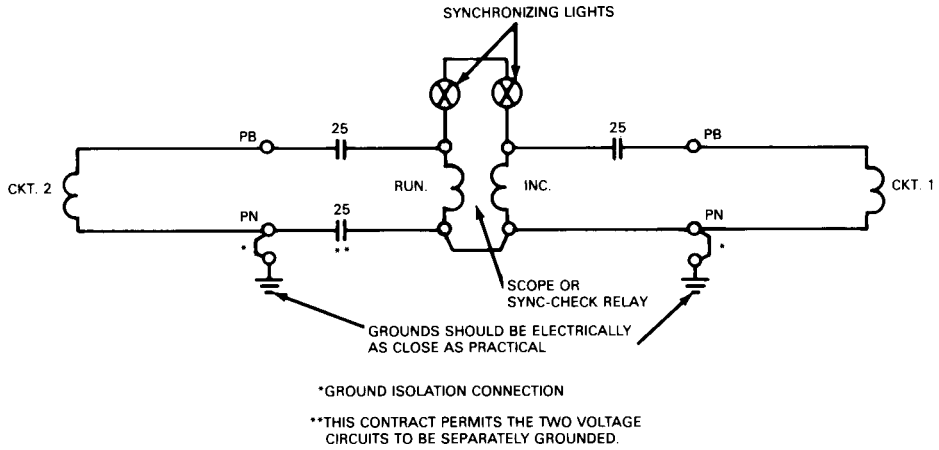

Figure 6—Recommended Arrangement of Neutral Circuit Grounds on Scope Circuit with Synchronizing Lights

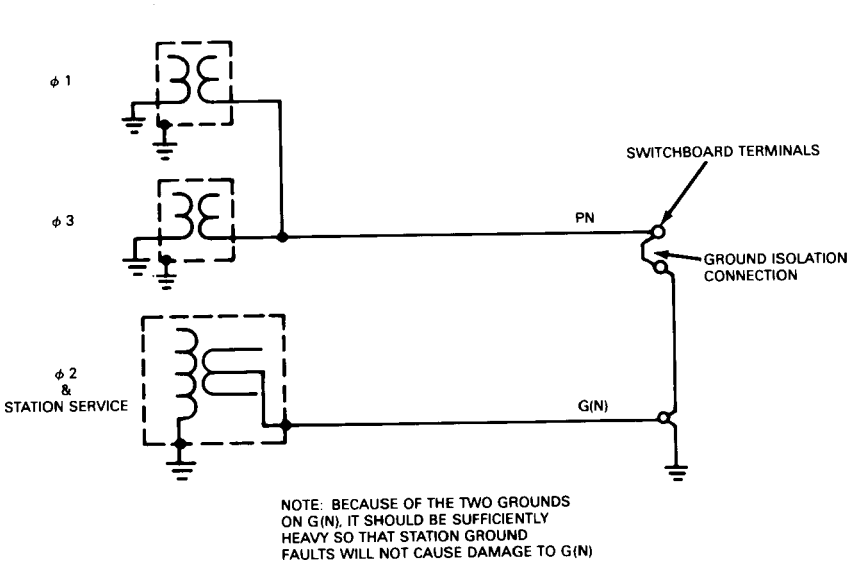

Figure 7—Method for Grounding VT and Station Service Neutrals (as Discussed in 2.6.1.3)

Copyright © 1983 IEEE All Rights Reserved

Copyright The Institute of Electrical and Electronics Engineers, Inc.
Provided by IHS under license with IEEE
No reproduction or networking permitted without license from IHS
Not for Resale

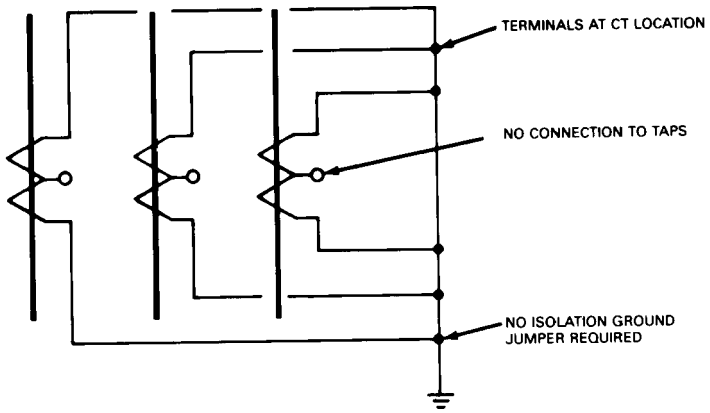

Figure 8—Grounding of Unused CT's

Copyright © 1983 IEEE All Rights Reserved

Copyright The Institute of Electrical and Electronics Engineers, Inc.
Provided by IHS under license with IEEE
No reproduction or networking permitted without license from IHS
Not for Resale

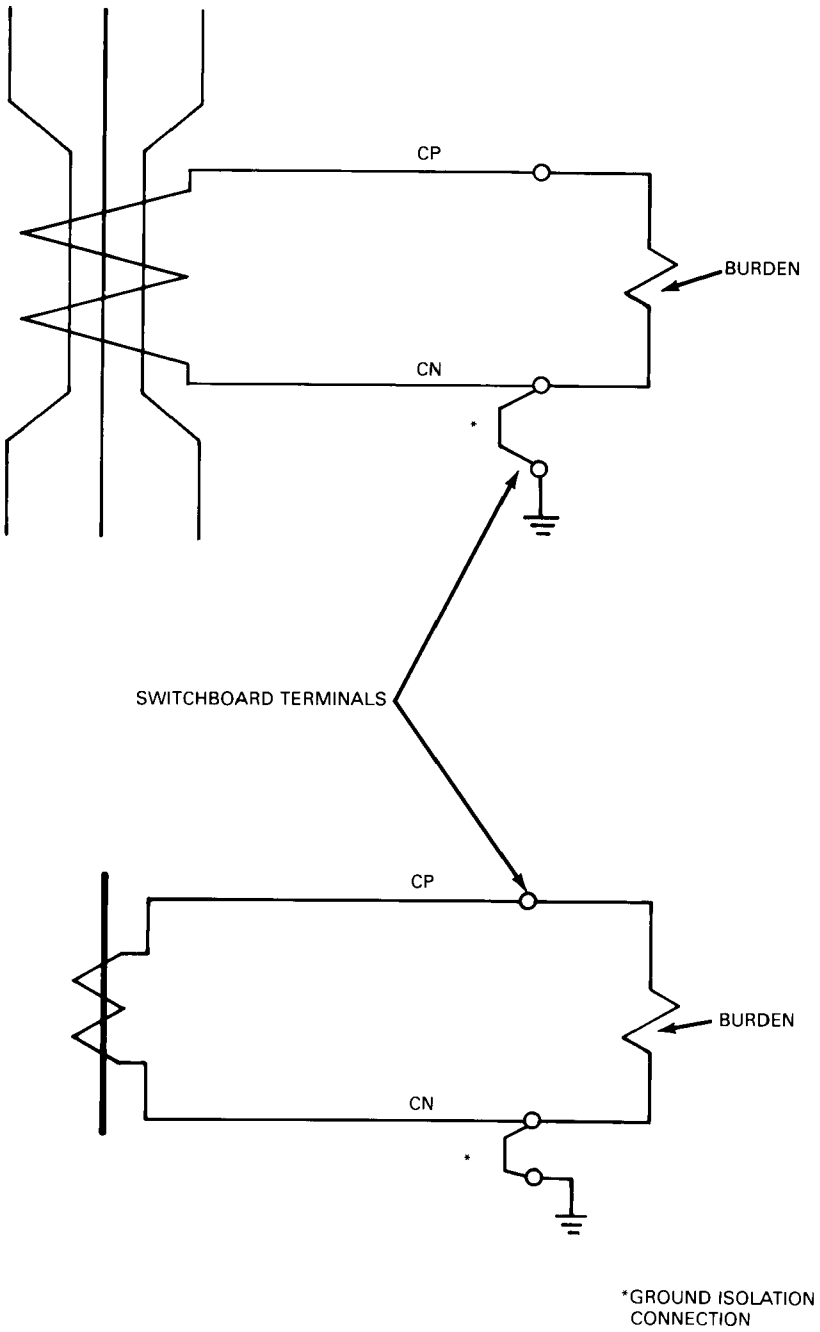

Figure 9—Recommended Method for Grounding Single-Phase Current Circuits

Copyright © 1983 IEEE All Rights Reserved

Copyright The Institute of Electrical and Electronics Engineers, Inc.
Provided by IHS under license with IEEE
No reproduction or networking permitted without license from IHS Not for Resale

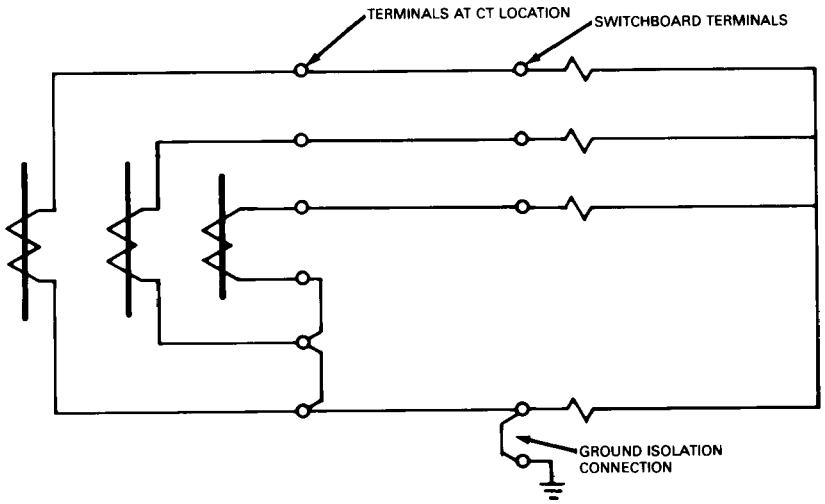

Figure 10.A— Recommended Method for Grounding Three-Phase Wye-Connected Current Circuits

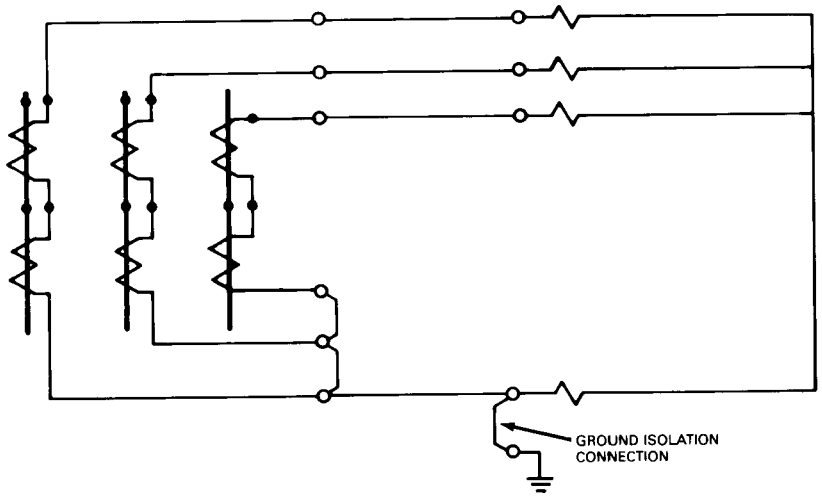

Figure 10.B—Recommended Method for Grounding Three-Phase Series-Connected Wye Current Circuits

Copyright © 1983 IEEE All Rights Reserved

Copyright The Institute of Electrical and Electronics Engineers, Inc.
Provided by IHS under license with IEEE
No reproduction or networking permitted without license from IHS Not for Resale

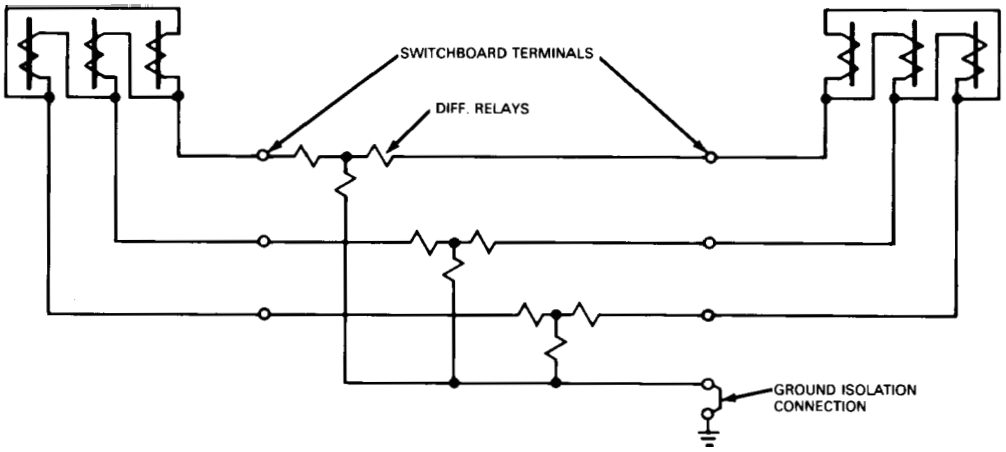

Figure 11—Recommended Method for Grounding Three-Phase Delta-Connected CT's in a Typical Transformer Differential Current Circuit

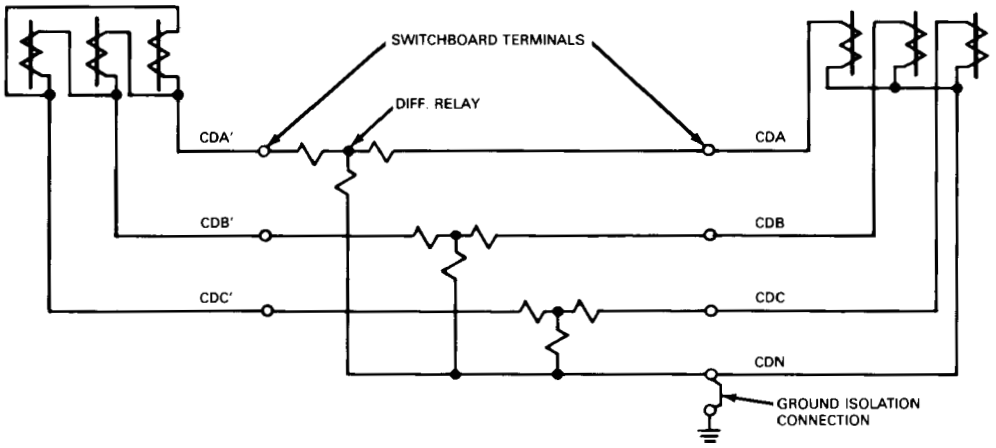

Figure 12—Recommended Method for Grounding Three-Phase Wye and Delta CT's in a Typical Transformer Differential Current Circuit

Copyright © 1983 IEEE All Rights Reserved

Copyright The Institute of Electrical and Electronics Engineers, Inc.
Provided by IHS under license with IEEE
No reproduction or networking permitted without license from IHS
Not for Resale

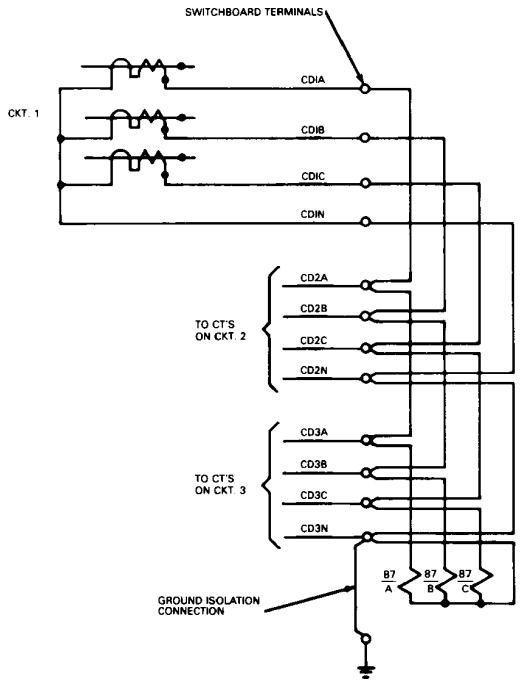

Figure 13—Sample Circuit Showing Preferred Grounding Method for Bus Differential Current- or Voltage-Type Relays

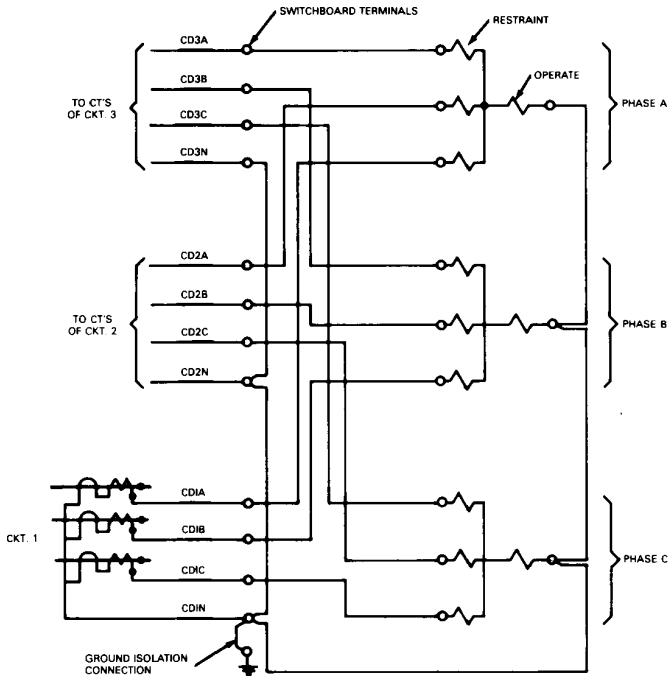

Figure 14—Bus Differential Percentage Differential Current

Copyright © 1983 IEEE All Rights Reserved

Copyright The Institute of Electrical and Electronics Engineers, Inc.
Provided by IHS under license with IEEE
No reproduction or networking permitted without license from IHS
Not for Resale

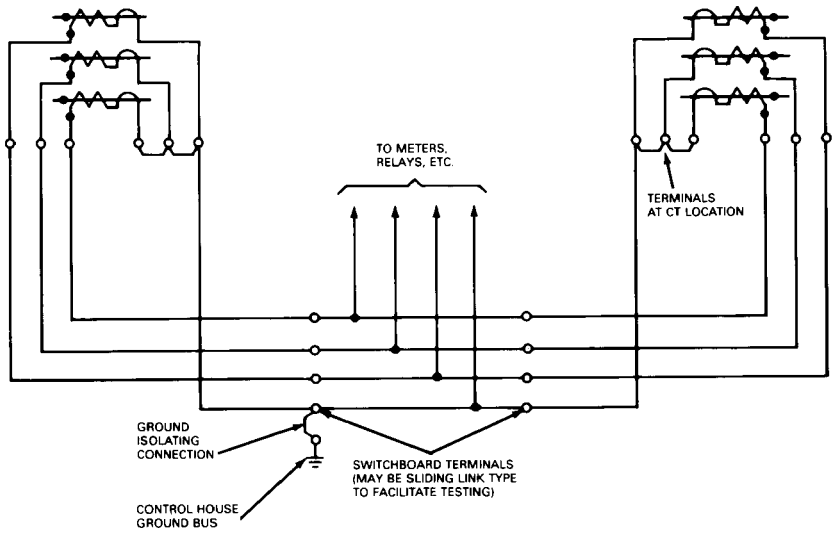

Figure 15—Sample Circuit Showing Preferred Grounding Method for Ring Bus or Breaker-and-a-Half

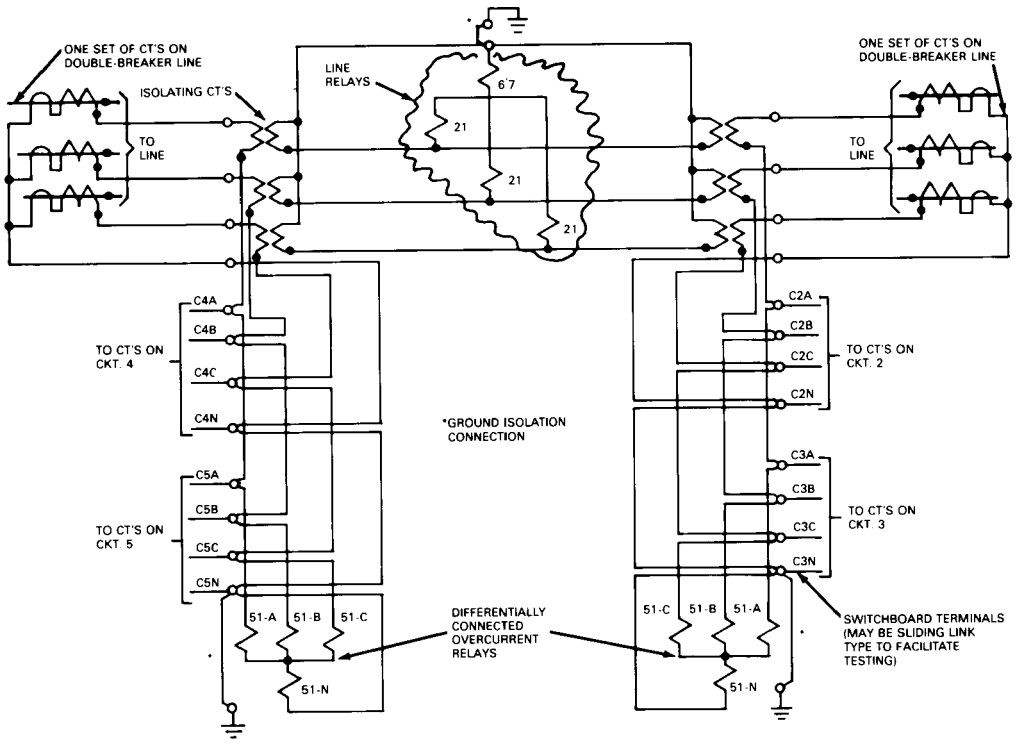

Figure 16—Sample Circuit Showing Preferred Grounding Arrangement for Multiple-Use CT's

Copyright © 1983 IEEE All Rights Reserved

Copyright The Institute of Electrical and Electronics Engineers, Inc.
Provided by IHS under license with IEEE
No reproduction or networking permitted without license from IHS
Not for Resale

3. Grounding of Instrument Transformer Cases and Cases of Connected Equipment

3.1 Metallic or Conductive Case Grounding

Metallic or conductive cases and frames of instrument transformers and the cases of connected equipment, such as instruments, meters, and relays having accessible conductive parts that may become live in case of faults, should have their conductive parts bonded together and effectively connected to a ground system in accordance with the recommendations of ANSI C1-1987 [1].

In general, the grounding conductor requirements are for wire sizes at least equal to the largest wire size used in the windings of the instrument transformer, relay, meter, or instrument, but in no case should grounding conductors be smaller than No. 12 AWG copper or its conductive equivalent. If the instrument transformer, relay, meter, or instrument has a metal case or frame that is mounted using conductive hardware to a metal panel, switchboard, or other conductive structure that is itself adequately grounded, it is not necessary for a separate grounding conductor to be provided.

3.2 Internal Conductive Parts—Insulated Cases

If any main structural metallic members are isolated from ground by being totally enclosed in insulating material, for example, a metal frame relay or instrument in a plastic case, and these metal parts are accessible to personnel performing operating maintenance, a protective ground terminal that is connected to the inactive interior conductive parts should be provided. The ground terminal should be connected to the ground system per 3.1. If for functional reasons these structural members must be isolated from ground, they should not be accessible to personnel. If accessible, a warning should be provided calling this hazard to the attention of the maintenance personnel.

3.3 Ungrounded Metallic or Conductive Cases

If the cases of equipment should be ungrounded for reasons specified in ANSI C1-1987 [1], they should be protected by suitable barriers or elevated to prevent contact if operating at or above 1 kV. If operating below 1 kV, mats of insulating rubber or other suitable floor insulation should be provided for protection of personnel. If no live or conductive parts or wiring are exposed or accessible, cases need not be grounded.

4. Exceptions to Grounding

Exceptions to grounding are permissible and sometimes required where advantages obtained by not grounding in certain instances or in certain types of installations are considered to outweigh the safety or other advantages obtained by grounding. Such exceptions should comply with the recommendations of ANSI C1-1987 [1], even though utilities are presently exempt from the requirements of this code. Grounding exceptions are generally permissible under the following circumstances.

1) If the primary windings of instrument transformer circuits are connected to circuits of less than 1000 V with no live parts or wiring exposed or accessible to other than qualified persons, the circuits need not be grounded.
2) For instrument transformer cases, the cases or frames of current transformers need not be grounded if the primary windings are not over 150 V to ground and are used exclusively to supply current to meters.

Copyright © 1983 IEEE All Rights Reserved

Copyright The Institute of Electrical and Electronics Engineers, Inc.
Provided by IHS under license with IEEE
No reproduction or networking permitted without license from IHS Not for Resale

3) Cases of instruments, meters, and relays operating at less than 1000 V on switchboards having exposed live parts on the front of panels should not be grounded. Mats of insulating rubber or other suitable floor insulation should be provided where voltage to ground exceeds 150 V.
4) Instruments, meters, and relays with operating voltage 1 kV and over (that is, with current-carrying parts of 1 kV and over to ground) should be isolated by elevation or protected by suitable barriers, grounded metal or insulating covers, or guards. Their cases should not be grounded.

5. Bibliography

[B1] ANSI C2-1987, National Electrical Safety Code.

[B2] ANSI/IEEE Std 80-1986, IEEE Guide for Safety in Substation Grounding.

[B3] ANSI/IEEE Std 142-1982, IEEE Recommended Practice for Grounding of Industrial and Commercial Power Systems.

[B4] ANSI/IEEE C37.90.1-1974 (R1979), IEEE Guide for Surge Withstand Capability (SWC) Tests.

[B5] ANSI/IEEE C62.92-1987, IEEE Guide for the Application of Neutral Grounding in Electrical Utility Systems, Part I—Introduction.

[B6] IEEE Std 525-1978, IEEE Guide for Selection and Installation of Control and Low-Voltage Cable Systems in Substations.

[B7] ELMORE, W. A. How Relay Circuits Can Be Protected. Electrical World, pp 60–61, February 1, 1972.

[B8] KOTHEIMER, W. C., and MANKOFF, L. L. Electromagnetic Interference and Solid-State Protective Relays. IEEE Transactions on Power Apparatus and Systems, vol PAS-96, pp 1311–1317, July/August 1977.

[B9] MORRISON, R. Grounding and Shielding Techniques in Instrumentation. New York: John Wiley & Sons, 1967.

[B10] OWEN, T. B. Electrical System Transients and Sensitive Circuit Control. Electrical Engineering, pp 1023–1027, December 1960.

Copyright © 1983 IEEE All Rights Reserved

Copyright The Institute of Electrical and Electronics Engineers, Inc.
Provided by IHS under license with IEEE
No reproduction or networking permitted without license from IHS
Not for Resale