ANSI/IEEE C57.13.1-1981
(reaffirmed 1986)
(ANSI Reaffirmed 1987)

An American National Standard

IEEE Guide for Field Testing of Relaying Current Transformers

Sponsor
Power System Relaying Committee
of the
IEEE Power Engineering Society

Approved 9 March 1978
Reaffirmed 18 June 1986
Reaffirmed 19 March 1992

IEEE Standards Board

Secretariat

Institute of Electrical and Electronics Engineers
National Electrical Manufacturers Association

Approved 31 December 1980
Reaffirmed 25 August 1987
Reaffirmed 2 December 1992

American National Standards Institute

© Copyright 1981 by

The Institute of Electrical and Electronics Engineers, Inc

No part of this publication may be reproduced in any form, in an electronic retrieval system or otherwise, without the prior written permission of the publisher.

Copyright The Institute of Electrical and Electronics Engineers, Inc.
Provided by IHS under license with IEEE
No reproduction or networking permitted without license from IHS
Not for Resale

American National Standard

An American National Standard implies a consensus of those substantially concerned with its scope and provisions. An American National Standard is intended as a guide to aid the manufacturer, the consumer, and the general public. The existence of an American National Standard does not in any respect preclude anyone, whether he has approved the standard or not, from manufacturing, marketing, purchasing, or using products, processes, or procedures not conforming to the standard. American National Standards are subject to periodic review and users are cautioned to obtain the latest editions.

CAUTION NOTICE: This American National Standard may be revised or withdrawn at any time. The procedures of the American National Standards Institute require that action be taken to reaffirm, revise, or withdraw this standard no later than five years from the date of publication. Purchasers of American National Standards may receive current information on all standards by calling or writing the American National Standards Institute.

Copyright The Institute of Electrical and Electronics Engineers, Inc.
Provided by IHS under license with IEEE
No reproduction or networking permitted without license from IHS
Not for Resale

Foreword

(This Foreword is not a part of ANSI/IEEE C57.13.1-1981, IEEE Guide for Field Testing of Relaying Current Transformers.)

This guide was prepared by a Working Group of the Relay Input Sources Subcommittee of the IEEE Power System Relaying Committee of the IEEE Power Engineering Society.

The working group expresses its gratitude to past members, members of the Relay Input Sources Subcommittee, Power System Relaying Committee, Liaison Committees, and groups who have contributed their time and knowledge in preparing this guide.

At the time it approved this standard, C57 had the following membership:

I. H. Koponen, *Chair*
C. R. Wilmore, *Secretary*

Organization Represented	*Name of Representative*
Bonneville Power Administration	George W. Iliff
Electric Light and Power Group	R. R. Bast
	I. O. Berkhan
	I. H. Koponen
	J. P. Markey (Alt)
	B. F. Smith
	E. A. Villasuso
Institute of Electrical and Electronics Engineers	S. Bennon
	W. P. Burt
	J. C. Dutton
	D. C. Johnson
	L. W. Long
	D. E. Massey
National Electrical Manufacturers Association	L. C. Aicher
	W. R. Courtade
	J. D. Douglass
	W. C. Kendall
	C. W. Mayall (Alt)
	W. J. McNutt
	Norman M. Neagle (Alt)
	R. L. Schwab
	R. E. Uptegraff, Jr
	G. C. Wilburn
Rural Electrification Administration	J. C. Arnold, Jr
Tennessee Valley Authority	L. R. Smith
Underwriters Laboratories	W. A. Farquhar (Alt)
	E. J. Huber
U.S. Bureau of Reclamation	S. J. Baxter

Copyright The Institute of Electrical and Electronics Engineers, Inc.
Provided by IHS under license with IEEE
No reproduction or networking permitted without license from IHS
Not for Resale

The Relay Input Sources Subcommittee of the Power System Relaying Committee of the IEEE Power Engineering Society, at the time that it reviewed and approved this guide, had the following membership:

D. R. Volzka, *Chair*
J. W. Walton, *Secretary*

F. G. Basso
J. Berdy
J. L. Blackburn
C. F. Burke
M. B. DeJarnette
C. M. Gadsden
F. B. Hunt
W. C. Kotheimer
W. A. Lewis
M. D. Limerick
J. Miller
A. R. Summers
A. Sweetana
J. M. Vanderleck
L. N. Walker
E. C. Wentz

At the time this guide was approved the members of the working group of the Relay Input Sources Subcommittee were:

D. R. Volzka, *Chair*

C. F. Burke
D. H. Colwell
M. D. Limerick
R. E. Linton
F. E. Newman

When this guide was approved March 9, 1978, the IEEE Standards Board had the following membership:

Joseph L. Koepfinger, *Chair*
Irvin N. Howell, Jr, *Vice Chair*
Ivan G. Easton, *Secretary*

William E. Andrus
C. N. Berglund
Edward J. Cohen
Warren H. Cook
David B. Dobson
R. O. Duncan
Charles W. Flint
Jay Forster
Ralph I. Hauser
Loering M. Johnson
Irving Kolodny
William R. Kruesi
Thomas J. Martin
John E. May
Donald T. Michael
Voss A. Moore
William S. Morgan
Robert L. Pritchard
Blair A. Rowley
Ralph M. Showers
B. W. Whittington

Copyright The Institute of Electrical and Electronics Engineers, Inc.
Provided by IHS under license with IEEE
No reproduction or networking permitted without license from IHS
Not for Resale

CLAUSE PAGE

1. Introduction 1

2. Consideration of American National Standards Institute (ANSI) Accuracy Classes 1

3. Safety Considerations in Field Testing Current Transformers 2

4. Current Transformer Types, Construction, Effect On Test Methods 2

4.1 Bushing, Window, or Bar-Type Current Transformers with Uniformly Distributed Windings 2
4.2 Wound Current Transformers, or Those without Uniformly Distributed Windings 2
4.3 Consideration of Remanence 3

5. Insulation Resistance Tests 4

6. Ratio Tests 4

6.1 Voltage Method 4
6.2 Current Method 5

7. Polarity Check 6

7.1 DC Voltage Test 6
7.2 AC Voltage Test — Oscilloscope 6
7.3 Current Method 7

8. Winding and Lead Resistance (Internal Resistance) 8

9. Excitation Test 8

10. Burden Measurements 10

11. Specialized Situations 10

11.1 Current Transformers in a Closed-Delta Transformer Connection 10
11.2 Generator Current Transformers 10
11.3 Intercore Coupling Check 11

--`,,`-`-`,,`,,`,`,,`---

Copyright The Institute of Electrical and Electronics Engineers, Inc.
Provided by IHS under license with IEEE
No reproduction or networking permitted without license from IHS Not for Resale

An American National Standard

IEEE Guide for Field Testing of Relaying Current Transformers

1. Introduction

In the application of protective relays, the most widely used input quantity is current. A multiplicity of different protective relays either utilizes current directly, combines it with other currents as in differential schemes, or combines it with voltage to make impedance or power measurements. The source of relay input current is from current transformers which may be located on the bushings of power circuit breakers and power transformers, on the bus bars of metal clad switchgear, or installed as separate items of equipment located as required.

The purpose of this guide is to describe field test methods that will assure that the current transformers are connected properly, are of marked ratio and polarity, and are in condition to perform as designed both initially and after a period of service.

2. Consideration of American National Standards Institute[1] (ANSI) Accuracy Classes

Relaying accuracy classes have been established in ANSI/IEEE C57.13-1978, Requirements for Instrument Transformers, to specify the performance of relaying current transformers. During faults on the electric power system, relaying current transformers must operate at high overcurrent levels. ANSI classifications, therefore, define minimum steady-state performance at these levels. Performance is described by using a two-term identification system consisting of a letter and a number selected from: (C,T) (10, 20, 50, 100, 200, 400, 800), for example, C400.

The first term of this identification describes performance in terms basically relating to construction and is discussed in Section 4.

The second term of this identification is the secondary terminal voltage rating. It specifies the secondary voltage that can be delivered by the full winding at 20 times rated secondary current without exceeding 10 percent ratio correction. As an example, a 100 V rating means that the ratio correction will not exceed 10 percent at any current from 1 to 20 times rated current with a standard 1.0 Ω burden. (1.0 Ω times 5 A times 20 times rated secondary current equals 100 V.) The ANSI voltage rating applies to the full secondary winding only. If other than the full winding is used, the voltage rating is reduced in approximate proportion to tums used.

[1]ANSI documents are available from the American National Standards Institute, 1430 Broadway, New York, NY 10010.

Copyright © 1981 IEEE All Rights Reserved

Copyright The Institute of Electrical and Electronics Engineers, Inc.
Provided by IHS under license with IEEE
No reproduction or networking permitted without license from IHS
Not for Resale

3. Safety Considerations in Field Testing Current Transformers

Many of the tests called for in this guide involve high voltage and, therefore, should be performed only by experienced personnel familiar with any peculiarities or dangers that may exist in the test setups and test procedures. While some dangers are specifically pointed out herein, it is impractical to list all necessary precautions.

Test procedures in 4.3, 6.1, 7.1, and 7.2 are described appropriately for the usual case where secondary tums are more numerous than primary turns. In the unusual case where primary turns are more numerous than secondary turns, *primary* and *secondary* and H1 and X1 should be interchanged in these paragraphs and related figures.

4. Current Transformer Types, Construction, Effect On Test Methods

Current transformers for protective relay applications are divided into two general categories which affect test methods.

4.1 Bushing, Window, or Bar-Type Current Transformers with Uniformly Distributed Windings

Current transformers of this type have no “primary winding” but rather utilize the primary conductor passing once through the center of a toroidal core to perform this function. Since the secondary winding is uniformly distributed about the core and only a single primary turn is used, essentially all flux which links the primary conductor also links the secondary winding as shown in Fig 1.

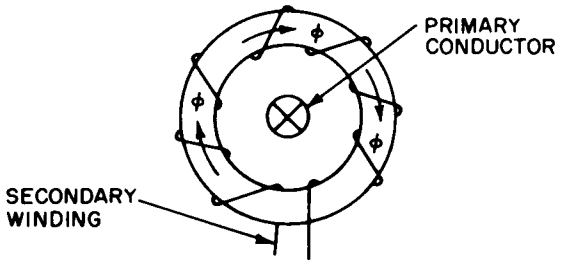

Figure 1—Uniformly Distributed Secondary Winding

Because there is essentially no leakage flux in such a device, it has negligible leakage reactance. Therefore, the excitation characteristic can be used directly to determine performance. Current transformers of this type have a C classification per ANSI/IEEE C57.13-1978, indicating that ratio correction at any current can be calculated adequately if the burden, secondary winding resistance, and the excitation characteristics are known. ANSI/IEEE C57.13-1978 states that if transformers have C classification on the full winding, all tapped sections shall be so arranged that the ratio can be calculated from excitation characteristics. Previous issues of ANSI/IEEE C57.13 did not require such arrangement of tapped sections.

4.2 Wound Current Transformers, or Those without Uniformly Distributed Windings

Wound-type current transformers are usually constructed with more than one primary turn and undistributed windings. Because of the physical space required for insulation and bracing of the primary winding and fringing effects of nonuniformly distributed windings, flux is present which does not link both primary and secondary windings. Figure 2 is included to clearly illustrate the effect but does not reflect usual construction practice.

Copyright © 1981 IEEE All Rights Reserved

Copyright The Institute of Electrical and Electronics Engineers, Inc.
Provided by IHS under license with IEEE
No reproduction or networking permitted without license from IHS Not for Resale

The presence of such leakage flux has a significant effect on current transformer performance. When this flux is appreciable, it is not possible to calculate ratio correction knowing the burden and the excitation characteristic. Units of this type have a T classification in accordance with ANSI/IEEE C57.13-1978, indicating that ratio correction is to be determined by test.

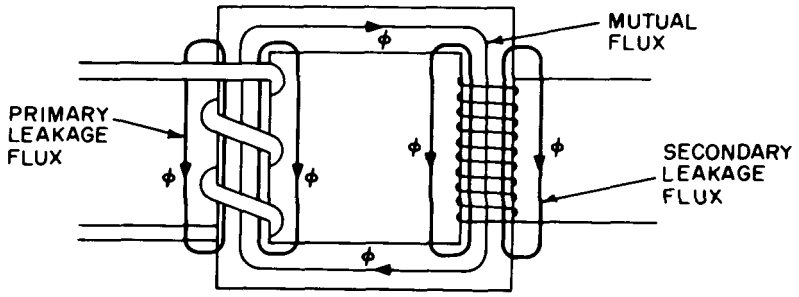

Figure 2—Leakage Flux Associated with Class T Current Transformers

4.3 Consideration of Remanence

The performance of both C and T class current transformers is influenced by remanence or residual magnetism. The available core materials are all subject to hysteresis. The phenomenon is shown by plotting curves of magnetic flux density as a function of magnetizing force as shown in Fig 3(a). When the current is interrupted, the curves show that the flux density does not become zero when the current does.

When the current contains a dc component, the magnetizing force in one direction is much greater than in the other. The curves resulting are both displaced from the origin and distorted in shape, with a large extension to right or left in the direction of the dc component as noted in Fig 3(b). If the current which is interrupted is high, or if it contains a large dc component and is interrupted when total flux is high, remanence will be substantial, perhaps being above the flux equivalent of the knee point shown on the excitation curve of Fig 10.

When the current transformer is next energized, the flux changes required will start from the remanent value, and if the required change is in the direction to add to the remanent flux, a large part of the cycle may find the current transformer saturated. When this occurs, much of the primary current is required for excitation, and secondary output is significantly reduced and distorted on alternate half cycles.

This condition can be corrected by demagnetizing the current transformer. It is accomplished by applying a suitable variable alternating voltage to the secondary, with initial magnitude sufficient to force the flux density above the saturation point, and then decreasing the applied voltage slowly and continuously to zero. If there is any reason to suspect that a current transformer has been recently subjected to heavy currents, possibly involving a large dc component, or been magnetized by any application of dc voltage, it should be demagnetized before being used for any test requiring accurate current measurement. Test connections are identical to those required for the excitation test as shown in Fig 9.

Copyright © 1981 IEEE All Rights Reserved

Copyright The Institute of Electrical and Electronics Engineers, Inc.
Provided by IHS under license with IEEE
No reproduction or networking permitted without license from IHS
Not for Resale

5. Insulation Resistance Tests

Insulation resistance between the current transformer secondary and ground is usually checked by the use of conventional insulation test instruments. The neutral ground must be removed and the current transformer preferably isolated from its burden for this test. Actually, the neutral can be used to test all three phases simultaneously.

If relays are left connected to the current transformers during the test, the relay manufacturer should be consulted before test values above 500 V are used. Many solid-state relay designs have surge-suppression capacitors connected from input terminals to ground which may be damaged by use of a higher voltage.

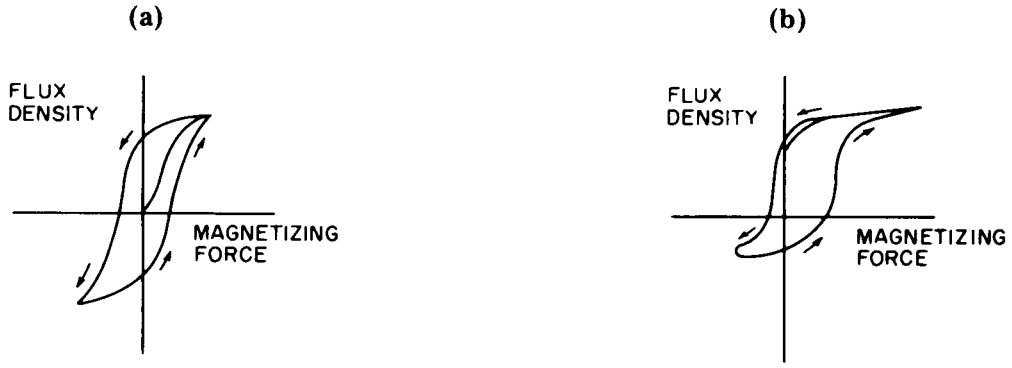

Figure 3—Hysteresis Curves:
(a) — Normal Hysteresis Curve; (b) — Hysteresis Curve with Remanence

The resistance should be compared with those of similar devices or circuits. Readings lower than those known to be good should be carefully investigated. The generally accepted minimum insulation resistance is 1 MΩ. One of the most common reasons for low readings is the presence of moisture. Drying out the equipment and retesting should be considered before it is dismantled.

6. Ratio Tests

There are two generally accepted methods of checking the tums ratio of all types of current transformers.

6.1 Voltage Method

A suitable voltage, below saturation, is applied to the secondary (full winding), and the primary voltage is read with a high-impedance (20 000 Ω/V or greater) low-range voltmeter as shown in Fig 4. The turns ratio is approximately equal to the voltage ratio. Saturation level is usually about 1 V per turn in most low- and medium-ratio bushing current transformers. High-ratio generator current transformers and window-type current transformers used in metal-clad switchgear may have saturation levels lower than 0.5 V per turn. In the case of very high, ratio current transformers, application of a test voltage with an even lower voltage per turn may be required to avoid personnel hazard and possible damage to equipment. The ANSI relay accuracy class voltage rating should not be exceeded during this test.

At the same time the overall ratio is being determined, the tap section ratios may be checked with a voltmeter by comparing tap section voltage with the impressed voltage across the full winding. An ammeter is included in the recommended test method as a means of detecting excessive excitation current.

CAUTION — If more convenient, voltage may be applied to a section of the secondary winding; however, voltage across the full winding will be proportionately higher because of autotransformer action.

Copyright © 1981 IEEE All Rights Reserved

Copyright The Institute of Electrical and Electronics Engineers, Inc.
Provided by IHS under license with IEEE
No reproduction or networking permitted without license from IHS
Not for Resale

6.2 Current Method

This method of determining the turns ratio requires a source of high current, an additional current transformer of known ratio with its own ammeter, and a second ammeter for the transformer under test. Any other current transformers that may be in series with the transformer under test should be short circuited and possibly disconnected from their burdens if damage to other meters or relays, or accidental tripping, is likely. This method is not practical for current transformers in an assembled power transformer or generator. See Section 11 for test methods recommended for them.

A source of current for this test could be a loading transformer weighing approximately 80 lb, rated 120/240 — 6 V with a secondary current rating of 1200 A for 30 min. Different loading transformers are available, some with much higher current ratings. A variable auto-transformer is also required to control the primary voltage of the loading transformer. The test equipment connections are shown in Fig 5.

The test is performed by adjusting the high-current test source to a series of values over the desired range and recording the two secondary currents. The ratio of the transformer under test is equal to the tums ratio of the reference transformer multiplied by the ratio of the reference transformer secondary current to the test transformer secondary current:

$$N_T = N_R \frac{I_R}{I_T}$$

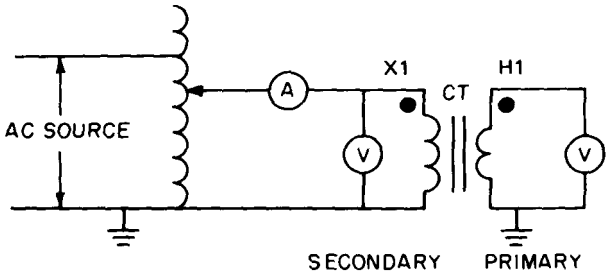

Figure 4—Ratio Test by Voltage Method

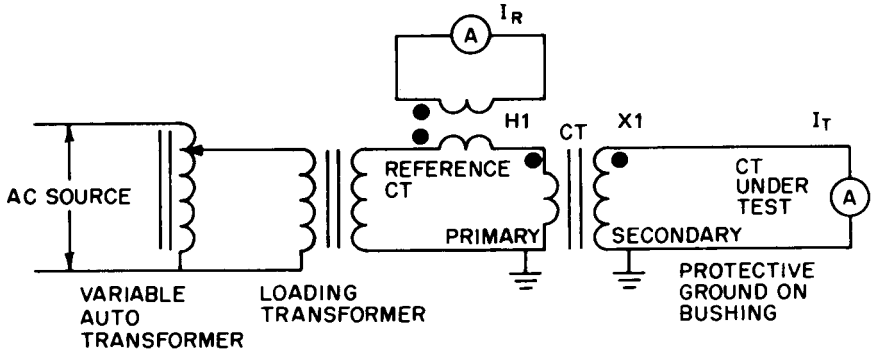

Figure 5—Ratio Test by Current Method

Copyright © 1981 IEEE All Rights Reserved

Copyright The Institute of Electrical and Electronics Engineers, Inc.
Provided by IHS under license with IEEE
No reproduction or networking permitted without license from IHS
Not for Resale

Polarity may be checked by the method in 7.3 after completion of this test.

In performing this test, the tester should be aware that stray flux can produce significant changes in performance. Test conductors should, therefore, be extended as far as possible along the axis of the current transformer to minimize stray flux influence. This problem is of particular concern with window-type current transformers.

It is undesirable to use multiple tums of the test conductor through the center of a window-type current transformer to reduce its ratio because this may produce an abnormal secondary leakage reactance and misleading results in the ratio measurement. The effect is unpredictable and, although small with modem distributed winding current transformers and low secondary burdens, it may produce significant error on older current transformers, particularly when high burdens are connected.

7. Polarity Check

There are three generally accepted methods of checking current transformer polarity.

7.1 DC Voltage Test

In this test, a 6 to 10 V lantern-type battery is connected momentarily to the secondary of the transformer under test and the momentary deflection of a milliammeter or millivoltmeter connected to the primary noted. If the positive terminal of the battery is connected to terminal X1 and the positive terminal of the milliammeter is connected to terminal H1, as shown in Fig 6, the deflection will be upscale when the battery is connected and downscale when it is disconnected, if the polarity is in accordance with terminal markings. This test is also valid with the battery applied to the primary and the meter connected to the secondary. It is advisable to demagnetize any current transformer that is tested by impressing dc voltage across a winding.

If a bushing current transformer installed in a power transformer is being tested by connecting the battery to the power transformer terminals, the other windings on the same phase of the power transformer may have to be short circuited in order to obtain a reading.

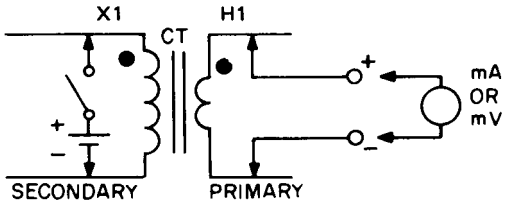

Figure 6—Polarity Test with DC Voltage

CAUTION — A dangerous voltage may be generated while disconnecting the battery from the transformer winding. Therefore, if a knife switch is not used, a hot stick or rubber gloves must be used for connecting and disconnecting the battery.

7.2 AC Voltage Test — Oscilloscope

An oscilloscope can be used to check current transformer polarity as shown in Fig 7. The method used is to apply an ac voltage to the secondary winding and compare it with the voltage induced in the primary winding.

Copyright © 1981 IEEE All Rights Reserved

Copyright The Institute of Electrical and Electronics Engineers, Inc.
Provided by IHS under license with IEEE
No reproduction or networking permitted without license from IHS
Not for Resale

If only a single channel oscilloscope is available, the preferred method is to apply secondary voltage to the vertical input terminals *V* and primary voltage to the horizontal input terminals *H* with polarities as indicated on the diagram. If the slope of the line is positive as shown, as it would be when the same voltage is applied to both inputs, the polarity is in accordance with terminal markings.

If a dual channel oscilloscope is available, primary and secondary voltages should be displayed on separate channels. If the resulting waveforms are in agreement, as they would be when the same voltage is applied to both channels, the polarity is correct. If the oscilloscope is calibrated, the current-transformer ratio can be obtained directly by measuring the magnitude of the voltage waveforms and multiplying by the scale constants of the oscilloscope. The ammeter is provided only to provide indication of excessive excitation current.

This test can be made in conjunction with the ratio test of 6.1. It can also be used to test a current transformer in a closed delta winding of a 3-phase power transformer as discussed in 11.1.

7.3 Current Method

After the ratio test of 6.2, polarity can be conveniently checked by paralleling the reference current transformer secondary with the test transformer secondary through two ammeters as shown in Fig 8. If A_2 ammeter is reading higher than A_1, the polarity is in accordance with terminal markings.

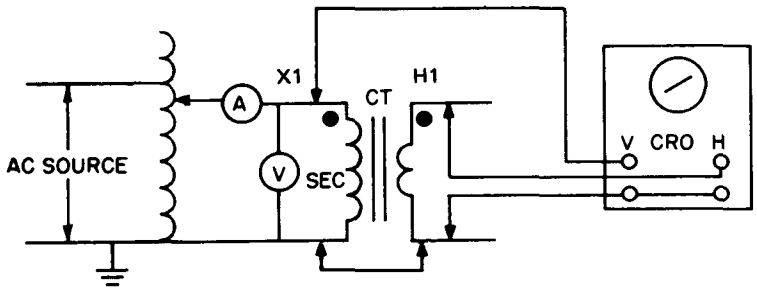

Figure 7—Polarity Test with AC Voltage

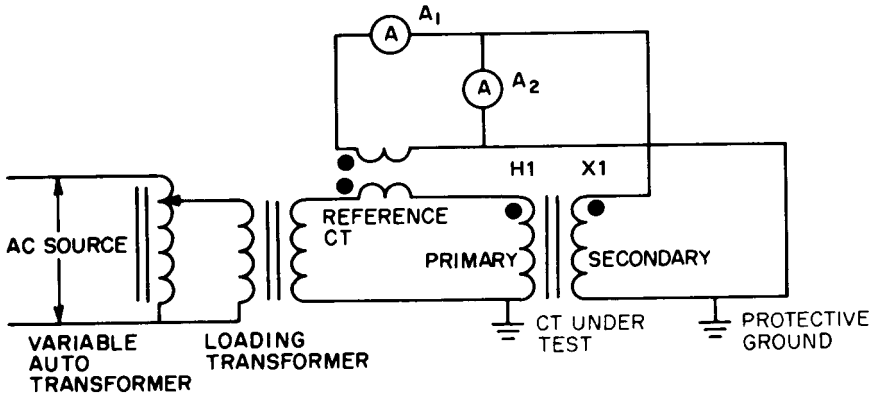

Figure 8—Polarity Test with AC Current

Copyright © 1981 IEEE All Rights Reserved

Copyright The Institute of Electrical and Electronics Engineers, Inc.
Provided by IHS under license with IEEE
No reproduction or networking permitted without license from IHS
Not for Resale

8. Winding and Lead Resistance (Internal Resistance)

In order to calculate ratio correction for a class C current transformer, its internal resistance and the external impedance (including secondary lead resistance) must be known. The internal winding and lead resistance can be measured with a resistance bridge. Usually, it is sufficient to use the average value of resistance of the current transformers in the three phases for calculations. If it is desired to separate lead resistance and winding resistance to provide data for other calculations, the resistance of the full winding and of a tap should be measured. Assuming all tums are of equal resistance, the per-turn resistance and lead resistance can be calculated. All measurements should be made at the current-transformer short-circuiting terminal block. Because of possible remanence, the current transformer should be demagnetized after completion of this test as outlined in 4.3. As previously mentioned, proper safety precautions should be taken when connecting and disconnecting the bridge because of potentially dangerous spike voltages.

The procedure for measuring external burden is presented in Section 10..

9. Excitation Test

Excitation tests can be made on both C and T class current transformers to permit comparison with published or previously measured data to determine if deviations are present.

Before the excitation test is made, the current transformer should be demagnetized as described in 4.3.

To perform the test, an ac test voltage is applied to the secondary winding with the primary open circuited as shown in Fig 9. The voltage applied to the secondary of the current transformer is varied, and the current drawn by the winding at each selected value of voltage is recorded. Readings near the knee of the excitation curve are especially important in plotting a comparison curve. For current transformers with taps, the secondary tap should be selected to assure that the current transformer can be saturated with the test equipment available. The highest tap which can accommodate that requirement should be used.

The selection of instruments is especially important for this test. The ammeter should be an rms instrument. The voltmeter should be an average reading voltmeter consisting of a d'Arsonval instrument connected across a full-wave rectifier. It should be calibrated to give the same numerical indication as an rms voltmeter on sine-wave voltage.

CAUTION — If voltage is applied to a portion of the secondary winding, the voltage across the full winding will be proportionately higher because of autotransformer action. Current transformers should not remain energized at voltages above the knee of the excitation curve any longer than is necessary to take readings.

Any substantial deviation of the excitation curve for the current transformer under test from curves of similar transformers or manufacturer's data should be investigated. Typical excitation curves are shown in Fig 10. Deviation from expected results may indicate a turn-to-turn short circuit, distortion of test supply voltage waveform, or the presence of a completed conducting path around the current transformer core.

This test can also be performed by energizing the current transformer primary from a high-current test source and plotting primary exciting current versus secondary open-circuit voltage. The current must be divided by the current transformer ratio in order to compare this data with Fig 10.

Copyright © 1981 IEEE All Rights Reserved

Copyright The Institute of Electrical and Electronics Engineers, Inc.
Provided by IHS under license with IEEE
No reproduction or networking permitted without license from IHS Not for Resale

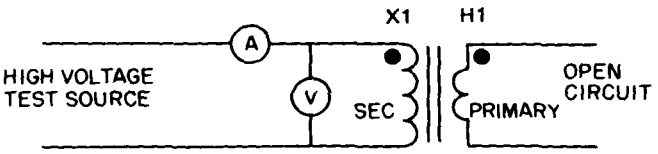

Figure 9—Excitation Test

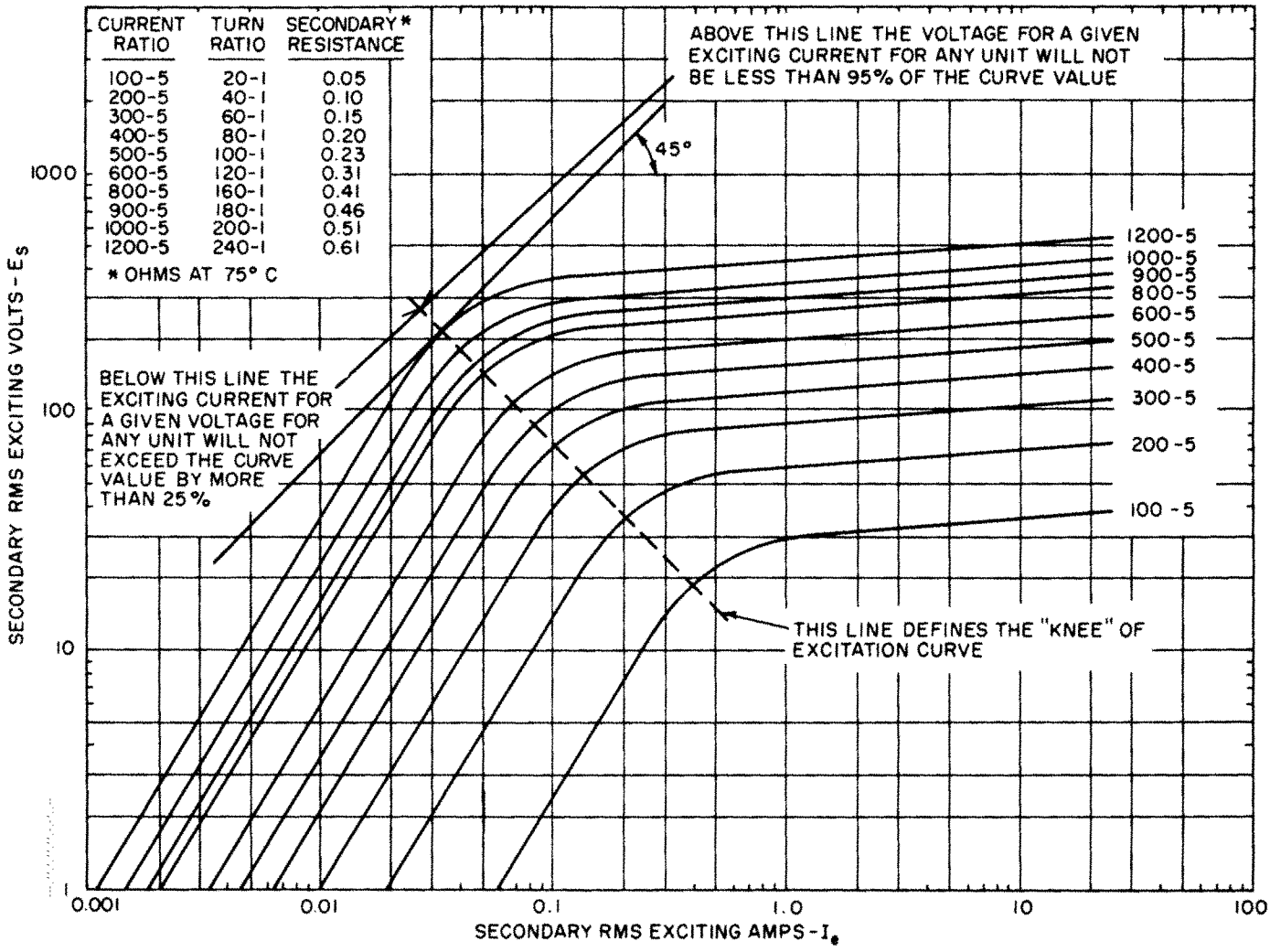

Figure 10—Typical Excitation Curve for C Class Multiratio Current Transformer

Copyright © 1981 IEEE All Rights Reserved

Copyright The Institute of Electrical and Electronics Engineers, Inc.
Provided by IHS under license with IEEE
No reproduction or networking permitted without license from IHS
Not for Resale

10. Burden Measurements

Burden measurements and system short-circuit current provide data for calculating ratio-correction factors for class C current transformers. Using these factors it is possible to analyze relay performance. The total burden of the circuit, which is the sum of the internal current transformer burden and the external connected burden, must be determined.

The internal burden is the resistance of the secondary winding plus the lead resistance from the winding to the short-circuiting terminal block converted to volt-amperes at rated secondary current. The procedure for measuring internal resistance is described in Section 8.

The external connected burden can either be calculated or measured. To determine the external connected burden in volt-amperes, measure the voltage required to drive rated current through the connected burden. If both resistive and reactive components of the burden are desired, a suitable phase-angle meter can be connected.

Burden measurements, when compared with calculated values, help to confirm circuit wiring and satisfactory contact resistances of terminal blocks and test devices.

The following reminders have been found useful in obtaining correct burden data:

1) To represent in-service burden, the relays and other external devices must be on the correct tap.
2) Parallel current transformers should be disconnected.
3) Phase-to-neutral measurements in relay circuits can be high, particularly if ground relays with sensitive settings are involved.
4) Phase-to-neutral and phase-to-phase measurements of bus differential circuits can be high because of the impedance of the differential relay operating coil.

11. Specialized Situations

From time to time, the tester will encounter assembled equipment which cannot be tested by the “normal” test methods outlined above. In some cases, partial testing may be accomplished prior to complete assembly. Alternate methods for testing assembled equipment are described below.

11.1 Current Transformers in a Closed-Delta Transformer Connection

Ratio and polarity tests must be made prior to assembly if the delta winding terminals are not brought out. Ratio tests must be made by the voltage method of 6.1. Main power transformer excitation requirements and impedance would require a test set with much higher capacity than is normally found in order to use the current method.

The tester should be made aware that it is necessary to short circuit the unused winding of the affected phase of the power transformer when making the polarity test of 7.1.

11.2 Generator Current Transformers

High-ratio generator current transformers present a special type of problem. The voltage method affords the only practical method of performing a ratio test. A convenient method of checking both ratio and polarity is to use a dual channel or dual trace oscilloscope to measure the magnitudes and phase relationships. The procedure is outlined in 7.2.

Copyright © 1981 IEEE All Rights Reserved

Copyright The Institute of Electrical and Electronics Engineers, Inc.
Provided by IHS under license with IEEE
No reproduction or networking permitted without license from IHS Not for Resale

11.3 Intercore Coupling Check

In many cases, such as circuit breaker bushings and separately mounted extra-high-voltage current transformers, several secondary cores are mounted in close proximity on the same primary lead. It is possible to have coupling between these cores that may not appear as a short circuited turn in the excitation test, Section 9, but which can cause a detectable imbalance in a bus differential relay circuit.

Intercore coupling occurs when a spurious metallic conducting path is established which encircles more than one current transformer. It may not be detectable with the excitation test if enough resistance is present in the conducting path.

Intercore coupling will occur if one of the following conditions is present:

1) If the current transformer support is in contact with the bushing ground sleeve, making a single turn conducting path around the bushing current transformer
2) If a surge protector across the H1 – H2 terminals of an oil-filled current transformer is short circuited or if the H2 insulation fails
3) If the insulation of grading shields surrounding the cores of an SF_6 - filled current transformer fails
4) If the insulation on the metal support for the primary insulation on an oil-filled current transformer fails and establishes a conducting path through the support

To determine if there is coupling between cores, the excitation test should be repeated, and the voltage across the full winding on each of the adjacent cores should be measured one at a time with all other current-transformer secondary windings shorted. A high-impedance voltmeter (20 000 Ω/V or greater) will read less than 1 or 2 V if there is no intercore coupling. If there is coupling, the voltage will be substantially higher.

Copyright © 1981 IEEE All Rights Reserved

--`,,`-`-`,,`,,`,`,,`---
Copyright The Institute of Electrical and Electronics Engineers, Inc.
Provided by IHS under license with IEEE
No reproduction or networking permitted without license from IHS Not for Resale