IEEE Standard General Requirements and Test Code for Oil-Immersed HVDC Converter Transformers

Sponsor

Transformers Committee
of the
IEEE Power Engineering Society

Approved 16 September 1999

IEEE-SA Standards Board

Abstract: The electrical, mechanical, and physical requirements of oil-immersed single-phase and three-phase converter transformers are specified. Tests are described and test code defined. Devices such as arc furnace transformers and rectifier transformers for industrial or locomotive applications are not covered.
Keywords: construction, converter transformers, HVDC, oil-immersed, rating, requirements, tests, test code

---

The Institute of Electrical and Electronics Engineers, Inc.
3 Park Avenue, New York, NY 10016-5997, USA

Copyright © 2000 by the Institute of Electrical and Electronics Engineers, Inc.
All rights reserved. Published 6 June 2000. Printed in the United States of America.

Print: ISBN 0-7381-1835-4 SH94800
PDF: ISBN 0-7381-1836-2 SS94800

No part of this publication may be reproduced in any form, in an electronic retrieval system or otherwise, without the prior written permission of the publisher.

Copyright The Institute of Electrical and Electronics Engineers, Inc.
Provided by IHS under license with IEEE
No reproduction or networking permitted without license from IHS Not for Resale

IEEE Standards documents are developed within the IEEE Societies and the Standards Coordinating Committees of the IEEE Standards Association (IEEE-SA) Standards Board. Members of the committees serve voluntarily and without compensation. They are not necessarily members of the Institute. The standards developed within IEEE represent a consensus of the broad expertise on the subject within the Institute as well as those activities outside of IEEE that have expressed an interest in participating in the development of the standard.

Use of an IEEE Standard is wholly voluntary. The existence of an IEEE Standard does not imply that there are no other ways to produce, test, measure, purchase, market, or provide other goods and services related to the scope of the IEEE Standard. Furthermore, the viewpoint expressed at the time a standard is approved and issued is subject to change brought about through developments in the state of the art and comments received from users of the standard. Every IEEE Standard is subjected to review at least every five years for revision or reaffirmation. When a document is more than five years old and has not been reaffirmed, it is reasonable to conclude that its contents, although still of some value, do not wholly reflect the present state of the art. Users are cautioned to check to determine that they have the latest edition of any IEEE Standard.

Comments for revision of IEEE Standards are welcome from any interested party, regardless of membership affiliation with IEEE. Suggestions for changes in documents should be in the form of a proposed change of text, together with appropriate supporting comments.

Interpretations: Occasionally questions may arise regarding the meaning of portions of standards as they relate to specific applications. When the need for interpretations is brought to the attention of IEEE, the Institute will initiate action to prepare appropriate responses. Since IEEE Standards represent a consensus of all concerned interests, it is important to ensure that any interpretation has also received the concurrence of a balance of interests. For this reason, IEEE and the members of its societies and Standards Coordinating Committees are not able to provide an instant response to interpretation requests except in those cases where the matter has previously received formal consideration.

Comments on standards and requests for interpretations should be addressed to:

Secretary, IEEE-SA Standards Board
445 Hoes Lane
P.O. Box 1331
Piscataway, NJ 08855-1331
USA

Note: Attention is called to the possibility that implementation of this standard may require use of subject matter covered by patent rights. By publication of this standard, no position is taken with respect to the existence or validity of any patent rights in connection therewith. The IEEE shall not be responsible for identifying patents for which a license may be required by an IEEE standard or for conducting inquiries into the legal validity or scope of those patents that are brought to its attention.

IEEE is the sole entity that may authorize the use of certification marks, trademarks, or other designations to indicate compliance with the materials set forth herein.

Authorization to photocopy portions of any individual standard for internal or personal use is granted by the Institute of Electrical and Electronics Engineers, Inc., provided that the appropriate fee is paid to Copyright Clearance Center. To arrange for payment of licensing fee, please contact Copyright Clearance Center, Customer Service, 222 Rosewood Drive, Danvers, MA 01923 USA; (978) 750-8400. Permission to photocopy portions of any individual standard for educational classroom use can also be obtained through the Copyright Clearance Center.

--`,,`-`-`,,`,,`,`,,`---
Copyright The Institute of Electrical and Electronics Engineers, Inc.
Provided by IHS under license with IEEE
No reproduction or networking permitted without license from IHS
Not for Resale

Introduction

(This introduction is not part of IEEE Std C57.129-1999, IEEE Standard General Requirements and Test Code for Oil-Immersed HVDC Converter Transformers.)

In 1986, the Transformers Committee of the IEEE Power Engineering Society created the HVDC Converter Transformers and Smoothing Reactors Subcommittee. This subcommittee developed from the working group that prepared Paper 85 SM 375-1, “Recommended Dielectric Tests and Test Procedures for Converter Transformers and Smoothing Reactors.” Although HVDC transformers and smoothing reactors were being built and operated for over 20 years, prior to this standard there were only two papers available that presented suggested dielectric tests for the HVDC equipment: IEEE Paper 85 mentioned above, and a CIGRÉ paper published in 1976. Clearly, with the increased activity in HVDC transmission, there was a significant need for a standard covering the requirements and testing of inductive equipment for HVDC stations, and the first responsibility of the new subcommittee was to create a proposed standard for HVDC stressed equipment. Two separate standards have been developed—one for oil-immersed transformers and one for both dry-type and oil-immersed smoothing reactors.

Significant accomplishments of this standard include:

— Establishment of dielectric tests on HVDC transformers. In addition to the polarity reversal test and long-term dc tests recommended by the previous papers, a special 1 h ac applied voltage test on the dc-side winding has been included to demonstrate insulation integrity for service conditions. The duration of the long-term dc test has been increased, and the polarity reversal test has been modified to include two reversals instead of one.

— Establishment of a procedure for measuring load losses at higher harmonics.

At the time of publication of this document, membership of the HVDC Converter Transformers and Smoothing Reactors Subcommittee of the IEEE Transformers Committee was as follows:

Richard Dudley, *Co-Chair*
William (Bill) N. Kennedy, *Co-Chair*

D. J. Allan
James Cross
V. Dahinden
Fred E. Elliot
Joe Foldi
J. Alan C. Forrest
Lars-Erik Juhlin
Klaus Papp
Carlos Piexoto
Einar Purpa
Pierre Riffon
Georges H. Vaillancourt
Joe D. Watson

Other individuals who contributed to the development of the document are:

Frank David
Donald A. Gillies
Peter Iijima
Jack W. McGill
E. T. Norton
V. Q. Pham
W. W. Stein

Copyright ' 2000 IEEE. All rights reserved.

Copyright The Institute of Electrical and Electronics Engineers, Inc.
Provided by IHS under license with IEEE
No reproduction or networking permitted without license from IHS
Not for Resale

The following members of the balloting committee voted on this standard:

R. K. Ahuja
George Allen
Glenn Andersen
Jacques Aubin
Mike Barnes
A. Bartek
William H. Bartley
Martin Baur
Wallace B. Binder
Alain Bolliger
Donald J. Cash
James F. Christensen
Frank David
Dieter Dohnal
Richard F. Dudley
John A. Ebert
Fred E. Elliott
Gary R. Engmann
Joe Foldi
Marcel Fortin
Michael A. Franchek
Juergen Gerth
Donald A. Gillies
Richard D. Graham
N. Wayne Hansen
Keith R. Highton
Philip J. Hopkinson
Carl Hurty
Gerhard W. Juette
Lars-Erik Juhlin
William N. Kennedy
Sheldon P. Kennedy
Lawrence A. Kirchner
Alexander D. Kline
Egon Koenig
Lincoln Koga
Barin Kumar
William A. Maguire
John W. Matthews
Nigel P. McQuin
R. E. Minkwitz, Sr.
Daleep C. Mohla
Paul E. Orehek
Klaus Papp
Dhiru S. Patel
Paulette A. Payne
Carlos Peixoto
Mark D. Perkins
Linden W. Pierce
Tom A. Prevost
Jeewan L. Puri
J. C. Riboud
Peter G. Risse
Chris A. Robbins
Hazairin Samaulah
Subhas Sarkar
William E. Saxon
Michael Schacker
Pat Scully
Mark Siehling
Hyeong Jin Sim
Kenneth R. Skinger
James E. Smith
James A. Thompson
Duane R. Torgerson
Subhash C. Tuli
Robert A. Veitch
Barry H. Ward
Joe D. Watson
William G. Wimmer

When the IEEE-SA Standards Board approved this standard on 16 September 1999, it had the following membership:

Richard J. Holleman, *Chair*
Donald N. Heirman, *Vice Chair*
Judith Gorman, *Secretary*

Satish K. Aggarwal
Dennis Bodson
Mark D. Bowman
James T. Carlo
Gary R. Engmann
Harold E. Epstein
Jay Forster*
Ruben D. Garzon
James H. Gurney
Lowell G. Johnson
Robert J. Kennelly
E. G. “Al” Kiener
Joseph L. Koepfinger*
L. Bruce McClung
Daleep C. Mohla
Robert F. Munzner
Louis-François Pau
Ronald C. Petersen
Gerald H. Peterson
John B. Posey
Gary S. Robinson
Akio Tojo
Hans E. Weinrich
Donald W. Zipse

*Member Emeritus

Also included is the following nonvoting IEEE-SA Standards Board liaison:

Robert E. Hebner

Greg Kohn
IEEE Standards Project Editor

Copyright ' 2000 IEEE. All rights reserved.

Copyright The Institute of Electrical and Electronics Engineers, Inc.
Provided by IHS under license with IEEE
No reproduction or networking permitted without license from IHS
Not for Resale

Contents

1. Scope 1

2. References 1

3. Definitions 3

4. Letter symbols 3

5. General requirements—systems and environmental data 4

   5.1 Usual service conditions 4
   5.2 Loading at other than rated conditions 5
   5.3 Unusual service conditions 5

6. Rating data 5

   6.1 Cooling classes of converter transformers 5
   6.2 Frequency 5
   6.3 Phases 6
   6.4 Rated kilovoltamperes 6
   6.5 Rated current 6
   6.6 Voltage ratings and taps for converter transformers 6
   6.7 Connections 6
   6.8 Polarity, angular displacement, and terminal markings for converter transformers 6
   6.9 Impedance 6
   6.10 Total losses 6
   6.11 Insulation levels 10
   6.12 Temperature rise and loading conditions 12
   6.13 Loss capitalization rates 12
   6.14 Sound level limits 12
   6.15 Auxiliary power supply voltage 12

7. Construction 13

   7.1 General 13
   7.2 Tank and component design 13
   7.3 Oil preservation 13
   7.4 Auxiliary equipment 13

8. Tests 15

   8.1 General 15
   8.2 Routine, design, and other tests 15
   8.3 Additional routine tests for converter transformers with load tap changing or regulating transformers 17

9. Test code 17

   9.1 General 17
   9.2 Resistance measurements 17
   9.3 Polarity and phase-relation tests 17

Copyright ' 2000 IEEE. All rights reserved.

Copyright The Institute of Electrical and Electronics Engineers, Inc.
Provided by IHS under license with IEEE
No reproduction or networking permitted without license from IHS
Not for Resale

9.4 Ratio tests 17
9.5 No-load losses and excitation current 17
9.6 Impedance and load losses 18
9.7 Dielectric tests 19
9.8 Temperature rise 24
9.9 Short circuit test 25
9.10 Audible sound test 25

10. Tolerances 25

10.1 Tolerance on ratio 25
10.2 Tolerance on impedance 25
10.3 Tolerance on losses 25

Annex C (informative) Determination of loss adjustment factors 27

Annex B (informative) Power testing concepts and methodologies under consideration 31

Annex C (informative) Bibliography 33

Copyright ' 2000 IEEE. All rights reserved.

Copyright The Institute of Electrical and Electronics Engineers, Inc.
Provided by IHS under license with IEEE
No reproduction or networking permitted without license from IHS
Not for Resale

IEEE Standard General Requirements and Test Code for Oil-Immersed HVDC Converter Transformers

1. Scope

This standard specifies the electrical, mechanical, and physical requirements of oil-immersed single-phase and three-phase converter transformers.

This standard does not apply to other devices, such as the following:

— Arc furnace transformers.
— Rectifier transformers for industrial or locomotive applications.

2. References

This standard shall be used in conjunction with the following publications:

ANSI B1.1-1989, American National Standard for Unified Inch Screw Threads (UN and UNR Thread Form).[1]

ANSI C57.12.10-1988, American National Standard for Transformers—230 kV and Below 833\958 through 8333/10 417 kVA, Single-Phase, and 750/862 through 60 000/80 000/100 000 kVA, Three-Phase without Load Tap Changing; and 3750/4687 through 60 000/80 000/100 000 kVA with Load Tap Changing—Safety Requirements.

ANSI C57.12.70-1978 (R 1992), American National Standard Terminal Markings and Connections for Distribution and Power Transformers.

[1]ANSI publications are available from the Sales Department, American National Standards Institute, 11 West 42nd Street, 13th Floor, New York, NY 10036, USA (http://www.ansi.org/).

Copyright The Institute of Electrical and Electronics Engineers, Inc.
Provided by IHS under license with IEEE
No reproduction or networking permitted without license from IHS
Not for Resale

ANSI C84.1-1995, American National Standard for Electrical Power Systems and Equipment—Voltage Ratings (60 Hertz).

ANSI C92.1-1982, American National Standard for Power Systems—Insulation Coordination

ANSI C92.2-1987, American National Standard Preferred Voltage Ratings for Alternating-Current Electrical Systems and Equipment Operating at Voltages above 230 kV Nominal.[2]

IEEE Std 4-1995, IEEE Standard Techniques for High-Voltage Testing.[3]

IEEE Std 32-1972 (Reaff 1997), IEEE Standard Requirements, Terminology, and Test Procedures for Neutral Grounding Devices.

IEEE Std 315-1975 (Reaff 1993), IEEE Standard Graphic Symbols for Electrical and Electronics Diagrams (Including Reference Designation Letters).

IEEE Std 315A-1986 (Reaff 1993), IEEE Standard Supplement to Graphic Symbols for Electrical and Electronics Diagrams.

IEEE Std 1158-1991 (Reaff 1996), IEEE Recommended Practice for Determination of Power Losses in High-Voltage Direct-Current (HVDC) Converter Stations.

IEEE Std C57.12.00-1993, IEEE Standard General Requirements for Liquid-Immersed Distribution, Power, and Regulating Transformers.

IEEE Std C57.12.11-1980, IEEE Guide for Installation of Oil-Immersed Transformers (10 MVA and Larger, 69 kV to 287 kV Rating).[4]

IEEE Std C57.12.12-1980, IEEE Guide for Installation of Oil-Immersed Extra-High-Voltage Transformers 345 kV and Above.[5]

IEEE Std C57.12.80-1978 (Reaff 1992), IEEE Standard Terminology for Power and Distribution Transformers.

IEEE Std C57.12.90-1993, IEEE Standard Test Code for Liquid Immersed Distribution, Power, and Regulating Transformers and IEEE Guide for Short Circuit Testing of Distribution and Power Transformers.

IEEE Std C57.19.00-1991 (Reaff 1997), IEEE Standard General Requirements and Test Procedures for Outdoor Power Apparatus Bushings.

IEEE Std C57.19.01-1991 (Reaff 1997), IEEE Standard Performance Characteristics and Dimensions for Outdoor Apparatus Bushings.

IEEE Std C57.19.03-1996, IEEE Standard Requirements, Terminology, and Test Coding for Bushings for DC Applications.

---

[2]ANSI C92.2-1987 has been superseded by IEEE Std 1312-1993 (Reaff 1999), IEEE Standard Preferred Voltage Ratings for Alternating-Current Electrical Systems and Equipment Operating at Voltages Above 230 kV Nominal. Footnote 3 provides information on obtaining IEEE publications.

[3]IEEE publications are available from the Institute of Electrical and Electronics Engineers, 445 Hoes Lane, P.O. Box 1331, Piscataway, NJ 08855-1331, USA (http://standards.ieee.org/).

[4]IEEE Std C57.12.11-1980 has been withdrawn; however, copies can be obtained from Global Engineering, 15 Inverness Way East, Englewood, CO 80112-5704, USA, tel. +1 303 792 2181 (http://global.ihs.com/).

[5]IEEE Std C57.12.12-1980 has been withdrawn; however, copies can be obtained from Global Engineering, 15 Inverness Way East, Englewood, CO 80112-5704, USA, tel. +1 303 792 2181 (http://global.ihs.com/).

Copyright © 2000 IEEE. All rights reserved.

--`,,`,,`-`-`,,`,,`,`,,`---

Copyright The Institute of Electrical and Electronics Engineers, Inc.
Provided by IHS under license with IEEE
No reproduction or networking permitted without license from IHS Not for Resale

IEEE Std C57.92-1981 (Reaff 1991), IEEE Guide for Loading Mineral-Oil-Immersed Power Transformers (up to and including 100 MVA with 55 °C or 65 °C Winding Rise).[6]

IEEE Std C57.98-1993 (Reaff 1999), IEEE Guide for Transformer Impulse Tests.

IEEE Std C57.104-1991, IEEE Guide for the Interpretation of Gases Generated in Oil-Immersed Transformers.

IEEE Std C57.106-1991 (Reaff 1998), IEEE Guide for Acceptance and Maintenance of Insulating Oil in Equipment.

IEEE Std C57.109-1993, IEEE Guide for Liquid-Immersed Transformer Through-Fault-Current Duration.

IEEE Std C57.110-1986 (Reaff 1992), IEEE Recommended Practice for Establishing Transformer Capability When Supplying Nonsinusoidal Load Currents.

IEEE Std C57.113-1991, IEEE Guide for Partial Discharge Measurement in Liquid-Filled Power Transformers and Shunt Reactors.

IEEE Std C62.1-1989 (Reaff 1994), IEEE Standard for Gapped Silicon-Carbide Surge Arresters for AC Power Circuits.

IEEE Std C62.2-1987 (Reaff 1994), IEEE Guide for the Application of Gapped Silicon-Carbide Surge Arresters for Alternating Current Systems.

IEEE Std C62.11-1993, IEEE Standard for Metal-Oxide Surge Arresters for Alternating Current Power Circuits.

IEEE Std C62.22-1991, IEEE Guide for the Application of Metal-Oxide Surge Arresters for Alternating-Current Systems.

3. Definitions

Standard transformer terminology available in IEEE Std C57.12.80-1978[7] shall apply. Other electrical terms are defined in The IEEE Standard Dictionary of Electrical and Electronics Terms [B8].[8]

4. Letter symbols

$E_{\text{ACapplied}}$	ac applied voltage for transformer test [dc-side winding(s)]
E_d	maximum dc rated voltage per valve bridge (= $E_{\text{DCSystem}} / N_{\text{tot}}$)
E_{DC}	applied voltage for transformer test
E_{DCSystem}	maximum dc rated voltage of system
E_{PR}	polarity reversal voltage for transformer test
E_{VO}	maximum phase-to-phase ac operating voltage of valve winding of converter transformer
F_h	loss adjustment factor at harmonic h

[6]IEEE Std C57.92-1981 has been withdrawn; however, copies can be obtained from Global Engineering, 15 Inverness Way East, Englewood, CO 80112-5704, USA, tel. +1 303 792 2181 (http://global.ihs.com/).

[7]Information on references can be found in Clause 2.

[8]The numbers in brackets correspond to those of the bibliography in Annex C.

Copyright © 2000 IEEE. All rights reserved.

Copyright The Institute of Electrical and Electronics Engineers, Inc.
Provided by IHS under license with IEEE
No reproduction or networking permitted without license from IHS
Not for Resale

h	harmonic number
I	root-mean-square (rms) value of the actual nonsinusoidal full load current
I_h	magnitude of harmonic current, per unit of rated nameplate current
R	dc resistance
N	number of six-pulse bridges in series from the dc neutral of the converter station to the converter bridge connected to the subject transformer
N_{tot}	total number of six-pulse bridges in series from the dc neutral of the converter station to the dc line terminal (usually $N_{tot} = 2$)
P_0	I^2R (ohmic) losses at rated current
P_h	total load loss at harmonic h
P_{CL}	total no-load loss
P_{LLG}	load loss used in determining guaranteed total losses
P_{LLT}	calculated total load loss under service conditions
P_{TL}	total loss under service conditions (used for temperature rise test)
P_{we}	eddy losses in winding at fundamental frequency
P_{se}	stray losses in structural parts at fundamental frequency
w	per unit eddy losses in windings divided by total stray and eddy losses (all losses at fundamental frequency)

5. General requirements—systems and environmental data

5.1 Usual service conditions

5.1.1 General

Converter transformers conforming to this standard shall be suitable for operation at rated kilovoltamperes under the usual service conditions defined in IEEE Std C57.12.00-1993 except where clearly not applicable to converter transformers, or when otherwise specified in this standard.

5.1.2 Temperature

For parts such as the dc-side bushings that project into a valve hall, ambient temperatures exceeding 40 °C shall not be regarded as a usual service condition.

5.1.3 AC system voltage

The voltage applied to the ac-side winding shall be approximately sinusiodal (e.g., maximum total harmonic distortion of 3–5% with no individual harmonic exceeding 1%), and the phase voltages supplying a polyphase transformer shall be approximately equal in magnitude and time displacement. In addition, the maximum continuous ac operating voltage for the ac-side windings of converter transformers shall not exceed the levels specified in ANSI C84.1-1995.

5.1.4 Load current

The currents flowing into converter transformers are rich in harmonics. The system designer shall provide the harmonic content in the winding(s) to the manufacturer, and also provide the magnitude of the residual dc current in the dc-side winding(s).

Copyright © 2000 IEEE. All rights reserved.

Copyright The Institute of Electrical and Electronics Engineers, Inc.
Provided by IHS under license with IEEE
No reproduction or networking permitted without license from IHS Not for Resale

5.1.5 Direction of power flow

Unless otherwise specified, converter transformers shall be designed for both rectifier and inverter operation.

5.2 Loading at other than rated conditions

Loading above the nameplate is not a normal part of converter transformer loading. Converter transformers are normally designed for a specific dc terminal and are coordinated with the capabilities of the valves and other dc components.

If the terminal is to be operated above rated capacity, a detailed thermal study is needed to determine the capability of all the affected terminal equipment. Detailed information about the transformer design and capabilities at both fundamental and harmonic currents should be part of the study.

5.3 Unusual service conditions

Conditions other than those described in 5.1 are considered unusual and should be brought to the attention of those responsible for the design and application of the apparatus.

5.3.1 Unusual temperature conditions

Loading over the full range of ambient temperatures at a given terminal should be part of the transformer design study. Standard tables should not be used for converter transformers because of the effects of harmonic currents and the dc bias on the valve winding(s).

5.3.2 Unusual altitude conditions

The dielectric strength, which depends in whole or in part on air for insulation, decreases as the altitude increases due to the effect of decreased air density. When specified, converter transformers shall be designed with larger air spacings using the correction factors presented in Table 1 of IEEE Std C57.12.00-1993 to obtain adequate air dielectric strength at altitudes above 1000 m (3300 ft).

5.3.3 Other unusual service conditions

Unusual service conditions are described in 4.3.3 of IEEE Std C57.12.00-1993. Note that for converter transformers pollution aspects are extremely important and shall be accurately defined so that proper external insulation (particularly bushings) may be provided. In addition to the factors listed in IEEE Std C57.12.00-1993, dc currents caused by geomagnetic storms are considered as unusual service conditions.

6. Rating data

6.1 Cooling classes of converter transformers

Cooling classes of converter transformers are defined in 5.1 of IEEE Std C57.12.00-1993.

6.2 Frequency

Unless otherwise specified, converter transformers shall be designed for operation at a primary frequency (first harmonic) of either 50 Hz or 60 Hz.

Copyright © 2000 IEEE. All rights reserved.

Copyright The Institute of Electrical and Electronics Engineers, Inc.
Provided by IHS under license with IEEE
No reproduction or networking permitted without license from IHS Not for Resale

6.3 Phases

Converter transformers are either single phase or three phase.

6.4 Rated kilovoltamperes

The rated kilovoltamperes shall be the output that can be delivered continuously or for the time to be specified by the end user at rated secondary voltage and at rated frequency for the converter transformer.

6.5 Rated current

The rated current is the rms equivalent of the actual operating current waveshape based on the dc rated load commutated with a zero commutating angle. In a document published by CIGRÉ JWG 12/14.10 [B3], it was noted “that in power transformers terminology the fundamental ratings are rated power and rated voltage, while rated current is derived from the other two quantities, so as to prevent numerical discrepancy. Rated power is frequently a rounded figure, while rated current is not.”

6.6 Voltage ratings and taps for converter transformers

The voltage ratings and taps for converter transformers are defined in 5.5 of IEEE Std C57.12.00-1993.

6.7 Connections

Standard connections for converter transformers are presented in Figure 1.

NOTE—Converter transformers are not recommended for parallel operation.

6.8 Polarity, angular displacement, and terminal markings for converter transformers

Polarity, angular displacement, and transformer connections used with 12-pulse bridge converter terminal markings for converter transformers are described in 5.7 of IEEE Std C57.12.00-1993.

6.9 Impedance

The impedance for converter transformers shall be referred to a temperature equal to the sum of the rated average winding temperature rise by resistance, plus 20 °C. The resistance shall be given for the rated winding temperature rise plus 20 °C.

6.10 Total losses

The total losses of converter transformers shall be the sum of the no-load losses and the load losses.

No-load losses are measured separately in a manner similar to conventional ac transformers.

The determination of actual load losses in service is more complicated due to harmonic effects. Guaranteed losses are normally measured using the sinusoidal rated transformer current.

A harmonic correction is added to the measured sinusoidal load losses as part of the calculation of the appropriate total loss value for the temperature rise test (see 9.6.2.2).

Copyright © 2000 IEEE. All rights reserved.

--`,,`-`-`,,`,,`,`,,`---

Copyright The Institute of Electrical and Electronics Engineers, Inc.
Provided by IHS under license with IEEE
No reproduction or networking permitted without license from IHS Not for Resale

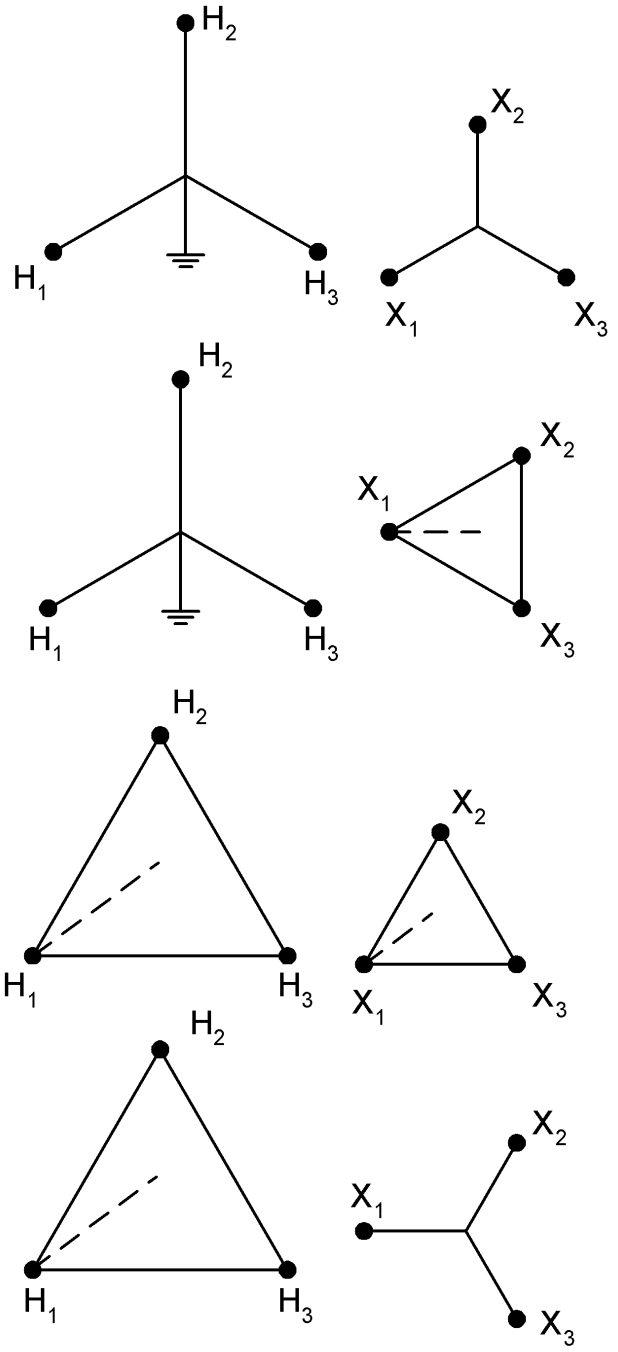

Figure 1a—Transformer connections used with six-pulse bridge converter

Copyright © 2000 IEEE. All rights reserved.

Copyright The Institute of Electrical and Electronics Engineers, Inc.
Provided by IHS under license with IEEE
No reproduction or networking permitted without license from IHS
Not for Resale

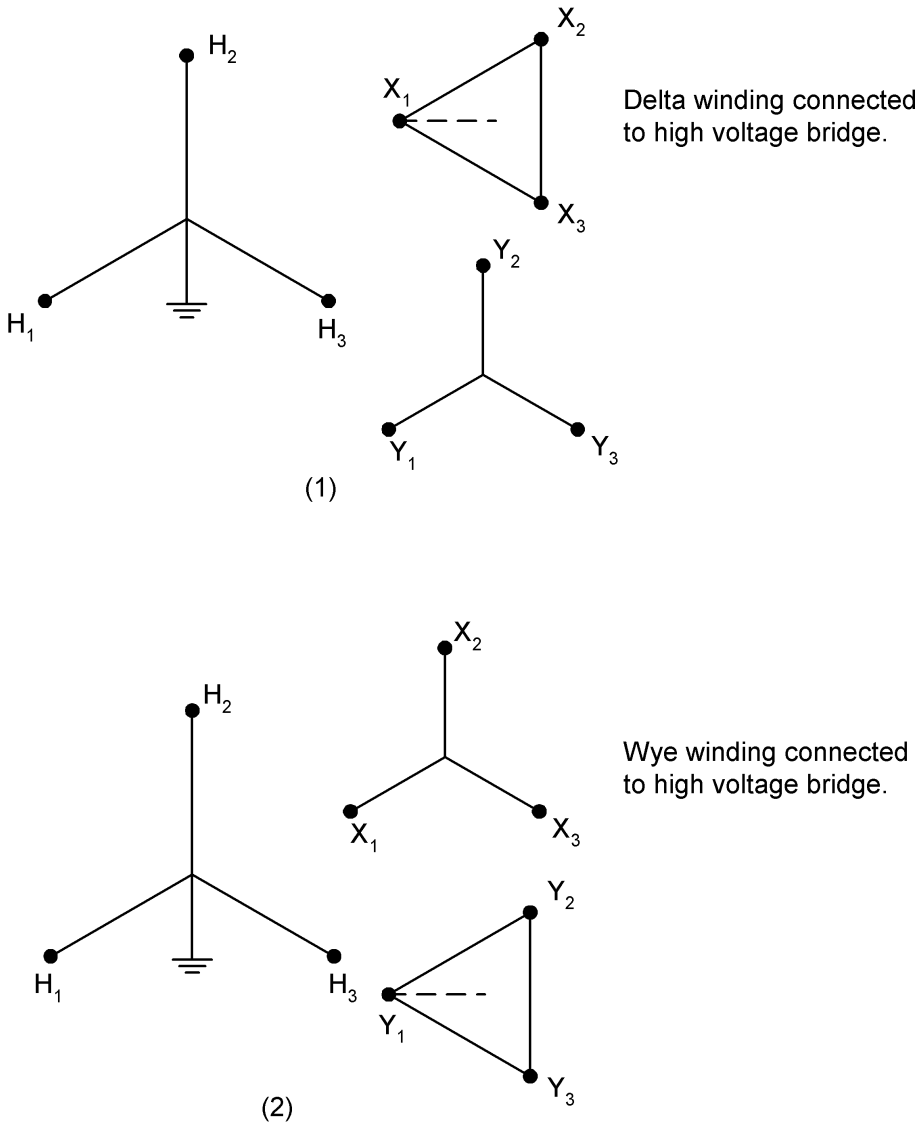

Figure 1b—Transformer connections used with 12-pulse bridge converter

Copyright © 2000 IEEE. All rights reserved.

Copyright The Institute of Electrical and Electronics Engineers, Inc.
Provided by IHS under license with IEEE
No reproduction or networking permitted without license from IHS
Not for Resale

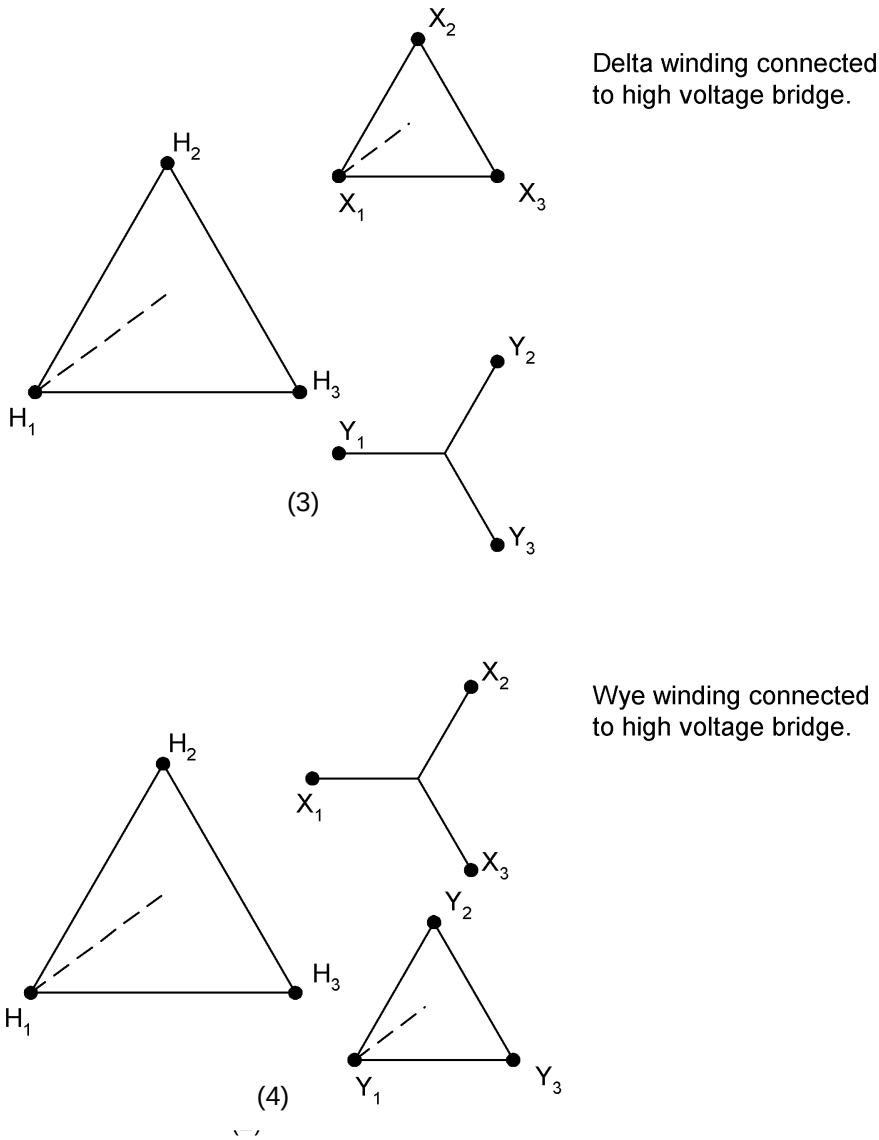

Figure 1b—Transformer connections used with 12-pulse bridge converter *(continued)*

Copyright © 2000 IEEE. All rights reserved.

Copyright The Institute of Electrical and Electronics Engineers, Inc.
Provided by IHS under license with IEEE
No reproduction or networking permitted without license from IHS
Not for Resale

Power required for cooling fans, oil pumps, space heaters, and other ancillary equipment is not included in the total loss. When specified, loss data on such ancillary equipment shall be furnished.

The standard reference temperature for the load loss of converter transformers shall be 85 °C.

6.11 Insulation levels

6.11.1 AC-side winding

The insulation levels for the ac-side terminals, windings, and neutral are defined in 5.10 of ANSI C57.12.10-1993. The converter transformer is to be considered as a Class II power transformer.

6.11.2 DC-side winding(s)

For the dc-side winding(s) basic lightning impulse insulation levels (BIL) shall be specified for each terminal to ground and across the winding(s). A BIL can be specified across the winding(s) that is different from that specified for each terminal to ground, depending on system studies. The system designer shall provide an adequate margin for overvoltage protection levels for each case. The chopped-wave insulation level shall be determined by multiplying the BIL insulation level by 1.10.

The dc-side winding(s) shall also be designed for the switching impulse insulation level (SIL). An SIL shall be specified for each terminal to ground and across the winding(s). A different SIL can be specified across the winding(s) than for each terminal to ground depending on system studies. The system designer shall provide adequate margin for overvoltage protection level for each case.

When an SIL is specified across a winding of a converter transformer, it might not be possible to verify this insulation level with design tests. In fact, the turns ratio(s) of the windings may produce an induced switching impulse voltage on the other winding(s) that is higher than the rated SIL assigned for those winding(s). In such a case, insulation design calculations shall be provided by the manufacturer.

Because of the wide tap changer range on converter transformers, extra insulation may be necessary on the dc side if switching impulse testing on the extreme ac-side taps are required. This results in extra cost for the converter transformer without any added benefit under service conditions. Switching impulse testing should only be required using the ac-side tap that results in dc-side stress closest to the rated dc-side switching surge level. The worst case for this condition is a low-voltage ac side and a high-voltage dc side (i.e., 230 kV ac system and 500 kV dc system).

The dc-side winding(s) of a converter transformer shall also be designed to withstand stresses resulting from dc applied tests, polarity reversal tests, and ac applied tests. It is recommended that the dc applied test and the polarity reversal tests be separate tests and not be combined into one continuous test.

6.11.3 Coordination of insulation levels

The BIL chosen for each line terminal shall be such that the lightning impulse, chopped-wave impulse, and the switching impulse insulation levels include a suitable margin in excess of the dielectric stresses to which the line terminals will be subjected in actual service. For information on surge arrester characteristics and application, see IEEE Std C62.1-1989, IEEE Std C62.2-1987, IEEE Std C62.11-1993, and IEEE Std C62.22-1991.

6.11.4 Grounding considerations for converter transformers

Refer to 5.10.3.3 in IEEE Std C57.12.00-1993.

 Copyright © 2000 IEEE. All rights reserved.

Copyright The Institute of Electrical and Electronics Engineers, Inc.
Provided by IHS under license with IEEE
No reproduction or networking permitted without license from IHS Not for Resale

6.11.5 Impulse tests

6.11.5.1 Lightning impulse tests

When required, lightning impulse tests shall include reduced full-wave, chopped-wave, and full-wave tests. Lightning impulse tests shall not be made on windings that do not have terminals brought out through the tank or cover. The lightning impulse test procedure is defined in 10.3 of IEEE Std C57.12.90-1993.

6.11.5.2 Switching impulse tests

When required, switching impulse tests shall be performed on the ac-side terminals as described in 5.10.7.2 of IEEE Std C57.12.00-1993. When required, the dc-side winding(s) shall be subjected to switching impulse tests to ground. When feasible, the dc-side winding(s) shall also be subjected to switching impulse tests across the winding(s) (see 6.11.2).

The switching impulse test procedure is defined in 10.2 of IEEE Std C57.12.90-1993.

6.11.6 DC applied voltage tests with partial discharge measurements

These tests shall be applied to the terminals of the dc-side winding(s). The test voltage shall be given by

$$E_{\mathrm{DC}} = 1.5[(N - 0.5)E_d + 0.7\ E_{\mathrm{vo}}] \quad (1)$$

Refer to Clause 4 for a list of the symbols. The voltage shall be applied for a minimum of 120 min, but may be extended up to a maximum of 150 min as discussed in 9.7.4.4. Positive polarity shall be used.

6.11.7 DC polarity reversal test with partial discharge measurements

This test shall be applied to the terminals of the dc-side winding(s). The test voltage is:

$$(E_{\mathrm{PR}} = 1.25[(N - 0.5)E_d + 0.35E_{\mathrm{vo}}]) \quad (2)$$

Refer to Clause 4 for a list of the symbols. A double reversal test shall be used as shown in Figure 2. The duration of the first two voltages is 90 min each, while the duration of the last voltage is 45 min. The reversal should be accomplished without delay and as quickly as possible. It must be performed within 2 min.

Grounding during reversal shall be limited to the minimum time required by the test set.

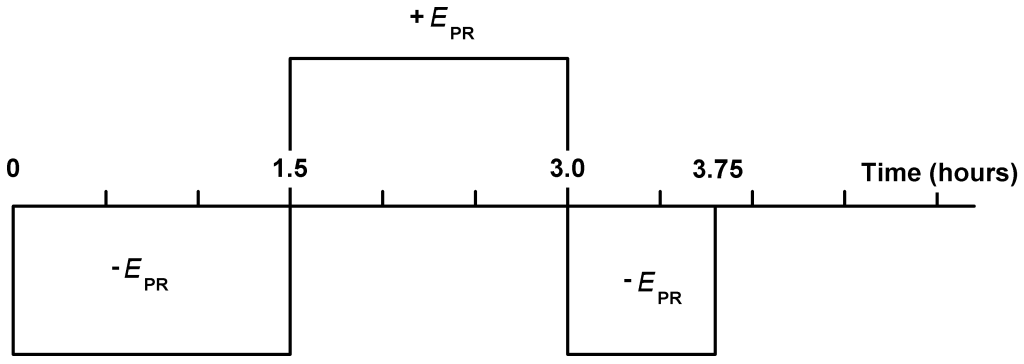

Figure 2—DC polarity reversal test

Copyright © 2000 IEEE. All rights reserved.

Copyright The Institute of Electrical and Electronics Engineers, Inc.
Provided by IHS under license with IEEE
No reproduction or networking permitted without license from IHS
Not for Resale

6.11.8 Low-frequency voltage tests on line terminals

6.11.8.1 Induced voltage test with partial discharge measurements

With the transformer connected and excited as it will be in service, an induced voltage test shall be performed as described in IEEE Std C57.12.00-1993, based on the voltage levels of the ac-side winding.

6.11.8.2 AC applied voltage test for ac-side winding

The ac-side terminals shall receive an ac applied test as shown in Table 5 of IEEE Std C57.12.00-1993.

6.11.8.3 AC applied voltage test with partial discharge measurements for dc-side winding(s)

All terminals of all dc-side windings shall receive an ac applied-voltage test with partial discharge measurements. The duration of the dc-side ac applied voltage test is 60 min. Refer to Clause 4 for a list of the symbols. The test level is given by

$$E_{\mathrm{ACapplied}} = \frac{1.5[(N-0.5)E_d + \sqrt{2} \times E_{\mathrm{vo}} / \sqrt{3}]}{\sqrt{2}} \quad (3)$$

6.12 Temperature rise and loading conditions

Temperature rise and loading conditions are described in 5.11 of IEEE Std C57.12.00-1993. Note that for converter transformers the effects of harmonic currents shall be considered in determining the operating temperature of the windings and other metallic parts (see 9.6 and Annex A).

6.13 Loss capitalization rates

Both load and no-load capitalization rates should be provided by the system designer to allow the supplier to optimize the design of the converter transformer to the application.

6.14 Sound level limits

Sound level limits, if required, shall be specified by the system designer. Because sound levels achieved under actual service conditions will typically be higher than that demonstrated during factory testing due to harmonics, the system engineer shall specify if the limit is the final in-service requirement or the test level. (Factory tests are performed with sinusoidal 50 Hz or 60 Hz voltage and current waveforms.)

6.15 Auxiliary power supply voltage

The auxiliary power supply voltage for the converter transformer controls shall be determined by the end user unless otherwise specified.

Copyright © 2000 IEEE. All rights reserved.

Copyright The Institute of Electrical and Electronics Engineers, Inc.
Provided by IHS under license with IEEE
No reproduction or networking permitted without license from IHS Not for Resale

7. Construction

7.1 General

The rapid replacement of converter transformers or components is often a requirement in HVDC installations and provisions shall be provided.

7.2 Tank and component design

Refer to Clause 6 of IEEE Std C57.12.00-1993.

7.3 Oil preservation

Oil preservation for converter transformers is discussed in 6.6 of IEEE Std C57.12.00-1993. The appropriate quality of the oil, particularly oil resistivity and particle count, that is required for initial commissioning and continued safe operation shall be specified by the manufacturer.

7.4 Auxiliary equipment

7.4.1 Bushings

Refer to 6.1 of IEEE Std C57.12.00-1993.

7.4.2 Bushing current transformers

Refer to 6.2 of IEEE Std C57.12.00-1993.

7.4.3 Surge arresters

The following types of construction are available for surge protection:

a) Provision only for the mounting of surge arresters.

b) Mounting complete with surge arrester.

c) Surge arrester ground pad consisting of a tank-grounding pad (in accordance with 6.7 of IEEE Std C57.12.00-1993) mounted near the top of the tank. This may be specified for each set of arresters except where the separation of the arrester stack is such that individual pads for grounding each phase arrester represent a better design. In such cases, individual ground pads may be supplied.

NOTE—Material for connecting surge arresters to live parts and to ground pads is not included in 7.4.3 a) through c).

7.4.4 Accessories

The following accessories shall be provided. They are described in 7.4.4.1– 7.4.4.6.

— Liquid-level indicator
— Liquid temperature indicator
— Temperature and liquid-level indicator alarm contacts
— Pressure-vacuum gauge
— Pressure-relief device
— Nameplate

Copyright © 2000 IEEE. All rights reserved.

Copyright The Institute of Electrical and Electronics Engineers, Inc.
Provided by IHS under license with IEEE
No reproduction or networking permitted without license from IHS
Not for Resale

7.4.4.1 Liquid-level indicator

A liquid-level indicator shall be mounded so as to readable to a person standing at base level. Dial markings shall show 25 °C level and the minimum and maximum levels. The words “Liquid Level” shall be shown on the face of the dial or on a suitable nameplate adjacent to the indicator.

7.4.4.2 Liquid temperature indicator

A dial-type thermometer shall be mounted on the side of the tank. The temperature indicator shall have resetable maximum temperature limits with corresponding contacts. The thermometer shall be either a direct-stem-mounted unit or a temperature-sensing unit for remote eye-level indication. Either unit shall be mounded in a closed well located at a suitable level to indicate the top-oil temperature. For the dimensions of the well, see Figure 3

The dial markings shall cover a minimum range of 0 °C to 120 °C. The words “Liquid Temperature” shall be shown on the dial or on a suitable nameplate mounted adjacent to the indicator.

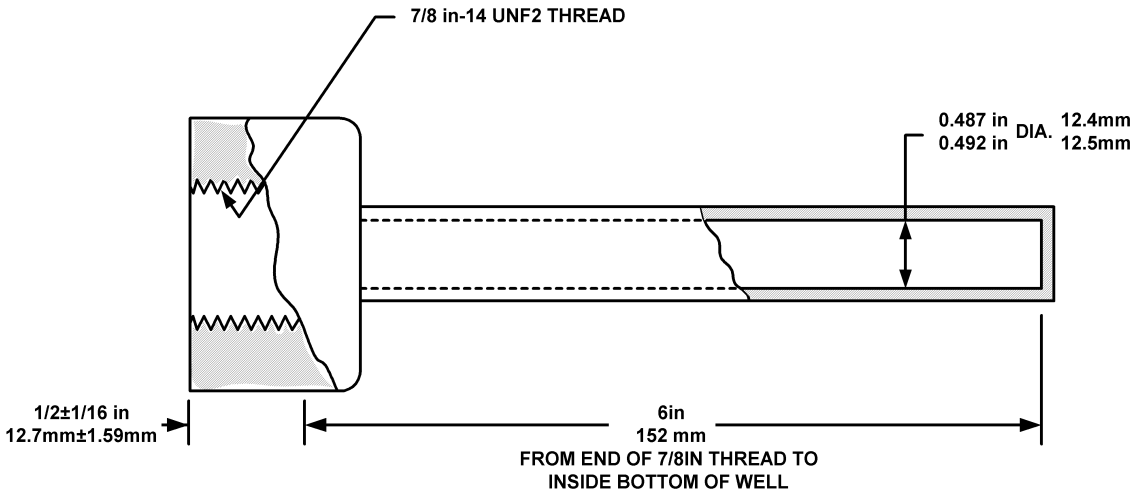

Figure 3—Dimensions of thermometer well

7.4.4.3 Temperature and liquid-level indicator alarm contacts

7.4.4.3.1 Alarm contacts

Nongrounded alarm contacts for liquid-level indicators and temperature indicators shall be suitable for interrupting the following:

a) 0.02 A direct-current inductive load.
b) 0.20 A direct-current noninductive load.
c) 2.5 A alternating-current noninductive or inductive load.
d) 250 V maximum in all cases.

The liquid-level indicator alarm contacts shall be nonadjustable and shall be set to close at the minimum safe operating level of the liquid. The liquid temperature indicator alarm contacts shall be adjustable over a range of 65 °C to 110 °C. The winding-temperature indicator alarm contacts shall be adjustable over a range of 95 °C to 125 °C.

Copyright © 2000 IEEE. All rights reserved.

Copyright The Institute of Electrical and Electronics Engineers, Inc.
Provided by IHS under license with IEEE
No reproduction or networking permitted without license from IHS Not for Resale

7.4.4.4 Pressure-Vacuum gauge

A pressure-vacuum gauge shall be provided for converter transformers of sealed-tank and gas-oil-sealed construction.

7.4.4.5 Pressure relief device

A pressure relief device shall be provided on the converter transformer cover.

7.4.4.6 Nameplate

The nameplate shall contain the words “Converter Transformer.” In addition, the full-wave BIL, in kilovolts, of line terminals shall be designated as in the following example:

ac-side winding	1050 BIL
ac-side winding neutral	110 BIL
dc-side winding to ground	825 BIL
dc-side across winding	450 BIL

Refer to 5.12 of IEEE Std C57.12.00-1993 for all other nameplate information.

8. Tests

8.1 General

Unless otherwise specified, tests shall be made at the factory or in a test laboratory prior to delivery.

8.2 Routine, design, and other tests

Routine, design, and other tests are listed in Table 1. Definitions of these tests are included in Clause 2 or in IEEE Std C57.12.80-1978.

Routine tests shall be made on all converter transformers in accordance with the requirements of Table 1.

Design tests shall be made on one converter transformer of a given multiple-unit order in accordance with the requirements of Table 1.

Other tests shall be made on converter transformers as shown in Table 1, if required, on either one or all transformers of a multiple-unit order as specified by the end user.

Copyright © 2000 IEEE. All rights reserved.

Copyright The Institute of Electrical and Electronics Engineers, Inc.
Provided by IHS under license with IEEE
No reproduction or networking permitted without license from IHS Not for Resale

Table 1—Routine, design, and other tests

Tests	Routine	Design	Other
Resistance measurements	X (Note 1)[a]		
Ratio	X (Note 2)		
Polarity and phase relation	X (Note 3)		
No-load losses	X (Note 4)		
Excitation current	X (Note 4)		
Impedance	X (Note 1)		
Load loss	X (Note 1)		
Zero-phase-sequence impedance voltage			X
Temperature rise		X (Notes 5, 6)	
Dielectric tests			
Impulse tests			
Full and chopped wave	X		
Switching impulse	X		
Polarity reversal	X		
DC voltage	X		
Low frequency			
Applied voltage ac-side winding	X		
Applied voltage dc-side winding	X		
Induced voltage	X		
Insulation power factor	X		
Insulation resistance	X		
Audible sound level		X (Note 7)	
Short-circuit capability		X (Note 8)	
Mechanical			
Lifting and moving devices		X	
Pressure	X		
Leak	X		

[a]Notes follow Table 1.

Copyright © 2000 IEEE. All rights reserved.

Copyright The Institute of Electrical and Electronics Engineers, Inc.
Provided by IHS under license with IEEE
No reproduction or networking permitted without license from IHS
Not for Resale

NOTES FOR TABLE 1:

1—Performed on all windings on the rated voltage tap and at the tap extremes for all units. This measurement should be performed on all taps for at least one unit of a particular order.

2—Performed on the rated voltage connection and on all tap connections. For load tap changer (LTC) units, see 8.3.1 of IEEE Std C57.12.00-1993.

3—Tested at the rated voltage connection.

4—At rated voltage and frequency on the rated voltage connection.

5—Performed at the tap giving the highest load losses.

6—May be omitted if a test on an identical unit is available.

7—The transformer shall be connected for, and energized at, rated voltage and frequency and at no load. Suitable allowance shall be made and mutually agreed on for the harmonic contribution in service. Noise-contributing elements of the transformer such as pumps and fans shall be operated as appropriate for the rating being tested. When it is impractical or undesirable to include the appropriate cooling equipment, the self-cooled sound level may be corrected for cooling noise contribution, if suitable corrections are available and it is mutually agreeable to those concerned.

8—Testing of large transformers may not be practical because of test facility power limitations. In this case, theoretical calculations may be supplied.

8.3 Additional routine tests for converter transformers with load tap changing or regulating transformers

Refer to 8.3 of IEEE Std C57.12.00-1993.

9. Test code

9.1 General

This subclause prescribes methods for performing the tests specified in Clause 8. Although the figures in this standard show conventional meters, adequate digital readout measuring devices and digital sampling techniques with computer calculations are considered as satisfactory alternatives and may actually be preferred as mentioned in the text.

9.2 Resistance measurements

Refer to Clause 5 of IEEE Std C57.12.00-1993.

9.3 Polarity and phase-relation tests

Refer to Clause 6 of IEEE Std C57.12.00-1993.

9.4 Ratio tests

Refer to Clause 7 of IEEE Std C57.12.00-1993.

9.5 No-Load losses and excitation current

Refer to Clause 8 of IEEE Std C57.12.00-1993.

Copyright © 2000 IEEE. All rights reserved.

Copyright The Institute of Electrical and Electronics Engineers, Inc.
Provided by IHS under license with IEEE
No reproduction or networking permitted without license from IHS Not for Resale

9.6 Impedance and load losses

9.6.1 General

Load losses are those losses in a converter transformer that are incidental to the carrying of a load.

For converter transformers the load loss is dependent on the magnitude and wave form of the current flowing in the winding(s). Involved calculations are necessary to accurately include the effects of the harmonic currents. However, it is generally accepted that for converter transformer tests made with sine wave currents having the same RMS value as the expected rectangular current waves, together with calculations based thereon, permit load losses to be obtained that are accurate within sufficient limits.

NOTE—Load losses include I^2R losses in the winding(s) due to load current, stray loss due to stray flux in the winding(s), core clamps, magnetic shields, tank walls, etc., and stray loss due to circulating current, if any, in parallel windings.

9.6.2 Tests and calculations for converter transformers

9.6.2.1 Impedance test

Refer to Clause 9 of IEEE Std C57.12.00-1993 for measurement of converter transformer impedances.

9.6.2.2 Load losses

The procedure for determining load losses of a converter transformer is as follows:

a) Measure all winding resistances and correct to 85 °C.

b) Calculate rated equivalent sinusoidal current at rated frequency.

$$I = \sqrt{\left[\sum_{h=1}^{49} (I_h)^2\right]} \tag{4}$$

where

I is the RMS equivalent value of the actual nonsinusoidal full-load current
I_h is the current of harmonic h

c) With dc-side winding(s) shorted, test for load loss using the rated equivalent sinusoidal current, calculate I^2R (ohmic) and stray loss components, and correct loss values to 85 °C as described in 9.4 of IEEE Std C57.12.00-1993. This is P_{LLG}, the load loss to be used in determining the guaranteed total loss.

d) Measure the harmonic losses at harmonics 1 through 49. Correct all loss values to 85 °C. Calculate loss adjustment factors at each harmonic frequency.

$$F_h = \frac{P_h}{P_1} \tag{5}$$

where

h is the harmonic number
P_h is the measured load loss at harmonic h
P_1 is the measured load loss at fundamental frequency, either 50 Hz or 60 Hz.

Copyright © 2000 IEEE. All rights reserved.

Copyright The Institute of Electrical and Electronics Engineers, Inc.
Provided by IHS under license with IEEE
No reproduction or networking permitted without license from IHS Not for Resale

The values for the loss adjustment factors can vary considerably from one design to another. For the purpose of tender, the manufacturer may use values of F_h determined by calculation or by measurements obtained from previous designs, but it is necessary to measure the actual loss adjustment factors on the first unit of each order to determine the load losses for the temperature rise test. Measurement procedures for F_h and calculation formulae are described in Annex A.

e) The total load losses are given by

$$P_{LLT} = P_1 \times \sum_{h=1}^{49} [(I_h/I)^2 \times F_h] \quad (6)$$

The total loss to be used for the temperature rise test is given by

$$P_{TL} = P_{LLT} + P_{CL} \quad (7)$$

where

P_{TL} is the total loss
P_{LLT} is the total load loss from Equation (6)
P_{CL} is the no-load loss

9.7 Dielectric tests

9.7.1 General

The purpose of dielectric tests is to demonstrate that the converter transformer has been designed and constructed to withstand the specified insulation levels.

9.7.1.1 Test requirements

The levels and other test parameters shall be as outlined in Clause 6 and Clause 7, or otherwise specified.

9.7.1.2 Measurement of test voltages

Measurement of test voltages shall be as described in 10.1.3 of IEEE Std C57.12.90-1993.

9.7.1.3 Factory dielectric tests

9.7.1.3.1 Test sequence

The dielectric tests shall be performed after the load loss test and the temperature rise test (if applicable). The induced voltage test with partial discharge measurements shall be the last dielectric test performed on the converter transformer.

9.7.1.3.2 Ambient temperature

All routine dielectric tests, except the dc applied voltage test, should be made at temperatures assumed under normal operations or at the temperatures attained under the conditions of routine tests. For the dc applied voltage test, the temperature of the oil shall be between 10 °C and 30 °C.

Copyright © 2000 IEEE. All rights reserved.

Copyright The Institute of Electrical and Electronics Engineers, Inc.
Provided by IHS under license with IEEE
No reproduction or networking permitted without license from IHS
Not for Resale

9.7.1.3.3 Assembly

Transformers, including bushings and terminal compartments when necessary to verify air clearances, shall be assembled prior to making dielectric tests, but assembly of items that do not affect dielectric tests, such as radiators and cabinets, is not necessary. Bushings shall, unless otherwise authorized by the end user, be those supplied with the transformer.

9.7.1.3.4 Converter transformers for connection to gas-insulated equipment

During dielectric testing of transformers for direct connection to gas-insulated substations, testing with the in-service bushings is preferred, but substitute air-oil bushings may be used unless otherwise specified by the end user. Live-part clearances and locations of the substitute bushings inside the transformer shall be identical, within normal manufacturing tolerances, to those of the in-service bushings. When the required internal clearances, or external air clearances, or both, cannot be achieved, suitable arrangements are required as determined by the manufacturer and end user in advance of the design of the transformer.

9.7.1.4 Tests on bushings

IEEE Std C57.19.03-1996 shall be used for separate tests on the dc bushings for the converter transformer, and IEEE Std C57.19.00-1993 shall be used for the ac-side bushings.

Details of separate testing of bushings for use on converter transformers connected to gas-insulated equipment shall be agreed upon by the manufacturer and the end user prior to the design of the converter transformer.

9.7.1.5 Dielectric tests in the field

Field dielectric tests may be warranted on the basis of detection of combustible gas or other circumstances. However, periodic dielectric tests are not recommended because of the severe stress imposed on the insulation.

9.7.1.5.1 AC tests in the field

When low-frequency applied-voltage and induced-voltage tests are required, the line-to-ground or line-to-line voltage stress imposed shall not exceed 150% of the maximum system operating voltage. The duration of the test shall not exceed the limits shown in Table 2.

Table 2—Test duration limits

Test voltage as a percentage of maximum system operating voltage	Allowable duration (min)
150%	5
140%	12
130%	36
120%	120

Copyright © 2000 IEEE. All rights reserved.

Copyright The Institute of Electrical and Electronics Engineers, Inc.
Provided by IHS under license with IEEE
No reproduction or networking permitted without license from IHS Not for Resale

The test frequency, when inducing a converter transformer in excess of its rated voltage, shall be increased as necessary to avoid core saturation. Guidance in this area is provided in 10.6.2 of IEEE Std C57.12.90-1993.

9.7.1.5.2 DC tests in the field

The dc applied test on the dc-side winding(s) shall not exceed 80% of the factory dc applied test voltage given in Equation (1). The duration of the test shall be at least 30 min, but not exceed 60 min.

9.7.2 Lighting impulse test procedures

The tests on the ac-side winding(s) shall be applied to each terminal, one at a time. For the dc-side winding(s), two types of tests shall be performed. For the first condition, each end of the winding shall be impulsed with the other grounded. The nominal full-wave impulse voltage level for this test shall be the BIL across the winding as specified in Clause 6. For the second type of impulse test, both ends of the winding are connected together and they are tested simultaneously to ground. The nominal full-wave impulse voltage level for this test is the BIL to ground and is also specified in Clause 6. For a winding(s) having the same BIL insulation level to ground as across the winding, only the first series of tests is necessary.

When impulse testing the dc-side winding of a converter transformer, all other terminals shall be solidly grounded. For impulse tests on the ac-side winding of the converter transformer (line terminals and/or neutral) refer to 10.3.2.1 of IEEE Std C57.12.90-1993.

The actual test procedure (number of tests, definition of waveshape, failure detection, tap connections, etc.) is discussed in 10.3 of IEEE Std C57.12.90-1993.

9.7.3 Switching impulse test procedures

For the ac-side winding(s), the switching impulse test shall consist of applying or inducing a switching impulse wave between each ac-side line terminal and ground with a crest value equal to the specified test level. For the dc-side winding(s), the applied switching impulse is accomplished by connecting together the ends of the winding and applying the switching impulse wave between the winding and ground. The induced switching impulse, if used, is applied in a similar fashion to the ac-side test, but is subject to the restraints discussed in 6.11.2.

The actual test procedure (number of tests, definition of waveshape, failure detection, tap connections, etc.) is discussed in 10.2 of IEEE Std C57.12.90-1993.

9.7.4 DC applied voltage test with partial discharge measurement

9.7.4.1 Polarity

Positive dc polarity shall be used.

9.7.4.2 Terminals not being tested

All terminals not being tested shall be solidly grounded.

9.7.4.3 Test procedure

Preconditioning of the converter transformer insulation structure at a lower dc voltage is not permitted prior to the dc applied test. Pumps (if used) should not be running during the test. For the dc applied test, the voltage shall be brought up to full value in not more than 1 min and held for the respective specified period of time, after which the voltage shall be reduced to zero in not more than 1 min.

Copyright © 2000 IEEE. All rights reserved.

Copyright The Institute of Electrical and Electronics Engineers, Inc.
Provided by IHS under license with IEEE
No reproduction or networking permitted without license from IHS Not for Resale

CAUTION: After a dc voltage test is complete, the insulation structure retains a considerable electrical charge. For safety reasons, all terminals should be grounded after the dc tests for a period of time of at least four times the length of the test period.

9.7.4.4 Failure detection

Failure may be indicated by the presence of smoke and bubbles rising in the oil, an audible sound such as a thump, or a sudden increase in test current. Any such indication shall be carefully investigated by observation, by repeating the test, or by other tests to determine if a failure has occurred.

Partial discharge measurements shall be performed throughout the entire dc applied voltage test. In terms of interpreting the partial discharge measurements, the results shall be considered acceptable and no further partial discharge tests required when during the last 30 min of the test no more than 30 pulses > 2000 pC are noted, with no more than 10 pulses in the last 10 min period. If the number of pulses exceeds 30 during the last 30 min, or 10 pulses in the last 10 min, of the initial 120 min period, the test may be extended by another 30 min period. There shall be only one 30 min extension, and the transformer shall be accepted when the number of pulses in such a 30 min period is no more than 30, with no more than 10 pulses in the last 10 min.

When no breakdown occurs, and unless very high partial discharges are sustained for a long time, the test is regarded as nondestructive. A failure to meet the partial discharge criteria shall therefore not warrant immediate rejection but lead to consultation between end user and manufacturer about further investigation.

It is recommended that the applied dc voltage test be conducted with ultrasonic transducers installed on the converter transformer tank. Those transducers may help to distinguish internal discharges from external discharges.

9.7.5 Polarity reversal test with partial discharge measurements

9.7.5.1 Terminals not being tested

All terminals not being tested shall be solidly grounded.

9.7.5.2 Test procedure

Pumps (if used) should not be running during the polarity reversal test. Preconditioning of the converter transformer insulation structure at a lower dc voltage is not permitted prior to the polarity reversal test. The voltage shall be increased to the full polarity reversal test level (negative polarity) within 1 min. When the entire polarity reversal sequence is complete the voltage shall be returned to zero within 1 min.

CAUTION: Although the voltage levels are lower for the polarity reversal test than the dc applied voltage test, substantial electrical charge can remain on the insulation structure within the transformer. For safety reasons, all bushings should be grounded after the polarity reversal test for a period of time.

9.7.5.3 Failure detection

Failure may be indicated by the presence of smoke and bubbles rising in the oil, an audible sound such as a thump, a sudden increase in test current, or the inability of the power supply to maintain a dc voltage.

Partial discharges shall be measured throughout the entire polarity reversal test. In terms of interpreting the partial discharge measurements, the results shall be considered acceptable and no further polarity reversal tests required, when during the first 30 min following the completion of each reversal no more than 30 pulses > 2000 pC are noted, with no more than 10 pulses > 2000 pC occurring in the last 10 min of that 30 min. The completion of the reversal is defined as the time when the voltage has reached its 100% test value.

 Copyright © 2000 IEEE. All rights reserved.

Copyright The Institute of Electrical and Electronics Engineers, Inc.
Provided by IHS under license with IEEE
No reproduction or networking permitted without license from IHS Not for Resale

When no breakdown occurs, and unless a very high number of partial discharge pulses exceeding 2000 pC are detected and sustained for a long time, the test is considered nondestructive. A failure to meet the partial discharge criteria shall therefore not warrant immediate rejection, but lead to consultation between end user and manufacturer about further investigation.

It is recommended that the polarity reversal test be conducted with ultrasonic transducers installed on the converter transformer tank. Those transducers may help to distinguish internal sources from external sources.

9.7.6 Low-frequency tests

9.7.6.1 Induced test

Converter transformers receive an induced test as described for Class II power transformers in 10.1.4 and 10.8 of IEEE Std C57.12.90-1993.

It is recommended, prior to the induced test, to energize the transformer at 1.10 × nominal voltage and at nominal frequency for 3–6 h to remove the remaining dc trapped charges produced by previous dc tests. Those dc trapped charges may give random high-level (> 1000 pC) discharge pulses associated with acoustic detection during the induced test. Grounding the windings for a long period (24 h) may not be sufficient to remove the dc trapped charges.

Attention should be given to high-level (> 2000 pC) discharge pulses during induced test. When those pulses are associated with acoustic emission, the discharge source is internal. In addition to the partial discharge requirements described in 10.7.5 of IEEE Std C57.12.90-1993, the results shall be considered acceptable and no further induced test required when the partial discharge level is less than 500 pC and the rate of high-level discharge pulses (> 2000 pC) is less than or equal to one pulse per minute.

If the number of high-level discharge pulses exceeds the acceptable limit, the transformer shall be subject to another preconditioning ac period (as described in the previous paragraph) and the induced test shall be repeated.

9.7.6.2 AC applied test on ac-side winding(s)

Converter transformers receive an applied test on the ac-side winding(s) as described in 10.6 of IEEE Std C57.12.90-1993.

9.7.6.3 AC applied test on dc-side winding(s)

9.7.6.3.1 Duration, frequency, and connection

The converter transformer shall receive an additional applied test on the dc-side winding(s). A normal power frequency of 50 Hz or 60 Hz shall be used. The winding being tested shall have all its parts joined together and connected to the line terminal of the testing transformer. All other terminals and parts (including core and tank) shall be connected to ground and to the other terminal of the testing transformer.

9.7.6.3.2 Relief gap

A relief gap set at a voltage 10% or more in excess of the specified test voltage may be connected during the applied voltage test.

Copyright © 2000 IEEE. All rights reserved.

Copyright The Institute of Electrical and Electronics Engineers, Inc.
Provided by IHS under license with IEEE
No reproduction or networking permitted without license from IHS Not for Resale

9.7.6.3.3 Application of test voltage

The voltage shall be started at one quarter or less of the full voltage and be brought up gradually to full value in not more than 15 s. After being held for the time specified, it shall be reduced gradually (in not more than 5 s) to one quarter or less of the maximum value and the circuit opened.

9.7.6.3.4 Failure detection

Careful attention shall be maintained for evidence of possible failure that could include an indication of smoke and bubbles rising in the oil, an audible sound such as a thump, or a sudden increase in test circuit current. Any such indication shall be carefully investigated by observation, by repeating the test, or by other tests to determine if a failure has occurred.

The maximum level of partial discharges during the ac applied test shall be 500 pC or 100 μV.

9.7.7 Partial discharge measurement

9.7.7.1 Partial discharge measurements for induced tests

Techniques for performing partial discharge measurements as part of the induced test for converter transformers are described in IEEE Std C57.113-1991, while general principles are covered in ANSI C68.3-1976 [B1] and IEC 60076-3 (2000-03) [B4], Appendix A and 10.9 of IEEE Std C57.12.90-1993.

9.7.7.2 Partial discharge measurements for dc voltage and polarity reversal tests

Apparent charge measurements are used for the investigation of partial discharges during the dc voltage and polarity reversal tests. Partial discharges under pure direct voltage occur in the form of large single pulses at random intervals. For the purpose of these tests a pulse is defined as a partial discharge with an apparent charge of 2000 pC or higher according to IEC 60270 (1981-01) [B5]. The IEEE Transformers Committee will be working on a guide for detecting partial discharges during dc tests on converter transformers; until it is available measuring circuits and detailed test procedures for ac tests which may be applied as far as applicable for these dc tests are described in IEEE Std C57.113-1991, while general principles are covered in Appendix A of ANSI C68.3-1976 [B1] and in IEC 60076-3 (2000-01) [B4].

9.7.8 Insulation power-factor tests

Insulation power factor procedures for tests are described in 10.10 of IEEE Std C57.12.90-1993.

9.7.9 Insulation resistance tests

Insulation resistance tests shall be made on converter transformers to determine the insulation resistance from individual windings to ground or between individual windings.

Tests shall be performed as described in 10.10 of IEEE Std C57.12.90-1993.

9.8 Temperature rise

Refer to Clause 11 of IEEE Std C57.12.90-1993 for basic temperature rise calculations and procedures. The total load losses and the total losses that are used in IEEE Std C57.12.90-1993 shall be increased to include the effect of harmonic losses. Refer to 9.6.2.2, Equation (6), for total load loss calculations. Even with these corrections, it should be noted that the temperature rise test may not produce the same hot spot rise as in normal service since the extra losses due to harmonic currents are mainly concentrated at the extreme ends of the windings, while the correction factor applied during the test will generate extra losses uniformly along

Copyright © 2000 IEEE. All rights reserved.

--`,,`-`-`,,`,,`,`,,`---
Copyright The Institute of Electrical and Electronics Engineers, Inc.
Provided by IHS under license with IEEE
No reproduction or networking permitted without license from IHS Not for Resale

the winding. As a result, the hot spot generated during the test may be less than that developed in normal converter operation.

NOTE—A number of new power testing concepts and methodologies for converter transformers are under discussion within the framework of CIGRÉ and IEC. Testing developments under consideration for converter transformers include "load current test," "extended heat run with overload," and "overload test." Such tests continue to be under evaluation and a definitive consensus has not been reached within the HVDC community. Therefore, a brief summary of the proposed test concepts and methodologies is offered in Annex B.

9.9 Short circuit test

Refer to Clause 12 of IEEE Std C57.12.90-1993.

9.10 Audible sound test

Refer to Clause 13 of IEEE Std C57.12.90-1993.

10. Tolerances

10.1 Tolerance on ratio

For tolerance on ratio refer to IEEE Std C57.12.90-1993.

10.2 Tolerance on impedance

The tolerance on impedance shall be as follows:

a) The impedance of a two-winding converter transformer shall have a tolerance of 5% of the specified value on the rated position and on either the minimum or maximum tap position. Differences of impedance between duplicate two-winding converter transformers when two or more units of a given rating are produced by one manufacturer at the same time shall not exceed 5% of the specified value on the rated position and on either the minimum or maximum tap position.

b) The impedance of a converter transformer having three or more windings shall have a tolerance of 5% of the specified value on the rated position and on either the extreme minimum or maximum tap position.

   Differences of impedance between duplicate three-winding converter transformers, when two or more units of a given rating are produced by one manufacturer at the same time, shall not exceed 5% of the specified value on the rated position and on either the minimum or maximum tap position.

10.3 Tolerance on losses

A tolerance on losses is utilized for two purposes. One is for commercial evaluation, and the other is to provide the basis for a quality check.

10.3.1 Tolerance on losses for commercial evaluation

As energy costs increase, losses become a more significant component of total operating costs and, as such, may be capitalized by the end user. Therefore, compliance to guaranteed losses becomes part of the commercial contract. A tolerance on losses to account for measurement tolerances, etc., may be part of the

Copyright © 2000 IEEE. All rights reserved.

Copyright The Institute of Electrical and Electronics Engineers, Inc.
Provided by IHS under license with IEEE
No reproduction or networking permitted without license from IHS Not for Resale

contractual agreement. Additionally, the contract may specify such guarantee criteria as maximum losses per unit, average loss for all units, total “package” losses, etc. In any case this is purely a commercial matter between end user and manufacturer.

The only warning that should be stressed is that if a unit exceeds guaranteed loss, aside from the commercial implications that are a matter between manufacturer and end user, it is essential to demonstrate that allowable temperature rise limits that ensure a normal service life are not exceeded.

10.3.2 Tolerances on losses as the basis of a quality check

Unless otherwise specified, the losses represented by a test of a converter transformer on a given order shall not exceed the specified losses by more than 10% for no-load losses and 6% for total losses.

If one or more of the units exceed these tolerances, the manufacturer shall initiate an investigation to find the cause of this deviation. For acceptance to be considered, the manufacturer shall demonstrate to the end user, by either calculation and/or test, that the deviation will not impair the ability of the unit to meet the other requirements of this standard, particularly the temperature rise limits.

Copyright © 2000 IEEE. All rights reserved.

--`,,`-`-`,,`,,`,`,,`---

Copyright The Institute of Electrical and Electronics Engineers, Inc.
Provided by IHS under license with IEEE
No reproduction or networking permitted without license from IHS Not for Resale

Annex A

(informative)

Determination of loss adjustment factors

A.1 Measurement procedures for determination of loss adjustment factors

Note that because of the relatively low values of harmonic current, the measurements can be regarded as linear, thereby permitting reduced currents to be used at higher frequencies.

A.2 Measurement of single-phase converter transformers

(The following description of test measurement is based on information presented by JWG 12/14.10 [B3].)

The measuring circuit is shown in Figure A.1. A conventional signal generator may be used to supply a power amplifier, which feeds the converter transformer through an impedance matching circuit. Capacitors are used in parallel with the converter transformer and are sized for each test frequency to provide a tuned circuit at that frequency.

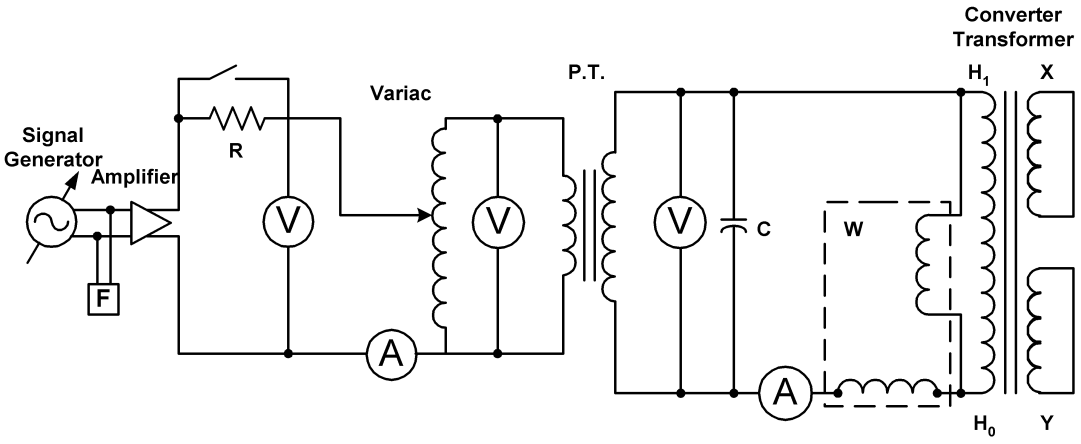

KEY:

A - Ammeter
C - Capacitors, varied as required from 0.075 μf min. to 260 μf max.
F - Frequency Counter
R - 2 ohm Protective Resistor
V - Voltmeter
W - Wattmeter

Figure A.1—Measuring circuit for single-phase transformers

The limits of current and voltage for the measurement are set by the current rating of the amplifier and by the voltage limit of the wattmeter. Typical values are 7–10 A and 300 V. A voltage divider can be used to increase the voltage limit to approximately 600 V.

Copyright © 2000 IEEE. All rights reserved.

Copyright The Institute of Electrical and Electronics Engineers, Inc.
Provided by IHS under license with IEEE
No reproduction or networking permitted without license from IHS
Not for Resale

Once resonance has been established at a desired frequency, the variable transformer is used to adjust the current in the converter transformer to the maximum possible value. Note that because of voltage limitations of the wattmeter, these currents will be reduced at higher frequencies. Three current measurements should be taken at each frequency. A typical curve of loss vs. the square of the current is shown in Figure A.2. For each harmonic frequency h the value of the loss adjustment factor (multiplier) F_h is calculated by taking the ratio of loss at the harmonic frequencies compared to the fundamental frequency loss.

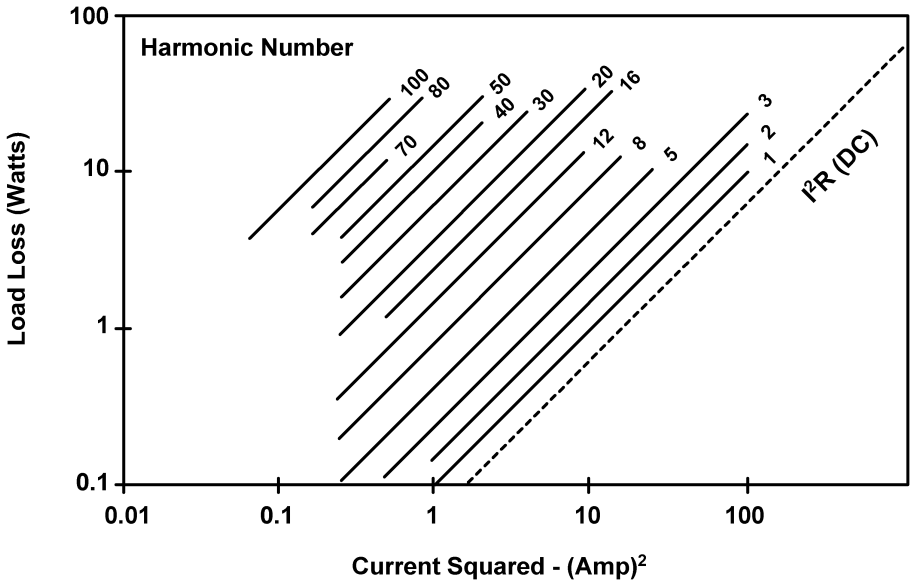

Figure A.2—Load loss vs. current squared

A.3 Measurement of three-phase converter transformers

(The following information is based on material presented in Ram et al. [B7].)

The measurement techniques for three-phase converter transformers are similar to those described in A.2 for single-phase transformers, except that a three-phase oscillator, three-phase variable transformer, and three separate amplifiers are required. The circuit used for the measurement is shown in Figure A.3.

Loss adjustment factors can be more difficult to measure for three-phase units because of current limitations in the power supplies, and it may not be possible to obtain readings at the higher harmonics. It is permissible to extrapolate from the frequencies measured as shown in Figure A.4 (which is based on information presented in Ram et al.[B7]).

A.4 Calculation of loss adjustment factors

Stray losses in a transformer have two components:

a) Eddy losses within the winding.
b) Stray losses from the clamps, tank, and other structural members.

These losses are frequency dependent, and vary with a different exponent of the harmonic number.

Copyright © 2000 IEEE. All rights reserved.

Copyright The Institute of Electrical and Electronics Engineers, Inc.
Provided by IHS under license with IEEE
No reproduction or networking permitted without license from IHS Not for Resale

The loss adjustment factor may be written as

$$F_h = \frac{P_1 - P_0}{P_1}[wh^q + (1-w)h^r] + \frac{P_0}{P_1}$$

where

F_h is the loss adjustment factor at harmonic h
P_1 is the total load loss at rated current at fundamental frequency
P_0 is the I^2R_{DC} (ohmic) losses at rated current
h is the harmonic number
w is $P_{we}/ (P_{we} + P_{se})$
P_{we} is the eddy loss in windings at fundamental frequency
P_{se} is the stray loss in structural parts at fundamental frequency

The exponents q and r are functions of the transformer design. They may be determined from the frequency measurements from the actual transformer described in A.1. Recent work by an IEC working group (WG 21 of TC14) proposed values of $q = 2$ and $r = 0.8$, which may be used if other data is not available.

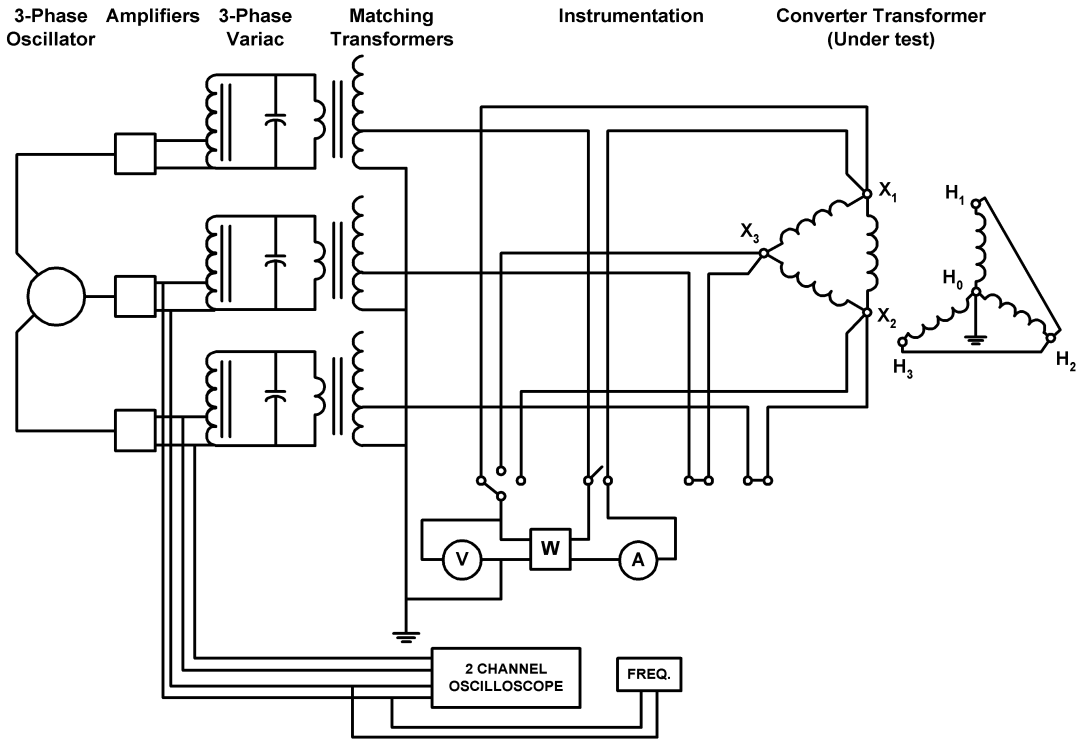

Figure A.3—Three-phase test connection

Copyright © 2000 IEEE. All rights reserved.

Copyright The Institute of Electrical and Electronics Engineers, Inc.
Provided by IHS under license with IEEE
No reproduction or networking permitted without license from IHS
Not for Resale

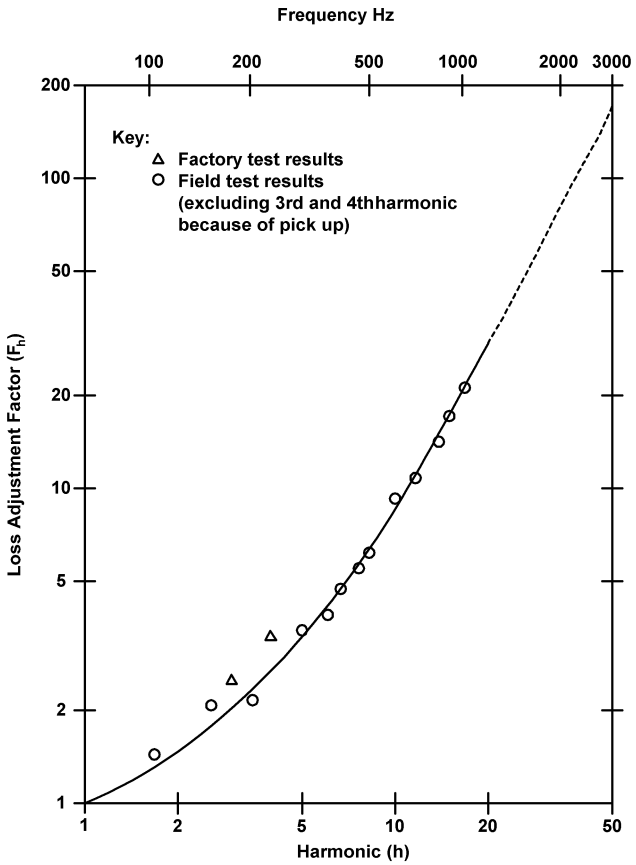

Figure A.4 Loss adjustment factor F_h vs. harmonic number

Copyright © 2000 IEEE. All rights reserved.

Copyright The Institute of Electrical and Electronics Engineers, Inc.
Provided by IHS under license with IEEE
No reproduction or networking permitted without license from IHS
Not for Resale

Annex B

(informative)

Power testing concepts and methodologies under consideration

During preparation of this standard, CIGRÉ JTF 12/14.10-01, which was tasked to evaluate the in-service performance of converter transformers and oil-immersed smoothing reactors, recommended a "Routine—Extended Heat-Run Test With Overload."

The proposed additional test was described as follows:

> "Overcurrent heat-run test with extended duration in lieu of the conventional 1.0 pu test to verify the thermal integrity of the active parts including joints, connections…An alternative is an extended 1.0 pu heat run test with an overcurrent enhancement after thermal stabilization. Gas-in-oil measurements are to be made before, during and after the test."

Therefore, if requested by the purchaser, consideration can be given to subjecting the converter transformer to an extended duration overcurrent heat-run "other" test. If the overcurrent heat-run "other" test is performed, a standard temperature rise design test may not be required. The purpose of this test is to verify the integrity of internal connections. The test is to be performed with a 50 Hz or 60 Hz current sufficient to generate total losses (fundamental plus harmonic, and including core) at 105% of rated load. The duration shall be a minimum of 12 h and can be commenced at the end of the temperature-rise-type test. If a temperature-rise-type test is not performed on the subject converter transformer prior to the overcurrent test, the transformer top oil temperature should be stabilized at the 100% rated load level before the 12 h overcurrent test is initiated. As a primary diagnostic tool, chromatic analysis of dissolved gas-in-oil shall be performed before the overcurrent test, at a maximum four hour intervals during the overcurrent test, and after the overcurrent test. Since the purpose of the overcurrent heat-run is to detect possible broken connections in the windings and on the leads, it is not necessary to achieve a stable top oil temperature at the end of the 12 h minimum time period. After 12 h, the temperature of the line, valve, or tertiary winding should be measured as a possible additional diagnostic tool. This should be the winding of hottest temperature determined from the temperature-rise-type test. If required, the winding temperature may be corrected for the additional core loss and, if appropriate, tertiary loss added to the measured winding. Temperature rises will be higher than those at rated current (load), and are to be defined for the extended duration overcurrent heat-run "other test." The corrected winding temperature (average and hot spot) shall not be higher than those defined and agreed to by the purchaser and manufacturer. If the transformer has an overload rating specified, the test should be performed considering the characteristics of the maximum summer time-ambient overload specified. (Low ambient temperature overloads, when applied at normal test lab ambient conditions, can result in excessive temperatures for the converter transformer insulation system.) If an order includes transformer units with different ratings, the test is to be applied, at least, to one unit of each rating.

IEC TC14 is addressing the issue of a power test on all converter transformers of an order. IEC TC14 has recognized that there is a need for a test to demonstrate the full load current capability of converter transformers not subjected to a temperature rise type test. This concept has been accepted by IEC TC14 and it has been included in the second draft of IEC DIS 61378-2 [B6], which is under development. It will be in the form of a special test (equivalent to the IEEE "other" test) called "load current test." If a temperature rise test is performed, the "load current test" is not required. Although details are under discussion, the essentials of the "load current test" are that the test is to be carried out at a 50 Hz or 60 Hz current (sufficient to generate total rated in service losses) for a duration of not less than 12 h. The test will also include a chromatographic analysis of dissolved gas in oil. Based on agreement between purchaser and manufacturer, the "load current test" is performed on converter transformers of an order not subjected to a temperature-rise-type test. IEC DIS 61378-2 [B6] is in draft stage, and discussions of this test continue.

Copyright © 2000 IEEE. All rights reserved.

Copyright The Institute of Electrical and Electronics Engineers, Inc.
Provided by IHS under license with IEEE
No reproduction or networking permitted without license from IHS
Not for Resale

Loading of converter transformers at other than rated current is a normal part of converter transformer operating practice for many HVDC projects. Converter transformers are normally designed for a specific dc terminal and are coordinated with the design of the valves. Examples of typical overloads include:

— Low ambient temperature overload
— Emergency overload
— Monopolar operation following the loss of one pole
— Continuous overload with redundant coolers (if available)
— 1 h or 2 h overload
— Temporary overload for a duration of minutes or seconds

Therefore, based on agreement between purchaser and manufacturer, consideration can be given to including in the performance of the temperature rise design test a verification of the overload condition. This can be done by extending the duration of the standard temperature rise test to include the overload condition. Testing should take into consideration that overloads are sometimes based on the use of redundant coolers, the characteristics of the maximum summertime-ambient specified, and overloads based on low ambient temperature. Care must be taken to ensure hot spot temperature limits for the insulation system are not exceeded, especially in the case of overloads based on low ambient temperature. This is critical based on the fact that, in general, normal test laboratory ambient temperatures are in the range of 10 °C to 40 °C.

Copyright © 2000 IEEE. All rights reserved.

Copyright The Institute of Electrical and Electronics Engineers, Inc.
Provided by IHS under license with IEEE
No reproduction or networking permitted without license from IHS Not for Resale

Annex C

(informative)

Bibliography

[B1] ANSI C68.3-1976, American National Standard Recommended Practice for the Detection and Measurement of Partial Discharges (Corona) During Dielectric Tests.

[B2] Forrest, J. Alan C., "Harmonic Load Losses in HVDC Converter Transformers" *IEEE Transactions on Power Delivery*, vol. 6, no. 1, Jan. 1991, pp. 153–157.

[B3] HVDC Converter Transformer Specifications – A Review of Specification Content, a report by CIGRÉ JWG 12/14.10, *ELECTRA*, No. 141, Apr. 1992, pp. 35–49. [9]

[B4] IEC 60076-3 (2000-03), Power Transformers—Part 3: Insulation Levels, Dielectric Tests, and External Clearances in Air.

[B5] IEC 60270 (1981-01), Partial Discharge Measurements.

[B6] IEC DIS 61378-2 (CVD), Transformers for Static Converters—Part 2: Transformers for HVDC Applications (Draft).

[B7] Ram, B.S. et al. "Effect of Harmonics on Converter Transformer Load Losses," *IEEE Transactions on Power Delivery*, vol. 3, no. 3, July 1988, pp. 1059–1066.

[B8] The IEEE Standard Dictionary of Electrical and Electronics Terms, Sixth Edition.

[9]CIGRÉ publications are available from CIGRÉ Central Office, 3-5 rue de Metz, F-75015 Paris, France.

Copyright © 2000 IEEE. All rights reserved.

Copyright The Institute of Electrical and Electronics Engineers, Inc.
Provided by IHS under license with IEEE
No reproduction or networking permitted without license from IHS Not for Resale