*Recognized as an*
*American National Standard (ANSI)*

**IEEE C57.125™-1991 (R2005)**

# IEEE Guide for Failure Investigation, Documentation, and Analysis for Power Transformers and Shunt Reactors

Sponsor

**Transformers Committee**
of the
**IEEE Power Engineering Society**

Reaffirmed 10 May 2005
Approved 27 June 1991

**IEEE-SA Standards Board**

Approved 20 November 1991

**American National Standards Institute**

**Abstract:** A procedure to be used to perform a failure analysis is recommended. The procedure is primarily focused on power transformers used on electric utility systems, although it may be used for an investigation into any ac transformer failure. This document provides a methodology by which the most probable cause of any particular transformer failure may be determined. This document is also intended to encourage the establishment of routine and uniform data collection procedures, consistency of nomenclature and compatibility with similar efforts by other organizations, and co-operative efforts by users and manufacturers during the failure analysis.

**Keywords:** Diagnostic tests, electrical tests, failure analysis.

---

The Institute of Electrical and Electronics Engineers, Inc.
3 Park Avenue, New York, NY 10016-5997, USA

Copyright © 1992 by the Institute of Electrical and Electronics Engineers, Inc.
All rights reserved. Published 1992. Printed in the United States of America.

IEEE is a registered trademark in the U.S. Patent & Trademark Office, owned by the Institute of Electrical and Electronics Engineers, Incorporated.

ISBN 1-55937-160-9

*No part of this publication may be reproduced in any form, in an electronic retrieval system or otherwise, without the prior written permission of the publisher.*

Copyright The Institute of Electrical and Electronics Engineers, Inc.
Provided by IHS under license with IEEE
No reproduction or networking permitted without license from IHS

Not for Resale

**IEEE Standards** documents are developed within the Technical Committees of the IEEE Societies and the Standards Coordinating Committees of the IEEE Standards Board. Members of the committees serve voluntarily and without compensation. They are not necessarily members of the Institute. The standards developed within IEEE represent a consensus of the broad expertise on the subject within the Institute as well as those activities outside of IEEE that have expressed an interest in participating in the development of the standard.

Use of an IEEE Standard is wholly voluntary. The existence of an IEEE Standard does not imply that there are no other ways to produce, test, measure, purchase, market, or provide other goods and services related to the scope of the IEEE Standard. Furthermore, the viewpoint expressed at the time a standard is approved and issued is subject to change brought about through developments in the state of the art and comments received from users of the standard. Every IEEE Standard is subjected to review at least every five years for revision or reaffirmation. When a document is more than five years old and has not been reaffirmed, it is reasonable to conclude that its contents, although still of some value, do not wholly reflect the present state of the art. Users are cautioned to check to determine that they have the latest edition of any IEEE Standard.

Comments for revision of IEEE Standards are welcome from any interested party, regardless of membership affiliation with IEEE. Suggestions for changes in documents should be in the form of a proposed change of text, together with appropriate supporting comments.

Interpretations: Occasionally questions may arise regarding the meaning of portions of standards as they relate to specific applications. When the need for interpretations is brought to the attention of IEEE, the Institute will initiate action to prepare appropriate responses. Since IEEE Standards represent a consensus of all concerned interests, it is important to ensure that any interpretation has also received the concurrence of a balance of interests. For this reason IEEE and the members of its technical committees are not able to provide an instant response to interpretation requests except in those cases where the matter has previously received formal consideration.

Comments on standards and requests for interpretations should be addressed to:

Secretary, IEEE Standards Board
445 Hoes Lane
P.O. Box 1331
Piscataway, NJ 08855-1331
USA

IEEE Standards documents are adopted by the Institute of Electrical and Electronics Engineers without regard to whether their adoption may involve patents on articles, materials, or processes. Such adoption does not assume any liability to any patent owner, nor does it assume any obligation whatever to parties adopting the standards documents.

Copyright The Institute of Electrical and Electronics Engineers, Inc.
Provided by IHS under license with IEEE
No reproduction or networking permitted without license from IHS
Not for Resale

# Foreword

(This foreword is not a part of IEEE C57.125-1991, IEEE Guide for Failure Investigation, Documentation, and Analysis for Power Transformers and Shunt Reactors.)

In 1974, the Transformer Reliability Working Group was formed to develop a guide for reporting failure data for power transformers and shunt reactors. In the early years, considerable time and effort was spent on developing definitions necessary to establish the ground rules for doing power transformer reliability work. The reliability guide attempted to establish rules so that all parties would be working with the same definitions and parameters. Prior to this work, each organization established its own criteria for definitions, reporting failure data, establishing the requirements by which meaningful data could be collected, and generating failure statistics. Two important issues emerged: (1) establishing the requirements by which meaningful data could be collected, and (2) bringing together the efforts of user and manufacturer within the confines of confidentiality. The joint effort between user and manufacturer has not been approached previously and holds a promise for future development. Work has also been completed by the statisticians on system reliability; however, detailed work in component reliability (such as power transformers) has not been addressed in sufficient detail to generate statistics. Another area explored by the Transformer Reliability Working Group was the joint effort required by all parties to use common language and establish cooperation.

As work progressed, it became obvious that much work and effort was required to ensure that adequate failure investigations are conducted when transformers fail. Questions regarding this subject led to many more unanswered questions. As a result, a proposal was issued to establish a Transformer Failure Analysis Working Group, which would be responsible for the preparation of a document that would assist the failure investigation work.

Many papers have been written and many conferences have been held regarding reliability, availability, and maintainability of transformers. Between the Transformer Reliability Working Group and the Transformer Failure Analysis Working Group, issues will be explored, and the efforts will perhaps answer some of the unanswered questions. It is only a start regarding transformer reliability and transformer failure investigation. Many areas in the life history of a transformer need further definition, exploration, documentation, and clarification.

At the time that this standard was approved, the Transformer Failure Analysis Working Group had the following membership:

**D. J. Cash,** *Chair*

**W. B. Binder, Jr.,** *Secretary*

D. J. Allan
M. S. Altman
A. Bartek
P. L. Bellaschi
J. J. Bergeron
W. E. Boettger
A. Canoris
O. Compton
D. W. Crofts
L. Dix
D. H. Douglas
C. G. Evans
J. Fleeman
S. L. Foster
J. P. Gibeault
D. A. Gillies
J. W. Grimes
K. R. Heighton
P. J. Hoefler
C. R. Hoesel
R. I. Jamps, Jr.
D. L. Johnson
R. P. Johnston
L. Jump
K. Kampshoff
J. G. Lackey
W. F. Lampe
H. F. Light
J. D. Marlow
J. W. Matthews
M. I. Mittelman
C. L. Moore
C. Murray
Y. I. Musa
S. K. Oklu
B. K. Patel
D. C. Payne
C. T. Raymond
G. J. Reitter
C. A. Robbins
V. I. Thennappan
N. Tirlea
T. P. Traub
D. E. Truax
L. B. Wagenaar
T. L. Walters
R. J. Whearty
F. E. Willet
D. A. Yannucci
F. N. Young

Copyright The Institute of Electrical and Electronics Engineers, Inc.
Provided by IHS under license with IEEE
No reproduction or networking permitted without license from IHS
Not for Resale

The chair of the Transformer Failure Analysis Working Group established the following task force to produce various sections of this guide:

**W. B. Binder, Jr.,** Chair

M. S. Altman
D. J. Cash
L. Dix
D. H. Douglas
C. R. Hoesel
D. L. Dix
R. P. Johnston
J. D. Marlow
H. F. Light
M. I. Mitelman
C. T. Raymond
R. J. Whearty
F. N. Young

At the time that it balloted and approved this standard for submission to the IEEE Standards Board, the Transformers Committee of the IEEE Power Engineering Society had the following membership:

D. J. Allan
B. F. Allen
R. Allustiarti
M. S. Altman
E. H. Arjeski
J. C. Arnold
J. Aubin
R. Bancroft
D. A. Barnard
D. Basel
P. L. Bellaschi
W. B. Binder
J. V. Bonucchi
J. D. Borst
C. V. Brown
D. J. Cash
O. R. Compton
F. W. Cook
J. Corkran
D. W. Crofts
J. N. Davis
D. H. Douglas
R. F. Dudley
J. C. Dutton
J. A. Ebert
D. J. Fallon
H. G. Fischer
M. Frydman
R. E. Gearhart
D. W. Gerlach
D. A. Gillies
R. S. Girgis
R. L. Grubb
F. J. Gryszkiewcz
G. H. Hall
J. H. Harlow
F. W. Heinrichs
W. Henning
K. R. Highton
P. J. Hoefler
C. R. Hoesel
R. H. Hollister
E. Howells
C. Hurty
P. Iijima
R. G. Jacobsen
D. L. Johnson
A. J. Jonnatti
C. P. Kappeler
J. J. Kelly
W. N. Kennedy
J. P. Kinney
A. D. Kline
E. Koenig
J. G. Lackey
R. E. Lee
H. F. Light
S. Lindrgen
L. A. Lowdermilk
R. I. Lowe
M. L. Manning
K. T. Massouda
J. W. Matthews
S. P. Mehta
C. K. Miller
C. Millian
R. E. Minkwitz
M. I. Mitelman
H. R. Moore
W. E. Morehart
R. J. Musil
W. H. Mutschler
J. W. McGill
C. J. McMillen
W. J. McNutt
E. T. Norton
B. K. Patel
W. Patterson
H. A. Pearce
D. Perco
L. W. Pierce
J. M. Pollitt
C. T. Raymond
C. A. Robbins
J. R. Rossetti
L. J. Savio
W. E. Saxon
D. N. Sharma
V. Shenoy
W. W. Stein
L. R. Stensland
E. G. Strangas
D. W. Sundin
L. Swenson
D. S. Takach
A. L. Tanton
A. M. Teplitzky
V. Thenappan
R. C. Thomas
J. A. Thompson
T. P. Traub
D. E. Truax
W. B. Uhl
R. E. Uptegraff
G. H. Vaillancourt
R. A. Veitch
L. B. Wagenaar
R. J. Whearty
A. Wilks
W. E. Wrenn
E. J. Yasouda

Copyright The Institute of Electrical and Electronics Engineers, Inc.
Provided by IHS under license with IEEE
No reproduction or networking permitted without license from IHS
Not for Resale

When the IEEE Standards Board approved this standard on June 27, 1991, it had the following membership:

**Marco W. Migliaro**, *Chair* **Donald C. Loughry**, *Vice Chair*
**Andrew G. Salem**, *Secretary*

Dennis Bodson
Paul L. Borrill
Clyde Camp
James M. Daly
Donald C. Fleckenstein
Jay Forster*
David F. Franklin
Ingrid Fromm
Thomas L. Hannan
Donald N. Heirman
Kenneth D. Hendrix
John W. Horch
Ben C. Johnson
Ivor N. Knight
Joseph Koepfinger*
Irving Kolodny
Michael A. Lawler
John E. May, Jr.
Lawrence V. McCall
T. Don Michael*
Stig L. Nilsson
John L. Rankine
Ronald H. Reimer
Gary S. Robinson
Terrance R. Whittemore

*Member Emeritus

Also included are the following nonvoting IEEE Standards Board liaisons:

Fernando Aldana
Satish K. Aggarwal
James Beall
Richard B. Engelman
Stanley Warshaw

*IEEE Standards Department Project Editor*
Adam Sicker

Copyright The Institute of Electrical and Electronics Engineers, Inc.
Provided by IHS under license with IEEE
No reproduction or networking permitted without license from IHS
Not for Resale

# Contents


SECTION PAGE

1. Introduction ..... 9
   1.1 Scope ..... 9
   1.2 Purpose ..... 9

2. References ..... 9

3. Definitions ..... 11

4. Determination and Investigation of a Failure Occurence ..... 13
   4.1 Following a Suspected Failure ..... 13
   4.2 Investigation Flow Chart ..... 13

5. Data Collection ..... 15
   5.1 General Approach ..... 15
   5.2 Preparation ..... 15
   5.3 On-Site Investigation ..... 15
   5.4 Off-Site Investigations ..... 22
   5.5 Untanking and Tear-Down ..... 23

6. Analysis ..... 25
   6.1 General ..... 25
   6.2 Analysis of Mechanical Failure Windings ..... 25
   6.3 Analysis of Electrical Failure ..... 26
   6.4 Analysis of Other Electrical Failures ..... 31

7. Bibliography ..... 31

FIGURES

Fig 1 Suggested Investigation Flow Chart ..... 14

TABLES

Table 1 Suggested List of Preparation Items ..... 15
Table 2 Suggested Checklist of General Observations ..... 16
Table 3 Observations of Alarm or Trip ..... 17
Table 4 Electrical Tests ..... 18
Table 5 Tests of Gas and Insulating Fluid ..... 19
Table 6 Diagnostic Tests to Support Gas Analysis ..... 19
Table 7 Field Test Interpretation ..... 20
Table 8 Internal Inspection — Main Tank ..... 21
Table 9 Internal Inspection — LTC ..... 23
Table 10 Tear-Down Items ..... 24
Table 11 Relative Voltage Stresses in Core Form Transformers ..... 29
Table 12 Relative Voltage Stresses in Shell Form Transformers ..... 30



Copyright The Institute of Electrical and Electronics Engineers, Inc.
Provided by IHS under license with IEEE
No reproduction or networking permitted without license from IHS
Not for Resale

APPENDIXES PAGE


Appendix A Transformer Tests ..... 32
A1. Insulation Resistance Tests ..... 32
A2. Transformer Turns Ratio ..... 33
A3. Single-Phase Low-Voltage 60 Hz Excitation Test ..... 34
A4. Insulation Power Factor ..... 35
A5 Winding Resistance ..... 36
A6. Oil Testing ..... 36
A7. Low-Voltage Impulse Testing ..... 37
A8. Induced Voltage Test ..... 37
A9. Single-Phase Impedance Test ..... 38
A10. Core Ground Resistance ..... 39
A11. Applied Voltage Test (High Potential) ..... 39

Appendix B Transformer Construction ..... 40
B1. Types of Transformer Windings ..... 40
B2. Mechanical Clamping System ..... 51
B3. Electrical Shielding ..... 51

Fig B1 Forces Acting on Both the HV and LV Windings of a Simplified Two-Winding Core-Type Transformer During Through Fault Operation ..... 42
Fig B2 Forces Acting on Both the HV and LV Windings of a Simplified Rectangular Two-Winding Core-Type Transformer During Through Fault Operation ..... 43
Fig B3 Multilayer (Cylindrical) Windings ..... 44
Fig B4 Layer Windings ..... 44
Fig B5 Spiral (Helical) Windings ..... 45
Fig B6 Continuous Disc Windings ..... 46
Fig B7 Interleaved (Interlaced) Disc ..... 47
Fig B8 Example of Strap Winding ..... 48
Fig B9 Shell Form Support ..... 49
Fig B10 Forces Acting on a Simplified Winding of a Shell-Type Transformer During Through Fault Conditions ..... 50
Fig B11 Generated Force in a Shell Form Transformer ..... 52

Appendix C Case Histories ..... 53
C1. Lightning Impulse ..... 53
C2. Dielectric ..... 54
C3. Wet Insulation ..... 55
C4. Through Fault Mechanical Failure ..... 55
C5. Through Fault Mechanical Failure ..... 56
C6. Overheated Conductors ..... 56
C7. Overheated Joints ..... 57
C8. Tap Changer Problems Leading to Failure ..... 58
C9. Tap Changer Failure ..... 59
C10. Overheated Joints ..... 60



Copyright The Institute of Electrical and Electronics Engineers, Inc.
Provided by IHS under license with IEEE
No reproduction or networking permitted without license from IHS Not for Resale

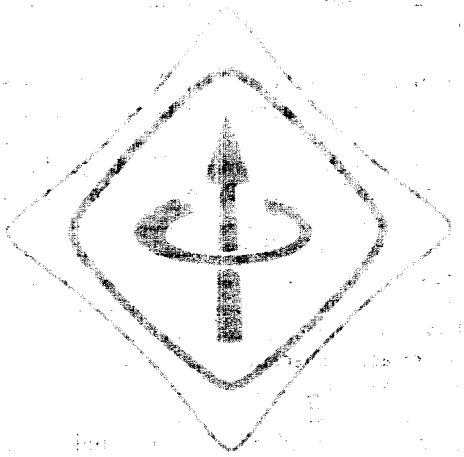

IEEE

Copyright The Institute of Electrical and Electronics Engineers, Inc.
Provided by IHS under license with IEEE
No reproduction or networking permitted without license from IHS

Not for Resale

# IEEE Guide for Failure Investigation, Documentation, and Analysis for Power Transformers and Shunt Reactors

## 1. Introduction

**1.1 Scope.** This guide recommends a procedure to be used to perform a failure analysis. Although the procedure may be used for an investigation into any ac transformer failure, it is primarily focused on power transformers used on electric utility systems.

**1.2 Purpose.** This document was intended for the following purposes:

(1) To provide a methodology by which the most probable cause of any particular transformer failure may be determined
(2) To provide sufficient guidelines, examples, and case histories to promote uniformity in the analysis of transformer failures
(3) To encourage the establishment of routine and uniform data collection so that valuable facts are not lost or destroyed
(4) To encourage consistency of nomenclature and compatibility with similar efforts by other organizations such as CIGRE, EEI, IEC, NEMA, and AEIC
(5) To encourage cooperative efforts by users and manufacturers during the failure analysis

## 2. References

[1] ASTM D117-89, Guide to Specifications for Electrical Insulating Oils of Petroleum Origin.[1]

[2] ASTM D877-89, Test Method for Dielectric Breakdown Voltage of Insulating Liquids Using Disk Electrodes.

[3] ASTM D971-92, Test for Interfacial Tension of Oil Against Water by the Ring Method.

[4] ASTM D1500-91, Test Method for ASTM Color of Petroleum Products (ASTM Color Scale).

[5] ASTM D1533-88, Test Method for Water in Insulating Liquids (Karl Fischer Method).

[6] ASTM D1542-60 (R88), Test Methods for Qualitative Tests for Rosin in Varnishes.

[7] ASTM D1816-90, Test Method for Dielectric Breakdown Voltage of Insulating Oils of Petroleum Origin Using VDE Electrodes.

[8] ASTM D4059-91, Test Method for Analysis of Polychlorinated Biphenyls in Insulating Liquids by Gas Chromatography.

[1] ASTM publications are available from the Customer Service Department, American Society for Testing and Materials, 1916 Race Street, Philadelphia, PA 19103, USA.



Copyright The Institute of Electrical and Electronics Engineers, Inc.
Provided by IHS under license with IEEE
No reproduction or networking permitted without license from IHS
Not for Resale

[9] ANSI C57.97-1971, American National Standard Guide for Preparation of Specifications for Large Power Transformers, With or Without Load-Tap-Changing.[2]

[10] IEEE C37.2-1991, IEEE Standard Electrical Power System Device Function Numbers (ANSI).[3]

[11] IEEE C37.91-1985 (Reaf 1990), IEEE Guide for Protective Relay Applications to Power Transformers (ANSI).

[12] IEEE C57.12.00-1987, IEEE General Requirements for Liquid-Immersed Distribution, Power, and Regulating Transformers (ANSI).

[13] IEEE C57.12.11-1980, IEEE Guide for the Installation of Oil-Immersed Transformers (10 MVA and larger, 69 kV to 287 kV Rating) (ANSI).

[14] IEEE C57.12.12-1980, IEEE Guide for Installation of Oil-Immersed EHV Transformers, 345 kV and Above (ANSI).

[15] IEEE C57.12.80-1978 (Reaf 1986), IEEE Standard Terminology for Power and Distribution Transformers (ANSI).

[16] IEEE C57.12.90-1987, IEEE Standard Test Code for Liquid-Immersed Distribution, Power, and Regulating Transformers; and Guide for Short-Circuit Testing of Distribution and Power Transformers (ANSI).

[17] IEEE C57.19.00-1991, IEEE General Requirements and Test Procedures for Outdoor Apparatus Bushings (ANSI).

[18] IEEE C57.21-1990, IEEE Requirements, Terminology, and Test Code for Shunt Reactors Rated Over 500 kVA (ANSI).

[19] IEEE C57.98-1986, IEEE Guide for Transformer Impulse Tests (ANSI).

[20] IEEE C57.104-1991, IEEE Guide for the Interpretation of Gases Generated in Oil-Immersed Transformers.[4]

[21] IEEE C57.106-1991, IEEE Guide for Acceptance and Maintenance of Insulating Oil in Equipment.[5]

[22] IEEE PC57.93/D5, Guide for Installation of Liquid Immersed Power Transformers, 9/12/91.[6]

[23] IEEE Std 62-1978, IEEE Guide for Field Testing Power Apparatus Insulation.

[24] IEEE Std 100-1988, IEEE Standard Dictionary of Electrical and Electronics Terms.

[25] A Stitch in Time..., Biddle Inst. Co., Bluebell, PA.

[2]This document is currently out of print. Photocopies of this document can be obtained from the American National Standards Institute, 11 West 42nd Street, 13th Floor, New York, New York, 10036, USA.

[3]IEEE publications are available from the Institute of Electrical and Electronics Engineers, Service Center, 445 Hoes Lane, P.O. Box 1331, Piscataway, NJ 08855-1331, USA.

[4]This standard will be available from the Institute of Electrical and Electronics Engineers, Service Center, 445 Hoes Lane, P.O. Box 1331, Piscataway, NJ 08855-1331, USA, in mid 1992.

[5]See footnote 4.

[6]This authorized standards project was not approved by the IEEE Standards Board at the time this went to press. It is available from the IEEE Service Center



Copyright The Institute of Electrical and Electronics Engineers, Inc.
Provided by IHS under license with IEEE
No reproduction or networking permitted without license from IHS
Not for Resale

## 3. Definitions

All definitions, except as specifically covered in this section, shall be in accordance with IEEE Std 100-1988 [24].[7]

**abnormal low-frequency system voltages.** The short-term ac voltages caused by over excitation, unbalanced loading, or fault conditions that are typically removed from the system by operation of protective relay action.

**ancillary equipment.** Auxiliary or accessory equipment (e.g., thermometer, liquid level gage) (see also IEEE Std 100-1988 [24]).

**annealing temperature.** The temperature at which a conductor loses its yield strength.

**axial direction.** (1) The general direction of flux in the core laminations; (2) the axis about which a coil is wound (see Fig B1).

**axial spacer.** A spacer that runs the axial length of a coil and supports the coil (see Fig B1).

**beam strength.** The property of the winding conductor that gives it the ability to withstand stresses normal to the inductor when supported by pressboard spacers (see Fig B1).

**clamping plates.** Top and bottom support for core form windings.

**coil.** Synonymous with winding.

**coil support.** A hardwood, phenolic, or steel plate supporting and insulating the coil and providing axial prestress for the coil.

**compressive force.** (1) The force that presses the inside coil toward the core; (2) the force attraction that presses coils wound in opposing directions together in a set of pancake coils (see Fig B1).

**continuous-disc winding (transformer winding).** Insulated conductors wound radially, one on top of the other, on an insulated cylinder. The outside turn of one disc section is then carried over (crossed over) to the next disc section, but the turns proceed from the outside to the inside position using a simple winding technique. This process of building up discs continues until the winding is completed. Similarly to the spiral winding, the conductors are wound over axial spacer strips, and radial spacers are used to separate the disc sections. Unlike spiral windings, outside crossovers occur at every pair of disc coils, and they must by properly insulated and mechanically braced. If disc coils are wound with two or more strands in parallel, the strands are normally transposed at the crossovers to balance the current in the strands.

**contributing cause.** A cause that, by itself, may not result in failure.

**core clamp.** Structural member for holding the core yoke.

**core laminations.** Flat, thin, grain-oriented, or amorphous steel sheets that are stacked to form the core.

**core form.** A type of transformer in which the windings surround the core.

**core tongue.** The section of core steel in the window of shell transformer coils.

[7]The numbers in brackets correspond to those of the references in Section 2.



Copyright The Institute of Electrical and Electronics Engineers, Inc.
Provided by IHS under license with IEEE
No reproduction or networking permitted without license from IHS
Not for Resale

**core yoke.** The top or bottom element of laminations that connects the core legs of the transformer.

**cylinder.** A tube that provides radial support and/or insulation for the inner winding and insulation for the outer windings.

**DETC.** Deenergized tap changer (preferred usage over NLTC).

**end frames.** Thick steel slabs forming a frame to provide beam strength to restrain the rectangular coil.

**end support.** Axial support.

**failure.** The termination of the ability of a transformer to perform its specific function (see IEEE Std 100-1988 [24]).

**failure analysis.** The logical, systematic examination of an item or its diagram(s) to identify and analyze the probability, causes, and consequences of potential and real failure (see IEEE Std 100-1988 [24]).

**failure cause.** The circumstances during design, manufacture, or use that have led to failure. Also called *root cause*. (see IEEE Std 100-1988 [24]).

**failure mode.** The manner in which failure occurs; generally categorized as electrical, mechanical, thermal, and contamination.

**focused tests.** Tests performed to identify a particular area of failure.

**hoop tension.** The stretching force that acts on a coil in the circumferential direction (see Fig B1 and 6.2.2.1).

**initiating causes.** See *contributing causes*.

**interphase core.** The section of core steel between phases on a shell transformer.

**layer (cylindrical or barrel) winding.** One or more layers of insulated conductors wound upon an insulated cylinder, similar to the way that thread is wound upon a spool.

**LTC.** Load tap changer.

**main tank.** The steel container for the main coil and insulating fluid (liquid or gas).

**major insulation.** Insulation between phases or phase to ground and winding to winding.

**minor insulation.** Turn-to-turn insulation, material that insulates individual conductors; layer-to-layer insulation; section-to-section insulation.

**monitor.** Continued, periodic testing with attention paid to comparing test results so that trends are observed.

**pancake winding (transformer windings).** A coil consisting of multiple conductors wound concentrically in groups of turns to form a disk; commonly used to describe the flat disks used in shell form transformers (see B1.3.1).



Copyright The Institute of Electrical and Electronics Engineers, Inc.
Provided by IHS under license with IEEE
No reproduction or networking permitted without license from IHS
Not for Resale

**radial direction.** (1) The direction on a radius from the center of a circular coil; (2) the direction perpendicular to the flux in the core (see Fig B1).

**radial spacer.** A spacer stacked between coils on a concentric circular coil. Radial spacers are aligned axially and support the coil in the axial direction (see Fig B1).

**sheet winding (transformer windings).** A coil consisting of multiple turns of full-width sheets of copper or aluminum (see B1.2.7).

**shell form.** A type of transformer in which the core surrounds the winding (see Fig B9). Individual coils are wound so that their currents flow in the same direction.

**spiral (helical) winding (transformer windings).** Many insulated conductors in parallel, often two strands wide and many (6–20) strands high, spirally wound on an insulating cylinder from one end to the other. Continuously transposed cable may also be used. The spiral winding resembles a spring coil.

**strap-wound coils (transformer windings).** Single or multiple layer conductors, from 1–3 in wide, spirally wound around an insulating form, with a layer of insulation between conductors. The conductors can be aluminum or copper. This type of winding can consist of two or more groups electrically connected in parallel. Typically used in low-voltage windings.

**strip-wound coils (transformer windings).** Single conductors, from 3–10 in wide, spirally wound around an insulating form, with a layer of insulation between the conductors. The conductors can be aluminum or copper. This type of winding can consist of two or more groups electrically connected in parallel. Typically used in low-voltage windings.

**tie rod.** A structural connection between the top and bottom core clamp.

## 4. Determination and Investigation of a Failure Occurrence

**4.1 Following a Suspected Failure.** This guide suggests procedures to be followed after the transformer has been tripped by protective equipment or when it is suspected that a transformer is unfit for service. The decision of what to do after a transformer has been tripped by protective equipment will vary depending upon the circumstances, the transformer application, and the transformer value.

In practice, the operating procedures of the user companies dictate the actual sequence of events following the isolation of a transformer. However, it must be recognized that reenergizing a transformer with an internal fault will increase the damage and can destroy original evidence of the failure. Whether or not a transformer is reenergized, the facts available prior to and during the initial trip should be recorded. This is the opportune time to accumulate this data, and subsequent actions may depend on this information.

**4.2 Investigation Flow Chart.** For many companies, it may be desirable to perform selected tests. Fig 1 has been developed to aid in the determination and investigation of a transformer failure. This flowchart forms the basis for this guide.

The two starting points for this flowchart are (1) *transformer tripped or malfunctioned*, and (2) *routine tests show deviation from past*. Routine tests cover such tests as those listed in Table 4 and Table 5.

The paths in the flowchart lead either to scrapping or returning to service. Prior to returning to service, it may be desirable to perform selected tests to verify suitability for service. Following return to service, it is suggested that the transformer be monitored by periodic electrical tests and tests that include oil sampling for dissolved gas in oil analysis.



Copyright The Institute of Electrical and Electronics Engineers, Inc.
Provided by IHS under license with IEEE
No reproduction or networking permitted without license from IHS
Not for Resale

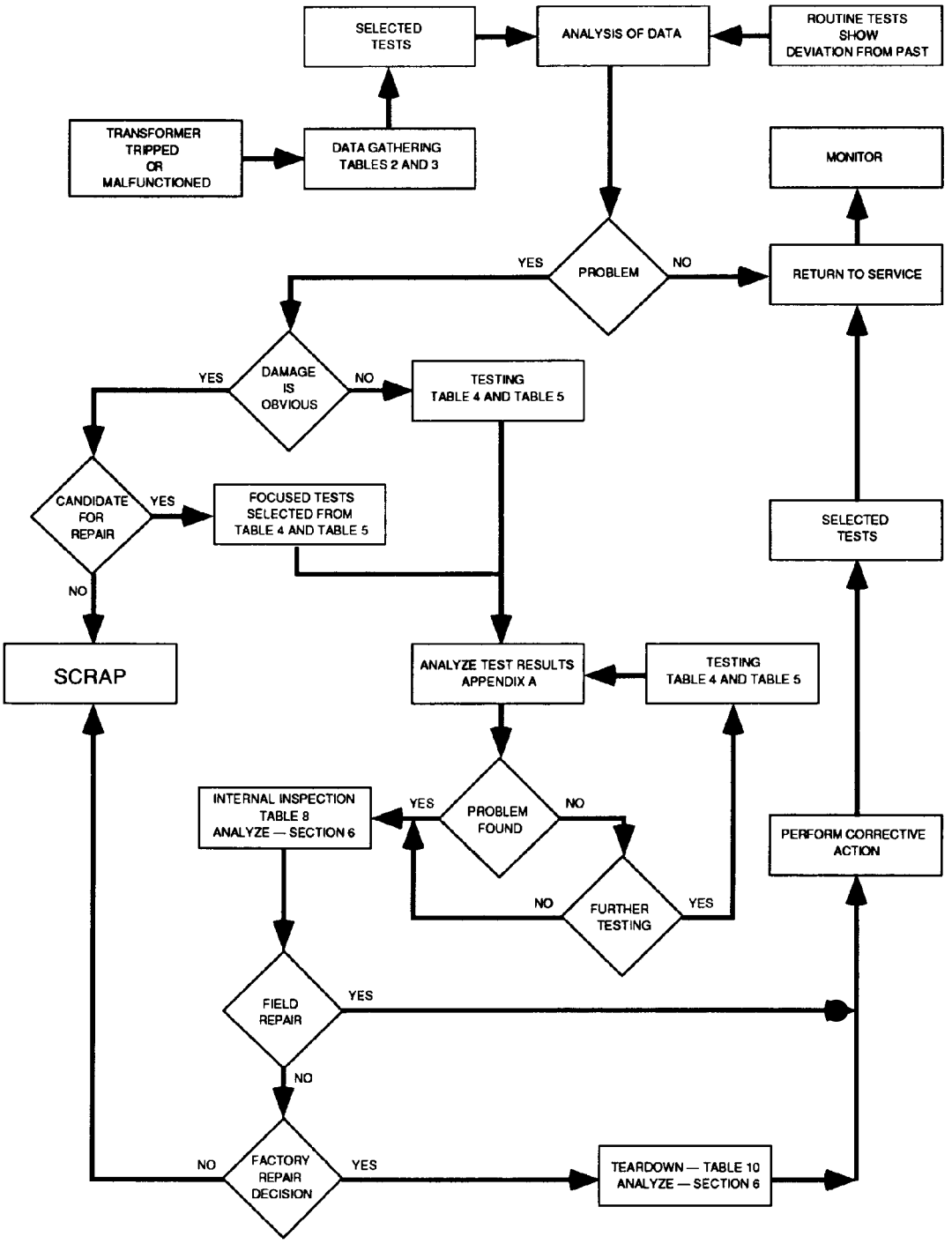


**Fig 1**
**Suggested Investigation Flow Chart**



Copyright The Institute of Electrical and Electronics Engineers, Inc.
Provided by IHS under license with IEEE
No reproduction or networking permitted without license from IHS
Not for Resale

Based upon the external observations (see Table 2) or the presence of obvious damage, selected tests can be performed as suggested in 5.3.3. From their results, a hypothesis of failure can be confirmed through internal inspection and teardown, as deemed appropriate.

## 5. Data Collection

**5.1 General Approach.** Cooperation at all levels of the user company should speed the user's investigation work at the site and improve the accuracy of the diagnosis.

It is important that the manufacturer be informed of the equipment failure, especially when the equipment is under warranty. The manufacturer will probably be required to supply information, particularly the factory test data, inspection history, and nonproprietary internal construction drawings.

Development of a team concept may be helpful for the final analysis of data. It is suggested that the team include representatives of the user and manufacturer/repair facility. This may speed the work and may also eliminate any considerations of bias in the final diagnosis.

**5.2 Preparation.** Some preparation prior to traveling to the site will aid the site investigation. Failure investigations at the site are similar to detective work; a sense of curiosity and objectivity is vital.

A quick review of information that might be available in a file regarding the subject transformer may prove to be valuable before traveling to the site. Some items may also be taken to the site. Table 1 is a suggested check-list of various items to be considered.

**Table 1**
**Suggested List of Preparation Items**

| | |
|---|---|
| ____ | Transformer instruction manual (includes such items as outline and schematic drawings, descriptions of transformer components, and factory photographs) |
| ____ | Transformer test reports |
| ____ | factory tests |
| ____ | field tests |
| ____ | Routine inspection reports |
| ____ | Single-line diagram of station |
| ____ | Relaying scheme |
| ____ | Records of maintenance work that may include reports on past problems |
| ____ | Instrument settings for the particular transformer, relays, and measuring devices |
| ____ | Camera (video, instant, 35mm) |
| ____ | Tape measure |
| ____ | Protective clothing |
| ____ | Field glasses |
| ____ | Magnifying glass |
| ____ | Tape recorder |
| ____ | Borescope |
| ____ | Flashlight |
| ____ | Magnet (to determine if particles are magnetic) |
| ____ | Oil sample bottle and syringes |
| ____ | Oxygen meter |

**5.3 On-Site Investigation.** Timeliness of an inspection of the failed transformer is very important. Data could be destroyed because of movement of the transformer or changes in the system configuration. Therefore, data collection and tests should proceed as quickly as possible.

Work crews are almost always on site before investigators. It is usually not practical, however, to cease restoration of service until the investigators arrive. Therefore, instructions should be given to operating personnel for restoration of service with minimum negative impact on failure investigation work. If possible, all work should cease on the transformer



Copyright The Institute of Electrical and Electronics Engineers, Inc.
Provided by IHS under license with IEEE
No reproduction or networking permitted without license from IHS
Not for Resale

until the investigators have had a chance to look at the transformer, take photographs, take notes, and perform tests that will assist future analysis.

Familiarity with the site, transformer, and general area is important. Personnel familiar with the operation and maintenance of the transformer should be part of the investigation

It is preferable that at least two individuals inspect the transformer initially. Two people can support one another, discuss the various findings, and determine the immediate "next step" at the site.

Items that may be of importance to the investigation include conditions at the time of the failure, physical inspections of the transformer following failure, and electrical conditions of the transformer following failure. Tables 2 and 3 contain suggested check lists of observations.

**Table 2**
**Suggested Checklist of General Observations**

| Area | Recorded Data |
|---|---|
| **External Conditions** | |
| ____ No lights call | |
| ____ Storms or lightning in area | |
| ____ Unusual sounds, odors | |
| ____ Debris expelled from transformer or accessories | |
| ____ Dead animals in area on top of transformer | |
| ____ Evidence of animal contact (animal may not be dead) | |
| ____ Foreign objects in area | |
| ____ Glowing parts — visual | |
| ____ Infrared | |
| ____ Transformer deluge system | |
| ____ Evidence of vandalism | |
| ____ Interview of witnesses or station operators present when unit tripped or failed | |
| ____ Load on transformer | |
| ____ System disturbances | |
| ____ Switching configuration in station at time of event | |
| **Coolers** | |
| ____ Fans or pumps operating | |
| ____ Radiator valves fully open | |
| ____ Air flow-through radiator or heat exchanger impeded by debris or corrosion | |
| **Surge Arresters** | |
| ____ Surge arrester operation* | |
| ____ Surge arrester counter reading | |
| ____ Physical condition | |
| ____ Electrical condition | |
| ____ Surge arrester ground connection | |
| ____ Surge arrester blocks (if mounted in transformer tank) | |
| **Main Tank** | |
| ____ Bulged | |
| ____ Cracked | |
| ____ Leaks | |
| ____ Signs of overheating | |
| ____ Oil level in conservator | |
| ____ Gaskets or seals, leaks, etc. | |
| ____ Gas pressure on sealed transformer | |
| ____ Control cabinet problem | |



Copyright The Institute of Electrical and Electronics Engineers, Inc.
Provided by IHS under license with IEEE
No reproduction or networking permitted without license from IHS
Not for Resale

**Table 2 (*Continued*)**
**Suggested Checklist of General Observations**

| Area | Recorded Data |
|---|---|
| **Bushings** | |
| ____ Leaks | |
| ____ Broken porcelain | |
| ____ Holes in cap | |
| ____ T racking | |
| ____ Oil level | |
| **Tap Changer** | |
| ____ Position of LTC — as found | |
| ____ Maximum position | |
| ____ Minimum position | |
| ____ Position of DETC | |
| ____ Oil level in LTC compartment | |
| ____ LTC counter reading | |

*Confirming proper operation of surge arresters may require returning the arrester to a factory test facility.

**Table 3**
**Observations of Alarm or Trip**

| Area | Recorded Data |
|---|---|
| **Protective Relay Targets** | |
| ____ Differential (87)* | |
| ____ Overcurrent (50, 51, 6) | |
| ____ Phase current (50, 51, 67, 21, 32) | |
| ____ Ground fault (50N, 51N, 64) | |
| ____ Polarizing (36, 32) | |
| ____ Overexcitation (81) | |
| ____ Meter indications (overloads, unbalances, open phases) | |
| ____ Operation of fault pressure relay (63, 63FP, 63SP) | |
| ____ Operation of pressure relief device (63PR, 63P) | |
| **Temperature (as found and maximum)** | |
| ____ Liquid (or top oil) (49, 26) | |
| ____ Winding (or hot spot) (49, 26) | |
| **Oil Level** | |
| ____ Main tank (71) | |
| ____ LTC (71) | |
| ____ Conservator (71) | |
| **Operation of** | |
| ____ Gas detector delay (63GD) | |
| ____ Gas accumulator relay | |
| ____ Oil flow gages (80, 74) | |
| ____ Targets on an alarm annunciator (30, 74) | |
| ____ Blown fuse | |
| ____ Data recorder sequence of events | |
| ____ Oscillograph sequence of events | |

*Numbers in parentheses are IEEE device numbers (IEEE C37.2-1991 [11]).



Copyright The Institute of Electrical and Electronics Engineers, Inc.
Provided by IHS under license with IEEE
No reproduction or networking permitted without license from IHS

Not for Resale

**5.3.1 Electrical Tests.** Before performing any tests, precautions should be taken to ensure that the transformer is disconnected from all power and auxiliary sources and has been properly grounded. Electrical tests should not be conducted until the unit has been tested for combustible gas and has been found to be safe. Purging may be necessary before making electrical tests. Table 4 is a suggested checklist of electrical tests. It is recommended that the user consult the manufacturer's instruction leaflet.

**Table 4**
**Electrical Tests**

| Common Field Tests | Notes |
|---|---|
| **Insulation Resistance** | |
| ____ Winding to winding | (1) (4) |
| ____ Winding to ground | (1) (4) |
| ____ All windings to ground | (1) (4) |
| ____ Core to ground | (5) |
| ____ Dielectric absorption (polarization index) | (1) |
| **Other Common Field Tests** | |
| ____ Transformer turns ratio | (2) (4) |
| ____ Insulation power factor | (1) |
| ____ Winding dc resistance | (2) (4) |
| ____ Oil dielectric breakdown (on-site, by compartment) | (4) |
| ____ Excitation (low-voltage 60 Hz) | (2) (3) (4) |
| **Other Diagnostic Tests** (which may be performed if possible) | |
| ____ Low-voltage impulse | (3) (4) (2) |
| ____ Induced-voltage test | (2) |
| ____ Impedance (single-phase) | (3) (4) (2) |

NOTES: The notes suggest probable areas of concern:
(1) Major insulation — electrical
(2) Minor insulation (shorted turns) — electrical
(3) Mechanical damage (short-circuit forces, etc.) — mechanical
(4) Indicates damage location
(5) Indicates electrical path from core to ground

For tutorial information on these tests, see Appendix A.

**5.3.2 Sampling and Tests of Gas and Insulating Fluid.** Samples of insulating fluid should be taken for field and lab testing and for additional tests later. Samples should be taken prior to opening the transformer for inspection. Table 5 is a suggested checklist of gas and insulating fluid tests.

**5.3.3 Focused Tests.** Gas tests can provide information as to the category of transformer problem. These problems are categorized by C57.104-1991 [20]. Table 6 suggests electrical and oil tests that can be used to confirm problems detected by gas analysis. The order of tests shown not only reflects the significance of the test with respect to locating the failure, but also takes into account the ease of performance and probability of equipment availability.



Copyright The Institute of Electrical and Electronics Engineers, Inc.
Provided by IHS under license with IEEE
No reproduction or networking permitted without license from IHS
Not for Resale

## Table 5
## Tests of Gas and Insulating Fluid

| Tests | Recorded Data |
|---|---|
| **Field Tests** | |
| ____ Field measurement of total combustible gas present in gas space for gas blanketed transformers, or in gas detector relays of sealed-type conservator transformers (see IEEE C57.104-1991 [20]) | |
| ____ Dew point of gas space | |
| **Laboratory Tests** (should be performed according to applicable ASTM standard methods) | |
| ____ Laboratory analysis of individual component gases present in gas space for gas blanketed transformers, or in gas detector relays of sealed-type conservator transformers (see IEEE C57.104-1991 [20]) | |
| ____ Laboratory analysis of individual component gases present in gas that is dissolved in oil (see IEEE C57.104-1991 [20]) | |
| ____ Laboratory analysis of oil defined as laboratory tests by IEEE C57.106-1991 [21] | |
| ____ Various laboratory analyses of particulate matter and trace metals in the insulating oil | |
| ____ PCB in oil (see ASTM D4059 [8]) | |

## Table 6
## Diagnostic Tests to Support Gas Analysis

| Fault Type | Test Significance | | | | | | |
|---|---|---|---|---|---|---|---|
| Electrical Arcing | Oil tests of physical properties (see A6)* | Insulation resistance A1 and TTR (see A2) | Power factor (see A4) | LV excitation (see A3) | Impedance (see A9) | Resistance (see A5) | Induce/ RIV (see A8) |
| Electrical Corona | Oil tests of physical properties (see A6) | Insulation resistance A1 and TTR (see A2) | Power factor (see A4) | Induce/ RIV (see A8) | LV excitation (see A3) | Impedance (see A9) | Resistance (see A5) |
| Thermal Cellulose | Oil tests of physical properties (see A6) | Insulation resistance A1 and TTR (see A2) | Resistance (see A5) | Power factor (see A4) | LV excitation (see A3) | Impedance (see A9) | Induce/ RIV (see A8) |
| Thermal Oil | Oil tests of physical properties (see A6) | Insulation resistance A1 and TTR (see A2) | Resistance (see A5) | LV excitation (see A3) | Power factor (see A4) | Impedance (see A9) | Induce/ RIV (see A8) |

*Refer to the paragraph in Appendix A listed in each block for help in interpreting the results of each test.

Table 7 lists common problem areas, along with supported test results.

The priorities, as shown in Table 7, allow each suspected problem category to be supported or dismissed by referencing more than one test per category. While Table 7 only lists a few broad categories, expansion of this table should be developed by individual users as case histories within their organization show significant correlation between a category and two or more tests.



Copyright The Institute of Electrical and Electronics Engineers, Inc.
Provided by IHS under license with IEEE
No reproduction or networking permitted without license from IHS
Not for Resale

**Table 7**
**Field Test Interpretation**

| Suspected Problem Category | Significant Test Data | | |
|---|---|---|---|
| | First Priority | Second Priority | Third Priority |
| Shorted Winding Turn (Minor Insulation) | Out of tolerance ratio (see A2)* † | Lower winding resistance (see A5) | Increase in excitation (see A3) |
| Open Winding Circuit | Out of tolerance ratio (see A2)‡ | Higher resistance (see A5) | High RIV (see A8) |
| Moisture | High insulation power factor (see A4) | Oil tests low dielectric, high moisture (see A6) | Low insulation resistance (see A1) |
| Damage to Major Insulation | High insulation power factor (see A4) | Low insulation resistance (see A1) | High RIV (see A8) |
| Through Fault Mechanical Damage | Deviation of exciting current (see A3) Higher impedance (see A9) | High RIV (see A8) | Change in LV impulse (see A7) |
| Core Heating | Abnormal gas analysis§ | Low core ground resistance (see A10) | Increase in excitation (see A3) |

*Refer to the paragraph in Appendix A listed in each block for help in interpreting the results of each test.
†Gas analysis indicated a thermal cellulose problem as described by C57.104-1991 [20].
‡Gas analysis indicated an arcing problem as defined by C57.104-1991 [20].
§Gas analysis indicated a thermal problem in oil as described by C57.104-1991 [20].

In all cases, gas-in-oil tests may detect or support any of the categories shown. However, when it is difficult to detect a category in any other way except gas-in-oil tests, gas-in-oil tests are listed as a priority.

**5.3.4 Internal Inspection of Main Tank and LTC.** An internal inspection of the failed transformer on-site is usually warranted to determine the location of failure and the extent of damage. All safety precautions must be observed at all times, such as checking for a minimum 19.5% oxygen content, purging with dry air, and providing adequate ventilation for personnel before entering the tank. For gas-sealed units, relieve any pressure before removing access covers. It is recommended that the user consult the manufacturer's instruction leaflet.

First, the interior should be inspected visually from outside the transformer by removing access covers. Be certain that the top oil level is below any opening prior to removing the cover plate.

Lowering of oil can cause spreading of contamination throughout the core and coil assembly if contamination or failure impurities are floating on the oil surface. A visual inspection through an inspection port should be made before lowering the oil level to near the core and coil assembly. Remember, the transformer may be capable of being field repaired. Take appropriate precautions to avoid further damage during the investigative process.

It is necessary to remove some oil from the transformer prior to entering the tank for internal inspection. A strainer should be used to prevent debris from clogging the oil pump and filter and to capture any evidence. The oil-draining process should be followed by purging with



Copyright The Institute of Electrical and Electronics Engineers, Inc.
Provided by IHS under license with IEEE
No reproduction or networking permitted without license from IHS
Not for Resale

dry air at a safe positive pressure. Appropriate precautions should be taken regarding PCB contamination.

When oil is removed, the exposure time must be kept to a minimum to reduce moisture entrance into the tank. Before entering the transformer, internal drawings or photographs should be studied, and a plan should be made of inspection and movement inside the unit. When site investigation is completed, the access covers should be replaced and the transformer refilled with dry air. Items taken into the tank should be noted and removed when the inspection is complete.

Cleanliness is important in preventing further damage to the transformer. Steps should be taken to prevent the entrance of moisture and foreign material into the transformer. Care should be taken to avoid causing additional damage. Table 8 is a suggested checklist for the main tank, and Table 9 is a checklist for the tap changer compartment.

**Table 8**
**Internal Inspection — Main Tank**

| Main Tank | Recorded Data |
|---|---|
| **Oil** | |
| ____ Odor of oil (unusual) | |
| ____ Color of oil | |
| ____ Indications of moisture and its location | |
| ____ Free water in tank and amount | |
| **Debris** (type) | |
| ____ Amount | |
| ____ Location | |
| ____ Sample for analysis | |
| **Burns, Discoloration, or Deposits** (which are the result of arc or stray flux overheating in areas such as) | |
| ____ Tank walls | |
| ____ Bushing terminals | |
| ____ Corona shields | |
| ____ Copper connectors | |
| ____ Bus bars | |
| ____ Miscellaneous (list) | |
| **Loose Connections or Splices to** | |
| ____ Tap leads | |
| ____ Bushings | |
| ____ Terminal boards | |
| ____ Collars | |
| ____ Spacers | |
| ____ Core ground strap | |
| ____ Core hold-down angle (braces) | |
| **Condition of DETC** | |
| ____ Contacts | |
| ____ Operating mechanism | |
| ____ Coupling shaft | |
| ____ Shielding | |



Copyright The Institute of Electrical and Electronics Engineers, Inc.
Provided by IHS under license with IEEE
No reproduction or networking permitted without license from IHS
Not for Resale

**Table 8 (*Continued*)**
**Internal Inspection — Main Tank**

| Main Tank | Recorded Data |
|---|---|
| **Carbon Tracking** | |
| ____ Location | |
| ____ Amount | |
| ____ Porcelain damage | |
| ____ Copper or aluminum splatter | |
| ____ Spongy insulation or leads | |
| **Conditions of Windings and Leads** | |
| ____ Lead clamping | |
| ____ Winding support system | |
| ____ Clamping | |
| ____ Winding distortion | |
| ____ Winding movement | |
| ____ Insulation discoloration | |
| ____ Lead distortion | |
| ____ Lead movement | |
| ____ Condition of series transformer | |
| ____ Condition of preventive auto | |
| ____ Indication of local hot spots | |
| ____ Connection overheating (squeeze all accessible connections) | |
| **Condition of CTs** | |
| ____ CTs | |
| ____ Hot-spot measurement system | |
| ____ Wiring | |
| ____ Support brackets | |
| ____ Tank wall penetration block | |
| **Condition of Core** | |
| ____ Electrical wiring | |
| ____ Overheating | |
| ____ Abnormal test results of insulation resistance from core to ground | |
| ____ Evidence of oil level inside tank | |
| ____ Tank wall stray flux shunt packs damaged | |
| ____ Core ground connection at core | |
| ____ Rust on core (location and amount) | |
| ____ Condition of yoke bolts | |
| ____ Loose core steel | |
| ____ Evidence of core damage | |
| ____ Condition of core framing structure (welds, deformation) | |

## 5.4 Off-Site Investigations

**5.4.1 Manufacturing History.** Information regarding design, including internal drawings, can occasionally be regarded as proprietary; however, knowledge of the construction of the unit is necessary to make an objective failure analysis. This information usually is used best in analysis through joint discussions between the manufacturer and the user.

Records that may be reviewed include QA reports, test results, specification agreements, and design specifications.

**5.4.2 Shipping and Installation History.** Records that may be reviewed include impact recorder data, storage condition before installation, field assembly and oil-filling procedures and records, date of energization, weather at time of installation, record of installation tests, and acceptance procedures for the transformer.



Copyright The Institute of Electrical and Electronics Engineers, Inc.
Provided by IHS under license with IEEE
No reproduction or networking permitted without license from IHS
Not for Resale

**Table 9**
**Internal Inspection — LTC**

| | LTC Compartment | Recorded Data |
|---|---|---|
| ____ | Unusual burning of contacts | |
| ____ | Arcing between contacts | |
| ____ | Arcing from contact to ground | |
| ____ | Mechanical failure of parts | |
| ____ | Misalignment of parts | |
| ____ | Failure of vacuum bottles | |
| ____ | Condition of motor drive | |
| ____ | Evidence of oil level | |
| ____ | Condition of tap board | |
| ____ | Correct operation of electrical and mechanical end of travel limits | |
| ____ | Evidence of parts broken | |
| ____ | Evidence of parts bent | |
| ____ | Condition of transition resistor | |
| ____ | Condition of series transformer | |
| ____ | Condition of tank seals | |
| ____ | Condition of silica gel breather | |
| ____ | Presence of carbon deposits | |
| ____ | Parts missing | |
| ____ | Loose parts found | |
| ____ | Condition of preventive autotransformer (reactor) | |
| ____ | Condition of vacuum switch (if used) | |
| ____ | Position of all contacts | |
| ____ | Evidence of moisture | |
| ____ | Condition of stationary contacts | |
| ____ | Condition of moveable contacts | |
| ____ | Condition of reversing switch | |

**5.4.3 Operational History.** The design loading limits of the unit should be known. This should include nameplate data and any additional design information that the manufacturer can supply. Loading information (to the extent available), including unusual loads, may be vital information. Details of the protection system, its settings, and its operation and functional testing may be useful. Records of unusual occurrences, a history of system faults, and knowledge of other and similar systems (so that comparisons may be made) are all important records to have available. A record of voltage variances, whether system or lightning surge, is an important factor.

Records that may be reviewed include loading, in-service time, short circuits, system transients (frequency and voltage) or switching operations, weather at the time of failure, and protection history.

**5.4.4 Maintenance History.** Maintenance routines, dates, and types of maintenance are important records that should be consulted. The record of modifications and repairs should be reviewed.

**5.4.5 User Failure History.** Users' failure records should be considered in establishing the record of failure of identical or similar units and of units at the same location. Particular attention should be given to the damaged area and evidence found in any previous investigations.

**5.5 Untanking and Tear-Down.** Identifying the cause of failure may necessitate the disassembly of a transformer. A planned, systematic approach must be used. Agreement should be reached between the user and the manufacturer/repair facility as to what will be sent to the tear-down facility. Scheduling should be preplanned so that all parties have the opportunity to witness various stages of disassembly. It is advisable to photograph each critical stage so that permanent records are maintained. Care in the disassembly should be taken so that evidence



Copyright The Institute of Electrical and Electronics Engineers, Inc.
Provided by IHS under license with IEEE
No reproduction or networking permitted without license from IHS
Not for Resale

of failure or cause of failure is not destroyed. Table 10 shows a suggested check list to be used during tear-down.

**Table 10**
**Tear-Down Items**

| Main Tank | Recorded Data |
|---|---|
| **Core Damage — Breakdown of Core Insulation due to** | |
| ____ Ground current through core | |
| ____ Overheating due to excessive magnetic flux | |
| ____ Welded core laminations | |
| **Evidence of Tracking Results From Dielectric Breakdown due to** | |
| ____ Moisture | |
| ____ Contamination | |
| ____ Clearance problems | |
| ____ Gas evolution | |
| ____ Static electrification | |
| ____ Partial discharge (corona) | |
| ____ Length of track and path | |
| ____ Burned, charred, or discolored insulation | |
| ____ Punctures in insulation | |
| ____ Burned conductors | |
| ____ Melted conductors | |
| ____ Scalloped conductors between radial spacers | |
| **Evidence of Radial Failure** | |
| ____ Conductor stretching | |
| ____ Inward radial collapse | |
| ____ Scalloped conductors | |
| **Evidence of Axial Failure** | |
| ____ Conductor tilting | |
| ____ Beam failure | |
| ____ Collapse of winding end supports | |
| **Evidence of Mechanical Failure** | |
| ____ Evidence of mechanical wear to conductor insulation (check at edge or radial spacers) | |
| ____ Circumferential displacement of conductors | |
| ____ Evidence of foreign objects — location | |
| ____ Core through bolt insulation breakdown | |
| ____ Overheating due to excessive magnetic flux | |
| ____ Movement or distortion of the clamping structure | |
| ____ Winding spacers out of line in core type, indicated looseness of winding | |
| ____ Washer board spacers and collars out of phase or not located properly to support shell form pancake winding conductor | |
| ____ Loose or damageD core ground connection | |
| **Evidence of Thermal Failure** | |
| ____ Discolored insulation of unfailed phase | |



Copyright The Institute of Electrical and Electronics Engineers, Inc.
Provided by IHS under license with IEEE
No reproduction or networking permitted without license from IHS
Not for Resale

# 6. Analysis

**6.1 General.** Once sufficient data has been gathered from the on-site and off-site investigations, several hypotheses should be developed using the scientific method. A hasty analysis may lead to a bad diagnosis. It is recommended that data be thoroughly studied before interpretations are finalized. In-service failure usually results in mechanical damage and electrical failure. The energy available from the power system can cause both to occur. One must use caution in reporting cause and effect.

These hypotheses should be tested against the data and the performance of other system components. This may be done through peer group discussions and data verification. Any information found incorrect should be replaced, if possible, with correct information. Studies, appropriate laboratory experiments, and factory simulations could be initiated to test the accuracy of each hypothesis.

If the assembled data does not support a proposed hypothesis, a revised hypothesis should be developed and retested. Unsupportable hypotheses should be discarded.

## 6.2 Analysis of Mechanical Failure of Windings

**6.2.1 General.** To thoroughly analyze power transformer and shunt reactor failures, an understanding of the forces causing mechanical deformation is required (see Appendix B). The direction of forces and mechanisms of failure in core form transformers are different from the failure mechanisms in shell form transformers. Furthermore, different winding types, such as layer, disc, and pancake types, have different inherent strengths to resist conductor movement under short-circuit forces. The stiffness of the insulation system, the rigidity of the winding clamping system, the strength of the conductors, and the bulk elasticity of the coil play a role in determining the winding response to electromagnetic forces.

### 6.2.2 Winding Failure Modes for Core Form Transformers

**6.2.2.1 Radial Tension Failure (Hoop Tension Failure).** Forces directed radially outward can cause conductors to stretch. Moderate deformation can contribute to axial instability and collapse of the coil. Moderate deformation can also cause the conductor insulation to tear or separate. In extreme cases, the stretched conductor can break when the material elastic limit is exceeded.

**6.2.2.2 Radial Compression Failure.** Forces directed radially inward can cause conductor buckling or mechanical failure of the winding cylinder.

**6.2.2.3 Axial Compression Failure.** Opposing forces directed axially towards winding centers can cause collapse of the winding. If the conductors tilt, the winding becomes unstable and collapses.

**6.2.2.4 Axial Expansion Failure.** Opposing forces directed axially towards clamping plates can cause these plates to bend or break, or can cause jack bolts to bend or shear. The conductors will tend to separate at winding locations where currents flow in opposite directions. These forces can also cause conductors to tilt, allowing axial instability. Improper clamping or alignment may allow winding conductors to shift axially.

Ampere turn imbalances due to tap arrangements, multiple voltages, etc., may cause these forces. As a check, one can look at the impedance variation across the various connections for clues as to the magnitude of the imbalance.

**6.2.2.5 Axial Telescoping Failure.** This term is used in two ways: (1) to describe the movement of individual windings relative to one another (i.e., outer winding moving upward or downward relative to inner winding), and (2) to describe the axial instability of a single



Copyright The Institute of Electrical and Electronics Engineers, Inc.
Provided by IHS under license with IEEE
No reproduction or networking permitted without license from IHS
Not for Resale

winding (i.e., outer turns moving upward or downward relative to inner turns). Any mechanical failure of the clamping system would allow windings to move in opposite vertical directions relative to one another, thereby telescoping.

The axial instability of an individual winding could result from radial tension failure, radial compression failure, or from axial collapse. The result of these failures might cause conductors to slip over or under one another and collapse inward, thereby telescoping.

**6.2.2.6 End Turn Failure.** End turns experience combined radial and axial forces. The resultant of these forces tends to tilt the outside turns and twist the ends inward towards the core leg.

**6.2.2.7 Spiral Tightening.** Combined radial and axial forces can cause the entire inner winding to spiral and tighten, leading to circumferential displacement of the conductors and radial spacers.

### 6.2.3 Winding Failure Modes for Shell Form Transformers

**6.2.3.1 Radial Failures.** Small radial components of force can develop at the edges of the coil. When coil heights are tapered to obtain graded insulation, the radial forces are greater than usual. Also, the radial component of force is effected by the location of the taps in the windings. Forces directed radially outward can cause conductors to stretch.

**6.2.3.2 Axial Failures.** Within a given coil group (i.e., the high-voltage group), the axial forces are attractive, thus placing the conductors, insulation, and spacer blocks under compression. These forces exert beam stresses on the conductors, which try to bend the conductors between the spacer blocks. The axial forces between the coil groups of different windings (i.e., the high-voltage group and the low-voltage group) are forces of repulsion and try to force the coils against the ends of the core window laminations. These forces stress the major insulation between the winding and the core, and are extended through the core to the transformer tank. The axial forces of repulsion between coil groups load the tensile stress members in the tank and in the core and coil support T-beams.

## 6.3 Analysis of Electrical Failure

**6.3.1 General.** Transformer failure can be caused by transient surges. In such failures, the transformer insulation withstand should be checked with arrester discharge voltage to ensure proper insulation coordination. Lightning, overexcitation, switching surges, winding resonance, turn-turn shorts, layer-layer shorts, coil-coil shorts, partial discharges, insulation tracking, static electrification of oil, and flashovers are all forms of electrical failure modes. Once internal electrical failures occur, all fields are upset, and the force vectors become abnormal. Stresses are placed on materials in ways not anticipated. Under these circumstances, fault analysis becomes very complex. Often, the sequence of events, first causes, and original weaknesses may not be determined from inspection of the internal damage. External evidence such as relay targets, oscillograms, fault recorder charts, and transformer accessories typically provide the clues to analyze the fault sequences.

**6.3.1.1 Voltages in Transformer Windings and Associated Parts.** For purposes of analysis, there are several types of voltages that can exist in the windings and associated parts of a transformer. Some of these are

(1) *Normal low-frequency system operating voltages.* These are the generated ac system voltages appearing at the transformer terminals. These voltages can be expressed in rms value or crest value and depend on the transformer connections (delta or wye) for phase-to-phase or phase-to-neutral voltages.



Copyright The Institute of Electrical and Electronics Engineers, Inc.
Provided by IHS under license with IEEE
No reproduction or networking permitted without license from IHS
Not for Resale

(2) *Normal low-frequency induced voltages.* These are voltages induced in the windings by currents flowing in adjacent windings and conducting parts within the transformer or by dc components.

(3) *Abnormal low-frequency system operating voltages.* These voltages are the short-term ac voltages caused by overexcitation, unbalanced loading, or fault conditions that are typically removed from the system by operation of protective relay action.

(4) *Abnormal high-frequency system voltages.* These voltages are the transient voltages typically caused by lightning, part-winding resonance, system switching, or arrester operation. High-frequency voltages generally produce greater dielectric stress than do low-frequency voltages in the winding turns nearest to the transformer terminal connections.

(5) *Abnormal high-frequency and low-frequency voltages from other causes.* Examples of these are voltages that can arise from external solar or dc disturbances or internal fluid phenomena such as the possibility of charge separation on insulating surfaces, changes in electric field distribution due to particle initiated discharge, or progressive winding failures from developing turn-turn faults.

A variety of electrical overvoltage tests are performed in the manufacturer's factory to verify insulation system quality. Refer to IEEE C57.12.90-1987 [16] for a complete description.

**6.3.1.2 Function of the Insulation System.** The purpose of the insulation system is to electrically isolate windings and related live parts at different voltages from each other and from ground so that any current flowing between live parts is maintained at a very low and acceptable value throughout the life of the transformer. The failure of an insulating system to prevent the destructive current flow across the insulating space between live parts is called "dielectric breakdown."

The measure of the ability of an insulating system of material to resist dielectric breakdown is its dielectric strength. The dielectric strength (kV/cm) of a single insulating material or a system of different insulating materials is determined by measuring, under specific conditions, the voltage (kV) required for a given thickness (cm) of insulation material to experience dielectric breakdown.

The tests for determining the dielectric strength of a single insulating material generally utilize simple or uniform electric fields. The dielectric strength is simply some voltage (kV) function of the thickness (cm) and quality of the material being tested.

The design of tests by which the dielectric strength of a system of insulating materials and live parts is determined requires knowledge of the uniformity or nonuniformity of the electric field (kV/cm) impressed on the insulation system, the relative electric field (kV/cm) uniformity or nonuniformity developed in the insulating space, and the purity or quality of the materials themselves.

The electric field generated by the test electrodes is an inverse function of the radii of the electrodes (i.e., the smaller the electrode radius, the higher the field strength at the surface of the electrode).

In a uniform field, the ratio of the voltage stress in each material in an insulating system with two different materials in series is inversely proportional to the ratio of their dielectric constants (i.e., in an oil/solid system, the voltage stress in the oil is about twice that of the voltage stress in the solid).

In nonuniform systems, high dielectric constant solids produce greater reduction in field strength when they are located in a high electric field than when they are in a lower strength field.

In nonuniform fields, the dielectric strength (kV/cm) of oil is a complex function of the separation (cm) times a field factor ($n$). This field factor is a dimensionless quantity that approaches unity as the field approaches uniformity. Therefore, short separations with sharp edges have about the same dielectric strength as long separations with very uniform electrodes.



Copyright The Institute of Electrical and Electronics Engineers, Inc.
Provided by IHS under license with IEEE
No reproduction or networking permitted without license from IHS
Not for Resale

For the purpose of failure analysis, the quality of insulation components must be high and maintained properly for the transformer to withstand the voltages described in 6.3.1.1. Appropriate materials must be used, and new materials must have adequate test data to prove their effectiveness. The shapes of live metallic parts should be adequate for the strength of the insulation used. Bare conductors at high stress should be rounded. Bare conductors are likely points for the initiation of partial discharge and breakdown, particularly if they contain deep scratches or inadvertent sharp edges. Solids should be distributed properly to avoid stress concentrations that can lead to long-term failure.

In analysis of a failure, details of material placement, material selection, and material shapes should be evaluated as follows:

(1) An application of dielectric constants must be sufficient for the electrical stresses.
(2) Insulation materials must be adequate for the application.
(3) Electrode configuration should be smooth and generally rounded to reduce high stress concentrations. Scratches or sharp edges are likely points of initiation of partial discharges and subsequent breakdown.

**6.3.1.3 Mechanisms of Insulation Breakdown.** Insulation does not breakdown instantaneously. When some critical value of voltage is reached, the breakdown process begins. In insulating fluids, the two principal mechanisms of breakdown are streamer formation and dielectric breakdown. When streamers form, they carry an electrical charge from the conductor or electrode into the dielectric field, thus changing the field. The streamers act as extensions of the electrode. If the streamer is unable to continue, it may die out in favor of another streamer. If the streamer gets sufficiently close to the oppositely charged electrode, dielectric breakdown will occur.

In solid insulating materials, the two principal mechanisms of breakdown are partial discharge (corona) and avalanche breakdown. The breakdown may puncture the insulation material or may track (creep) over the surface of the insulation material. If the partial discharge has sufficient energy or sufficient temperature, then chemical decomposition of the insulating material can occur. Local spots of carbonization will form and lead to progressive insulation deterioration.

Impurities in the insulation system, such as conductive particles or inclusions, can lead to dielectric stress concentration producing partial discharges and delayed breakdown. To cope with this problem, insulating materials can be applied in layers. The number of impurities is usually small, and the size is small enough that it is statistically improbable that they will line up to cause a breakdown. The insulation materials have an adequate dielectric strength to withstand all normal and expected transient overvoltages.

**6.3.1.4 Causes of Insulation Deterioration.** Insulating materials may be degraded by moisture, contamination from conducting particles or chemical solvents, thermal aging, partial discharge (corona), and mechanical damage or weakening from vibration. A dielectric failure may actually be the result of a mechanical, thermal, or chemical cause, or a combination of these factors.

Insulation defects may result from improper assembly techniques or inherent material defects. These defects could consist of a burr on the conductor, a rough edge on a braze connection, or even unintentional damage to the conductor insulation. These defects could be intensified by coil vibration caused during shipment or normal operation. Older transformers may have been assembled using radial spacers with sharp edges, which eventually damage the conductor insulation.

### 6.3.2 Winding Failure Modes for Core Form Transformers

**6.3.2.1.** Electrical failures in core form transformers can include one or more of the following types of dielectric breakdown between winding components:



Copyright The Institute of Electrical and Electronics Engineers, Inc.
Provided by IHS under license with IEEE
No reproduction or networking permitted without license from IHS
Not for Resale

(1) Strand–strand
(2) Conductor–conductor
(3) Turn–turn
(4) Winding-to-ground
(5) Section-to-section on sectional windings
(6) Layer–layer
(7) Disc–disc
(8) Tap section–tap section
(9) Winding–winding
(10) Combinations of these components (in some cases)

**6.3.2.2.** The driving voltages behind any dielectric breakdown can range from a few volts to many kilovolts. The relative steady-state driving voltage magnitudes for various core form winding types are shown in Table 11 for transformers rated 15 kV and above. The initial

**Table 11**
**Relative Voltage Stresses in Core Form Transformers**

| Type of Winding Construction | Winding Component Stressed | Reference Figure | Relative Voltage Magnitude |
|---|---|---|---|
| (1) Single layer (cylindrical, barrel) | | | |
| (a) single conductors | conductors (or turns) | B3 | tens of hundreds of volts |
| (b) two or more strands per conductor | strand–strand | B4 | less than a few volts |
| (c) two or more strands per conductor | turn–turn | B4 | tens of hundreds of volts |
| (2) Multilayer | | | |
| (a) single conductors | layer–layer | B3 | hundreds to thousands of volts |
| (3) Spiral (helical) | | | |
| (a) multiple strands | strand–strand | B5 | few to tens of volts |
| (b) multiple strands | turn–turn | B5 | tens to hundreds of volts |
| (4) Continuous disc | | | |
| (a) single conductor | conductor (or turns) | B6 | tens to hundreds of volts |
| (b) single conductor | bottom or top crossovers | B6 | tens to hundreds of volts |
| (c) single conductor | disc–disc sections | B6 | hundreds to thousands of volts |
| (5) Interleaved disc | | | |
| (a) single conductor | conductor (or turns) | B7 | hundreds to thousands of volts |
| (b) single conductor | bottom or top crossovers | B7 | thousands of volts [approximately two times the voltage in 5(a)] |
| (c) single conductor | disc–disc sections | B7 | thousands of volts [approximately three times the voltage in 5(a)] |



Copyright The Institute of Electrical and Electronics Engineers, Inc.
Provided by IHS under license with IEEE
No reproduction or networking permitted without license from IHS
Not for Resale

transient driving voltage is apportioned across the various winding components according to the winding distributed capacitance values. A large capacitance to ground and a small capacitance between turns cause a larger voltage stress between turns near the line end of the winding. Windings with an electrostatic shield plate at the line end have a larger capacitance and a lower voltage stress across the first few turns. There are also other methods to achieve the same end. These include partially interleaved windings, fully interleaved windings, strand rings, and internally shielded disc windings.

### 6.3.3 Winding Failure Modes for Shell Form Transformers

**6.3.3.1.** Electrical failures in shell form transformers can include one or more of the following types of dielectric breakdown between winding components:

(1) Strand–strand
(2) Conductor–conductor
(3) Turn–turn
(4) Pancake–pancake
(5) Tap section–tap section
(6) Winding group–winding group
(7) Winding-to-ground
(8) Combinations of these components (in some cases)

**6.3.3.2.** The relative steady-state driving voltage magnitudes for various shell form winding components are shown in Table 12. The interleaving of the pancake winding construction provides a high series capacitance relative to the capacitance to ground, which serves to provide a more uniform initial voltage stress distribution.

**Table 12**
**Relative Voltage Stresses in Shell Form Transformers**

| Winding Component Stressed | Figure | Relative Voltage Magnitude |
|---|---|---|
| Strand–strand | B9 | less than a few volts |
| Conductor–conductor (turn-turn) | B9 | many hundreds of volts |
| Pancake coil–pancake coil at connection points | B9 | almost zero |
| Pancake coil–pancake coil at edges of end points | B9 | thousands of volts |

NOTE: Each conductor is assumed to consist of many individual strands. The conductor is wound to form one rectangular pancake coil.

**6.3.3.3.** To troubleshoot a winding failure, a winding development diagram can be obtained from the manufacturer, which shows the positioning of the pancake coils within the various series, common, and tertiary winding groups (or within the high-voltage and low-voltage winding groups). The number of turns in the various winding groups can also be obtained from the manufacturer.

With this diagrammatic information and numerical data, the nominal steady-state voltages existing between the ends of the winding groups and the leads or crossover connections can be determined.



Copyright The Institute of Electrical and Electronics Engineers, Inc.
Provided by IHS under license with IEEE
No reproduction or networking permitted without license from IHS
Not for Resale

**6.4 Analysis of Other Electrical Failures.** Other causes of transformer failure often include multiple grounded cores, shorted core bolts, high-resistance winding joints, and failed component parts such as tap changers, bushings, lead structures, and internal surge arresters. Failures can also occur in auxiliary transformers, pumps, and fans. Any of these may cause a unit to be taken out of service but not result in winding failure.

Other failure modes may result in tank deformation and weld cracks.

## 7. Bibliography

[B1] Bean, Chakan, Moore, and Wentz. *Transformers for the Electric Power Industry*, McGraw-Hill, 1959.

[B2] Bean, R. L. and Wentz, E.C. "Mechanical Forces in Interleaved Rectangular Pancake Transformer Coils," *AIEE Power Apparatus and Systems*. Aug. 1954, pp. 962–971.

[B3] Beavers, M. F. and Adams, C. M. "The Calculation and Measurement of Axial Electromagnetic Forces on Concentric Coils in Transformers," *AIEE Power Apparatus and Systems*. vol. 7B, Part IIIA, 1959, pp. 467–478.

[B4] Aicher, L. C. "Is Transformer Thru-Fault Capability Achievable?" Proceedings of the American Power Conference. vol. 33, 1971, pp. 1006–1012.

[B5] McNutt, Johnson, Nelson, and Ayers. "Power Transformer Short-Circuit Strength-Requirements, Design, and Demonstration," *IEEE Transactions on Power Apparatus and Systems*. PAS-89, no. 8, Nov. /Dec. 1970, pp. 1955–1969.

[B6] Wendahl, L. K. and Horne, I. J. "The Core-Form Transformer—Designed for Strength," *The Line*. McGraw-Edison Co., Winter 1975.

[B7] Wendahl, L. K. and Leamer, A. E. "Natural Strength--The Shell-Form Transformer Design," *The Line*. McGraw-Edison Co., First Quarter 1975.

[B8] Dakin, T. W. "Insulation Reliability Series," *IEEE Electrical Insulation Magazine*. Nov. 1985.

[B9] Waters, J. *The Short Circuit Strength of Power Transformers*, London: Macdonald, 1966.

[B10] Peek, F. W. *Dielectric Phenomena in High Voltage Engineering*, London: McGraw, 1929.



Copyright The Institute of Electrical and Electronics Engineers, Inc.
Provided by IHS under license with IEEE
No reproduction or networking permitted without license from IHS
Not for Resale

# Appendixes

(These appendixes are not a part of IEEE C57.125-1991, IEEE Guide for Failure Investigation, Documentation, and Analysis for Power Transformers and Shunt Reactors, but are included for information only.)

# Appendix A
# Transformer Tests

## A1. Insulation Resistance Tests

**A1.1 Megohm Meter Tests.** The purpose of this test in a transformer is to measure the condition of a "major" insulation system, i.e., the insulation between a winding and ground (core) or between two windings. The most common method to make this measurement is by measuring the resistance of the insulation using a megohm meter that applies a dc voltage and indicates the insulation resistance in megohms. The insulation resistance that is measured is a function of the leakage current that passes either through the volume of the insulation or over external leakage surfaces. It should be noted, therefore, that the measured resistance may be effected by such things as temperature, humidity, and external leakage paths such as dirty insulators or bushings. Megohm meters usually have the capability of applying 500, 1000, or 2500 V dc. (If, when stressing insulation near its rated voltage, the resistance value shows a tendency to steadily decrease with time at a constant voltage, this is an indication that the insulation is failing.) If the voltage rating of the insulation being tested is above the rating of the megohm meter, a two-voltage test can be used often to reveal the presence of moisture. If the difference between two readings at 500 V and 2500 V exceeds 25%, it indicates the possible presence of moisture in the insulation system. This possibility should be confirmed with additional tests such as polarization index, insulation power factor, moisture content of oil, ASTM D1816-1990 [7] dielectric tests, or other tests recommended by the manufacturer. Minimum insulation values for one minute resistance measurements for transformers may be determined by using the following formula[8]:

$$R = \frac{CE}{\sqrt{\text{kVA}}} \qquad \text{(Eq 1)}$$

where

$R$ = insulation resistance, in MΩ
$C$ = 1.5 for oil-filled transformers at 20 °C, assuming that the transformer's insulating oil is dry, acid free, and sludge free
= 30.0 for untanked oil-impregnated transformers
$E$ = voltage rating, in V, of one of the single-phase windings (phase-to-phase for delta connected transformers and phase-to-neutral for wye connected transformers)
kVA = rated capacity of the winding under test (If the winding under test is three-phase and the three individual windings are being tested as one, the rated capacity of the complete three-phase winding is used.)

Megohm meter test results below this minimum value would indicate probable insulation breakdown. A megohm meter test that indicated zero or a very low value of ohms would indicate a grounded winding, a winding-to-winding short, or heavy carbon tracking.

[8]Reprinted with permission from [25].



Copyright The Institute of Electrical and Electronics Engineers, Inc.
Provided by IHS under license with IEEE
No reproduction or networking permitted without license from IHS
Not for Resale

**A1.2 Polarization Index Tests.** The purpose of the polarization index test is to determine if equipment is suitable for operation or even for an overvoltage test. The polarization index is a ratio of the megohm resistance at the end of a 10 min test to that at the end of a 1 min test at a constant voltage. As with the measurement of insulation resistance, a voltage near line voltage is most desirable.

The total current that is developed when applying a steady state dc voltage is composed of three components:

(1) *Charging current* due to the capacitance of the insulation being measured. This current falls off from maximum to zero very rapidly.
(2) *Absorption current* due to molecular charge shifting in the insulation. This transient current decays to zero more slowly.
(3) *Leakage current*, which is the true conduction current of the insulation. The leakage current varies with the test voltage. It may also have a component due to the surface leakage that is due especially to surface contamination.

Since leakage current increases at a faster rate with moisture present than does absorption current, the megohm readings will not increase with time as fast with insulation in poor condition as with insulation in good condition. This results in a lower polarization index. An advantage of the index ratio is that all of the variables that can effect a single megohm reading, such as temperature and humidity, are essentially the same for both the 1 min and 10 min readings. The polarization index test is performed generally by taking megohm readings at the following intervals at a constant dc voltage: 1 min and then every minute up to 10 min. The polarization index again is the ratio of the 10 min to the 1 min megohm readings. The following are guidelines for evaluating transformer insulation using polarization index values:

| Polarization Index | Insulation Condition |
|---|---|
| Less than 1 | Dangerous |
| 1.0 – 1.1 | Poor |
| 1.1 – 1.25 | Questionable |
| 1.25 – 2.0 | Fair |
| Above | 2.0 Good |

## A2. Transformer Turns Ratio

The purpose of a turns ratio test basically is to diagnose a problem in the minor or winding turn-to-turn and section-to-section insulation system in a transformer. This test will detect primarily inner winding short circuits or tap changer alignment problems; however, if exciting current is also measured, such things as high resistance due to loose connections or grounded conductors may possibly be detected. The most widely used instruments for turns ratio testing are very convenient for field testing. They have a hand crank power supply, with the voltages commonly used being very low, such as 8–10 V and 50–60 Hz, so that the test may be performed on a transformer even if the oil is removed. Two windings on one phase of a transformer are connected to the instrument, and the internal bridge elements are varied to produce a null indication on the detector, with exciting current also being measured in most cases. Measured ratios should compare with ratios calculated from nameplate voltage to within 0.5%, but should compare even closer to actual benchmark values.



Copyright The Institute of Electrical and Electronics Engineers, Inc.
Provided by IHS under license with IEEE
No reproduction or networking permitted without license from IHS
Not for Resale

If there are shorted winding turns, the measured ratio will be effected. Out-of-tolerance ratio measurements may be symptomatic of shorted turns, especially if there is an associated high excitation current. Out-of-tolerance readings should be compared with prior tests because, in some instances, the design turns ratio may vary from the nameplate voltage ratio on some taps because of the need to utilize an incremental number of winding turns to make up the taps while the nameplate voltage increments may not exactly correspond. This error may combine with measurement error to give a misleading out-of-tolerance reading.

If the number of turns in the individual windings is known, the measured ratio error should be used to see if it will relate to a number of shorted turns. If the ratio of output-to-input voltage is higher than calculated, the measured ratio should be multiplied by the number of turns in the output winding to obtain the number of turns in the input winding. If the ratio of output-to-input voltage is lower than calculated, the measured ratio should be multiplied by the number of turns in the input winding to obtain the number of turns in the output winding.

As indicated, many instruments commonly used for turns ratio measurement in the field apply a very low voltage to the excited winding. There have been experiences in which unstable readings around the correct ratio have been obtained on transformers that otherwise appeared to be in serviceable condition. These experiences are caused usually by the influences of stray voltages induced into the windings being measured. One common experience of this effect is when there is a line drop compensator CT in the measured winding that is paralleled with a similar CT in an operating transformer. Care should be taken to ensure that all CTs are either shorted and grounded or connected to passive devices that are not introducing minute voltages into the measurements.

Open turns in the excited winding will be indicated by very low exciting current and no output voltage. Open turns in the output winding will be indicated by normal levels of exciting current, but no or very low levels of unstable output voltage.

Ratio measurements should be made on all taps to confirm the proper alignment and operation of the tap changers. It should be noted that, on transformers with load tap changers that operate on positions bridging two tap contacts (check the nameplate chart for tap connections), there will be a circulating current in the tap section being bridged. This circulating current is limited in some manner, usually by a reactor or resistance device. The losses due to this circulating current will cause an increase in exciting current and some voltage regulation. It is therefore important to have prior data with the measurement system employed to properly analyze these transformers.

The turns ratio test may also detect high-resistance connections in the lead circuitry or high contact resistance in tap changers by higher excitation current and a difficulty in balancing the bridge.

## A3. Single-Phase Low-Voltage 60 Hz Excitation Test

This test is very useful in assessing the condition of a transformer, especially when a localized failure in the winding or magnetic circuit may be present. To realize the full potential of these tests, "signature" tests should be performed before putting the transformer in service. These signature values, along with a detailed description of the instruments used, the connections, test leads, temperatures, and applied voltages should be recorded and maintained for use in future analyses.

The voltage level should be no more than 10% (e.g., 120, 240, or 440 V) of rated voltage and should be applied normally to the high-voltage winding to avoid inducing levels of voltage that may be hazardous under the test conditions.

Single-phase digital wattmeters that will accept up to 600 V are available today and are very useful in making these tests if the applied voltage is within this range. In addition to voltage and current readings, the watt readings they provide have been found to be especially useful in diagnosing localized faults in windings or core structures, which create additional losses. The watt readings are less effected by random effects, such as residual core magnetism, but are heavily influenced by losses associated with fault currents within the winding or



Copyright The Institute of Electrical and Electronics Engineers, Inc.
Provided by IHS under license with IEEE
No reproduction or networking permitted without license from IHS
Not for Resale

magnetic circuit. The usefulness of these tests is greatly improved if an adjustable power supply is used to excite the winding so that the exact voltage applied in the signature tests can be maintained on each phase and on subsequent tests.

On single-phase transformers, the excitation current is measured by first placing a sensitive ammeter in the H2 lead with the H1 lead energized; and then changing the polarity, energizing the H2 lead, and measuring the current in H1. Results between similar units should not vary more than 10%. Results compared to previous tests made under the same conditions should not vary more than 5%. On three-phase transformers, the results recorded on individual phases may also be compared. The test is performed by connecting the polarity of the test device to each bushing in turn, while connecting nonpolarity of the test transformer to a second bushing and grounding the third bushing. For Y-connected windings, the polarity of the test transformer is connected to the phase bushing, the nonpolarity of the test transformer is connected to the neutral, and a current measurement is read. For three-phase core form transformers, a pattern of two similar currents and one low current is expected. The lower current for one of the phases, usually H2 to H0 for a Y-connected winding and phase H1 to H2 for a delta-connected winding, is associated with the winding wound on the center leg of a three-legged core. The magnetic reluctance of this phase is lower than the other two phases, and lower excitation current therefore results.

The test values on the outside legs should be within 15% of each other, and values for the center leg should not be more than either outside leg. Results compared to prior tests made under the same conditions should not vary more than 5%.

If the limits suggested above are exceeded, the manufacturer or a qualified representative should be consulted because it is often possible, with knowledge of the construction and additional tests, to localize and further identify the source of the fault. It is possible that core joint variation or capacitance of high series capacitor windings will cause this relationship to vary. These additional tests consist of alternately shorting out one of the phases not being directly excited while recording exciting current, and additionally making tests while paralleling the phases not being directly excited on Y-connected windings.

Exciting current readings may be effected by residual magnetism in the core. If an out-of-tolerance reading is experienced while turns ratio, winding resistance, and impedance tests are normal, residual magnetism should be suspected. Residual magnetism may be eliminated or reduced by applying a dc voltage to the windings through a voltage divider. The voltage should be raised from zero to a maximum value that will yield a current of no more than 10 A through the winding and then returned to zero. Care must be taken not to break the circuit while dc current is flowing in the winding. The polarity should then be reversed and the procedure repeated. Repeat the process several times, each time reducing the magnitude of current and each time reversing the polarity. The excitation current test should then be repeated.

## A4. Insulation Power Factor

Measurement of insulation power factor consists of applying a 60 Hz ac voltage, with a value up to its rated voltage, to the insulation system in question. Any insulation system can be represented by a capacitance and resistance in parallel. The power factor of the system is essentially a measurement of the leakage current through the equivalent insulation system resistance. The lower the leakage current, the lower the power factor and the better the insulation system.

Measurement of power factor has advantages over measurement of dc resistance (MΩ) of the insulation system. In the dc test, good insulation in series with bad insulation will cover up detection of the bad insulation. Also, the power factor measurement does not vary due to the volume of the insulation system being tested. A negative power factor is an indication of tracking across the insulation system.

The power factor of an insulation system should not increase with an increase in applied ac voltage. If it does increase as the ac voltage is increased, there is a problem in the insulation system.



Copyright The Institute of Electrical and Electronics Engineers, Inc.
Provided by IHS under license with IEEE
No reproduction or networking permitted without license from IHS
Not for Resale

Another value of the power factor measurement is that it will detect voids in the insulation system that may be causing high partial discharges.

It is very important that power factor measurement instrumentation be well shielded if it is used in a substation area where there may be a significant level of electrostatic interference. Using a higher frequency power supply may help solve the interference problem.

Values obtained at the time of the original tests are used as benchmarks to determine the amount of insulation deterioration on subsequent tests. Insulation power factor is best compared to these benchmark values when performing field tests. However, it is also possible to determine a degree of winding insulation condition by comparing test results to other similar units.

For more information on power factor testing, refer to Section 10.9 of IEEE C57.12.90-1987 [16].

## A5. Winding Resistance

Resistance measurements can be used to check for proper connections and to determine if an open circuit condition or a high-resistance connection exists in parallel conductor windings. On three-phase transformers, measurements are made on the individual windings from phase to neutral, when possible. On delta connections, there will always be two windings in series, which are in parallel with the winding under test. Therefore, on a delta winding, three measurements must be made to be able to calculate each individual winding resistance.

Since the resistance of copper varies with temperature, all test readings must be converted to a common temperature to give meaningful results. Most factory test data is converted to 85 °C. This has become the most commonly used temperature. The formula for converting resistance readings on copper windings is as follows:

$$R \text{ at winding temperature in °C} = R \text{ at test} \cdot \frac{234.5 + \text{test temperature in °C}}{234.5 + \text{winding temperature}} \qquad \text{(Eq 2)}$$

For transformer windings made of aluminum instead of copper, the value of 234.5 should be replaced by 225 in the above formula. Because field measurements make it unlikely that precise temperature measurements of the winding can be made, the expected deviation for this test in the field is 5.0% of the factory test value.

Precision in field measurements using digital instruments is effected by the presence of stray fields of relatively low concentration. Additionally, all dc measurements are effected by the winding capacitance. It can take an hour or more on an EHV transformer to get a single valid resistance reading. Therefore, comparison of readings with other phases or with a duplicate transformer has much more significance.

## A6. Oil Testing

**A6.1 Dielectric Breakdown.** The measure of the dielectric strength of an insulating liquid is the minimum voltage at which electrical flashover occurs between two metallic electrodes. A low dielectric strength indicates contamination of the liquid with such things as water, carbon, and/or other foreign matter. It should be noted, however, that high dielectric strength is no guarantee that the liquid is not contaminated. Tests on oil from a failed transformer are not indicative of the oil quality just before failure because carbon and debris from the failure will be suspended in the oil.

Two ASTM test methods are in common use in the power utility industry. The ASTM D877-89 [2] method uses 1 in diameter flat disc electrodes, which are separated by a distance of 0.10 in, and a rate of rise of 3 kV/s ±20% is applied to the test sample. The ASTM D1816-90 [7] method uses spherical electrodes with a spacing of either 0.08 in or 0.04 in and a rate of rise of the test voltage of 1/2 kV/s ±20%, and incorporates stirring of the liquid sample. The mini-



Copyright The Institute of Electrical and Electronics Engineers, Inc.
Provided by IHS under license with IEEE
No reproduction or networking permitted without license from IHS
Not for Resale

mum values for continued use of transformer oil are listed in IEEE C57.106-1991 [21]. The D1816-90 [7] test is more sensitive to moisture than the D877-89 [2] test.

**A6.2 Interfacial Tension (see ASTM D971-92 [3]).** The interfacial tension (IFT) of an oil is the force in dyn/cm required to rupture the oil film existing at an oil-water interface. IFT is one of the earliest indications of the degradation of an oil. When certain contaminants such as soaps, paints, varnishes, and oxidation products are present in the oil, the film strength of the oil is weakened, thus requiring less force to rupture. For oils in service, a decreasing value indicates the accumulation of contaminants, oxidation products, or both. Acceptable limits for IFT vary with operating voltage. They are listed in IEEE C57.106-1991 [21].

**A6.3 Moisture Content (see ASTM D1533-88 [5]).** A low moisture content is necessary to obtain and maintain acceptable electrical strength and low dielectric losses in insulation systems. The presence of excessive moisture may not be evident from electrical tests. The presence of excessive moisture accelerates metal corrosion and shortens the life expectancy of cellulose insulation. Water-in-oil limits for continued use are listed by voltage levels in IEEE C57.106-1991 [21]. The taking and handling of oil samples must be done with care to avoid misleading high readings.

**A6.4 Color.** The color test compares the oil with standards of colored glass. The color of a new oil is generally accepted as an index of the degree of refinement. New oils are usually bright and clear. A change in color of an oil in service indicates contamination and/or deterioration during service. Clear oil (low color numbers) allows visual inspection of internal equipment components. Additional tests should be made on any oil with a color number over four to determine whether the oil is an operating hazard. ASTM D1500-91 [4] is available for laboratory testing, and ASTM D1542-60 [6] is useful in the field.

## A7. Low-Voltage Impulse Testing

Low-voltage impulse testing can be used to detect mechanical movement in a transformer winding due to shipping or a short circuit. The test requires the use of a portable impulse generator and cathode ray oscilloscope. The low-voltage impulses are applied to a transformer winding, with the voltage waveforms that are produced are recorded.

Interpretation of field low-voltage impulse tests is much like factory impulse tests as described in IEEE C57.98-1986 [19], and requires a background of field test experience. The essence of the test method is the comparison of sets of measurements made on the same transformer before and after shipping or a period of service. In general, two basic phenomena seem to be related to changes occurring in the winding. Using a differential circuit, a large change in magnitude seems to indicate radial movement, while shifts in phase seem to indicate one of the phases has moved axially.

For more detailed information on impulse testing, refer to IEEE C57.12.90-1987 [16].

## A8. Induced Voltage Test

The ac induced voltage test is performed in the field, as it is a key factory test, to verify the turn-to-turn, layer-to-layer, and section-to-section insulation of the windings of a transformer. However, the use of an induced voltage test is very limited due to the size and cost of the test equipment required. For large power transformers, this equipment might include a large motor generator set, a step-up transformer, a tuning transformer to get a higher frequency in the range of 150-400 Hz (so as not to saturate the core when applying a voltage beyond the normal rating of the transformer), and power factor correction reactors.

The test voltage level should be determined with agreement from the manufacturer, if practical. The maximum level suggested is the lesser of 150% of operating voltage or 85% of the



Copyright The Institute of Electrical and Electronics Engineers, Inc.
Provided by IHS under license with IEEE
No reproduction or networking permitted without license from IHS
Not for Resale

original factory test values. Levels less than this may be appropriate on a transformer that has been giving evidence of distress at operating voltage, especially when the test is performed in conjunction with partial discharge detection instrumentation.

A transformer is considered to have successfully completed the test if the current flowing during the test does not exceed the expected excitation current, and there is no other evidence of failure such as an audible noise, smoke, bubbles in the oil, or an unacceptable partial discharge level. Partial discharge (PD) testing is the most valuable method of detecting insulation problems during an induced voltage test. There now are two basic methods that can be used in field PD testing.

**A8.1 Radio Influence Voltage Method (RIV).** This method is used most commonly in factory induced voltage testing and is described in IEEE C57.12.90-1987, Section 10.8 [16].

Since field conditions may lead to high and erratic levels of ambient RIV, it is usually advisable to perform this test in conjunction with a long duration test of 30–60 min at a level consistent with the age and service exposure of the transformer. A level of from 100% to 125% of operating voltage is usually sufficient for diagnostic purposes. A commonly accepted RIV limit for field testing is 500 $\mu$V or less. In addition, the microvolt level should not increase more than 25% for a sustained 1 min period. The overall trend should be level or downward.

**A8.2 Acoustic Emissions Method (AE).** This method has been developed specifically for field testing of liquid-filled transformers and is thoroughly discussed in PC57.127[9]. A detected pulse count rate of 10 000 pulses per second measured during an induced voltage test would be a cause for further investigation.

## A9. Single-Phase Impedance Test

IEEE C57.12.90-1987 [16] prescribes the method for single-phase impedance measurement on both single-phase and three-phase transformers by short circuiting any winding and by applying sufficient voltage to circulate rated current.

**A9.1 Single-Phase Transformers.** To perform impedance tests at reduced current on any transformer, one winding of the transformer is energized while another winding on the same core leg is short-circuited with a low-impedance conductor. In most cases, single-phase voltage is applied, which is sufficient to circulate 2 A through the winding, and will produce accurate results because the impedance relationship on rated tap, current, and voltage measurements are made.

The percent impedance of a single-phase transformer can be calculated using the following formula:

$$\%Z = \frac{1}{10} \cdot \frac{E_{\text{measured}}}{I_{\text{measured}}} \cdot \frac{\text{kVA single phase}}{(\text{kV})^2 \text{ terminal to terminal}} \qquad \text{(Eq 3)}$$

**A9.2 Three-Phase Transformers.** The single-phase formula may be applied to single-phase tests on the three legs of a three-phase transformer. These percent $Z$ measurements will not match factory test data, but should be equal on each phase.

**A9.3 Three-Phase Results Equal to Factory Tests.** The three-phase percent $Z$ of a transformer can be calculated from the following formula:

[9]This authorized IEEE standards project was under development and was not available at the time this went to press.



Copyright The Institute of Electrical and Electronics Engineers, Inc.
Provided by IHS under license with IEEE
No reproduction or networking permitted without license from IHS
Not for Resale

$$\%Z = \frac{1}{60} \cdot \left( \frac{E_{12}}{I_{12}} + \frac{E_{23}}{I_{23}} + \frac{E_{31}}{I_{31}} \right) \cdot \frac{\text{kVA}_{3\ \text{phase}}}{\text{kV}^2_{\text{LL}}} \qquad \text{(Eq 4)}$$

The neutral connection is not involved. This method will produce measurement values equal to factory test data as long as no coil movement has occurred. Changes of ± 2% are usually not considered significant.

## A10. Core Ground Resistance

The insulation resistance from core to ground should read 1000 MΩ for a new unit; however, readings as low as 50 MΩ may be acceptable if there is no other evidence of core movement or mechanical damage. In shell form transformers, it is not important that the laminations be grounded in only one spot because the flux distribution in this type of transformer differs from core form transformers. However, the core ground insulation test may be desirable if a shell form design is grounded in a single location.

## A11. Applied Voltage Test (High Potential)

This test basically stresses the major insulation of the winding being tested. Also tested, however, is the insulation-to-ground of current carrying parts such as tap changers, leads, current transformers, and bushings. The core is not excited.

Normally, a source of 60 Hz ac, in the range of 65% to 75% of the factory applied voltage test values, is used. The applied voltage level is determined by the lowest BIL of the windings or terminals as found on the nameplate or factory test sheet. For windings such as an autotransformer and a grounded-wye winding with graded insulation at the neutral end, the test voltage will be limited to the capability of the lowest portion of the winding. The winding under test has all of its terminals connected together and connected to the ac source with all other winding terminals connected together and grounded.

This test is a proof test that stresses the major insulation in a manner that is not consistent with operating stresses. It is also a test that does not lend itself to quantitative evaluation, but introduces a finite risk for a destructive test failure on a transformer that might otherwise be serviceable. Since power factor and insulation resistance tests provide quantitative measurements without the risk of damaging otherwise serviceable insulation, there is usually little justification for performing this test in a field analysis.

Another question that often arises concerning this test is the possibility of substituting a dc source for the applied voltage. The use of dc is sometimes recommended on components with uniform insulation structures, such as cable or bus work, because it allows the use of smaller power supplies and a somewhat quantitative evaluation by measurement of the leakage current. In transformers, the insulation structures are usually complex combinations of materials with widely varying electrical characteristics. These structures were designed for ac voltages, which divide according to the dielectric constants of the individual components while dc voltages divide according to the resistivity of the individual components. Without a detailed analysis of the complete insulation structure, it can never be stated for certain whether or not some part of the insulation may be overstressed by a dc applied voltage test. Also, with a dc source applied for a period of time, there is a tendency for foreign particles in the oil to line up and possibly reduce the dielectric strength of the oil.



Copyright The Institute of Electrical and Electronics Engineers, Inc.
Provided by IHS under license with IEEE
No reproduction or networking permitted without license from IHS
Not for Resale

# Appendix B
# Transformer Construction

## B1. Types of Transformer Windings

Only the circular concentric and rectangular coil winding types used in core form transformers and the pancake type windings used in shell form transformers are discussed in this guide. The circular concentric windings include the layer (cylindrical), disc, and spiral (helical) types.

**B1.1 Winding Design Features.** Transformer manufacturers now rely on computer calculations to determine the radial and axial forces resulting from short-circuit currents. Judicious material selection and careful structural designs have demonstrated an improved ability of coils and components to withstand through faults.

Usual winding design features for core form transformers include

(1) Sufficient spacer blocks to minimize conductor beam stress
(2) Complete (not fractional) turns
(3) Uniform windings
(4) Axial alignment of windings
(5) Alignment of winding magnetic centers
(6) Balanced ampere turn distributions between inner and outer windings and matching of ampere turn voids at tap section
(7) Use of thermosetting adhesives to restrain conductor movement

Usual winding design features for shell form transformers include

(1) Sufficient spacer blocks on insulation washers between pancake coils to minimize conductor beam stress
(2) Use of multiple hi-low coil groups to reduce force magnitudes
(3) Close fitting tank sections to restrain movement of iron laminations and coil groups
(4) Wedge design coil supports for tight coils
(5) Use of thermosetting adhesives to restrain conductor movement at weak force locations where blocking is less effective

Shunt reactors operate at lower flux densities and thus have lower force magnitudes acting on the windings. These windings tend to be either layer or disc wound types.

### B1.2 Forces Acting Upon Coils, Core, and Structures

**B1.2.1 Core Form Coils.** In two-winding core form transformers, the leakage flux field between the concentric windings reacts with short-circuit currents in the windings. The principal component of leakage flux is axial, and its interaction with the circumferential winding currents produces radial forces acting in the outward direction on the outer winding and in the inward direction on the inner winding. For layer-type windings, the maximum value of radial force acting on a winding turn usually or frequently occurs midway along the winding height, where the total leakage flux is axial. Near the ends of the winding, the leakage flux bends towards the core leg to shorten its return path and causes a radial flux component. The interaction of this radial flux component with the circumferential winding currents produces axial forces that tend to compress the winding conductors along the vertical axis. In general, all imbalances in ampere turn distribution between inner and outer windings along the axial



Copyright The Institute of Electrical and Electronics Engineers, Inc.
Provided by IHS under license with IEEE
No reproduction or networking permitted without license from IHS
Not for Resale

length of the windings tend to increase the axial forces. An ampere turn void in one winding, such as might be caused by a tap section, may need to be balanced by a reduction of ampere turns in the other winding opposite to the taps. A misalignment of magnetic centers between two windings causes the strongest influence on radial flux and axial force. Even a small misalignment causes significant axial forces.

The axial forces that occur in transformer windings are the result of several components. These components include the forces that occur as a product of the cross flux and the fault currents flowing in the windings, and also the force resulting from misalignment of conductors. In actual transformers, in all operating conditions, these forces are not balanced. Because their forces are not balanced, the windings have a tendency to move in an axial direction that will increase the displacement.

Adequate end support structures must be designed to resist the combined forces. If static plates or corona shields are present at the end of the windings, they need to be very rigid to resist end turn forces. Supporting elements must be properly aligned to maintain equal stress distributions.

**B1.2.2 Concentric Circular Windings (see Fig B1).** The axial direction is oriented vertically and is coincident with the iron core. The radial direction is oriented horizontally and is perpendicular with the iron core. In circular coils, any radial forces tend to be distributed uniformly along the circumference of the coil. (For rectangularly or elliptically shaped coils, radial forces tend to concentrate at the "corners" of the coils and cause greater stresses in these regions.)

With concentric cylindrical windings, the current in the outer winding flows in a direction opposite to the current flowing in the inner winding. These opposing currents produce radial electromagnetic forces that tend to separate the outer and inner windings.

In the axial direction, winding forces are directed from the top and bottom of a winding inward towards its magnetic center, approximately in the middle of its length. Since perfect alignment of the inner winding and outer winding magnetic centers is virtually impossible, axial forces will result. Furthermore, a voltage tap in one winding will cause a displacement of its magnetic center. The misalignment of winding magnetic centers creates axial forces tending to move one coil or coil part upwards and the other coil or coil part downwards.

(1) *Radial Forces.* Radial forces are resisted by the strength of the winding conductors and, in some cases, the winding tubes. In the latter case, the stresses in the conductors are dependent on the distances between axial spacers.
(2) *Axial Forces.* Axial forces are resisted by the stiffness of the radial spacers and the beam strength of the conductors.

Conductor groups consisting of continuously transposed conductors tend to be less stable under compressive axial forces. Thermosetting adhesives are used to help bind the individual conductors into rigid rectangular groups.

Axial forces are resisted by the clamping plates, end frames, tie rods (or bars), stiff radial spacers, and inherent conductor beam strength.

**B1.2.3 Rectangular Concentric Windings (see Fig B2).** Mechanical forces generated in rectangular coil transformers are similar to those in circular coil transformers. The rectangular transformer has an iron core with a rectangular cross-section and has a set of windings assembled on a rectangular insulating form. The axial direction is vertical and is coincident with the core. The radial direction is horizontal and is perpendicular to the core.

The windings used in rectangular coil construction consist of spirally wound sheet conductor, multiple layer strap conductor, or individually insulated (rectangular or wire) conductor. Aluminum and/or copper conductors may be used, depending on design requirements.



Copyright The Institute of Electrical and Electronics Engineers, Inc.
Provided by IHS under license with IEEE
No reproduction or networking permitted without license from IHS
Not for Resale

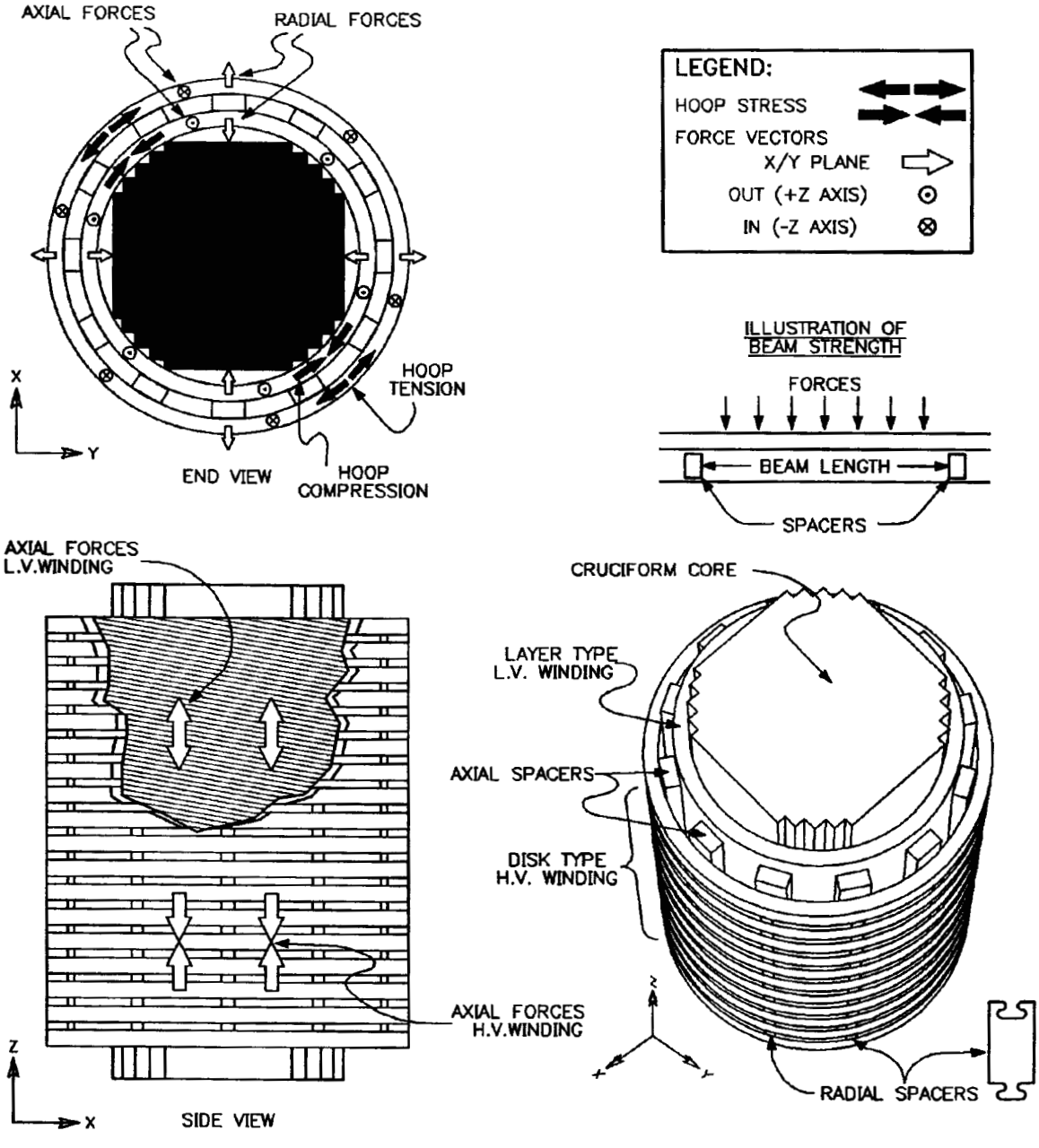


**Fig B1**
**Forces Acting on Both the HV and LV Windings of a Simplified Two-Winding Core-Type Transformer During Through Fault Conditions**



Copyright The Institute of Electrical and Electronics Engineers, Inc.
Provided by IHS under license with IEEE
No reproduction or networking permitted without license from IHS
Not for Resale

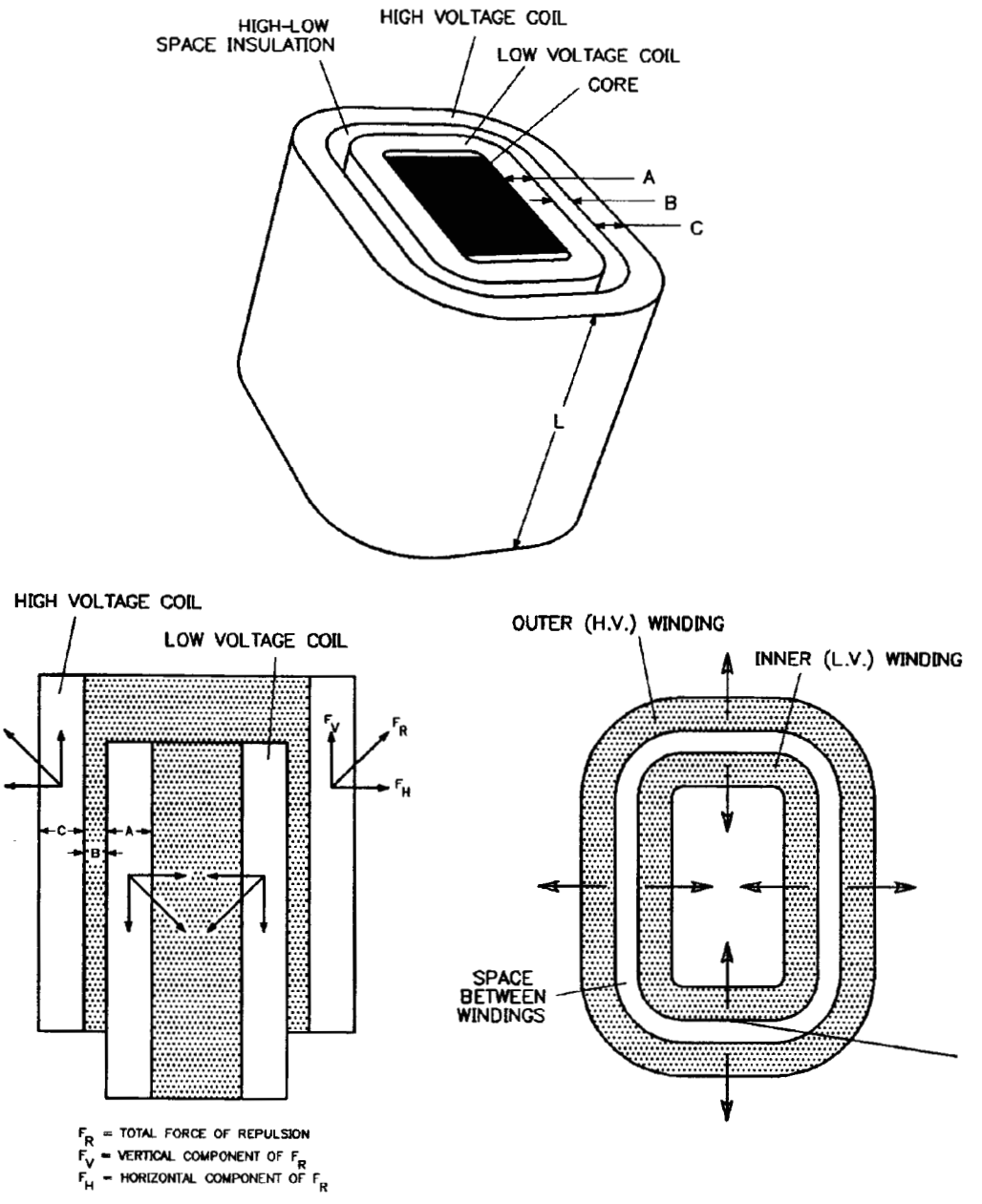


**Fig B2**
**Forces Acting on Both the HV and LV Windings of a Simplified Rectangular Two-Winding Core-Type Transformer During Through Fault Conditions**



Copyright The Institute of Electrical and Electronics Engineers, Inc.
Provided by IHS under license with IEEE
No reproduction or networking permitted without license from IHS
Not for Resale

(1) *Radial Forces.* The radial forces tend to separate the inner winding from the outer winding. The inner winding tries to crush the rectangular insulating form. The outer winding tries to arch or bow away from the flat surfaces of the inner winding. This action tends to increase the impedance of the transformer and places mechanical stress on the end frames and phase-to-phase insulation.

(2) *Axial Forces.* The axial forces tend to lift one winding upwards relative to the other. The only mechanical restraints against this upward action are the top core yoke, the top yoke clamps, and the blocking wedges or members within the core window. No adjustable mechanisms are used. Some manufacturers use a thermosetting adhesive on the windings to bond the insulation and the coil conductors together so that LV sheet windings axial forces are minimized.

**B1.2.4 Layer (Cylindrical or Barrel) Winding (see Figs B3 and B4).** This winding consists of one or more layers of insulated conductors wound upon an insulated cylinder, similar to the way thread is wound upon a spool. The conductor may consist of single or multiple parallel strands or continuously transposed cable. The layers may be wound on top of each other to obtain the designed volts-per-turn level. With more than two winding layers connected in series, the voltage stress between layers is only a fraction of the full line voltage. Therefore, the layer-to-layer insulation is only a small part of that necessary for full rated voltage.

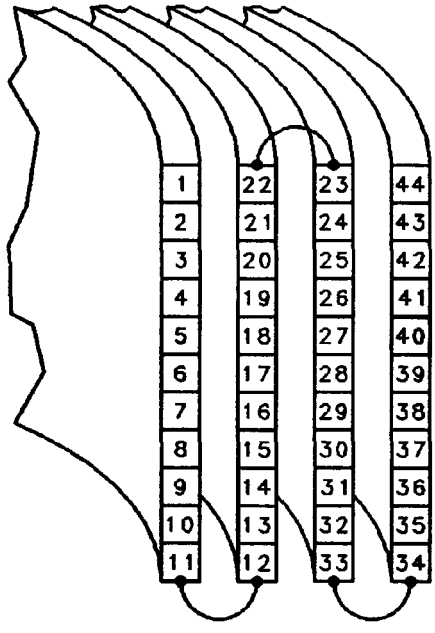


**Fig B3**
**Multilayer (Cylindrical) Windings**

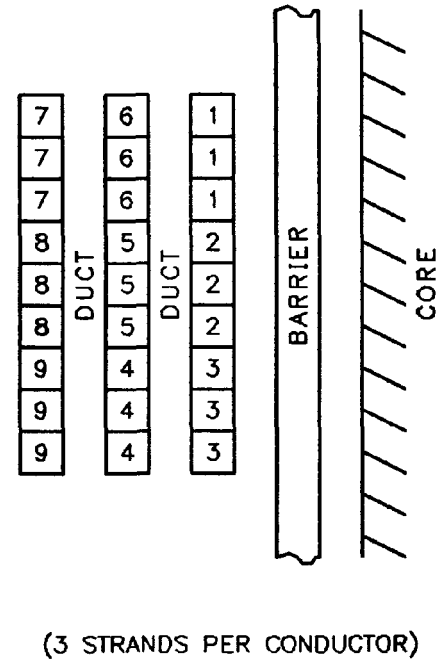


**Fig B4**
**Layer Windings**



Copyright The Institute of Electrical and Electronics Engineers, Inc.
Provided by IHS under license with IEEE
No reproduction or networking permitted without license from IHS
Not for Resale

The foundation for the layer winding may be a cylinder of high mechanical and dielectric strength. The conductors are wound tightly under tension with axial pressure maintained as the layer turns progress. Oil duct assemblies are added between some layers, and the layers terminate in end rings of high compressive strength. Low-voltage, high-current layer windings consist of multiple strands per turn layer. They are applied at a slight angle to the winding cylinder radius in order to obtain the pitch necessary to wind the turns. Special blocking at the ends of the windings must be used to match a pitch of the turns, and special methods must be used to prevent axial collapse failure. Radial spacers are not used in layer winding construction.

**B1.2.5 Spiral (Helical) Winding (see Fig B5).** This winding consists of many insulated conductors in parallel, oftentimes two strands wide and many (6 through 20) strands high, spirally wound on an insulating cylinder from one end to the other. Continuously transposed cable may also be used. It visually resembles a coil spring. The spiral winding design consists only of a single layer; however, two layers are often connected in series based on the voltage class. It is used for low-voltage, high-current applications. It is usually necessary to transpose the strands radially in a spiral winding in order to balance the currents in the parallel conductors to prevent high stray losses. This winding has inherently good surge voltage distribution characteristics for the voltage ranges used. The conductors are wound over axial spacer strips that maintain an oil duct between the coils and the winding cylinders. Radial spacers are used to separate the individual turns. The end leads are normally keyed to the winding tube to prevent spiral tightening of the coil during through faults.

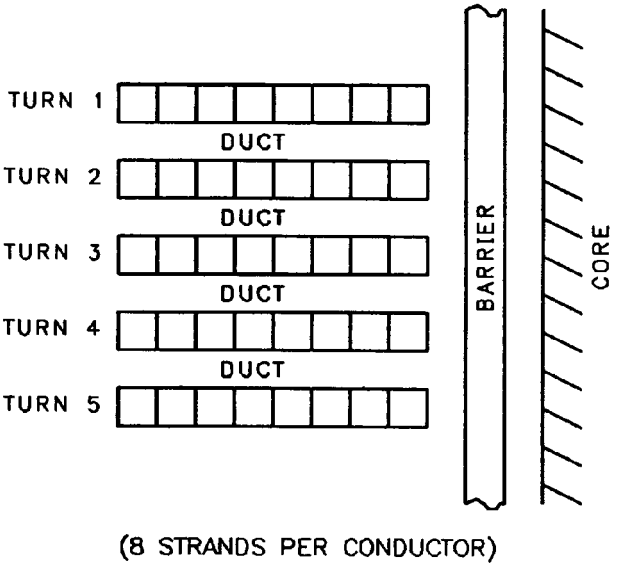


**Fig B5**
**Spiral (Helical) Windings**



Copyright The Institute of Electrical and Electronics Engineers, Inc.
Provided by IHS under license with IEEE
No reproduction or networking permitted without license from IHS
Not for Resale

**B1.2.6 Continuous Disc Winding (see Figs B6 and B7).** This winding consists of insulated conductors wound radially one on top of the other on an insulated cylinder. The outside turn of one disc section is then carried over (crossed-over) to the next disc section, but now the turns proceed from the outside to the inside position using a simple winding technique. This process of building up discs continues until the winding is completed. Similar to the spiral winding, the conductors of the continuous disc winding are wound over axial spacer strips, and radial spacers are used to separate the disc sections. Unlike spiral windings, outside crossovers occur at every pair of disc coils and they must be properly insulated and mechanically braced. If disc coils are wound with two or more strands in parallel, the strands are normally transposed at the crossovers to balance the current in the strands.

The continuous disc winding has a high coil-to-ground capacitance, which causes high surge voltage stresses on the first disc connected to the incoming line. To improve the surge voltage distribution characteristics, an electrostatic shield is placed near the line end. This increases the effective line end series capacitance. To achieve even greater series capacitance effects across all discs, an interleaved conductor coil winding technique is used. For example, two conductors are wound in parallel, but they are connected in series to give an interlaced arrangement that results in a high effective series capacitance through the winding. The final surge voltage distribution is more nearly uniform and stresses each disc equally. The interlaced disc winding is a variation of the continuous disc winding in which the conductors occupy every other position instead of adjacent positions. This winding technique provides a high series capacitance between turns and a more uniform surge voltage gradient along the length of the winding. Internal shields in disc winding may be used in place of interleaved windings.

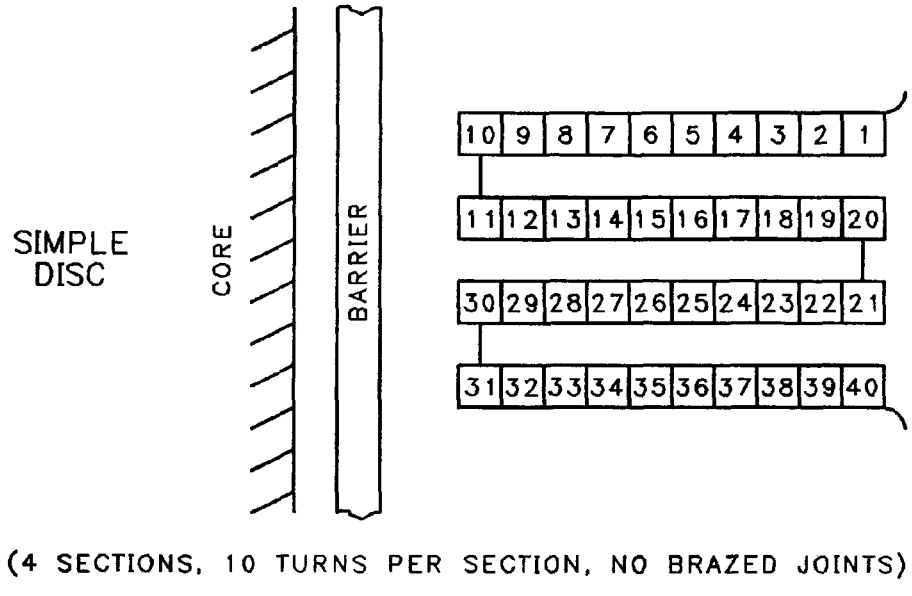


**Fig B6**
**Continuous Disc Windings**



Copyright The Institute of Electrical and Electronics Engineers, Inc.
Provided by IHS under license with IEEE
No reproduction or networking permitted without license from IHS
Not for Resale

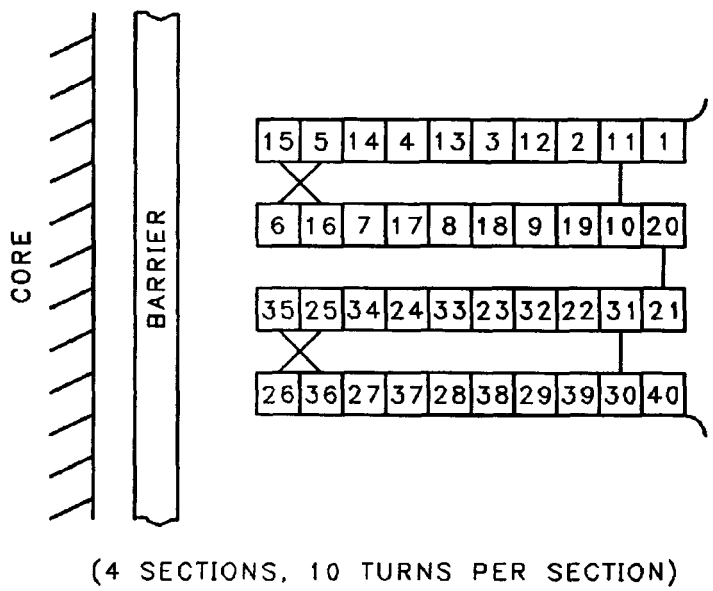


**Fig B7**
**Interleaved (Interlaced) Disc**

**B1.2.7 Sheet Wound Coils.** This winding consists of a single sheet of aluminum or copper conductor spirally wound around an insulating form. A layer of insulating material is wrapped between the conductors. Thermosetting adhesives can be added to the insulating material to bond adjacent conductors. The width of the sheet extends to the full height of the coil. Sheet winding construction is typically used in the low-voltage windings.

Inward radial forces in sheet windings are resisted by the rigidity of the insulating forms and layered insulating papers. During assembly, tension is maintained on the sheet conductor and layered insulation to eliminate voids and to provide a rigid winding to resist outward radial forces. The sheet winding is stronger than a circular wire wound coil in the axial direction under tension, but it is weaker than the wire wound coil in the axial direction under compression. The thermosetting adhesives add rigidity to both radial outward forces and axial compressive forces. Oil duct spaces are designed into the windings to allow circulation of the cooling oil. The sheet wound coil may minimize axial force by allowing current redistribution during through faults.



Copyright The Institute of Electrical and Electronics Engineers, Inc.
Provided by IHS under license with IEEE
No reproduction or networking permitted without license from IHS
Not for Resale

**B1.2.8 Strap and Strip Wound Coils (see Fig B8).** The strap winding consists of single or multilayer conductors, from 1–3 in wide, spirally wound around an insulating form with a layer of insulation between conductors. The strip winding consists of single conductors, from 3–10 in wide, spirally wound around an insulating form with a layer of insulation between the conductors. The conductors for each winding type can be aluminum or copper. Each type of winding can consist of two or more groups electrically connected in parallel. The strap and strip construction is typically used in the low-voltage windings.

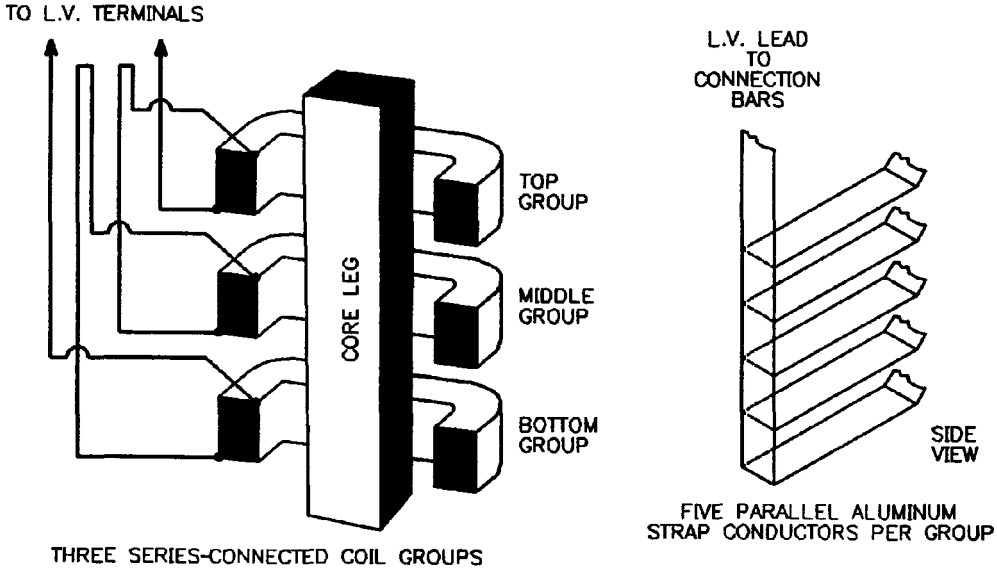


**Fig B8**
**Example of Strap Winding**

**B1.3 Shell Form Coils.** In shell form transformers, the individual rectangular pancake coils are wound so that the currents flow in the same direction, which causes compressive (attractive) forces on the conductors. To develop a coil group, the even numbered pancake coils are wound in the opposite direction of the odd numbered coils. This procedure results in attractive forces between the individual pancake coils. Insulating washers and rigid spacer blocks separate the adjacent coils and are kept in compression during short-circuit forces. The forces within the entire coil groups are all attractive, serving to bind each coil group into a tight package. The high-voltage and low-voltage coil groups are arranged to develop repulsive forces at the high-low barriers. These forces of repulsion are axial, i.e., perpendicular to the pancake coil face. The net axial forces are transmitted through the coil groups and insulation system to the iron core laminations. The core laminations are restrained by the close fitting tank wall, resulting in a rugged mechanical structure to withstand the short-circuit forces. In a shell form transformer, only the straight "legs" of the pancake coils transmit forces to the core. The circular top and bottom parts of the coils transmit their forces to mechanical pressure plates in the ends of the tanks and between phases, as shown in Fig B9.



Copyright The Institute of Electrical and Electronics Engineers, Inc.
Provided by IHS under license with IEEE
No reproduction or networking permitted without license from IHS
Not for Resale

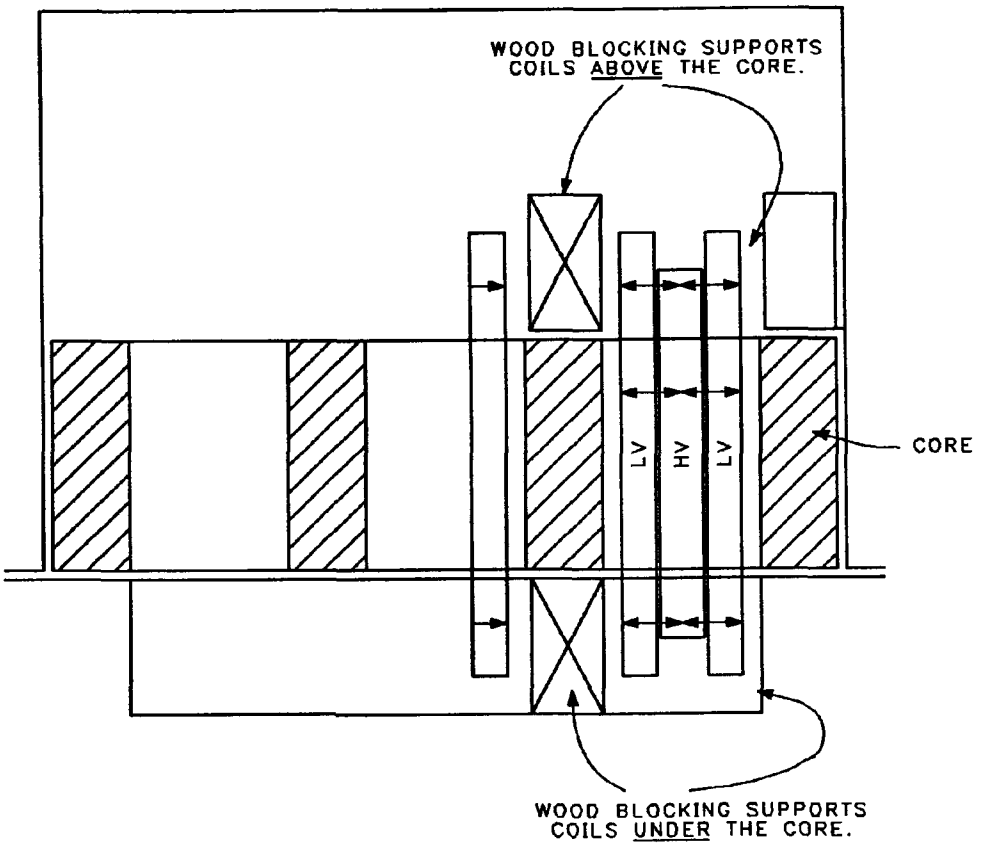


**Fig B9**
**Shell Form Coil Support**

**B1.3.1 The Rectangular Pancake Winding (see Fig B10).** The winding is used in shell form transformers and consists of insulated conductors wound on a flat table around a rectangular form on the table. The first turn, which could consist of many conductors in parallel or continuously transposed cables, has a small radius of curvature at the corners of the rectangle; and special care is exercised to keep the conductors tight and close together. Insulating collars are used to help form the corners. As additional turns are added, the radius of curvature becomes larger, and bending the conductors around the corners becomes easier.

Pancake coils have high inherent series capacitance. The pancake coil is mounted vertically in the transformer and relies on the adjacent coils, rigid spacer blocks, core lamination friction, and a form-fit tank to withstand mechanical forces. The electrical connection of pancake coils is similar to the continuous disc coils, where the outside connections (or crossovers) are made on one coil pair, and inside connections are made on the next coil pair.

Radial spacers are not used in pancake coils. Instead, adjacent pancake coils are separated from each other by spacer blocks fastened to an insulating washer to permit oil to flow over the coil surface and to provide coil-to-coil insulation.



Copyright The Institute of Electrical and Electronics Engineers, Inc.
Provided by IHS under license with IEEE
No reproduction or networking permitted without license from IHS
Not for Resale

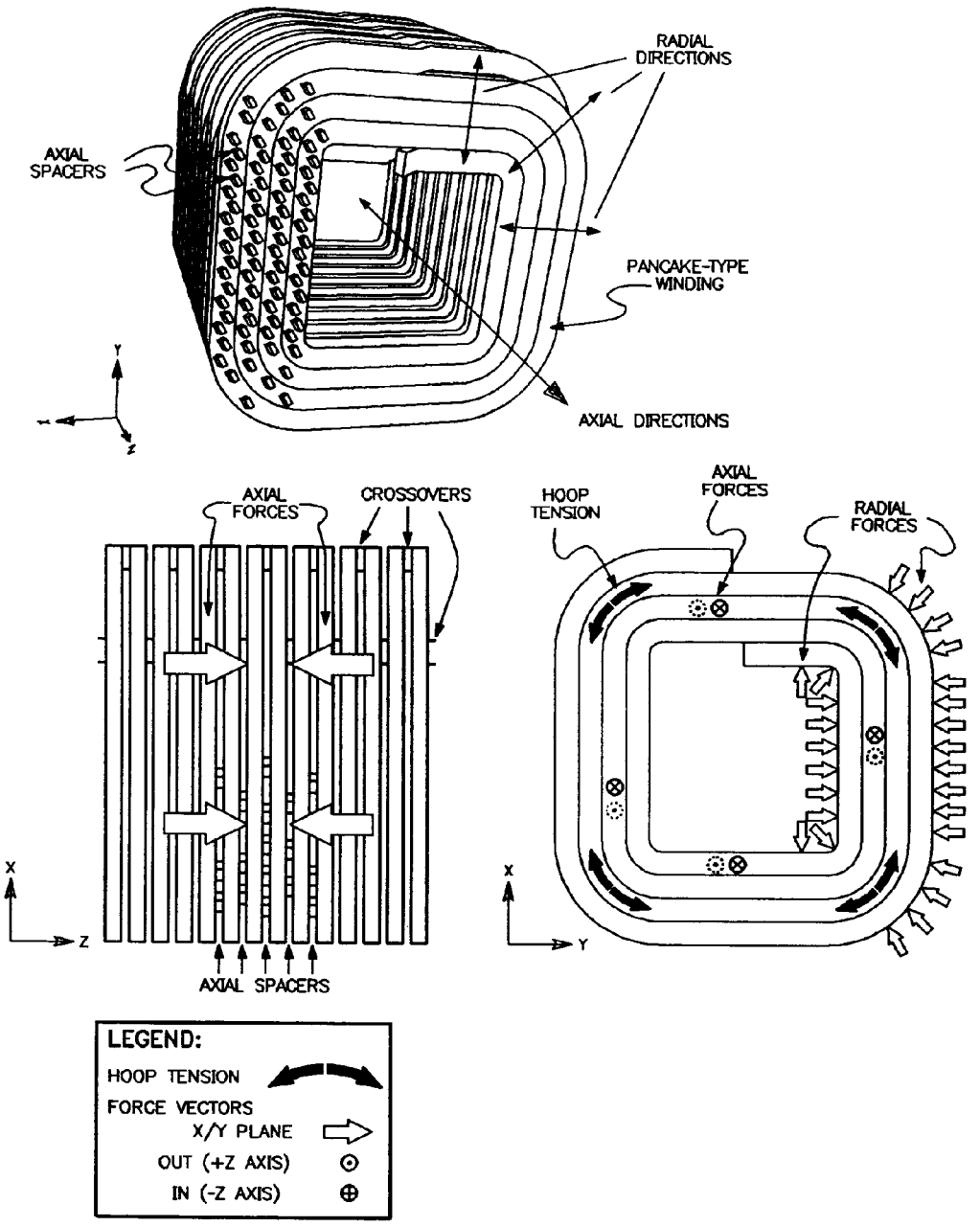


**Fig B10**
**Forces Acting on a Simplified Winding of a Shell-Type Transformer During Through Fault Conditions**



Copyright The Institute of Electrical and Electronics Engineers, Inc.
Provided by IHS under license with IEEE
No reproduction or networking permitted without license from IHS
Not for Resale

## B2. Mechanical Clamping System

**B2.1 Core Form Transformers.** The core clamps are major structural members that function to apply a compressive force on the core laminations, provide a firm foundation for the windings, and rigidly support the top coil clamping system. The bottom yoke clamps support the weight of the windings, the static forces applied to the top coil pressure plate, and the dynamic axial short-circuit forces. The bottom clamps are insulated from the laminations and are held in compression with threaded tie bolts or by the welding of the side clamps to structural cross members. The bottom coil supports distribute the vertical forces evenly on the clamps. The bottom supports are typically fabricated from laminated wood or high-density insulation and permit circulation of cooling oil.

The top yoke clamps support the adjustable clamping system and anchor the vertical tie bars (lock plates) or tie rods. Tie bars are located inside the coils next to the core leg. Tie rods are located outside the coils. Both do the same job. The top coil pressure plate can be fabricated from laminated wood, high-density insulation, fiberglass/epoxy, or it can be a slotted metal plate specially insulated from electrical fields. It must have a high resistance to bending where it passes through the core window.

The core clamping system is adjustable on some designs to apply precalculated compressive forces on the windings to control axial short-circuit forces. Compressive forces are distributed evenly around the coil stack using jack screws, compression wedges, or spring-loaded, oil-filled dashpots. The tie bars, tie rods, or lock plates are also insulated from the core and are kept under tension by the clamping system compressive forces on the winding. Some transformer designs use insulated core through-bolts to keep core leg laminations secure, although this is now an infrequent practice.

**B2.2 Shell Form Transformers (see Fig B11).** The bottom section of the transformer tank supports the entire weight of the rectangular pancake coils, core laminations, insulating materials (including the oil), and the top tank section. An upper and lower T-beam is mechanically connected to each end of the tank walls (on three-phase designs) to support the weight of the center core laminations (lower T-beam) and the weight of the pancake coils (upper T-beam). High-density insulating materials are used to insulate structural steel members from the core laminations and to resist compressive short-circuit forces. The reinforced tank wall and the T-beams are maintained in tension to resist axial short-circuit forces. There are no adjustable coil clamping devices. Movement is restrained by the form-fit tank and the high-density insulation. Also, the top tank section compresses all core laminations outside of the coils a known percentage, thus developing interlaminar friction to absorb the radial short-circuit forces in the pancake coils.

## B3. Electrical Shielding

**B3.1 Winding Shielding.** To protect windings from damaging impulse voltage stresses, various methods of shielding are used, depending on the type of coil winding and its voltage rating. Shielding might consist of wrapping several coil sections with metalized tape, wrapping a sheet of metal around the winding and connecting it to the line end, or placing a static plate at the end of the winding and connecting it to the lead.

**B3.2 Shielding of Leads.** Bare leads, such as bars, rods, or tubes, and insulated conductor leads need to be properly insulated from other current carrying parts and from grounding structures. Voltage stresses on these electrodes may be minimized by rounding off square edges, selecting appropriate diameter rods or tubes, and contouring their shape.



Copyright The Institute of Electrical and Electronics Engineers, Inc.
Provided by IHS under license with IEEE
No reproduction or networking permitted without license from IHS
Not for Resale

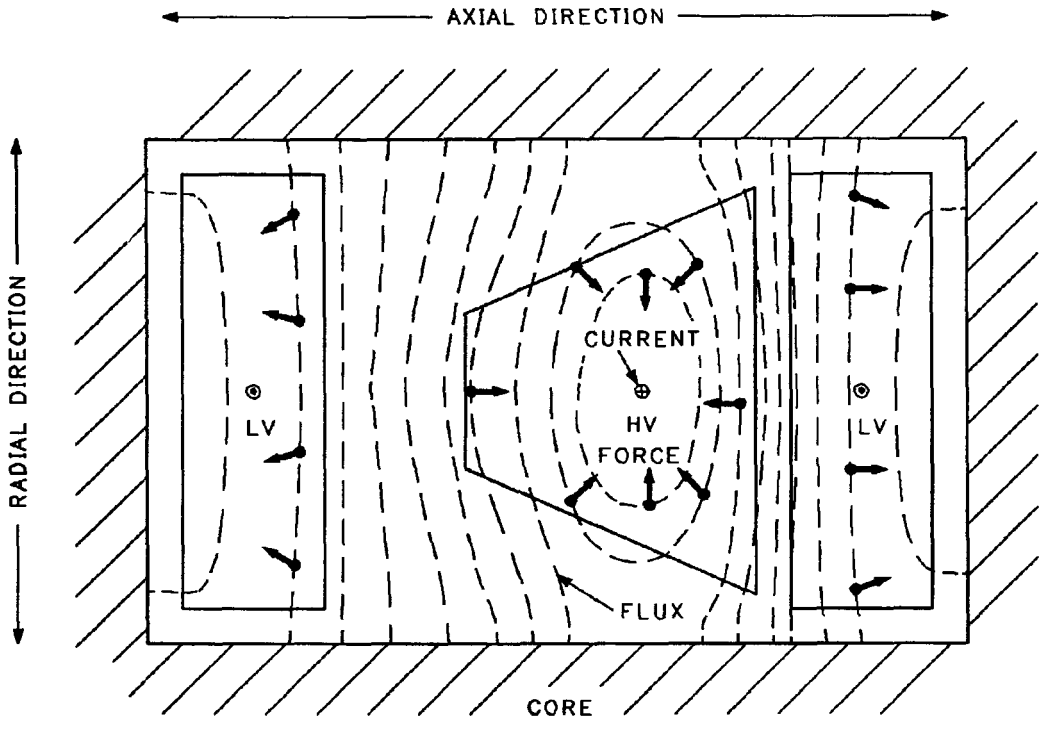


**Fig B11**
**Generated Force in a Shell Form Transformer**

**B3.3 Bushing Shielding.** The insulation distances to the bushings may become the limiting factor in determining tank width or height. Since the bottom terminal on a bushing is not very uniform, a smooth contoured shield may be used to reduce voltage stresses. Overall insulation distances may be reduced further by insulating the bushing shield.

**B3.4 Deenergized Tap Changer.** Insulation distances to the tap changer components also determine tank dimensions. Some deenergized tap changers may be enclosed in insulating shields.

**B3.5 Tank Shielding.** Grounded tank surfaces need to be contoured and kept a sufficient distance from the windings, tap changers, leads, and bushing connections. Pocket mounted bushing configurations require special insulation distances and shielding.

**B3.6 Phase-to-Phase Insulation.** In core form transformers, phase-to-phase insulating barriers help to reduce core window spacings by effectively breaking the oil volume into a number of smaller oil chambers. The barriers also prevent easy movement of charged particles from phase-to-phase, should such particles occur during a lightning or switching transient.



Copyright The Institute of Electrical and Electronics Engineers, Inc.
Provided by IHS under license with IEEE
No reproduction or networking permitted without license from IHS
Not for Resale

# Appendix C
# Case Histories

## C1. Lightning Impulse

This case history involves a 345–138 kV, 400 MVA autotransformer that was approximately five years old.

**C1.1 Unfit for Service.** The transformer was automatically tripped off line by operation of transformer differential relays. The transformer had no previous history of maintenance problems. Periodic electrical and gas-in-oil analysis had been performed and all results had been normal.

The transformer had experienced a fire during assembly at the factory. This event had been resolved satisfactorily prior to installation. However, it was information that was considered during the failure investigation.

**C1.2 Data Collection.** The transformer failed during a severe electrical storm. A study of oscillographic records and sequence of events recorders indicated a phase-three to ground line fault on a 138 kV exit. There was evidence in the station that the rod gaps had arced over. Trip targets were found on transformer differential relays and on line relays. Electrical tests were performed to determine the extent, if any, of the damage. A TTR test resulted in indication of shorted turns. A megometer reading was extremely low on phase three. Because the initial fault was thought to have been external and caused by lightning, the surge arresters were returned to the factory for testing. The arresters on the damaged phase of the transformer tested good. Combustible gas tests were performed on the dissolved gas-in-oil, and the following values resulted:

| Gas | Parts Per Million |
|---|---|
| Hydrogen | 508 |
| Oxygen | 1661 |
| Nitrogen | 64 992 |
| Methane | 196 |
| Carbon Monoxide | 116 |
| Carbon Dioxide | 520 |
| Ethane | 22 |
| Ethylene | 232 |
| Acetylene | 503 |
| Total Combustibles | 1577 |
| Total Gas | 68 750 |

Following analysis of the electrical and fluid tests, an internal inspection was performed. A series winding of phase three was found burned and distorted. No copper particles were visible, but an NLTC lead was blown off. After the unit was returned to the factory for repair, a teardown inspection was performed. External charring of two adjacent pancake coils was found in the tapped section of the series winding. Broken or burnt strands were also found between tap sections.



Copyright The Institute of Electrical and Electronics Engineers, Inc.
Provided by IHS under license with IEEE
No reproduction or networking permitted without license from IHS
Not for Resale

**C1.3 Analysis.** Analysis of the weather conditions and oscillographic records confirmed that a line fault had occurred. Analyses of the transformer alarms and relay targets, along with electrical test results, confirmed that phase three had failed dielectrically. The initial hypothesis of failure suggested that a through fault had resulted in mechanical damage, thereby resulting in the dielectric failure. Analysis of the gas-in-oil test confirmed that arcing had occurred. The internal inspection confirmed that phase three would require a complete rewinding, and that the other phases might be reusable. The damaged phase exhibited extensive winding distortion. There was some disagreement between the vendor and the owner as to what the teardown inspection proved. Because of the evidence of burning of turn-to-turn and coil-to-coil, resonant overvoltage may have been possible. Transformers of similar design had failed on other systems under similar circumstances. These failures had been demonstrated to be caused by the resonant overvoltage phenomena. The resonant overvoltage theory is also supported because the winding distortion was limited to the middle 10–12 turns of each of the coils, making it unlikely that a through-fault failure had occurred. Computer modeling was attempted; however, its results did not conclusively support the hypothesis.

**C1.4 Final Disposition.** Because of the age of the unit and the limited damage to the other phases, a partial rewind was performed. The transformer received a full battery of factory tests and was returned to service.

## C2. Dielectric

This case history involves a 230/115 kV, 280 MVA shellform autotransformer.

**C2.1 Unfit for Service.** The station service fuses were blown out with enough force to knock the doors open and bend the cabinet.

**C2.2 Data Collection.** The teardown of the 230/115 kV, 280 MVA shell form autotransformer that failed in the 230/115 kV substation during severe lightning was observed.

Before the teardown, the following was visible on the phase two winding:

(1) The molded "U" shaped barriers that fit around the pancake windings were not in place. (Friction between the pancake and the barriers is the only thing holding them in place.)
(2) The "Y" tertiary crossover lead had a bare spot that had been hot and had carbon around it.
(3) The insulation of the $H_0X_0$ lead was punctured.
(4) The major damage and winding distortion was in the middle of the HV series windings.

**C2.3 Analysis.** This evidence indicated that an electric arc traveled from the HV to the tertiary crossover and then to the $H_0X_0$ neutral lead.

During teardown, no other evidence of damage was seen. There was no evidence of corona. It was, however, evident during teardown that the through-fault strength is dependent on the "U" shaped barriers being in place. If they are not in place, the ends of the pancake winding are suspended in space and free to move during a through fault. This may not cause any damage at first, but as soon as the insulation is damaged, arcing will occur.

**C2.4 Final Disposition.** Since no other damage occurred, and no evidence of corona was found, the conclusion was that the "U" shaped barriers were pushed or "bounced" out sometime in the past, and the movement of the ends of the pancake was severe enough to twist the windings and cause the arc and the major damage. The unit was rebuilt, replacing the "U" barriers, and returned to service.



Copyright The Institute of Electrical and Electronics Engineers, Inc.
Provided by IHS under license with IEEE
No reproduction or networking permitted without license from IHS
Not for Resale

## C3. Wet Insulation

This case history demonstrates the need for analysis of data as the investigation proceeds.

**C3.1 Unfit for Service.** This transformer tripped out by fault pressure relay.

**C3.2 Data Collection.** Incipient fault gas analysis indicated a slightly higher than normal level, but was still below the critical level. Oil samples taken from the bottom sampling valve showed a high concentration of water. Ratio, insulation resistance, hi-pot, and PF tests were satisfactory; but it was decided to remove the oil, make internal inspection, and return the oil after processing it through a treatment plant to remove moisture.

While preparing to test the transformer, it was noticed that the fault pressure relay was mounted upside down. Water had gotten into the micro switch chamber through a small vent hole in the bottom of the housing, apparently causing the trip contacts to short out. The cover plate was removed and the water drained out. Two of the three wires had broken loose from their terminals due to corrosion. This relay was replaced.

Internal inspection revealed no trouble in the windings, tap changer, or core. One CT lead butt connector inside the tank was loose and was repaired (lead X5 on the H3 bushing CT).

Some foreign materials (paper, string, and tape) were seen in the bottom of the tank. The tank was flushed and vacuumed to remove debris. Also, the oil-level gauge float arm inside of the tank was hanging up on the liquid temperature element housing which would have prevented operation of the low-oil-level alarm. This was also corrected.

**C3.3 Analysis.** The failure investigation process suggested by this guide was followed. Ultimately, the cause of failure was determined. Analysis of the findings could have lead to an earlier conclusion that the relay was faulty. If a careful inspection of the tripping relay (fault pressure relay) had been made during data gathering and the results had been reported, the conclusion could have been reached earlier that this was an incorrect relay operation.

**C3.4 Final Disposition.** After all work was completed and the transformer tank was sealed, the windings were tested for moisture (dewpoint). Testing was satisfactory. All of the oil was vacuum treated to remove moisture and pumped back into the transformer under vacuum.

## C4. Through Fault Mechanical Failure

This transformer was a 230 kV–115 kV, 168 MVA autotransformer.

**C4.1 Unfit for Service.** The transformer was tripped off line. It was the company's standard practice not to reenergize a tripped transformer pending analysis of test results.

**C4.2 Data Collection.** The sequence of events recorder and oscillograph recorded the operation. They indicated a ground fault on a 115 kV line unit out of the substation. The line was cleared in four cycles; however, fault current continued for seven more cycles. There were no visible external signs of damage to the transformer. Differential relay targets were found on the B-phase relay. Electrical tests were performed as well as an analysis of oil samples. A megometer reading and TTR test showed a problem with phase B. Gas found in the gas detector relays was combustible. After lowering the oil, an internal inspection revealed damage to the tapped winding on phase B. Burned leads and copper beads were found on phases A and C.

**C4.3 Analysis.** Analysis of the oscillographs showed a B phase-to-ground fault .34 miles from the substation. The fault level was 10 000 A. The turns ratio and megometer are evidence of a B-phase winding failure. The presence of combustible gas indicates arcing and damaged cellu-



Copyright The Institute of Electrical and Electronics Engineers, Inc.
Provided by IHS under license with IEEE
No reproduction or networking permitted without license from IHS
Not for Resale

lose. Because of the damage revealed by the internal inspection to the series winding, the initial hypothesis of failure is that a mechanical failure occurred during the through fault.

**C4.4 Final Disposition.** No further analysis was performed because the tank and coil were in good condition. The unit was deemed to be a candidate for repair.

## C5. Through Fault Mechanical Failure

This transformer was a 138–72 kV, 200 MVA autotransformer. The transformer was installed in 1960 and failed in July of 1986.

**C5.1 Unfit for Service.** The transformer differential relay was tripped. There had been no prior indication of problems with combustible gases or dielectric tests.

**C5.2 Data Collection.** The PT connected to the low side bus was found damaged. The sudden pressure relays on the autotransformer had operated; however, there was no mechanical relief device operation, and all other gauges were normal. Oscillograms showed a five-cycle C-phase fault at the time of the PT failure. Ninety-five cycles later, a second fault occurred. The transformer was deenergized and differential relay targets were found on A phase and C phase. The external physical condition of the transformer was normal. An oil sample was taken for gas-in-oil analysis. Electrical tests of insulation resistance were found to be normal. However, a low-voltage impedance test showed a significant change on phase C. A TTR test gave normal results on A and B phases, but high exciting current on C phase prevented completion of the test. Winding resistance was measured and found to be normal on A and B, but high on C. The gas-in-oil analysis showed acetylene of 2 ppm and carbon monoxide levels higher than IEEE C57.104-1991 [20] norms. All other gas concentrations were below the limits set by C57.104-1991 [20]. Because of the poor electrical test results, an internal inspection was performed. Milky clouds were found in the oil along with small charred pieces of cellulose, and copper grains were found on the superstructure.

**C5.3 Analysis.** A PT failure on the low-voltage bus caused a bus fault to occur. Breakers at remote stations overtripped for the fault. Analysis of the oscillograms confirmed that the external fault was followed by a failure of the transformer winding. Electrical test results indicated shorted turns of common windings of phase C. The presence of a acetylene suggested that some arcing had occurred. The carbon monoxide levels were probably due to the transformer's age and normal deterioration. It was concluded that a C phase common winding failure had occurred. However, no extensive damage was found at the time of the internal inspection. A teardown inspection was not performed.

**C5.4 Final Disposition.** Because of the evidence that a winding failure had occurred, and comparing the cost of repair to a new unit, the transformer user decided to scrap the unit.

## C6. Overheated Conductors

This case involves a 300 MVA core-form 115–17.1 kV, FOA generator step-up transformer.

**C6.1 Unfit for Service.** This unit was located at a power plant in which contamination of the air passages of the coolers was a problem that required frequent washings. This unit had a history of running hot. Combustible gas-in-oil analysis indicated a slightly (less than 150 °C) overheated condition without cellulose involvement. Later, a combustible gas-in-oil analysis, following a series of through faults, indicated increasing overheating up to 200 °C, again with no cellulose involvement.



Copyright The Institute of Electrical and Electronics Engineers, Inc.
Provided by IHS under license with IEEE
No reproduction or networking permitted without license from IHS
Not for Resale

**C6.2 Data Collection.** The unit was removed from service after operating for 1.5 years with slowly increasing gas levels. Internal inspection showed considerable debris within the transformer, with a ruptured oil duct causing loss of flow to the windings and core and flow impingement on the coil wrapper, abrading and shredding it. The low-voltage windings were found to be varnish insulated wire with radial buckling evident in two phases. The core had slightly darkened areas indicating stray flux heating.

**C6.3 Analysis.** The long-term history of running hot (as seen by winding hot spot detectors) resulted from problems with the coolers.

The low-level heating evidenced by low-level gas in oil (methane/hydrogen ratio) resulted from a minor stray flux problem in the core clamping plates evidenced by darkened areas. It was judged that this condition was not serious enough to damage any core insulation.

The radial buckle of the low-voltage windings resulted from a through fault sometime during its life, but had no relationship to the failure except that, due to the varnish insulated low-voltage winding, no CO or $CO_2$ gases were given off by this winding in spite of the fact that it was obviously suffering impaired oil flow.

The oil duct failure was precipitated by through-fault induced axial movement of the coils (allowed by loosened axial blocking), which removed clamping pressure from the duct where it joins the bottom of the coil and which set up a pressure wave of oil inside of the duct. The rupture allowed short circuiting of the oil flow with reduced core and coil cooling. This artificially lowered the hot spot reading because the oil flow passed outside of the coils, in a flow loop, past the top oil probes.

**C6.4 Final Disposition.** Symptoms may exist that are caused by several problems. Ultimately, it may be necessary to perform a complete teardown inspection to ascertain damage. This unit was rebuilt and returned to service.

## C7. Overheated Joints

This case history involves a 17.9/22.4 MVA, OA/FA, 65 °C rise, 34.5–13.8 kV autotransformer with all aluminum windings.

**C7.1 Unfit for Service.** Abnormal dc resistance measurements were obtained between high-voltage terminals during routine maintenance testing. All other routine test results were normal.

This utility checks dc resistance as a routine maintenance test on all transformers with tap changers to determine if contact problems exist.

**C7.2 Data Collection.** The following measurements were recorded:

| Tap | Terminals | DC Resistance |
|---|---|---|
| 3-3 | H1 – H2 | 0.142 |
| | H2 – H3 | 0.153 |
| | H3 – H1 | 0.153 |
| | H1 – $H_0X_0$ | 0.072 |
| | H2 – $H_0X_0$ | 0.072 |
| | H3 – $H_0X_0$ | 0.084 |



Copyright The Institute of Electrical and Electronics Engineers, Inc.
Provided by IHS under license with IEEE
No reproduction or networking permitted without license from IHS
Not for Resale

Similar measurements were recorded on all tap changer positions. All tap changer contacts were inspected and found to be in good condition. It was then determined that a bad connection in the H3 winding was the problem.

The transformer manufacturer was consulted to determine possible locations for the bad connection. The manufacturer sent an internal assembly drawing for the specific transformer and indicated which connections to check.

A defective crimped joint was found at the connection of the H3 winding neutral to neutral bus lead. The joint had overheated to the extent that the conductors and connector fell apart when the insulating tape was removed.

**C7.3 Analysis.** The electrical tests indicated that the H3 winding had a high resistance connection. This was confirmed by the internal inspection.

**C7.4 Final Disposition.** The damaged conductors were removed and new conductor spliced in place to remake the connection. The conductors were reinsulated with paper tape.

The following measurements were recorded:

| Tap | Terminals | DC Resistance |
|---|---|---|
| 3-3 | H1 – H2 | 0.1410 |
| | H2 – H3 | 0.1406 |
| | H3 – H1 | 0.1433 |
| | H1 – $H_0X_0$ | 0.0714 |
| | H2 – $H_0X_0$ | 0.0712 |
| | H3 – $H_0X_0$ | 0.0716 |

The transformer was cleaned, refilled, retested and returned to service.

## C8. Tap Changer Problems Leading to Failure

This case history involves a 7500 kVA, OA, 55 °C rise, 13.2–4.4 kV autotransformer with load tap changing.

**C8.1 Unfit for Service.** April 2, 1982, 5:23 p.m.; weather — clear; system — normal; substation 13 kV and 4 kV general alarms received; 4 kV general alarm reset OK; 13 kV general alarm no reset. Load dispatcher reported no load on 13 kV feeder. An operator was sent to the substation.

**C8.2 Data Collection.** The operator reported from the substation that a 13 kV feeder and 13–4 kV transformer were out and dead. The target was shown on the C-phase time overcurrent relay. The test department reported high combustible gas in the transformer gas space.

The turns ratio tests indicated good ratios on the A-phase and B-phase windings. The test on C-phase windings were also grounded.

**C8.3 Analysis.** The transformer was shipped to a repair facility where an internal inspection was performed. Inspection of the transformer at the repair facility revealed that the load tap changer initiated the failure. Misalignment of the contacts on the C-phase selector switch



Copyright The Institute of Electrical and Electronics Engineers, Inc.
Provided by IHS under license with IEEE
No reproduction or networking permitted without license from IHS
Not for Resale

caused the mechanism to bend. The C-phase selector switch linkage broke while the load tap changer continued to operated.

**C8.4 Final Disposition.** The load tap changer was repaired and the transformer was rebuilt with all new windings.

## C9. Tap Changer Failure

This transformer was a 138–19 kV, 325 MVA GSU unit.

**C9.1 Unfit for Service.** Periodic testing of dissolved gas-in-oil showed steady increasing levels. These levels are shown below.

| | March 1979 | November 5 1981 | December 14 1981 | December 18 1981 | December 21 1981 |
|---|---|---|---|---|---|
| Hydrogen ($H_2$) | 9 | 180 | 550 | 630 | 670 |
| Oxygen ($O_2$) | 4300 | 9300 | 20 000 | 20 000 | 19 000 |
| Nitrogen ($N_2$) | 25 000 | 88 000 | 73 000 | 75 000 | 72 000 |
| Methane ($CH_4$) | 11 | 1300 | 1300 | 1700 | 1800 |
| Carbon Monoxide (CO) | 490 | 1300 | 510 | 570 | 530 |
| Ethane ($C_2H_6$) | 35 | 600 | 390 | 600 | 650 |
| Carbon Dioxide ($CO_2$) | 3600 | 9800 | 5900 | 7700 | 7500 |
| Ethylene ($C_2H_4$) | 9 | 3800 | 3000 | 4200 | 460 |
| Acetylene ($C_2H_2$) | 0 | 20 | 35 | 56 | 60 |
| Total Gas Content | 33 454 | 114 300 | 104 685 | 111 456 | 106 810 |
| Combustible Gas Content | 554 | 7200 | 5785 | 7756 | 8310 |

**C9.2 Data Collection.** The operator received a gas detector relay alarm and, following the test results shown on the table, the transformer was removed from service. An internal inspection of the transformer was performed. A visual inspection was made of all the bushing connections and the NLTC. Carbon particles were found on the TC contacts.

**C9.3 Analysis.** Analysis of the gas-in-oil test results indicated a thermal fault. From experiencing similar problems with other units, the user determined that the quantity of methane, ethane, and ethylene indicated a bad connection or hot TC contact. Visual inspection confirmed this hypothesis when the carbon was found on all three TCs.

**C9.4 Final Disposition.** Repair of the TC was made in the field. The unit was degassed and returned to service.



Copyright The Institute of Electrical and Electronics Engineers, Inc.
Provided by IHS under license with IEEE
No reproduction or networking permitted without license from IHS
Not for Resale

## C10. Overheated Joints

This case history involves a 115–13.8 kV, 12/16/20 MVA transformer, built in 1967.

**C10.1 Unfit for Service.** This transformer had been gassing for many years. Recently, the rate of gas generation had increased considerably, almost taking off. For the first time, the users were also seeing acetylene. It was decided to remove the transformer from service, untank it, and see if the cause of the problem could be found.

**C10.2 Data Collection.** It could be seen during the untanking inspection that a considerable amount of shifting had occurred involving the end frame alignment. Looking at the unit from either end, a vertical displacement of about an inch or so between the low-voltage and high-voltage side could be seen at the bottom. This ultimately would cause unequal pressure to be applied to the coils by the clamping system. Although a problem, this did not contribute to the gassing of the unit. After checking some of the resistance readings, it was discovered that a crimped joint in one of the tap leads had burned and charred the insulation. In fact, it had burned so badly that, as the insulation was removed from it, the complete crimp came apart. Considerable burning had taken place over a long period of time — the cause for gases in the transformer.

**C10.3 Analysis.** Inspecting all the leads on all three phases, it was discovered that somehow something went wrong during the assembly of the transformer. (It was concluded that no design would be made in this manner.) Just about every tap lead had too many crimp connections involved with the leads. Either the leads were cut too short, and then spliced, or the connections were incorrectly made and then had to be remade. In any event, the cause of the problem with this transformer had been found.

**C10.4 Final Disposition.** The transformer was deemed unrepairable and scrapped.



Copyright The Institute of Electrical and Electronics Engineers, Inc.
Provided by IHS under license with IEEE
No reproduction or networking permitted without license from IHS
Not for Resale