IEEE Std C57.124-1991(R2002)
Reconized as an American National Standard (ANSI)

IEEE Recommended Practice for the Detection of Partial Discharge and the Measurement of Apparent Charge in Dry-Type Transformers

Sponsor
Transformers Committee
of the
IEEE Power Engineering Society

Approved June 27, 1991
Reaffirmed June 12, 2002

Institute of Electrical and Electronics Engineers

Approved October 11, 1991
Reaffirmed September 19, 1996

American National Standards Institute

Abstract: IEEE Std C57.124-1991 covers the detection of partial discharges occurring in the insulation of dry-type transformers of their components and the measurement of the associated apparent charge at the terminals when alternating test voltage is applied. The wideband method is used. The detection system and calibrator characteristics are described, and the test procedure is established.
Keywords: Apparent charge, corona, cost coil transformers, dry-type transformers, partial discharge, ventilated dry-type transformers

---

The Institute of Electrical and Electronics Engineers, Inc.
345 East 47th Street, New York, NY 10017-2394, USA

Copyright © 1992 by
The Institute of Electrical and Electronics Engineers, Inc.
All rights reserved. Published 1992
Printed in the United States of America

ISBN 1-55937-159-5

No part of this publication may be reproduced in any form, in an electronic retrieval system or otherwise, without the prior written permission of the publisher.

Copyright The Institute of Electrical and Electronics Engineers, Inc.
Provided by IHS under license with IEEE
No reproduction or networking permitted without license from IHS
Not for Resale

IEEE Standards documents are developed within the Technical Committees of the IEEE Societies and the Standards Coordinating Committees of the IEEE Standards Board. Members of the committees serve voluntarily and without compensation. They are not necessarily members of the Institute. The standards developed within IEEE represent a consensus of the broad expertise on the subject within the Institute as well as those activities outside of IEEE that have expressed an interest in participating in the development of the standard.

Use of an IEEE Standard is wholly voluntary. The existence of an IEEE Standard does not imply that there are no other ways to produce, test, measure, purchase, market, or provide other goods and services related to the scope of the IEEE Standard. Furthermore, the viewpoint expressed at the time a standard is approved and issued is subject to change brought about through developments in the state of the art and comments received from users of the standard. Every IEEE Standard is subjected to review at least every five years for revision or reaffirmation. When a document is more than five years old and has not been reaffirmed, it is reasonable to conclude that its contents, although still of some value, do not wholly reflect the present state of the art. Users are cautioned to check to determine that they have the latest edition of any IEEE Standard.

Comments for revision of IEEE Standards are welcome from any interested party, regardless of membership affiliation with IEEE. Suggestions for changes in documents should be in the form of a proposed change of text, together with appropriate supporting comments.

Interpretations: Occasionally questions may arise regarding the meaning of portions of standards as they relate to specific applications. When the need for interpretations is brought to the attention of IEEE, the Institute will initiate action to prepare appropriate responses. Since IEEE Standards represent a consensus of all concerned interests, it is important to ensure that any interpretation has also received the concurrence of a balance of interests. For this reason IEEE and the members of its technical committees are not able to provide an instant response to interpretation requests except in those cases where the matter has previously received formal consideration.

Comments on standards and requests for interpretations should be addressed to:

Secretary, IEEE Standards Board
445 Hoes Lane
P.O. Box 1331
Piscataway, NJ 08855-1331
USA

IEEE Standards documents are adopted by the Institute of Electrical and Electronics Engineers without regard to whether their adoption may involve patents on articles, materials, or processes. Such adoption does not assume any liability to any patent owner, nor does it assume any obligation whatever to parties adopting the standards documents.

Copyright The Institute of Electrical and Electronics Engineers, Inc.
Provided by IHS under license with IEEE
No reproduction or networking permitted without license from IHS
Not for Resale

Foreword

(This foreword is not a part of IEEE Std C57.124-1991, IEEE Recommended Practice for the Detection of Partial Discharge and the Measurement of Apparent Charge in Dry-Type Transformers.)

This recommended practice for measuring partial discharge of dry-type transformers was conceived for the purpose of establishing a standardized method for conducting partial discharge tests of dry-type transformers. The results of the tests may be compared with various transformer designs and manufacturers to establish a partial discharge limit for dry-type transformers.

This recommended practice follows the format of IEEE Std 454, IEEE Recommended Practice for the Detection and Measurement of Partial Discharge (Corona) During Dielectric Tests, and IEEE Std C57.113, IEEE Guide for Partial Discharge Measurement in Liquid-Filled Power Transformers and Shunt Reactors. Sections on current detection were purposely omitted, as this technique is normally not used for dry-type transformers.

There is no recognized definition of “partial discharge-free""when referring to partial discharge inception voltage or extinction voltage. An arbitrary sensitivity of 10 pC is suggested until such time as a more definitive standard is established.

Various specifications are already written specifying partial discharge-free transformers from 1.1 p.u. operating voltage to 2.0 p.u. operating voltage. It is the intent of this recommended practice to encourage manufacturers of dry-type transformers and users of dry-type transformers to investigate and report the results of factory tests and field experience of partial discharge in dry-type transformers. It is recognized that Paschen's Law applies to the partial discharge intensity and extinction voltage of dry-type transformers. It is conceivable that a dry-type transformer would test partial discharge-free at 1.65 p.u. voltage at room temperature and be barely partial discharge-free at operating temperature for a Class 220C. system. This correlation should be verified with field experience and reported.

The guide specifies no particular discharge testing instruments and systems. Several commercially available units are being used. A measuring system of discreet components readily available has been used for measuring partial discharge. Most manufacturers' laboratories have partial discharge-free HV test sets and oscilloscopes. The only additional components required to complete the detection circuit are a partial discharge-free coupling capacitor composed of two 60 kV, .002 mfd capacitors in series, and an inductance composed of a coil of magnet wire. Calibration is accomplished using a calibrated square wave generator and a calibrated coupling capacitor of .0001 mfd.

The following two test procedures are proposed:

1) To test partial discharge between the coil and ground, normally accomplished during the applied voltage test.
2) The test procedure takes place during the induced voltage test to detect partial discharge within a coil. It is suggested that partial discharge measurements be made in both modes. The partial discharge measurement may be made during the normal sequence of tests, while the applied and induced voltage tests are being made. An alternative sequence is to conduct the partial discharge test immediately following the applied voltage test and induced voltage test.

The high-voltage bus bars of high-voltage transformers sometimes cause nondestructive partial discharge. This partial discharge in no way affects the reliability of the transformer coils. It may be necessary to disconnect the bus bar from the coils before conducting the partial discharge test on only the coils in order to test for partial discharge in the transformer coils. A note should be added to any test reports stating that the bus bar was removed for the test.

Copyright The Institute of Electrical and Electronics Engineers, Inc.
Provided by IHS under license with IEEE
No reproduction or networking permitted without license from IHS
Not for Resale

At the time this document was submitted to the Standards Board, the Working Group on Recommended Practice for the Detection of Partial Discharges and the Measurement of Apparent Charge in Dry-Type Transformers had the following members:

A.D. Kline, *(Chairman)*

B. F. Allen
Roy Bancroft
D. A. Barnard
A. Bimbiris
M. Cambre
O. R. Compton
J. Frank
E. Gearhart
R. Hayes
R. H. Hollister
J. W. Hupp
A.M. Iversen
A. J. Jonnatti
S. P. Kennedy
E. Koenig
M. L. Manning
R. A. Marek
M. I. Mitelman
J. J. Nay
W. F. Patterson
R. L. Provost
J. Rodden
V. Thenappan
R. E. Uptegraff, Jr.
G. H. Vaillancourt
H. J. Windisch

The following persons were on the balloting committee that approved this document for submission to the IEEE Standards Board:

E. J. Adolphsen
L. C. Aicher
D. J. Allan
B. Allen
R. Allustriarti
M. S. Altman
J. C. Arnold
J. Aubin
R. Bancroft
D. Barnard
D. L. Basel
P. L. Bellaschi
S. Bennon
W. B. Binder
J. V. Bonucchi
J. D. Borst
C. V. Brown
O. R. Compton
F. W. Cook
J. L. Corkran
D. W. Crofts
J. N. Davis
D. J. Douglas
R. F. Dudley
J. C. Dutton
J. K. Easley
J. A. Ebert
D. J. Fallon
F. L. Foster
M. Frydman
H. E. Gabel
R. E. Gearhart
D. W. Gerlach
D. A. Gillies
R. S. Girgis
R. L. Grubb
F. J. Gryszkiewicz
G. Hall
J. H. Harlow
F. W. Heinrichs
W. R. Henning
D. R. Highton
P. J. Hoefler
C. Hoesel
R. H. Hollister
C. C. Honey
E. Howells
C. Hurry
G. W. Iliff
Y. P. Iijima
R. G. Jacobsen
D.C. Johnson
D. L. Johnson
A. J. Jonnatti
C. P. Kappeler
R. B. Kaufman
J. J. Kelly
W. N. Kennedy
J.P. Kinney
B. Klaponski
A.D. Kline
E. Koenig
J. G. Lackey
R. E. Lee
H.F. Light
S.R. Lindgren
L.W. Long
L. A. Lowdermilk
R. I. Lowe
M. L. Manning
H. B. Margolis
T. Massouda
J. W. Matthews
J. McGill
C. J. McMillen
W. J. McNutt
S. P. Mehta
C. K. Miller
C. H. Millian
R. E. Minkwitz
M. Mitelman
H. R. Moore
W. E. Morehart
R. J. Musel
W. H. Mutschler
E. T. Norton
R. A. Olsson
B. K. Patel
W. F. Patterson
H. A. Pearce
D. Perco
L. W. Pierce
J. M. Pollitt
C. P. Raymond
C. A. Robbins
L. J. Savio
W. E. Saxon
D. N, Sharma
V. Shenoy
W. W. Stein
L. R. Stensland
D. Sundin
L. A. Swenson
D. S. Takach
V. Thenappan

Copyright The Institute of Electrical and Electronics Engineers, Inc.
Provided by IHS under license with IEEE
No reproduction or networking permitted without license from IHS
Not for Resale

R. C. Thomas	R. E. Uptegraff, Jr.	R. J. Whearty
J. A. Thompson	G. H. Vaillancourt	A. L. Wilks
T. P. Traub	A. Veitch	W. E. Wrenn
D. E. Truax	L. B. Wagenaar	A. C. Wurdack
W. B. Uhl		E. J. Yasuda

At the time this recommended practice was published, it was under consideration for approval as an American National Standard. The Accredited Standards Committee on Transformers, Regulators, and Reactors, C57, had the following members at the time this document was sent to letter ballot:

Leo J. Savio, *Chair*
John A. Gauthier, *Secretary*

Organization Represented	*Name of Representative*
Electric Light and Power Group	P.E. Orehek S. M. A. Rizvi F. Stevens J. Sullivan J. C. Thompson M.C. Mingoia *(Alt.)*
Institute of Electrical and Electronics Engineers	J. D. Borst J. Davis J. H. Harlow L. Savio H. D. Smith R. A. Veitch
National Electrical Manufacturers Association	G. D. Coulter P. Dewever J. D. Douglas A. A. Ghafourian K. R. Linsley R. L. Plaster H. Robin R. E. Uptegraff, Jr. P. J. Hopkinson *(Alt.)* J. Nay *(Alt.)*
Tennessee Valley Authority	F. A. Lewis
Underwriters Laboratories, Inc	W. T. O'Grady
US Department of Agriculture, REA	J. Bohlk
US Department of Energy, Western Area Power Administration	D. R. Torgerson
US Department of the Interior, Bureau of Reclamation	F. W. Cook, Sr.
US Department of the Navy, Civil Engineering Carps	H. P. Stickley

Copyright The Institute of Electrical and Electronics Engineers, Inc.
Provided by IHS under license with IEEE
No reproduction or networking permitted without license from IHS
Not for Resale

When the IEEE Standards Board approved this standard on June 27, 1991, it had the following membership:

Marco W. Migliaro, *Chair*
Donald C. Loughry, *Vice Chair*
Andrew G. Salem, *Secretary*

Dennis Bodson	Thomas L. Hannan	John E. May, Jr.
Paul L. Borrill	Donald N. Heirman	Lawrence V. McCAll
Clyde Camp	Kenneth D. Hendrix	T. Don Michael*
James M. Daly	John W. Horch	Stig L. Nilsson
Donald C. Fleckenstein	Ben C. Johnson	John L. Rankine
Jay Forster*	Ivor N. Knight	Ronald H. Reimer
David F. Franklin	Joseph Koepfinger*	Gary S. Robinson
Ingrid Fromm	Irving Kolodny	Terrance R. Whittemore
	Michael A. Lawler	

*Member Emeritus

Also included are the following nonvoting IEEE Standards Board liaisons:

Fernando Aldana	James Beall	Richard B. Engelman
Satish K. Aggarwal		Stanley Warshaw

Deborah A. Czyz
IEEE Standards Project Editor

Copyright The Institute of Electrical and Electronics Engineers, Inc.
Provided by IHS under license with IEEE
No reproduction or networking permitted without license from IHS
Not for Resale

CLAUSE PAGE

1. Scope 1

2. Purpose 1

3. References 1

4. Definitions 2

5. Partial Discharge Detection System 3

5.1 High-Voltage Coupling Circuit 3
5.2 Measuring Impedance Unit (Z_m) 4
5.3 Filter Characteristics 5
5.4 Display Unit 5
5.5 Discharge Meter 6
5.6 Basic Sensitivity 6
5.7 Partial Discharge Detector Basic Sensitivity Test 6

6. Calibrator Characteristics 6

6.1 Calibrating Capacitor Value (C_q) 7
6.2 Pulse Generator Rise Time and Decay Time 7
6.3 Pulse Generator Amplitude (U_o) 7
6.4 Pulse Generator Output Impedance (Z_o) 7
6.5 Calibrator Output Level Adjustment 7
6.6 Pulse Generator Frequency 7

7. Tests 7

7.1 General Requirements 7
7.2 Conditioning 8
7.3 Requirements for the Test Voltage 8
7.4 Transformer Connections 8
7.5 Significance of Various Test Connections 8
7.6 Choice of Test Procedure 9
7.7 Disturbances 10

8. Bibliography 18

Annex (informative) Partial Discharge Recognition 24

--`,-`-`,,`,,`,`,,`---

Copyright The Institute of Electrical and Electronics Engineers, Inc.
Provided by IHS under license with IEEE
No reproduction or networking permitted without license from IHS Not for Resale

IEEE Recommended Practice for the Detection and the Measurement of Partial Discharge in Dry-Type Transformers

1. Scope

This recommended practice applies to the detection of partial discharges occurring in the insulation of dry-type transformers or their components, and to the measurement of the associated apparent charge at the terminals when an alternating test voltage is applied.

2. Purpose

Partial discharge measurements in dry-type transformers may preferably be made on the basis of measurement of the apparent charge. Relevant measuring systems are classified as narrow-band or wide-band systems. Both systems are recognized and widely used. Without giving preference to one or the other, it is the object of this document to describe the wide-band method. General principles of partial discharge measurements, including the narrow-band method, are covered in IEEE Std 454-1973[1] [8][2], IEC 270 (1981) [6][3]and IEC 76-3 (1980) [5].

3. References

The following publications should be used in conjunction with this document. When the standards referred to in this guide are superseded by a new revision approved by the relevant standards authority, the latest revision should apply.

[1] ANSI C68.1-1968, Standard for Measurement of Voltage In Dielectric Tests.[4]

[1]This standard has been withdrawn, however, copies are available from the Institute of Electrical and Electronics Engineers, Inc., Service Center, 445 Hoes Lane, Piscataway, N.J. 08855, U.S.A.
[2]The numbers in brackets refer to those listed in Section 4.
[3]IEC publications are available from IEC Sales Department, Case Postale 131, 3 rue de Varembé, CH 1211, Genève 20, Switzerland/Suisse. IEC publications are also available in the United States from the Sales Department, American National Standards Institute, 11 West 42nd Street, 13th Floor, New York, NY 10036, USA.
[4]ANSI publications are available from the American National Standards Institute, 11 West 42nd Street, 13th Floor, New York, NY 10036.

Copyright © 1992 IEEE All Rights Reserved

Copyright The Institute of Electrical and Electronics Engineers, Inc.
Provided by IHS under license with IEEE
No reproduction or networking permitted without license from IHS
Not for Resale

[2] ASTM D1868-81 (1990-E01), Method for Detection and Measurement of Partial Discharge (Corona) Pulses in Evaluation of Insulation Systems.[5]

[3] ASTM STP-669, Engineering Dielectrics, Vol. 1, Corona Measurement and Interpretation.

[4] CIGRE Working Group 21-03, "Recognition of Discharges," Electra, No. 11, pp. 61-98, Dec, 1969.[6]

[5] IEC 76-3 (1980), Power Transformers, Part 3: Insulation Levels and Dielectric Tests.[7]

[6] IEC 270 (1981), Partial Discharge Measurements.

[7] IEEE Std 436-1991, IEEE Guide for Making Corona (Partial Discharge) Measurements of Electronics Transformers (ANSI).[8]

[8] IEEE Std 454-1973, IEEE Recommended Practice for the Detection and Measurement of Partial Discharge (Corona) During Dielectric Tests.

[9] IEEE Std C57.113-1991, IEEE Guide for Partial Discharge Measurement in Oil-Filled Power Transformers and Shunt Reactors (ANSI).

4. Definitions

partial discharge: A partial discharge within the terms of this document is an electric discharge that only partially bridges the insulation between conductors. The term “corona ” has also been used frequently with this connotation. Such usage is imprecise and is gradually being discontinued in favor of the term “partial discharge.”

apparent charge (terminal charge): The apparent charge (q) of a partial discharge is that charge which, if it could be injected instantaneously between the terminals of the test object, would momentarily change the voltage between its terminals by the same amount as the partial discharge itself. The apparent charge should not be confused with the charge transferred across the discharging cavity in the dielectric medium. Apparent charge within the terms of this document is expressed in coulombs, abbreviated C. One pC is equal to 10^{-12} coulombs.

repetition rate(n).: The partial discharge pulse repetition rate (n) is the average number of partial discharge pulses per second measured over a selected period of time.

acceptable terminal partial discharge level: The acceptable terminal partial discharge level is that specified maximum terminal partial discharge value for which measured terminal partial discharge values exceeding the said value are considered unacceptable. The method of measurement and the test voltage for a given test object should be specified with the acceptable terminal partial discharge level.

voltage related to partial discharges: Voltage within the terms of this document is the phase-to-ground alternating voltage for applied tests (Fig 1) or terminal to terminal alternating voltage for induced voltage tests (Fig 8). Its value is expressed by its peak value divided by the square root of two.

partial discharge inception voltage: The lowest voltage at which partial discharges exceeding a specified level are observed under specified conditions when the voltage applied to the test object is gradually increased from a lower value. This voltage is expressed as the peak value divided by the square root of two.

[5]ASTM publications are available from the American Society for Testing and Materials, Customer Service Dept., 916 Race Street, Philadelphia, P. A. 19103, U.S. A.
[6]CIGRE publications are available from the International Conference on Large-Voltage Electric Systems, 112 Boulevard Haussman, F-75008 Paris, France.
[7]IEC publications are available from IEC Sales Department, Case Postale 131, 3 rue de Varembé, CH 1211, Genève 20, Switzerland/Suisse. IEC publications are also available in the United States from the Sales Department, American National Standards Institute, 11 West 42nd Street, 13th Floor, New York, NY 10036, USA.
[8]IEEE publications are available from the Institute of Electrical and Electronics Engineers, Inc., Service Center, 445 Hoes Lane, Piscataway, N.J. 08855, U.S. A.

 Copyright © 1992 IEEE All Rights Reserved

Copyright The Institute of Electrical and Electronics Engineers, Inc.
Provided by IHS under license with IEEE
No reproduction or networking permitted without license from IHS Not for Resale

partial discharge extinction voltage: The voltage at which partial discharges exceeding a specified level cease under specified conditions when the voltage is gradually decreased from a value exceeding the inception voltage. This voltage is expressed as the peak value divided by the square root of two.

partial discharge-free test voltage: The partial discharge-free test voltage is a specified voltage, applied in accordance with a specified test procedure, at which the test object should not exhibit partial discharges above the acceptable energized background noise level.

energized background noise level: The energized background noise level stated in pC is the residual response of the partial discharge measurement system to background noise of any nature after the test circuit has been calibrated and the test object is energized at a maximum of 50% of its nominal operating voltage.

acceptable energized background noise level: The acceptable energized background noise level present during test should not exceed 50% of the acceptable terminal discharge level, and in any case, should be below 100 pC (5 pC if an acceptable terminal discharge level of 10 pC is required.)

5. Partial Discharge Detection System

(Figs 9 and 10 taken from ASTM STP669)

The partial discharge detection system comprises the following components:

1) a high-voltage coupling circuit (C_1, C_v)
2) a measuring impedance unit (Z_m consisting of R_m, C_2 and L)
3) an amplifier and filter circuit
4) a display unit
5) a discharge meter
6) a calibrator (C_q, V_l)
7) a source filter (Z optional)

5.1 High-Voltage Coupling Circuit

The purpose of the high-voltage coupling circuit is to allow the connection of the measuring impedance (Z_m) to the high-voltage terminal of the transformer under test. In other types of high-voltage equipment, a single, low-capacitance high-voltage capacitor is usually used for this purpose, but in transformers, the equivalent terminal capacitance is usually very low, so a substantial amount of signal is normally produced by partial discharge of only a few pC, and measurement sensitivity is not a problem. At the same time, due to standing waves within the winding, a certain amount of signal cancellation may occur if the bandwidth is not sufficiently wide. Therefore, to insure that the input circuit of the partial discharge detection system does not act as a differentiator and reduce the total bandwidth of the system, it has been found that a high value for the coupling capacitor is necessary to produce a long-time constant of the input circuit. Even then, however, the low equivalent terminal capacitance of the transformer, usually less than 500 pF, will limit this time constant and it may not be possible to make it sufficiently long. Therefore, the use of a single coupling capacitor is not recommended. On the other hand, a satisfactory time constant can always be obtained by using a second capacitor (C_2) as part of the measurement impedance, and this is the recommended method.

As shown in Figs 9 and 10, high-voltage capacitor C_1, and low-voltage capacitor C_2, will form a voltage divider. This voltage divider will reduce the sensitivity of the measurement. To make sure that both the sensitivity is still sufficient and the time constant is sufficiently long, the values of C_1, C_2, and L should respect the conditions below:

$$C_1 \geq 100pF \quad (1)$$

Copyright © 1992 IEEE All Rights Reserved

Copyright The Institute of Electrical and Electronics Engineers, Inc.
Provided by IHS under license with IEEE
No reproduction or networking permitted without license from IHS Not for Resale

$$C_2 \geq \frac{1}{2\pi f_L R_m} \tag{2}$$

where R_m is the parallel resistive part of the measuring impedance unit (Z_m). The value of R_m should be determined from the particular partial discharge instrument that is used.

Example:

For $f_L = 70kHz, R_m = 2.5k\Omega$ and $C_1 = 100pF$

$$C_2 = \frac{1}{6.28x70,000x2500} = 909pF$$

A value of 1000 *pF* may be chosen for C_2 since 1000 *pF* ≥ 909 *pF* and $\frac{1000}{100} = 10 \leq 15$

$$L = \frac{2500}{6.28x70,000} = 5.7mH$$

$$\frac{C_2}{C_1} \leq 15 \tag{3}$$

In cases where an *RLC* measurement impedance is used, the value of *L* should satisfy the equation below. This will ensure that the measurement bandwidth is unaffected by the presence of *L*.

$$L \geq \frac{R_m}{2\pi f_L} \tag{4}$$

If the transformer to be tested is fitted with a capacitive bushing tap, then this can be used directly as the high-voltage coupling circuit, and a separate coupling capacitor C_1 is not needed.

5.2 Measuring Impedance Unit (Z_m)

The measuring impedance unit (Z_m) is located physically close to the high-voltage coupling circuit and serves two main purposes:

1) It attenuates the test voltage present on the high-voltage coupling circuit to a safe value for measurement of partial discharge signals;
2) It matches the amplifier and filter circuit to the high-voltage coupling circuit in insuring a fiat frequency response across the full measurement bandwidth.

The measuring impedance unit (Z_m)should be configured in such a way as to permit test voltage level monitoring and to observe the phase relationship between the test voltage and the partial discharge pulses; this technique helps to identify the nature of the discharges.

As shown in Figs 9 and 10, capacitor C_v, whose capacitance value should be chosen to be at least 500 times that of C_1, may be placed in either one of the following two positions:

1) In series with inductor *L* (Fig 9 or 10), or
2) In series with the low-voltage side of high-voltage capacitor C_1 (Fig 10.)

Copyright © 1992 IEEE All Rights Reserved

Copyright The Institute of Electrical and Electronics Engineers, Inc.
Provided by IHS under license with IEEE
No reproduction or networking permitted without license from IHS Not for Resale

Figure 9 shows the preferred position for C_v since the input impedance of the display unit does not shunt the measurement impedance and can be neglected. However, some voltage will reach the input of the amplifier and filter circuit and may cause it to saturate. This voltage can be decreased by increasing the value of C_v until it is less than 5 V. If saturation occurs, a 20 nF low-voltage capacitor may be placed in series with the input of the amplifier and filter circuit as shown to decouple voltage at the excitation frequency.

In the cases where one can not be absolutely certain that saturation of the amplifier will not occur, it is then advised to place C_v in the position shown in Fig 10. The impedance of the display circuit will now shunt the measurement impedance and its input capacitance will need to be considered to calculate the value of C_2, as it will add to it.

5.2.1 Lower and Upper Cut-Off Frequencies (f_L and f_H)

The lower and upper cut-off frequencies f_L and f_H, respectively, are the frequencies at which the response to a constant sinesoidal input voltage has fallen by 6 db from the maximum value occurring inside the recommended bandwidth. f_L should be located in the range from 70 to 120 kHz to minimize the effect of winding attenuation on partial discharge signals, and at the same time, to provide adequate rejection of SCR-generated noise present in manufacturing plants. An upper limit on f_H of 300 kHz is usually necessary to prevent broadcast stations from interfering with the partial discharge measurement.

5.3 Filter Characteristics

The filter characteristics of the partial discharge detection circuit should be such as to provide attenuation of at least 50 db at 25 kHz, of at least 60 db at 15 kHz and below, and of at least 20 db at 500 kHz and above, with respect to the response at the geometric mean frequency (f_C) of the system pass bandwidth that is given by:

$$f_c = (f_L \bullet f_H)^{.5}$$

The filter may be combined with an amplifier to form an active filter. Care should be taken to prevent the saturation of the filter input by the presence of the applied test voltage.

5.3.1 Bandwidth Δf

The bandwidth Δf is defined as:

$$\Delta f = f_H - f_L$$

The bandwidth should not be less than 100 kHz. A wider bandwidth provides a response whose level is less sensitive to the location of a partial discharge pulse along a transformer winding and is, therefore, more uniform. A bandwidth wider than 100 kHz is preferable, but may lead to background noise problems.

5.3.2 Linearity

The instrument circuit, display unit, and discharge meter should be linear within plus or minus 10% of full scale in the range of 50 to 1000 pC.

5.4 Display Unit

The display unit should be a cathode ray oscilloscope with a linear, rectangular, or an elliptical time-base. In all cases, the time-base should be synchronized to the test voltage, and at least 98% of a full cycle should be displayed. The phase relationship of the partial discharges to the test voltage should be easy to determine. A suitable graticule should be provided.

Copyright © 1992 IEEE All Rights Reserved

Copyright The Institute of Electrical and Electronics Engineers, Inc.
Provided by IHS under license with IEEE
No reproduction or networking permitted without license from IHS
Not for Resale

5.5 Discharge Meter

A discharge meter may be provided on the instrument or a suitable output for it should be made available. It should be established that the signal on this output tracks the signal appearing on the display within ±5% over the usable display range.

The discharge meter should be of the true peak type. Its charging time to 95% should be (.5 f_H) second (see 5.2.1) or shorter. Its discharge time constant, or the time taken for a reading to decay to 36.8% of its initial value, should be between 100 ms and 750 ms.

5.6 Basic Sensitivity

The minimum partial discharge level that can be detected is determined by one of the following two factors:

1) the partial discharge detector basic sensitivity that depends on the amplifier noise level, or
2) the test circuit background noise that is either induced or conducted.

The partial discharge detector basic sensitivity should be high enough that the measurement sensitivity during actual tests will usually be limited by the test circuit background noise alone, and not by the amplifier noise of the detector.

5.7 Partial Discharge Detector Basic Sensitivity Test

To ensure that the partial discharge detector used has sufficient basic sensitivity, the test circuit shown in Fig 9 or 10 may be used. Values of C_T, C_l, and C_2 should be chosen to represent a fairly bad case of signal attenuation coupled to an above average transformer equivalent capacitance. Any type of low-inductance, low-loss capacitors could be used, but mica capacitors are recommended. This test need be performed only when acquiring a new partial discharge detector and at fixed time intervals thereafter, for example, every 6 months, or after the equipment is either repaired or modified.

A transformer-equivalent internal capacitance is simulated by the 8 000 pF capacitor (C_T). The bushing tap connection is simulated by capacitors of l00 pF (C_1) and 1500 pf (C_2). The measurement impedance is connected to the junction of C_1 and C_2. The cable that is normally used for the bushing tap may be used to connect the measurement impedance to the detector. The sensitivity should be such that when 25 pC is injected into the 8000 pF capacitor, then the peak amplitude of the signal appearing on the detector screen is at least twice the value of the amplifier background noise level.

6. Calibrator Characteristics

The calibrator comprises a pulse generator in series with a small capacitor (C_q) of known value. If required by specifications, the calibration can be traceable to the National Institute of Standards and Technology (NIST) by calibrating the amplitude of the pulse generator and calibrating capacitor C_q with a precision of ±3% to NIST. The generator and the capacitor may be placed in the same box or may be connected together via a properly terminated coaxial cable of sufficient length to permit calibration from the control room. The calibrator may be either line- or battery-powered.

Capacitor (C_q) should be placed as near as possible to the transformer terminal.

Copyright © 1992 IEEE All Rights Reserved

Copyright The Institute of Electrical and Electronics Engineers, Inc.
Provided by IHS under license with IEEE
No reproduction or networking permitted without license from IHS Not for Resale

6.1 Calibrating Capacitor Value (C_q).

The capacitance of the calibrating capacitor should be no more than 0.1 C_t, and should not exceed 150 pF, nor be less than 15 pF. C_t is the equivalent capacitance at the test object terminal where the calibration pulse is injected.

6.2 Pulse Generator Rise Time and Decay Time

The rise time of the pulse generator should be less than 0.1 uS from 10% to 90% of peak value. A decay time to 50% of peak value of not less than 100 uS will usually be suitable.

6.3 Pulse Generator Amplitude (U_o).

The maximum amplitude (U_o) of the pulse generator output should be such that the product $U_o \cdot C_q$ can be made equal to at least 1000 pC. The amplitude may be calibrated to NIST if necessary.

6.4 Pulse Generator Output Impedance (Z_o).

In the case that the pulse generator and the calibration capacitor are connected together via a coaxial cable, then the output impedance of the generator should be the same as the characteristic impedance of the cable used.

6.5 Calibrator Output Level Adjustment

The amount of charge injected (q_o) will be determined using the formula $q_o = U_o \cdot C_q$. The pulse generator should either have a known calibrated output level or its output level should be monitored. A suitable output level adjustment in the form of a calibrated potentiometer or a calibrated step attenuator should be provided. The adjustment range should extend over at least two decades and a minimum of three adjusting steps per decade should be provided. A calibrated adjustment is not required if the generator output level is monitored. Adjusting its output level should not affect the pulse generator equivalent source impedance.

6.6 Pulse Generator Frequency

The pulse generator frequency should be the same as the power voltage frequency, or the same as the test voltage frequency ±20%. It is recommended that the frequency be synchronized to the test frequency. Calibration pulse rate will be twice the pulse generator frequency and the pulse polarity will alternately be positive and negative. The approximate pulse generator frequency should be recorded if different from the power voltage frequency.

7. Tests

7.1 General Requirements

In order to obtain reproducible results in partial discharge tests, careful control of all factors is necessary. The criteria listed in the foreword of this document apply to the transformer and to the test voltage. The quantity to be measured and the minimum measurable discharge level required should also be specified. Reference should be made to 7.7.3 for information on limits of measurable level. It is important that the partial discharge quantity measured, together with the method of measurement and calibration data, be recorded in the test report. A sample report form is shown in Fig 11.

Copyright © 1992 IEEE All Rights Reserved

Copyright The Institute of Electrical and Electronics Engineers, Inc.
Provided by IHS under license with IEEE
No reproduction or networking permitted without license from IHS Not for Resale

7.2 Conditioning

It is recommended that the transformer be conditioned by being dry and clean, and it should be at ambient temperature during the tests.

To ensure reproducibility of partial discharge test results, it is important that the electrical, thermal, and mechanical conditions of the transformer and environmental conditions during the test are well defined and stable (see 7.7.). Previous voltage applications may affect the test results.

7.3 Requirements for the Test Voltage

For partial-discharge tests with alternating voltage during the applied voltage test, the test voltage should comply with the requirements of ANSI C68.1-1968 [1]. High-frequency components of the test voltage may cause misleading results by affecting the partial discharge conditions, or by directly influencing the instrument readings. They should be reduced until the influence is undetectable at the required measurement sensitivity.

7.4 Transformer Connections

Various transformer test connections are shown in Figs 1 through 8. Figure 1 is used for measuring partial discharge in the applied voltage test connection. This connection may be used for either single-phase or three-phase transformers. Figures 2, 3, and 4 are for testing partial discharge using the induced test circuit. Figures 5, 6, 7, and 8 are used for testing three-phase transformers in a three-phase circuit. Figures 2, 3, or 4 may be used to test the partial discharge in one phase of a three-phase delta-delta transformer with the interconnections removed. Figure 8 is used to test one phase of a three-phase wye winding.

7.5 Significance of Various Test Connections

The various test connections shown for transformers produce various distributions of voltage stress. Analysis of test results on various test connections may indicate the location of partial discharge. Voltage stresses during the test can be compared with stress at normal operating conditions. For example, Fig 1 produces voltage stresses between the complete coil and ground. Any partial discharge is in the coil insulation to ground and not between parts of the tested coil. Figure 2 stresses the coil between ground at one terminal and full voltage at the other terminal, producing operating stresses between parts of the coil and progressive stress to ground. Figures 3 and 4 produce minimum stress from coil to ground while maintaining operating stress between parts of the coil. Similar conditions exist for the three-phase circuits. Caution should be exercised in using the circuit of Figs 6 and 7, in that greater than 2 times operating voltage to ground will be experienced during the induced voltage test. The per-unit voltage stress to ground is summarized in Table 1, where 1 p.u. equals line-to-line voltage.

Copyright © 1992 IEEE All Rights Reserved

Copyright The Institute of Electrical and Electronics Engineers, Inc.
Provided by IHS under license with IEEE
No reproduction or networking permitted without license from IHS Not for Resale

Table 1— Per-Unit Voltage Stress-to-Ground

Application	Figure	H_1 to Ground.	H_2 to Ground.	H_3 to Ground	Midpoint to Ground H_1-H_2	Midpoint to Ground H_2-H_3	Midpoint to Ground H_3-H_1
Applied Voltage	1	1	1		1		
One-Phase Induced	2	1	0		.5		
One-Phase Induced	3	.5	.5		0		
One-Phase Induced	4	.5	.5		0		
Three-Phase Induced	5	.577	.577	.577	.29	.29	.29
Three-Phase Induced	6	0	1	1	.5	.866	.5
Three-Phase Induced	7	.5	.5	.866	0	.5	.5
Three-Phase Induced	8	.577	.577	.577	.29	.29	.29

7.6 Choice of Test Procedure

Three examples of interest are given in 7.6.1, 7.6.2, and 7.6.3. Respectively, the *first* verifies that the test transformer is free from significant partial discharges up to a specified test voltage; the *second* is used to determine the discharge inception and extinction voltages; and the *third* is used for measurement of the discharge level at a voltage or voltages in the range between the inception voltage and the maximum dielectric test voltage.

7.6.1 Verification of the Partial Discharge-Free Voltage

The discharge-free voltage of a transformer specification is verified by the following test.

A voltage, well below the specified discharge-free voltage, is applied to the transformer, gradually increased to the specified voltage, and maintained for the specified time; thereafter, it is decreased and switched off. The transformer is considered to have passed the test if the discharges do not exceed a specified level. This procedure does not ensure that the partial discharge extinction voltage is higher than the discharge-free voltage.

7.6.2 Determination of the Partial Discharge Inception and Extinction Voltages

A voltage well below the inception value is applied to the transformer and gradually increased until discharges exceed a specified level. The test voltage at this discharge limit is recorded. The voltage is then increased by 10% and thereafter reduced to a value at which the discharges cease or become less than a specified level. The voltage corresponding to this discharge limit is recorded. For some insulation systems, the extinction and inception values may be influenced by the length of time that the test voltage is maintained above the inception value.

Caution: In no circumstances should the voltage applied exceed the dielectric test voltage applicable to the transformer under test, as there is danger of damage from repeated voltage applications in the region of the dielectric test voltage.

In some cases, sporadic partial discharges appear at a relatively low voltage and disappear at once or later during the tests. It is recommended that the occurrence of such discharges be mentioned in the test report.

Copyright © 1992 IEEE All Rights Reserved

Copyright The Institute of Electrical and Electronics Engineers, Inc.
Provided by IHS under license with IEEE
No reproduction or networking permitted without license from IHS
Not for Resale

7.6.3 Measurement of Apparent Charge

Partial discharges are evaluated in terms of the specified quantities at a specified test voltage that may be well above the expected partial discharge inception voltage. The voltage is gradually increased from a low value to the specified value and maintained there for the specified time interval.

Measurements are made at the end of this time interval, after which the voltage is decreased and switched off. Measurements may also be made while the voltage is being increased or decreased or throughout the entire test period.

7.7 Disturbances

7.7.1 Sources of Disturbances

Interference with the indications of partial discharge measuring instruments may be caused by disturbances that fall into the following categories:

1) Disturbances that are independent of the voltage supplied to the test object, caused, for example, by switching operations, commutating machines, high-voltage tests in the vicinity, radio transmissions, etc.
2) Disturbances associated with the test voltage, but that do not occur in the test object; these include partial discharges in the testing transformer, on the high-voltage conductors, in bushings (if not part of the test object), or by the sparking of imperfectly grounded objects in the vicinity. Disturbance can also be transferred from the low-voltage supply. See also Appendix A.

7.7.2 Checking and Reduction of Disturbances

The voltage-independent sources can be detected by a reading on the instrument when the test circuit is not energized. The value read on the instrument is a measure of these disturbances. Voltage-dependent disturbances are generally more difficult to trace. One method is to disconnect the test object or replace it by a discharge-free “dummy”. The circuit is then energized up to at least the full test voltage. The use of an oscilloscope as an indicating instrument helps the observer to distinguish between discharges in the test object and external disturbances, and sometimes makes it possible to determine the type of discharges.

The use of a balanced circuit often enables the observer to distinguish between discharges in the test object and discharges in other parts of the test circuit or background noise, and to compensate for the latter. In measurements on a composite test object, it may enable discharges at two or more sections to be distinguished. Nonelectrical detection methods, such as an acoustical detector, are often useful for locating partial discharges on the high-voltage leads and elsewhere in the test area. They can also give independent confirmation of internal partial discharges.

7.7.3 Disturbance Levels

No definite values for the magnitude of disturbances can be given, but as a general guide, excessive disturbances may be encountered in unshielded industrial testing areas, especially in the case of test circuits of large physical dimensions.

In electrically shielded rooms, with effective grounding of all conducting structures and with adequate precautions to suppress disturbances from the power supply and from other electrical systems, the ultimate limit of measurement is that of the measuring arrangement itself. This limit depends on thermal noise in the test circuit and amplifier, and on the sensitivity of the instrument.

Copyright © 1992 IEEE All Rights Reserved

Copyright The Institute of Electrical and Electronics Engineers, Inc.
Provided by IHS under license with IEEE
No reproduction or networking permitted without license from IHS Not for Resale

Transformer Test Circuit Partial Discharge

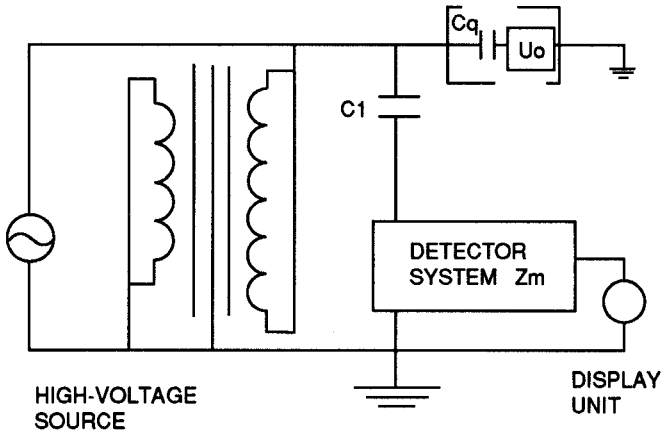

Figure 1— Applied Voltage

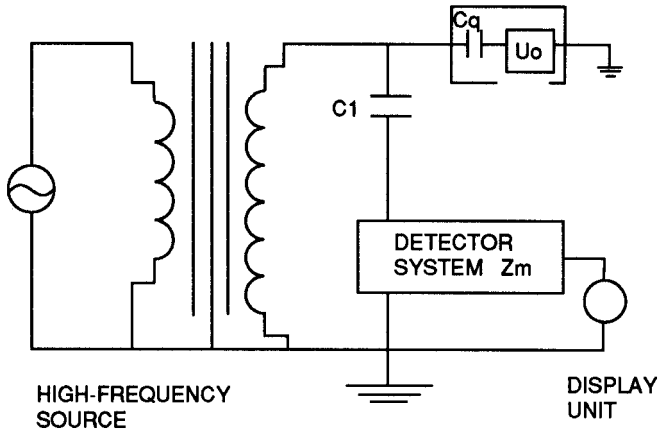

Figure 2— Induced Voltage One End of Transformer Grounded or Ground Wye Transformer

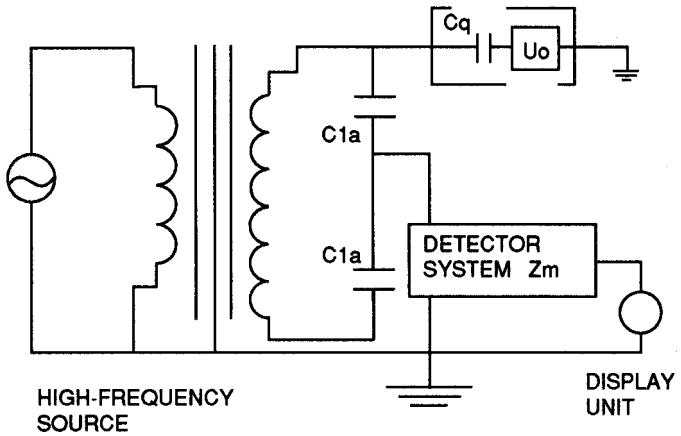

Figure 3— Induced Voltage Balanced Winding

Copyright © 1992 IEEE All Rights Reserved

--`,,`-`-`,,`,,`,`,,`---

Copyright The Institute of Electrical and Electronics Engineers, Inc.
Provided by IHS under license with IEEE
No reproduction or networking permitted without license from IHS
Not for Resale

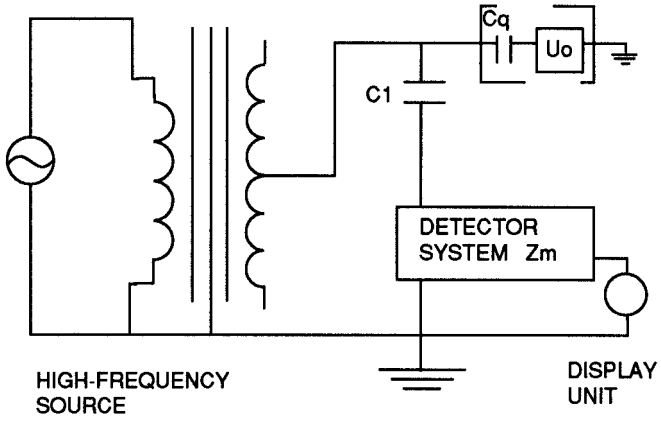

Figure 4— Induced Voltage Center Winding

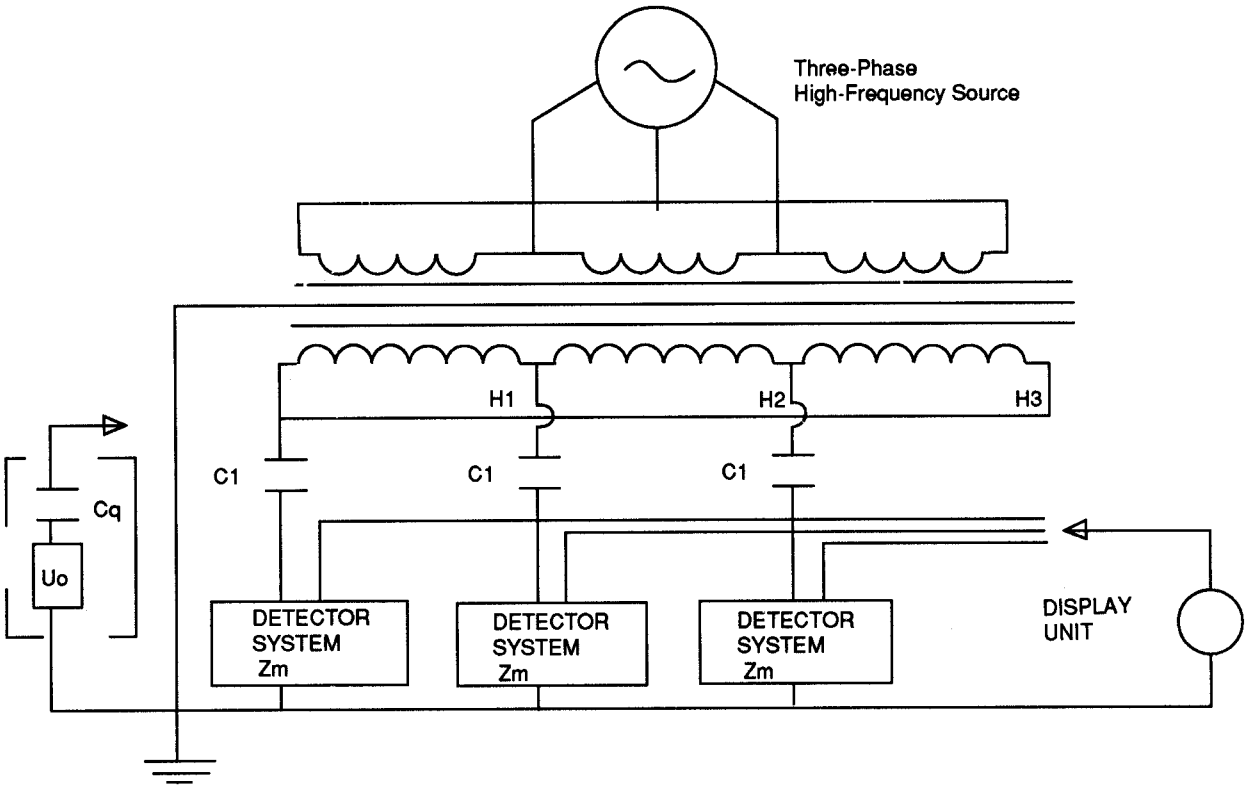

Figure 5— Induced Voltage Balanced Winding

Copyright © 1992 IEEE All Rights Reserved

Copyright The Institute of Electrical and Electronics Engineers, Inc.
Provided by IHS under license with IEEE
No reproduction or networking permitted without license from IHS Not for Resale

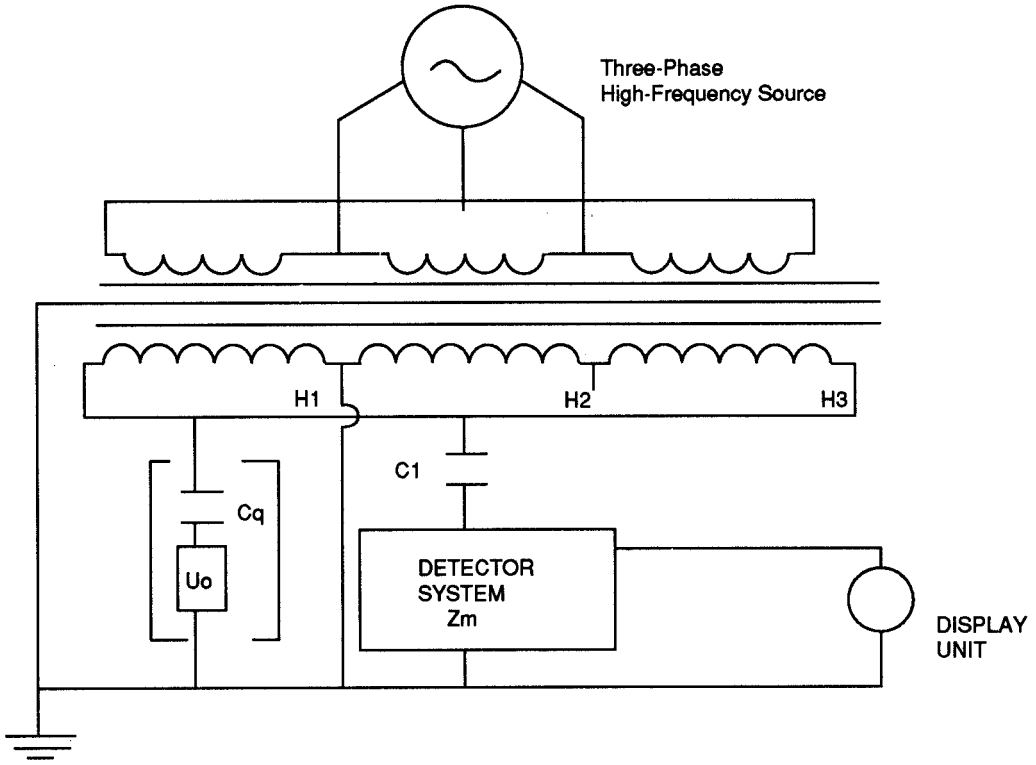

Figure 6— Induced Voltage One Corner Grounded

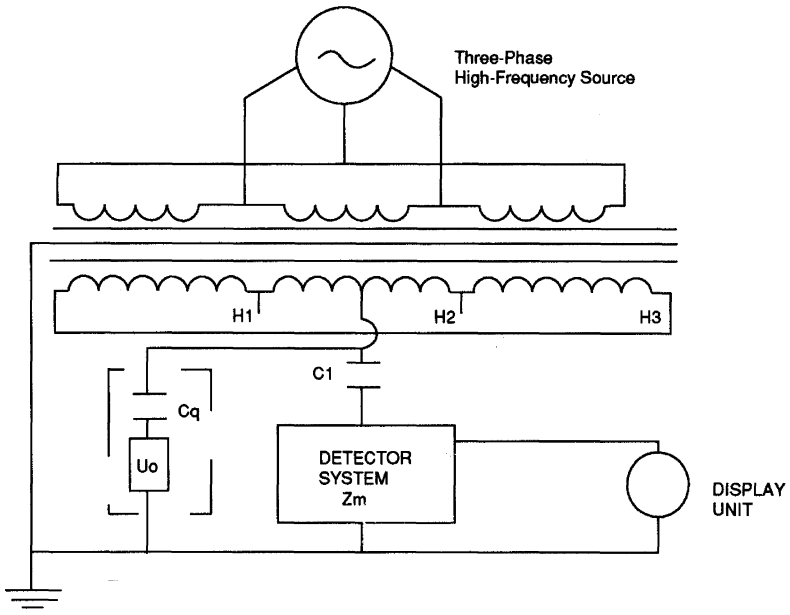

Figure 7— Induced Voltage Center Grounded Through the Detector System

Copyright © 1992 IEEE All Rights Reserved

Copyright The Institute of Electrical and Electronics Engineers, Inc.
Provided by IHS under license with IEEE
No reproduction or networking permitted without license from IHS
Not for Resale

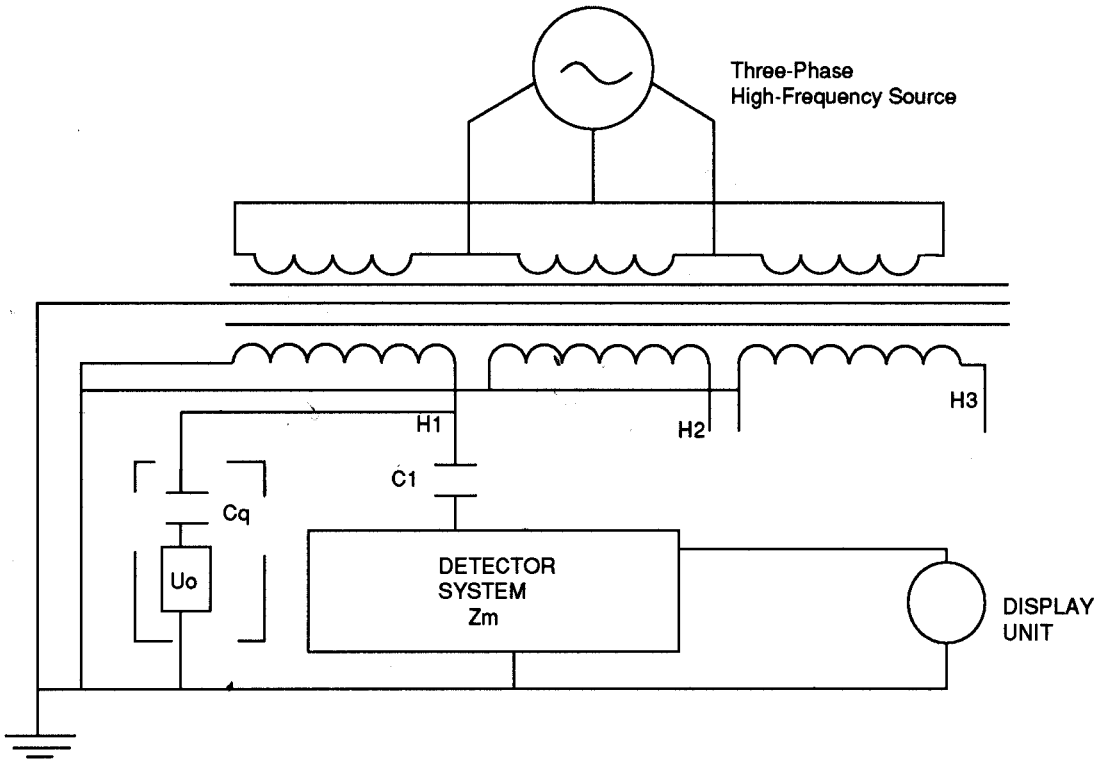

Figure 8— Induced Voltage Wye Connect With Neutral Grounded and the Detector on Line Terminal

Copyright © 1992 IEEE All Rights Reserved

Copyright The Institute of Electrical and Electronics Engineers, Inc.
Provided by IHS under license with IEEE
No reproduction or networking permitted without license from IHS Not for Resale

Copyright © 1992 IEEE All Rights Reserved

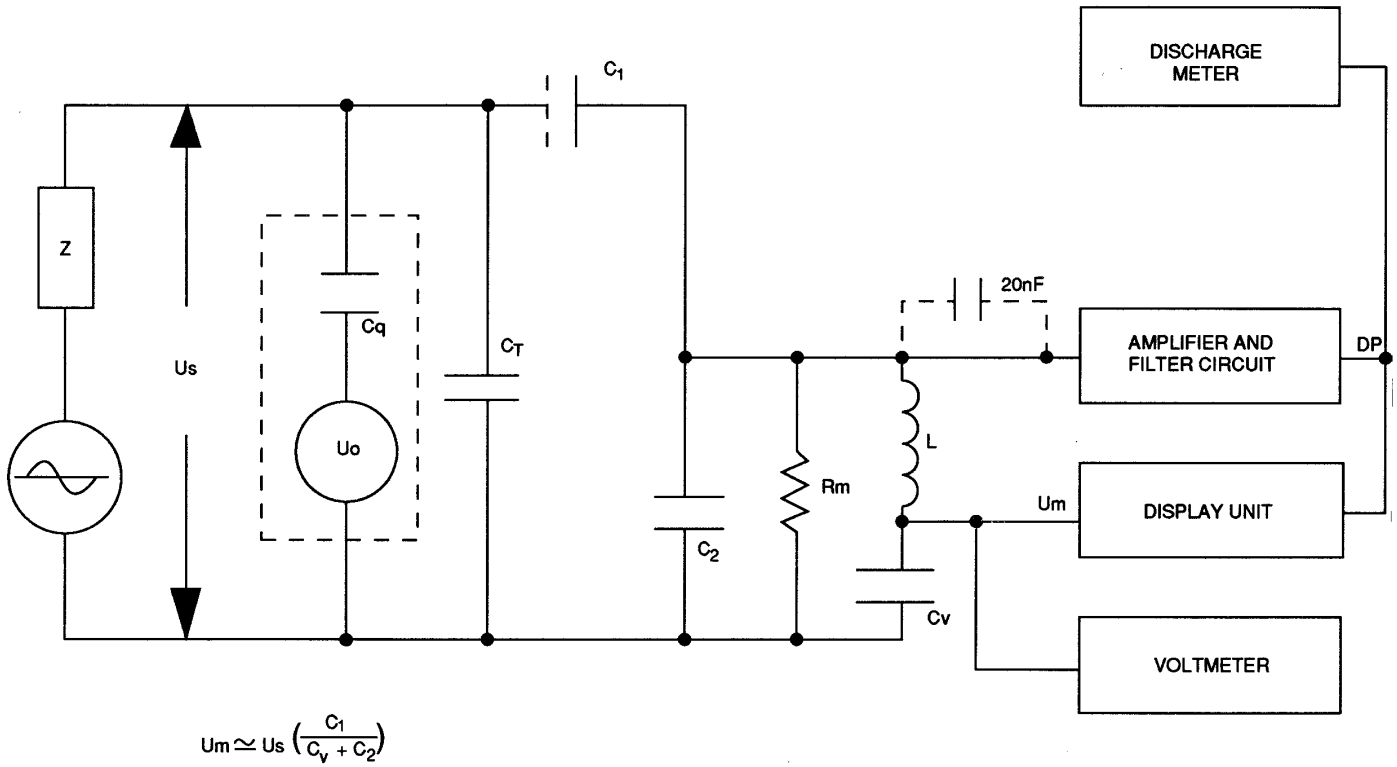

(Figs 9 and 10 are reprinted from ASTM STP 669, *Engineering Dielectrics, Vol. 1, Corona Measurement and Interpretation.*)

Copyright ASTM.
Reprinted with permission.

Figure 9— Partial Discharge Detection System (Configuration 1)

Copyright The Institute of Electrical and Electronics Engineers, Inc.
Provided by IHS under license with IEEE
No reproduction or networking permitted without license from IHS
Not for Resale

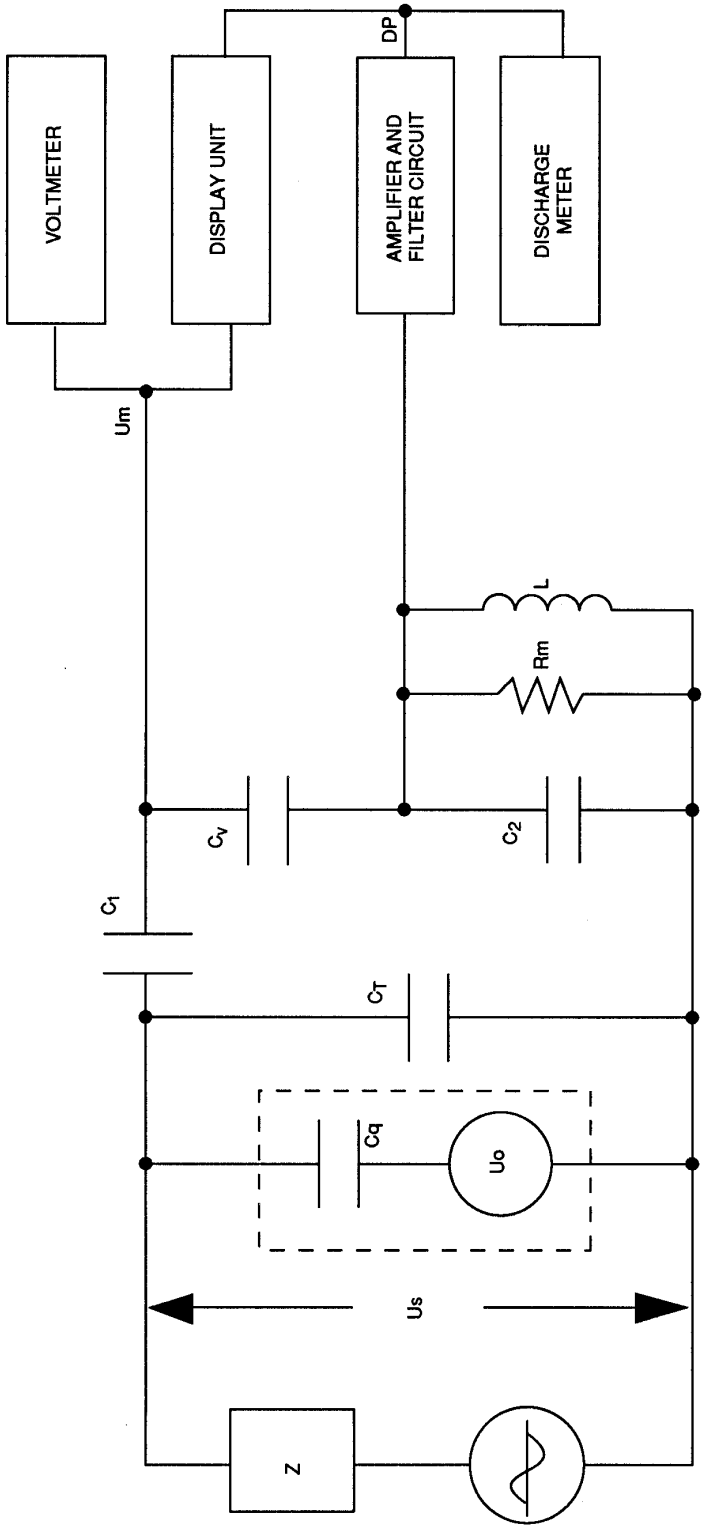

Copyright ASTM.
Reprinted with permission.

Figure 10— Partial Discharge Detection System (Configuration 2)

Copyright © 1992 IEEE All Rights Reserved

Not for Resale

Copyright The Institute of Electrical and Electronics Engineers, Inc.
Provided by IHS under license with IEEE
No reproduction or networking permitted without license from IHS

Test in accordance with IEEE Std C57.124 , Fig _____

Serial No. _____

Rating _____

Customer _____

Calibration:

Square wave generator volts peak-to-peak _____ V

Oscilloscope deflection peak-to-peak _____ D

Oscilloscope volt/div setting _____

Calibrating Capacitor _____ pFd

Sensitivity at _____ **v/div** = $\frac{v \times pFd}{D}$

= _____ pC/div.

Ambient Temperature _____ degrees C.

Coil	A			B			C		
Terminal	Start	Center	Finish	Start	Center	Finish	Start	Center	Finish
Voltmeter Reading PD Extinction									
Voltmeter Factor									
Volts									

Frequency of Power Source _____ Hz

Time Start of Test _____ : _____

Time End of Test _____ : _____

Test by: _____ **Date:** _____

Figure 11— Partial Discharge Test Record

Copyright © 1992 IEEE All Rights Reserved

Copyright The Institute of Electrical and Electronics Engineers, Inc.
Provided by IHS under license with IEEE
No reproduction or networking permitted without license from IHS Not for Resale

8. Bibliography

[B1] NEMA107-1964 (R1971), Methods of Measurement for Radio Influence Voltage of High-Voltage Apparatus.

[B2] ANSI C68.3-1976, ANSI Recommended Practice for the Detection and Measurement of Partial Discharges (Corona) During Dielectric Tests.

[B3] IEC 27 (1981), Partial Discharge Measurements, Second edition, International Electrotechnical Commission, Geneva, Switzerland.

[B4] IPCEA T-24-380-1979, Proposed Guide for Partial Discharge Test Procedure, Insulated Power Cable Engineers Association.

[B5] ANSI C63.2-1963 (R1969), Specifications for Radio-Noise and Field-Strength Meters, 0.015 to 30 Mega-cycles/ Second.

[B6] ASTM, D 1868-73, Detection and Measurement of Partial Discharge (Corona) Pulses in Evaluation of Insulation Systems, pp. 381-389, 1973.

[B7] NEMA TR1-1974, Transformers, Regulators and Reactors, Part 9.

[B8] Australian Standard AS 1018-1970, Recommendations for Partial Discharge Measurements.

[B9] IEC 763 (1980), Power Transformers, Part 3: Insulation Levels and Dielectric Tests, First edition, International Electrotechnical Commission, Geneva, Switzerland.

[B10] Quinn, G. E., “A Method for Detecting the Ionization Point on Electrical Apparatus,” AIEE Transactions on Electrical Engineering, vol. 59, pp. 680-682, Dec. 1940.

[B11] Sealy, W. C., Vogel, F. G., “A New Method of Obtaining Insulation Co-ordination of Transformers,” AIEE Transactions on Power Apparatus and Systems, pp. 116-122, Apr. 1953.

[B12] Liao, T. W., Kresge, J. S., “Detection of Corona in Oil at Very High Voltages,” A1EE Transactions on Power Apparatus and Systems, vol. 73, pp. 1389-1395, Dec. 1954.

[B13] Vogel, F. J., “Corona and Withstand Tests in Oil,” AIEE Transactions on Power Apparatus and Systems, vol. 78, pp. 23-28, Apr. 1959.

[B14] Hartill, E. R., Smith, L., James, R. E., Taylor, F. W., Ryder, D. H., “Some Aspects of Internal Corona Discharges in Transformers,” *CIGRE* Paper, no. 102, May 1962.

[B15] Hylten-Cavallius, N., Fryxell, J., “Corona in Power Transformers and Associated Test Problems,” *CIGRE* Paper, no. 104, May 1962.

[B16] Leuzinger, S., Moreau, J. L., “La mesure d'intensite des decharges partielles dans les transformateurs, ” Revue Generale de l'Electricite, vol. 72, no. 4, pp. 229-241, Apr. 1963.

[B17] Kreuger, F. H., “Discharger Detection in High-Voltage Equipment,” London: Temple Press Books, Ltd., 1964.

[B18] Ogihara, H., “Detection and Location of Coronas in Oil-Immersed Transformers with Corona Detector,” Electrical Engineering in Japan, vol. 84, no. 9, pp. 12-21, 1964.

Copyright © 1992 IEEE All Rights Reserved

Copyright The Institute of Electrical and Electronics Engineers, Inc.
Provided by IHS under license with IEEE
No reproduction or networking permitted without license from IHS Not for Resale

[B19] Brown, R. D., “Corona Measurement of High-Voltage Apparatus Using the Bushing Capacitance Tap,” IEEE Transactions on Power Apparatus and Systems, vol. PAS-84, pp. 667-671, Aug. 1965.

[B20] Narbut, P., “Transformer Corona Measurement Using Condenser Bushing Tap and Resonant Measuring-Circuits,” IEEE Transactions on Power Apparatus and Systems, vol. PAS-84, pp. 652-657, Aug. 1965.

[B21] Vora, J.P., Foster, S. L., “Power Transformer and Corona Testing,” IEEE Transactions on Power Apparatus and Systems, vol. 84, pp. 707-714, Aug. 1965.

[B22] Meador, J. R., Kaufman, R. B., Brustle, H. H., “Transformer Corona Testing,” IEEE Transactions on Power Apparatus and Systems, vol. 85, no. 8, pp. 893-900, Aug. 1966.

[B23] Ryder, D. H., James R. E., “Corona Testing of Power Transformers,” Electrical World (England), 1966, pp. 96-97, Jan. 24.

[B24] Dakin, T. W., Works, C. N., Miller, R. L., “Utilization of Peak-Reading Voltmeters and Recorders for Corona Measurement,” IEEE Transactions on Electrical Insulation, vol. EI-2, no. 2, pp. 75-82, Aug. 1967.

[B25] Ganger, B., Vorwerk, H. J., “Ionization Measurements on Transformers,” The Brown Boveri Review, vol. 54, no. 7, pp. 355-367, July 1967.

[B26] IEEE Committee Report, “Guide for Calibration of Test Equipment and Circuits for Measurement of Corona Pulses,” IEEE Transactions on Power Apparatus and Systems, vol. PAS-86, no. 10, pp. 1185-1191, Oct. 1967.

[B27] IEEE Committee Report, “Tests for Damaging Corona on Oil-Insulated Transformers,” IEEE Transactions on Power Apparatus and Systems, vol. PAS-86, no. 12, pp. 1592-1595, Dec. 1967.

[B28] Bertula, T., Palva, V., Talvio, E., “Partial Discharge Measurement on Oil-Paper Insulated Transformers,” *CIGRE* Paper, 12-07, June 10-20, 1968.

[B29] Dembinski, E. M., Douglas, J. L., “Calibration and Comparison of Partial Discharge and Radio-Interference Measuring Circuits,” IEE Proceedings, vol. 115, no. 9, pp. 1332-1340, Sept. 1968.

[B30] Fryxell, J., Agerman, E., Grundmark, B., Hessen, P., Lampe, W., “Performance of Partial Discharge Tests on Power Transformers,” *CIGRE* Paper, 12-04, June 10-20, 1968.

[B31] Gailhofer, G., Kury, H., Rabus, W., “Partial Discharge Measurements on Power Transformers Insulation, Principles and Practice,” *CIGRE* Paper, 12-15, June 10-20, 1968.

[B32] Kreuger, F. H., “Recommended Means for Calibrating and Checking Discharge Detection Circuit,” Appendix III to Progress Report of Study Committee, no. 2 (H. V. Cables), CIGRE Paper, 21-01, pp. 12-22, June 10-20, 1968.

[B33] Langlois-Berthelot, R., “Special Report for Group 12 (Transformers),” *CIGRE* Paper, 12-00, June 10-20, 1968.

[B34] Viale, F., Wind, G., Fallou, M., Leroy, G., Wendling, J., “Mise en oeuvre et interpretation des mesures des decharges partiel-les dans les transformateurs,” *Communication de le CIGRE*, no. 12-12, June 10-20, 1968.

[B35] Wetzel, R. E., Praehauser, T. C., “Measurement of Partial on Transformers and their Elements,” *CIGRE* Paper, 12-10, June 10-20, 1968.

[B36] Wherry, F. E., Toothman, L. R., Yakov, S., Preston, L. L., “The Significance of Corona Measurements on Transformers,” IEEE Transactions on Power Apparatus and Systems, vol. PAS-87, no. 11, pp 1889-1898, Nov. 1968.

Copyright © 1992 IEEE All Rights Reserved

Copyright The Institute of Electrical and Electronics Engineers, Inc.
Provided by IHS under license with IEEE
No reproduction or networking permitted without license from IHS Not for Resale

[B37] Yakov, S., Honey, C. C., Madin, A. B., Keil, C., “Corona in Power Transformers,” *CIGRE* Conference Paper, 12-06, Paris, France, June 10-20, 1968.

[B38] CIGRE Working Group 21-03, “ Significance of Discharge Detection,” Electra, no. 11, pp 53-60, Dec. 1969.

[B39] CIGRE Working Group 21-03, “Recognition of Discharges,” Electra, no. 11, pp. 6198, Dec. 1969.

[B40] Kawaguchi, Y., Yanabu, S., “Partial Discharge Measurement on High-Voltage Power Transformers,” IEEE Transactions on Power Apparatus and Systems, vol. PAS-88, no. 8, pp. 1187-1194, Aug. 1969.

[B41] McMath, J. C. P., Raghuveer, M. R., ”Factors Influencing Corona (Internal Discharge) Testing of Transformers,” Canadian Electrical Association, Montreal, Canada, Mar. 24-27, 1969.

[B42] Moore, H. R., Boaz, V. L., Dakin, T. W., “Corona Measuring Techniques for Power Transformers,” IEEE Winter Power Meeting, New York, NY, Paper no. 69CP-34-PWR, Jan. 26-31, 1969.

[B43] Norris, E. T., “Corona in Power Transformer Insulation,” Electrical Review, pp. 305-308, Aug. 29, 1969.

[B44] Beer, G., Oberti, A., Bossi, A., Mirra, C., “Contribution experimentale a l'etude de la degradation produite par des decharges partielles dans le papier isolant impregne a l'huile,” *CIGRE* Paper, 15-02, Aug. 24-Sept. 2, 1970.

[B45] Bertula, T., Saunamaki, Y., Ostman, No., “Viellissement de l'isolation papier-huile vue plus specialement, sous l'angle de l'influence du champ electrique sur les impuretes contenues dans l'huile,” *CIGRE* Paper, 15-06, Aug. 24-Sept. 2, 1970.

[B46] Boyles, C. R., Hinton, R. A., “Seven Years of Corona Testing,” IEEE Winter Power Meeting, New York, Paper #70 CP120-PWR, Jan. 25-30, 1970.

[B47] Harrold, R. T., Sletten, A.M., “Corona Location in Transformers by Radio Frequency Spectrum Analysis,” Part I and II, IEEE Transactions on Power Apparatus and Systems, vol. PAS-82, no. 7, pp. 1584-1602, Sept./Oct.1970.

[B48] Iliff, G. W., “Alternate Low-Frequency Dielectric Tests of Delta Transformer Windings,” IEEE Transactions on Power Apparatus and Systems, vol. PAS-89, no. 6, pp. 1277-1281, Jul./Aug. 1970.

[B49] James, R. E., “Discharge Detection in High-Voltage Power Transformers,” IEE Proceedings, vol. 117, no. 7, pp. 1352-1362, July 1970.

[B50] Mole, G., “Basic Characteristics of Corona Detector Calibrators,” IEEE Transactions on Power Apparatus and Systems, vol. PAS-89, no. 2, pp 198-204, Feb. 1970.

[B51] Zepic, Z., Preston, L.L., “Evaluation of Partial Discharge Measurements Particularly in their Application to Transformer Testing,” IEEE PES Winter Power Meeting, New York, NY, Paper No. 70CP-119-PWR, Jan. 25-30, 1970.

[B52] CIGRE Study Committee No. 12, “Measurement of Partial Discharges in Transformers,” Electra, no. 19, pp. 13-65, Nov. 1971.

[B53] Harrold, R. T., “Voltage Vector Analysis for Corona Location in Transformers,” IEEE Transaction on Power Apparatus and Systems, vol. PAS-90, pp. 2339-2348, 1971.

[B54] Hessen, P., Lampe, W., “Partial Discharges Triggered by Switching Surge in Power Transformers,” IEEE Summer Meeting and International Symposium on High Power Testing, Portland, OR, Paper 71TP204-PWR, July 18-23, 1971.

 Copyright © 1992 IEEE All Rights Reserved

Copyright The Institute of Electrical and Electronics Engineers, Inc.
Provided by IHS under license with IEEE
No reproduction or networking permitted without license from IHS Not for Resale

[B55] Izeki, N., Kurahashi, A., Matsuura, K., “Behavior of Oil Corona and Damage of Transformer Insulation,” IEEE Transactions on Power Apparatus and Systems, vol., PAS-71, pp. 2330-2339, Sept./Oct.1971.

[B56] Bartnikas, R., “Effect of Pulse Rise Time on the Response of Corona Detectors,” IEEE Transactions on Electrical Insulation, vol. EI-7, no. 1, pp. 3-8, Mar. 1972.

[B57] Bellaschi, P. L., “Power Transformer Corona Testing-the Long-Time Test,” Transmission and Distribution, pp. 40-41, June 1972.

[B58] CIGRE Working Group 03, “Elimination of Interference in Discharge Detection,” Electra, no. 21, pp. 55-72

[B59] Vogel, F. J., “Corona Measurements and their Interpretation Applied to Oil Insulated Transformers,” IEEE Transactions on Power Apparatus and Systems, vol. PAS-91, pp. 2505-2509, Nov./Dec. 1972.

[B60] Bartnikas, R., “Use of a Multichannel Analyzer for Corona Pulse-Height Distribution Measurements on Cables and Other Electrical Apparatus,” IEEE Transactions on Instrumentation and Measurement, vol. IM-22, no. 4, pp. 403-407, Dec. 1973.

[B61] Dix, J. W., Hickling, G. H., Raju, B. P., “Partial Discharge Measurement and its Impact on Alternating Over-Potential Tests on Transformers,” IEE Conference on Diagnostic Testing of HV Power Apparatus in Service, London, England,Conference Digest, pp. 31-39, Mar. 6-8, 1973.

[B62] Douglas, J. L., “Calibration of Circuits for Measuring Partial Discharges in EHV Transformers,” IEE Conference on Diagnostic Testing of HV Power Apparatus in Service, London, England, pp. 40-47, Mar. 1973.

[B63]]Harrold, R. T., Dakin, T. W., “The Relationship Between the Picocoulomb and Microvolt for Corona Measurements on HV Transformers and Other Apparatus,” IEEE Transactions on Power Apparatus and Systems, vol. PAS-92, no. 1, pp. 187-193, Jan./Feb. 1973.

[B64] Raju, B. P., Hickling, G. H., Morris, I., “Experience with Partial Discharge Measurements at More Than One Terminal on a Transformer,” IEE Conference on Diagnostic Testing of High-Voltage Apparatus in Service, London, England, Mar. 6-8, 1973.

[B65] CIGRE Working Group 12-01, “General Report of Group 12-01,” Electra, no. 37, pp. 64-74, Dec. 1974.

[B66] Douglas, J. L., Pratt, F. C., Rushton, F., “A Critical Assessment of Methods of Measuring Partial Discharges in EHV Transformers,” *CIGRE* Conference Paper, no. 1203, Paris, France 1974.

[B67] Myklebust, R., Hellman, P. A., “Measuring Techniques for Evaluating Partial Discharges in AC Tests on Transformers and Reactors,” *CIGRE* Conference Paper, 12-02, Paris, France, Aug. 21-29, 1974.

[B68] Raju, B. P., “Possible Errors with Partial Discharge Measurements on Transformers,” Electrical Review, pp. 205-206, Aug. 16, 1974.

[B69] Black, I. A., “A Pulse Discrimination System for Discharge Detection in Electrically Noisy Environments,” International High-Voltage Symposium, Zurich, Switzerland, Sept. 1975.

[B70] Dolezal, I. F., “Dieletric Test Requirements and Factory Test Experiences on High Voltage Power Transformers,” IEEE PES Winter Meeting, New York, NY, Paper C 75-1474, Jan. 26-31, 1975.

[B71] Austin, J., James R. E., “On-Line Digital Computer System for Measurement of Partial Discharges in Insulation Structures,” IEEE Transactions on Electrical Insulation, vol. EI-11, no. 4, pp. 129-139, Dec. 1976.

Copyright © 1992 IEEE All Rights Reserved

Copyright The Institute of Electrical and Electronics Engineers, Inc.
Provided by IHS under license with IEEE
No reproduction or networking permitted without license from IHS Not for Resale

[B72] Barutti, A., ”Measurements and Localization of Partial Discharges: A Step Forward,” In Italian, Technol, Elettrica (Italy), no. 11, pp. 76-79, Nov. 1976.

[B73] CIGRE Working Group 12.01, “Measurement of Partial Discharges in Transformers,” Electra, no. 47, pp. 37-47, July 1976.

[B74] Takahashi, E., Tsutsumi, U., Okuyama, K., Ogata, F., “Partial Discharge Characteristics of Oil-Immersed Insulation Systems Under DC, Combined AC-DC and DC Reversed Polarity Voltage,” IEEE Transactions on Power Apparatus and Systems, vol PAS-95, no. 1, pp. 411-420, Jan./Feb. 1976.

[B75] James, R. E., “Future Measurement Systems for Partial Discharge Testing of Power Transformers,” Electric Energy Conference, Sydney, Australia, Conference Digest, pp. 149-155, Sept. 29-30, 1977.

[B76] Musil, R. J., Schopper, E., Foschum, H., “Behavior of Transformer Insulation Under Short-Time Overvoltage,” IEEE Transactions on Power Apparatus and Systems, vol. PAS-96, no. 2, pp. 614-618, Mar./Apr. 1977.

[B77] Senkevich, E. D., Shtern, E. N., “Partial Discharge Diagnostics in Models of Transformer Internal Insulation,” Soviet Electrical Engineering (USA), vol. 48, no. 4, pp. 47-50,1977.

[B78] Veverka, A., “Measuring of Partial Discharges in Transformers,” Elektrotech, Obz. (Szechoslovak), vol. 66, no. 9, pp. 524-527, Sept .1977.

[B79] Kudratillaev, A. S., Sultanov, E. S., Yakubov, D. S., “A Study of the Elctro-Acoustic Characteristics of Partial Discharges in Transformer Insulation,” Soviet Power Engineering, no. 6, June 1978.

[B80] Leschanz, A., Mayer, D., Schopper, E., “A Partial Discharge Measurement Unit for Large Transformers,” (in German) Electrotech. Maschinenbau (Austria), vol. 95, no. 12, pp. 561-564, Dec. 1978.

[B81] Nattrass, D. A., “Partial Discharges in Power Transformers,” Electrical Review, vol. 202, no. 21, pp. 28-29, June 2, 1978.

[B82] Tanaka, T., Okamoto, T., “A Minicomputer-Based Partial Discharge Measurement System,” IEEE International Symposium on Electrical Insulation, pp 86-89, 1978.

[B83] Ahmed, A. S., Zaky, A. A., “Calibration of Partial Discharge Detectors for Pulse-Height Distribution Analysis,” IEEE Transactions of Electrical Insulation, vol. EI-14, no. 5, pp. 281-284, Oct .1979.

[B84] Bartnikas, R., McMahon, E. J., “Corona Measurement and Interpretation,” Eng, Dielectrics, vol. 1, American Society for Testing and Materials, STP 669, 1979.

[B85] Higaki, M., Yako, Y., Moriyama, M. Hirano, M., Hiraiski, K., Kurita, K., “Static Electrification and Partial Discharges Caused by Oil Flow in Forced Oil Cooled Core Type Transformers,” IEEE Transactions on Power Apparatus and Systems, vol. PAS-98, no. 4, pp. 1259-1267, July/Aug.1979.

[B86] Keene, Jr., S. J., Lohmeir, W. L., “A Microprocessor-Based Transformer Test System,” IEEE Transactions on Instrumentation and Measurement, vol. IM-28, no. 4, pp. 314-316, Dec. 1979.

[B87] Nicolet, A., “Measure des decharges partielles dans les transformateurs,” *Revue Brown Boveri* (Suisse), vol. 66, no. 7, pp. 456-460, July 1979.

[B88] Rabus, W., “The Partial Discharge Circuit of Constant Intensity and PD Measurements on Transformers,” Etz Archiv (Germany), vol. H. no. 12, pp. 351-354, Dec. 1979.

Copyright © 1992 IEEE All Rights Reserved

--`,-`-`,,`,,`,`,,`---

Copyright The Institute of Electrical and Electronics Engineers, Inc.
Provided by IHS under license with IEEE
No reproduction or networking permitted without license from IHS Not for Resale

[B89] Yakov, S., "Volt-time Relationships for PD Inception in Oil Paper Insulation," Electra (France), no. 67, pp. 17-28, Dec. 1979.

[B90] Black, I. A., Leung, N. K., "The Application of the Pulse Discrimination System to Measurement of Partial Discharges in Insulation Under Noisy Conditions," IEEE International Symposium on Electrical Insulation, Boston, MA, pp. 167-170, June 1980.

[B91] Kelen, A., "Partial Discharge Pulse Distribution Analysis as a Tool for Assessing Defects in High-Voltage Rotating Machine Insulation," Canadian Electrical Association International Symposium on Generator Insulation Tests, Toronto, Ontario, June 12-13, 1980.

[B92] Kraaij, D. J., "Power Transformer Testing," Part 7, (in German), Elektrotechnik, (Switzerland), vol. 31, no. 9, pp. 101-104, Nov. 1980.

[B93] Mangiaviacchi, C., Tius, V., "Errors in Partial Discharges Measurement and Detection Systems Employing Transformer Impedances," Energia Elettrica (Italy), vol. 57, no. 3, pp. 163-171, Mar. 1980.

[B94] Parker, R. D., DeLong, R. V., Zelik, J. A., "Accurate Corona Detector Calibrator," IEEE Transactions on Electrical Insulation, vol. EI-15, no. 6, pp. 451-454, Dec. 1980.

[B95] Kraaij, D. J., Schemel, G. S., Wegscheider, F. M., "Power Transformer Testing," Part 8, (in German), Elektrotechnik, (Switzerland), vol. 32, no. 1, pp. 81-85, Jan. 1981.

[B96] Oommen, T. V., Moore, H. R., Luke, L. E., "Experience with Gas-In-Oil Analysis Made During Factory Tests on Large Power Transformers," IEEE PES Summer Meeting, Portland, OR, Paper 81SM-352-4, July 26-31, 1981.

[B97] Baeher, R., Breuer, W., Flottmeyer, F., Kotschnigg, J., Muller, R., Nieschwietz, H., "Diagnostic Techniques and Preventive Maintenance Procedures for Large Transformers," *CIGRE* Paper, 12-13, Sept. l-9, 1982.

[B98] Bohdanowicz, A., Palmer, S., "Some Results of Partial Discharge Measurements by Means of Charge Detectors and Radio Voltage Meter of Simulated Corona Pulses Injected Into a Power Transformer," Canadian Electrical Association Apparatus Meeting, Montreal, Canada, Mar. 17, 1982.

[B99] Carter, W. J., "Practical Aspects of Apparent Charge Partial Discharge Measurements," IEEE Transactions on Power Apparatus and Systems, vol. PAS-101, no. 7, pp. 1985-1989, July 1982.

[B100] Kraaij, D. J., Schemel, G. S., Wegscheider, F. M., "Die Prufung von Leistungstransformatoren," Elektrotechnik, (Switzerland), vol. 32, no. 1, pp. 88-85, Feb. 1981.

Copyright © 1992 IEEE All Rights Reserved

Copyright The Institute of Electrical and Electronics Engineers, Inc.
Provided by IHS under license with IEEE
No reproduction or networking permitted without license from IHS Not for Resale

Annex Partial Discharge Recognition

(Informative)

(This Appendix is not a part of WEE Std C57.124-1991, IEEE Recommended Practice for the Detection of Partial Discharge and the Measurement of Apparent Charge in Dry-Type Transformers, but is included for information only.)

One of the greatest advantages of the wide-band method is the ease with which the results can be displayed on a cathode ray oscilloscope, which means that the partial discharge signal can be observed in terms of the phase of the applied test voltage. This is of great help to determine whether or not the discharges originate inside the test object. The pulse polarity can also be identified and pulses may be counted and sorted according to their amplitude and/or polarity. Digital processing of partial discharge signals by computer is also possible.

Examples of the most common oscillographic patterns encountered during partial-discharge tests on large transformers appear in Fig A1 (see also [1] and [7].) Diagram (a) represents the case of air corona on the high-voltage electrode, while diagram (b) is for air corona on a point on the ground side. Such corona can usually be eliminated by selecting a high-voltage electrode of larger diameter for case (a), and by covering protrusions on and around the transformer with rounded metallic shields or semiconductive material, such as rubber, for case (b). These corona discharges are usually very large, but, it should be pointed out, they appear only during one half-cycle of the applied voltage. Small discharges are present on the other half-cycle, but are so low in amplitude that they usually can not be observed.

Case (c) occurs when ungrounded metallic objects are present on or near the transformer under test. The obvious solution in this case is to remove as many of the loose objects from the test area as possible and to ground the rest, especially metallic fences.

Case (d) is the result of a bad ohmic contact, usually inside the transformer, although it could also be from the connections outside. Note that in this case, the discharges occur on both sides of and at the zero-crossings of the test voltage.

Diagrams (e) and (f) represent partial discharges occurring within the insulation structure of a transformer. They are usually present on the increasing voltage slope of both half-cycles and do not normally cross the voltage peaks, although they may extend down to the zero-crossings. There is usually a fair amount of hysteresis present, but excessive hysteresis and rapidly decreasing inception voltage are indicative of partial discharges in gas bubbles. Diagram (e) represents partial discharges in oil-paper insulation or in gas bubbles while diagram (f) represents creeping discharges, which are usually higher in amplitude, but less numerous than those in case (e).

Diagrams (g) and (h) represent two cases of external interference. The first is typical of thyristor interference, the pulses being equally spaced and of roughly the same amplitude. Since the test-voltage frequency for transformers is usually different from the power frequency, the pulses are not synchronized. The number of pulses appearing during one cycle of the test voltage depends on the ratio of its frequency to that of the power system and on the particular design of the equipment producing the interference. Usually from two to six pulses are seen, even though fewer than two pulses may be present at every cycle. This is due to the fact that the eye tends to see many superposed cycles at the same time.

Diagram (h) is typical of a periodic signal with a frequency falling inside the bandwidth of the partial discharge detector. One such source of interference in North America is the navigational system LORAN C operating at 100 kHz. Other than the fact that they are not usually synchronized to the test voltage, interference signals are not usually dependent on the test-voltage level and do not normally disappear when the test voltage is lowered as partial discharge signals do. In normal situations, these characteristics suffice to identify the signals as interference.

Copyright © 1992 IEEE All Rights Reserved

Copyright The Institute of Electrical and Electronics Engineers, Inc.
Provided by IHS under license with IEEE
No reproduction or networking permitted without license from IHS Not for Resale

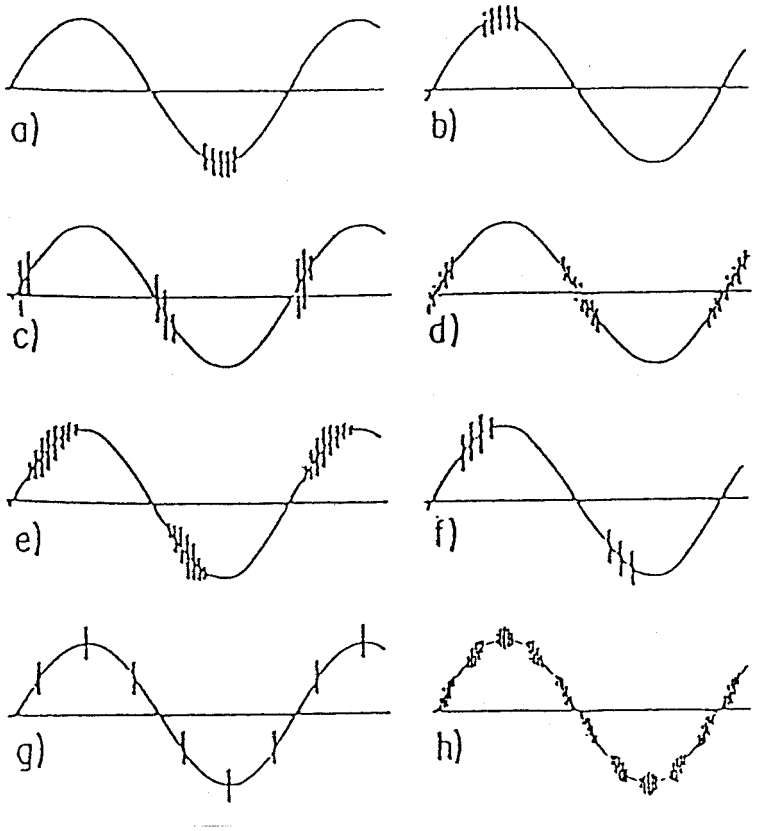

Figure A1 —Oscilloscope Response of Partial Discharge

Most common discharge and interference patterns encountered during partial-discharge tests on power transformers. Diagrams from (a) to (f) are after Kraaij et al. [B95]:

a) corona discharges on a high-voltage electrode
b) corona discharges on a grounded point
c) unearthed conductive object near the test object
d) noise due to a bad contact
e) partial discharges in oil-paper insulation or gas bubbles
f) surface (creeping) discharges in oil
g) interference due to thyristor pulses
h) interference due to a modulated periodic signal.

*This pattern may also occur in some types of internal discharges.

Copyright © 1992 IEEE All Rights Reserved

Copyright The Institute of Electrical and Electronics Engineers, Inc.
Provided by IHS under license with IEEE
No reproduction or networking permitted without license from IHS Not for Resale