IEEE Std C57.12.90-1999
(Revision of IEEE C57.12.90-1993)

IEEE Standard Test Code for Liquid-Immersed Distribution, Power, and Regulating Transformers

Sponsor

Transformers Committee
of the
IEEE Power Engineering Society

Approved 26 June 1999

IEEE Standards Board

Abstract: Methods for performing tests specified in IEEE Std C57.12.00-1993 and other standards applicable to liquid-immersed distribution, power, and regulating transformers are described. Instrument transformers, step-voltage and induction voltage regulators, arc furnace transformers, rectifier transformers, specialty transformers, grounding transformers, and mine transformers are excluded. This standard covers resistance measurements, polarity and phase-relation tests, ratio tests, no-load-loss and excitation current measurements, impedance and load loss measurements, dielectric tests, temperature tests, short-circuit tests, audible sound level measurements, calculated data, and certified test data.
Keywords: tests, transformers, transformer tests

The Institute of Electrical and Electronics Engineers, Inc.
3 Park Avenue, New York, NY 10016-5997, USA

Copyright © 1999 by the Institute of Electrical and Electronics Engineers, Inc.
All rights reserved. Published 30 December 1999. Printed in the United States of America.

Print: ISBN 0-7381-1789-7 SH94778
PDF: ISBN 0-7381-1790-0 SS94778

No part of this publication may be reproduced in any form, in an electronic retrieval system or otherwise, without the prior written permission of the publisher.

Copyright The Institute of Electrical and Electronics Engineers, Inc.
Provided by IHS under license with IEEE
No reproduction or networking permitted without license from IHS Not for Resale

IEEE Standards documents are developed within the IEEE Societies and the Standards Coordinating Committees of the IEEE Standards Association (IEEE-SA) Standards Board. Members of the committees serve voluntarily and without compensation. They are not necessarily members of the Institute. The standards developed within IEEE represent a consensus of the broad expertise on the subject within the Institute as well as those activities outside of IEEE that have expressed an interest in participating in the development of the standard.

Use of an IEEE Standard is wholly voluntary. The existence of an IEEE Standard does not imply that there are no other ways to produce, test, measure, purchase, market, or provide other goods and services related to the scope of the IEEE Standard. Furthermore, the viewpoint expressed at the time a standard is approved and issued is subject to change brought about through developments in the state of the art and comments received from users of the standard. Every IEEE Standard is subjected to review at least every five years for revision or reaffirmation. When a document is more than five years old and has not been reaffirmed, it is reasonable to conclude that its contents, although still of some value, do not wholly reflect the present state of the art. Users are cautioned to check to determine that they have the latest edition of any IEEE Standard.

Comments for revision of IEEE Standards are welcome from any interested party, regardless of membership affiliation with IEEE. Suggestions for changes in documents should be in the form of a proposed change of text, together with appropriate supporting comments.

Interpretations: Occasionally questions may arise regarding the meaning of portions of standards as they relate to specific applications. When the need for interpretations is brought to the attention of IEEE, the Institute will initiate action to prepare appropriate responses. Since IEEE Standards represent a consensus of all concerned interests, it is important to ensure that any interpretation has also received the concurrence of a balance of interests. For this reason, IEEE and the members of its societies and Standards Coordinating Committees are not able to provide an instant response to interpretation requests except in those cases where the matter has previously received formal consideration.

Comments on standards and requests for interpretations should be addressed to:

Secretary, IEEE-SA Standards Board
445 Hoes Lane
P.O. Box 1331
Piscataway, NJ 08855-1331
USA

Note: Attention is called to the possibility that implementation of this standard may require use of subject matter covered by patent rights. By publication of this standard, no position is taken with respect to the existence or validity of any patent rights in connection therewith. The IEEE shall not be responsible for identifying patents for which a license may be required by an IEEE standard or for conducting inquiries into the legal validity or scope of those patents that are brought to its attention.

Authorization to photocopy portions of any individual standard for internal or personal use is granted by the Institute of Electrical and Electronics Engineers, Inc., provided that the appropriate fee is paid to Copyright Clearance Center. To arrange for payment of licensing fee, please contact Copyright Clearance Center, Customer Service, 222 Rosewood Drive, Danvers, MA 01923 USA; (978) 750-8400. Permission to photocopy portions of any individual standard for educational classroom use can also be obtained through the Copyright Clearance Center.

Copyright The Institute of Electrical and Electronics Engineers, Inc.
Provided by IHS under license with IEEE
No reproduction or networking permitted without license from IHS
Not for Resale

Introduction

(This introduction is not a part of IEEE Std C57.12.90-1999, IEEE Standard Test Code for Liquid-Immersed Distribution, Power, and Regulating Transformers.)

This document is a voluntary consensus standard. Its use may become mandatory only when required by a duly constituted legal authority or when specified in a contractual relationship. To meet specialized needs and to allow innovation, specific changes are permissible when mutually determined by the user and producer, provided that such changes do not violate existing laws and are considered technically adequate for the function intended.

When this standard is used on a mandatory basis, the word *shall* indicates mandatory requirements, and the words *should* and *may* refer to matters that are recommended or permissive, but not mandatory. The word *must* has been removed from this revision and replaced with *shall* to conform with the *IEEE Standards Style Manual*.

This revision of IEEE Std C57.12.90 separates the Test Code, Part I of Std C57.12.90-1993, from Part II of IEEE Std C57.12.90-1993, IEEE Guide for Short-Circuit Testing of Distribution and Power Transformers. Part II of C57.12.90-1993 will become a new IEEE Transformers Committee (C57) document separate from the Test Code.

Many of the changes incorporated into this revision either are editorial, or have been made to make the documents more closely conform the *IEEE Standards Style Manual*. Some changes have been made to correct errors in previous revisions.

Periods have been deleted from the endings of some subheadings, and the words *delta* and *wye,* where possible, are now spelled out to replace symbols in text. The text in Clauses 1–4 has been rearranged, though much of the wording remains the same. Definitions listed in Clause 13 were removed since they duplicate information in Clause 3. Table 11 through Table 14 have been relabeled as Figure 31 through Figure 34.

Some of the changes that are of major importance to the revision of this standard are as follows and listed by clause numbers:

Clause 2: References—All revisions and reaffirmations are updated.
Clause 3: Definitions—Efficiency definition has been changed.
Clause 8: No-load Losses and Excitation Test—Figure 14 has been corrected for accuracy.
Clause 9: Load Losses and Impedance Voltage—Figure 17, Equation (10), Equation (12), and Table 1 have been corrected for accuracy. In 9.5.3, former Test 3 is now sequenced as Test 2, and former Test 2 is marked as Test 3.
Clause 10: A term “cathode-ray oscillograph” is replaced by “oscilloscope.” In 10.4.2, the first paragraph has been rewritten for clarity; and in 10.4.3, the last paragraph has been changed for clarity. In 10.10.3, Table 4 for two winding transformers with guard circuit, Method II has been corrected.
Clause 14: Several equations in 14.4.4.1 have been corrected.
Clause 15: A word “auxiliary” has been added to c) 3) in losses. Under c) 6), the statement “when specified *” has been replaced with ** (two asterisks), and Note 6 is added for further clarification.

In this standard’s revision all primary measurements are now shown in metric units with their corresponding English equivalent measurements in parenthesis.

A new Clause 15 has been added to replace a previous informative annex.

Technical revisions were prepared by various groups within the IEEE Transformers Committee and have been balloted and approved by these groups through the subcommittee level.

Copyright © 1999 IEEE. All rights reserved.

Copyright The Institute of Electrical and Electronics Engineers, Inc.
Provided by IHS under license with IEEE
No reproduction or networking permitted without license from IHS
Not for Resale

The working group that coordinated the compilation of this standard had the following membership:

Subhash C. Tuli, *Chair*

Kenneth J. Fleming

The following members of the balloting committee voted on this standard:

Edward J. Adolphson
Dennis J. Allan
George Allen
Raymond Allustiarti
Don Anderegg
Glenn Andersen
Stephen Antosz
Jim Antweiler
Jim C. Arnold
Jacques Aubin
Ron L. Barker
David A. Barnard
Mike Barnes
Oscar M. Bello
Edward A. Bertolini
Wallace B. Binder
Thomas E. Blackburn, III
William E. Boettger
Alain Bolliger
Joe V. Bonucchi
John D. Borst
William Carter
Alex Chan
Mark Christini
Don Chu
Jerry L. Corkran
Dan W. Crofts
Bob Del Vecchio
Tom Diamantis
Dieter Dohnal
Richard F. Dudley
John A. Ebert
Fred E. Elliott
Joe Foldi
Bruce Forsyth
Ron Fox
Michael A. Franchek
Dudley L. Galloway
Harry D. Gianakouros
Donald A. Gillies
Dave Goodwin
Richard D. Graham
Robert L. Grubb
Robert L. Grunert
Michael E. Haas
Geoff H. Hall
Ernst Hanique
N. Wayne Hansen
James H. Harlow
R. R. Hayes
William R. Henning
Keith R. Highton
Philip J. Hopkinson
John O. Hunt
Virendra Jhonsa
Anthony J. Jonnatti
Lars-Erik Juhlin
Gene Kallaur
C. J. Kalra
Joseph J. Kelly
Sheldon P. Kennedy
Vladimir Khalin
Brian Klaponski
Egon Koenig
Barin Kumar
John G. Lackey
Donald N. Laird
Michael Lau
Donald L. Lowe
Richard I. Lowe
Thomas Lundquist
Joseph Ma
Joe D. MacDonald
William A. Maguire
John W. Matthews
Jack W. McGill
Nigel P. McQuin
Charles Patrick McShane
Joe Melanson
Sam Michael
R. E. Minkwitz, Sr.
Harold R. Moore
W. E. Morehart
Daniel H. Mulkey
Chuck R. Murray
R. J. Musil
William H. Mutschler, Jr.
Carl G. Niemann
Russell C. Nordman
Larry Nunnery
Paul E. Orehek
Gerald A. Paiva
B. K. Patel
Dhiru S. Patel
Wesley F. Patterson
Jesse M. Patton
Paulette A. Payne
Thomas J. Pekarek
Dan D. Perco
Mark D. Perkins
Linden W. Pierce
R. Leon Plaster
Donald W. Platts
Bertrand Poulin
Richard L. Provost
Pierre Riffon
Mark Rivers
R. B. Robertson
Arlise L. Robinson, Jr.
John R. Rossetti
Paul Russman
Mahesh P. Sampat
V. S. N. Sankar
Subhas Sarkar
Leo J. Savio
Rick Sawyer
Wes W. Schwartz
Pat Scully
Georg Krause Sennewald
Dilipkumar Shah
Devki Sharma
Vic Shenoy
Hyeong Jin Sim
Tarkeshwar Singh
Kenneth R. Skinger
James E. Smith
Jerry W. Smith
J. Ed Smith
Leonard R. Smith
Stephen D. Smith
Steven L. Snyder
Ronald J. Stahara
Peter G. Stewart
John C. Sullivan
Ray C. Thomas
James A. Thompson
Robert W. Thompson
Thomas P. Traub
Al Traut
Edger R. Trummer
Subhash C. Tuli
Georges H. Vaillancourt
John Vandermaar
Robert A. Veitch
Loren B. Wagenaar
Barry H. Ward
Robert Whearty
A. L. Wilks
Charles W. Williams
William G. Wimmer
David Woodcock
W. E. Wrenn
F. N. Young

Copyright © 1999 IEEE. All rights reserved.
Copyright The Institute of Electrical and Electronics Engineers, Inc.
Provided by IHS under license with IEEE
No reproduction or networking permitted without license from IHS
Not for Resale

When the IEEE-SA Standards Board approved this standard on 26 June 1999, it had the following membership:

Richard J. Holleman, *Chair*

Donald N. Heirman, *Vice Chair*

Judith Gorman, *Secretary*

Satish K. Aggarwal	James H. Gurney	Louis-François Pau
Dennis Bodson	Lowell G. Johnson	Ronald C. Petersen
Mark D. Bowman	Robert J. Kennelly	Gerald H. Peterson
James T. Carlo	E. G. "Al" Kiener	John B. Posey
Gary R. Engmann	Joseph L. Koepfinger*	Gary S. Robinson
Harold E. Epstein	L. Bruce McClung	Akio Tojo
Jay Forster*	Daleep C. Mohla	Hans E. Weinrich
Ruben D. Garzon	Robert F. Munzner	Donald W. Zipse

*Member Emeritus

Also included is the following nonvoting IEEE-SA Standards Board liaison:

Robert E. Hebner

Greg Kohn
IEEE Standards Project Editor

--`,,`-`-`,,`,,`,`,,`---
Copyright © 1999 IEEE. All rights reserved.

Copyright The Institute of Electrical and Electronics Engineers, Inc.
Provided by IHS under license with IEEE
No reproduction or networking permitted without license from IHS
Not for Resale

Contents

1. Overview 1

1.1 Scope 1
1.2 Purpose 1
1.3 Word usage 1

2. References 2

3. Definitions 3

4. General 4

4.1 Types of tests 4
4.2 Test requirements 4
4.3 Test sequence 4
4.4 Instrumentation 5

5. Resistance measurements 5

5.1 Determination of cold temperature 5
5.2 Conversion of resistance measurements 5
5.3 Resistance measurement methods 6

6. Polarity and phase-relation tests 7

6.1 Subtractive and additive polarity 7
6.2 Polarity tests: single-phase transformers 9
6.3 Polarity and phase-relation tests: polyphase transformers 10

7. Ratio tests 13

7.1 General 13
7.2 Tolerances for ratio 14
7.3 Ratio test methods 14

8. No-load losses and excitation current 16

8.1 General 16
8.2 No-load loss test 16
8.3 Waveform correction of no-load losses 18
8.4 Temperature correction of no-load losses 19
8.5 Determination of excitation (no-load) current 19

9. Load losses and impedance voltage 20

9.1 General 20
9.2 Factors affecting the values of load losses and impedance voltage 20
9.3 Tests for measuring load losses and impedance voltage 21
9.4 Calculation of load losses and impedance voltage from test data 27
9.5 Zero-phase-sequence impedance 30

Copyright © 1999 IEEE. All rights reserved.
Copyright The Institute of Electrical and Electronics Engineers, Inc.
Provided by IHS under license with IEEE
No reproduction or networking permitted without license from IHS
Not for Resale

10. Dielectric tests ... 33

10.1 General ... 33
10.2 Switching impulse test procedures ... 34
10.3 Lightning impulse test procedures ... 36
10.4 Routine impulse test for distribution transformers ... 39
10.5 Low-frequency tests ... 42
10.6 Applied voltage tests ... 42
10.7 Induced voltage tests for distribution and Class I power transformers ... 42
10.8 Induced voltage test for Class II power transformers ... 44
10.9 PD measurement ... 45
10.10 Insulation power-factor tests ... 46
10.11 Insulation resistance tests ... 49

11. Temperature rise ... 50

11.1 Ambient temperature measurement ... 50
11.2 Liquid rise measurement ... 51
11.3 Average winding temperature-rise measurement ... 51
11.4 Other temperature measurements ... 53
11.5 Test methods ... 53
11.6 Correction of temperature rises for differences in altitude ... 56

12. Short-circuit tests ... 56

12.1 General ... 56
12.2 Test connections ... 57
12.3 Test requirements ... 58
12.4 Test procedure ... 59
12.5 Proof of satisfactory performance ... 60

13. Audible sound emissions ... 61

13.1 General ... 61
13.2 Instrumentation ... 62
13.3 Test conditions ... 62
13.4 Microphone positions ... 64
13.5 Sound power rating ... 65
13.6 Presentation of results ... 69

14. Calculated data ... 70

14.1 Reference temperature ... 70
14.2 Losses and excitation current ... 70
14.3 Efficiency ... 70
14.4 Voltage regulation of a constant-voltage transformer ... 76

15. Certified test data ... 77

Annex A (informative) Bibliography ... 80

Copyright © 1999 IEEE. All rights reserved.

Copyright The Institute of Electrical and Electronics Engineers, Inc.
Provided by IHS under license with IEEE
No reproduction or networking permitted without license from IHS
Not for Resale

IEEE Standard Test Code for Liquid-Immersed Distribution, Power, and Regulating Transformers

1. Overview

1.1 Scope

This standard describes methods for performing tests specified in IEEE Std C57.12.00-1993[1] and other standards applicable to liquid-immersed distribution, power, and regulating transformers. It is intended for use as a basis for performance, safety, and the proper testing of such transformers.

This standard applies to all liquid-immersed transformers except instrument transformers, step-voltage and induction voltage regulators, arc furnace transformers, rectifier transformers, specialty transformers, grounding transformers, and mine transformers.

Transformer requirements and specific test criteria are not a part of this standard, but are contained in appropriate standards, such as IEEE Std C57.12.00-1993, ANSI C57.12.10-1988, IEEE Std C57.12.20-1996, ANSI C57.12.40-1994, or in user specifications.

1.2 Purpose

The purpose of this standard is to provide test procedure information.

1.3 Word usage

When this standard is used on a mandatory basis, the word *shall* indicates mandatory requirements; and the words *should* or *may* refer to matters that are recommended or permitted, but not mandatory.

[1]Information on references can be found in Clause 2.

Copyright © 1999 IEEE. All rights reserved.

Copyright The Institute of Electrical and Electronics Engineers, Inc.
Provided by IHS under license with IEEE
No reproduction or networking permitted without license from IHS
Not for Resale

2. References

This standard shall be used in conjunction with the following publications.

ANSI C57.12.10-1988, American National Standard for Transformers 230 kV and Below, 833/958 through 8333/10 417 kVA, Single-Phase, and 750/862 through 60 000/80 000/100 000 kVA, Three-Phase without Load Tap Changing; and 3750/4687 through 60 000/80 000/100 000 kVA with Load Tap Changing—Safety Requirements.[2]

ANSI C57.12.20-1997, American National Standard for Overhead-Type Distribution Transformers 500 kVA and Smaller: High Voltage, 34 500 Volts and Below; Low Voltage 7970/13 800Y and Below—Requirements.

ANSI C57.12.22-1989, American National Standard for Transformers—Pad-Mounted, Compartmental-Type, Self-Cooled, Three-Phase Distribution Transformers with High-Voltage Bushings, 2500 kVA and Smaller: High-Voltage, 34 500 GrdY/19 920 Volts and Below; Low Voltage, 480 Volts and Below—Requirements.

ANSI C57.12.24-1994, American National Standard for Transformers—Underground-Type Three-Phase Distribution Transformers, 2500 kVA and Smaller: High-Voltage, 34 500 GrdY/19 920 Volts and Below; Low Voltage, 480 Volts and Below—Requirements.

ANSI C57.12.25-1990, American National Standard for Transformers—Pad-Mounted, Compartmental-Type, Self-Cooled, Single-Phase Distribution Transformers with Separable Insulated High-Voltage Connectors; High-Voltage, 34 500 GrdY/19 920 Volts and Below; Low-Voltage, 240/120 Volts; 167 kVA and Smaller—Requirements.

ANSI C57.12.40-1994, American National Standard for Secondary Network Transformers—Subway and Vault Types (Liquid Immersed)—Requirements.

ANSI C57.12.70-1978 (Reaff 1993), American National Standard Terminal Markings and Connections for Distribution and Power Transformers.

ANSI C57.92-1981 (Reaff 1992), American National Standard Guide for Loading Mineral-Oil-Immersed Power Transformers.[3]

ANSI C63.2-1996, American National Standard for Electromagnetic Noise and Field Strength Instrumentation, 10 kHz to 40 GHz—Specifications.

ANSI C84.1-1995, American National Standard for Electric Power Systems and Equipment—Voltage Ratings (60 Hertz).[4]

ANSI Sl.4-1983 (Reaff 1997), American National Standard for Sound Level Meters.

ANSI S1.11-1986 (Reaff 1998), American National Standard for Octave Band and Fractional-Octave-Band Analog and Digital Filters.

---

[2]This publication is available from both the Institute of Electrical and Electronics Engineers, 445 Hoes Lane, P.O. Box 1331, Piscataway, NJ 08855-1331, USA (http://standards.ieee.org/), and the Sales Department, American National Standards Institute, 11 West 42nd Street, 13th Floor, New York, NY 10036, USA (http://www.ansi.org/).

[3]This document was folded into IEEE Std C57.91-1995, which is available from the IEEE. ANSI C57.92-1981 is available from Global Engineering Documents, 15 Inverness Way East, Englewood, Colorado 80112, USA (http://www.global.ihs.com/).

[4]This publication is available from the Sales Department, American National Standards Institute, 11 West 42nd Street, 13th Floor, New York, NY 10036, USA (http://www.ansi.org/).

Copyright © 1999 IEEE. All rights reserved.
Copyright The Institute of Electrical and Electronics Engineers, Inc.
Provided by IHS under license with IEEE
No reproduction or networking permitted without license from IHS
Not for Resale

IEEE Std 4-1995, IEEE Standard Techniques for High Voltage Testing.[5]

IEEE Std 100-1996, The IEEE Standard Dictionary of Electrical and Electronics Terms, Sixth Edition.

IEEE Std C57.12.00-1993, IEEE Standard General Requirements for Liquid-Immersed Distribution, Power, and Regulating Transformers.

IEEE Std C57.12.23-1992 (Reaff 1999), IEEE Standard for Transformers—Underground-Type, Self-Cooled, Single-Phase Distribution Transformers With Separable, Insulated, High-Voltage Connectors; High-Voltage (24 940 GrdY/14 400 V and Below) and Low-Voltage (240/120 V, 167 kVA and Smaller).

IEEE Std C57.12.26-1992, IEEE Standard for Pad-Mounted, Compartmental-Type, Self-Cooled, Three-Phase Distribution Transformers for Use With Separable Insulated High-Voltage Connectors (34 500 Grd Y/19 920 V and Below; 2500 kVA and Smaller).

IEEE Std C57.12.80-1978 (Reaff 1992), IEEE Standard Terminology for Power and Distribution Transformers.

IEEE Std C57.19.00-1991 (Reaff 1997), IEEE Standard General Requirements and Test Procedures for Outdoor Power Apparatus Bushings.

IEEE Std C57.19.01-1991 (Reaff 1997), IEEE Standard Performance Characteristics and Dimensions for Outdoor Apparatus Bushings.

IEEE Std C57.98-1993 (Reaff 1999), IEEE Guide for Transformer Impulse Tests.

IEEE Std C57.106-1991 (Reaff 1998), IEEE Guide for Acceptance and Maintenance of Insulating Oil in Equipment.

IEEE Std C57.113-1991, IEEE Guide for Partial Discharge Measurement in Liquid-Filled Power Transformers and Shunt Reactors.

3. Definitions

Standard transformer terminology available in IEEE Std C57.12.80-1978 shall apply. Other electrical terms are defined in IEEE Std 100-1996, The IEEE Standard Dictionary of Electrical and Electronics Terms, Sixth Edition. Terms unique to this document are defined below.

3.1 actual time to crest: The time interval from the start of the transient to the time when the maximum amplitude is reached.

3.2 ambient sound pressure level: The sound pressure level measured at the test facility or at the substation without the transformer energized.

3.3 A-weighted sound level: Loudness that is measured with a sound level meter using the A-weighted response filter that is built into the meter circuitry. The A-weighting filter is commonly used to measure community noise, and it simulates the frequency response of the human ear.

[5]IEEE publications are available from the Institute of Electrical and Electronics Engineers, 445 Hoes Lane, P.O. Box 1331, Piscataway, NJ 08855-1331, USA (http://standards.ieee.org/).

Copyright © 1999 IEEE. All rights reserved.

Copyright The Institute of Electrical and Electronics Engineers, Inc.
Provided by IHS under license with IEEE
No reproduction or networking permitted without license from IHS Not for Resale

3.4 C-weighted sound level: Loudness that is measured with a sound level meter using the C-weighted filter that is built into the sound level meter. The C-weighting has only little dependence on frequency over the greater part of the audible frequency range.

3.5 efficiency (of a transformer): The ratio of the useful power output of a transformer to the total power input.

3.6 guard: One or more conducting elements arranged and connected on an electrical instrument or measuring circuit so as to divert unwanted currents from the measuring means.

3.7 semi-reverberant facility: A room with a solid floor and an undetermined amount of sound-absorbing materials on the walls and ceiling.

3.8 sound pressure level L_p in decibels: Twenty times the logarithm to the base ten of the ratio of the measured sound pressure (p) to a reference pressure (p_o) of 20 μPa, or

$$L_p = 20 \times \log_{10}\left(\frac{p}{p_o}\right)$$

3.9 sound power level L_w in decibels: Ten times the logarithm to the base ten of the emitted sound power (w) to a reference power of 10^{-12} W (w_o), or

$$L_w = 10 \times \log_{10}\left(\frac{w}{w_o}\right)$$

3.10 time to first voltage zero on the tail of the wave: The time interval from the start of the transient to the time when the first voltage zero occurs on the tail of the wave.

3.11 total losses: The sum of the no-load losses and the load losses.

4. General

4.1 Types of tests

Various types of tests (routine, design, conformance, and other) are defined in IEEE Std C57.12.80-1978.

4.2 Test requirements

A general summary of test requirements is included in Table 17 of IEEE Std C57.12.00-1993, and indicates by size which tests are normally considered routine, design, or other.

4.3 Test sequence

See 10.1.5.1 for the sequence of dielectric tests when lightning impulse or switching impulse tests are specified.

NOTE—To minimize potential damage to the transformer during testing, the resistance, polarity, phase relation, ratio, no-load loss and excitation current, impedance, and load loss tests (and temperature-rise tests, when applicable) should precede dielectric tests. Using this sequence, the beginning tests involve voltages and currents, which are usually reduced as compared to rated values, thus tending to minimize damaging effects to the transformer.

Copyright © 1999 IEEE. All rights reserved.
Copyright The Institute of Electrical and Electronics Engineers, Inc.
Provided by IHS under license with IEEE
No reproduction or networking permitted without license from IHS
Not for Resale

4.4 Instrumentation

Although the figures in this standard show conventional meters, adequate digital readout measuring devices and digital sampling techniques with computer calculations are considered to be satisfactory alternatives.

5. Resistance measurements

Resistance measurements are of fundamental importance for the following purposes:

a) Calculation of the I^2R component of conductor losses
b) Calculation of winding temperatures at the end of a temperature test
c) As a base for assessing possible damage in the field

5.1 Determination of cold temperature

The cold temperature of the winding shall be determined as accurately as possible when measuring the cold resistance. The precautions in 5.1.1 through 5.1.3 shall be observed.

5.1.1 General

Cold resistance measurements shall not be made on a transformer when it is located in drafts or when it is located in a room in which the temperature is fluctuating rapidly.

5.1.2 Transformer windings immersed in insulating liquid

The temperature of the windings shall be assumed to be the same as the average temperature of the insulating liquid, provided

a) The windings have been under insulating liquid with no excitation and with no current in the windings from 3 h to 8 h (depending upon the size of the transformer) before the cold resistance is measured.
b) The temperature of the insulating liquid has stabilized, and the difference between top and bottom temperature does not exceed 5 °C.

5.1.3 Transformer windings out of insulating liquid

The temperature of the windings shall be recorded as the average of several thermometers or thermocouples inserted between the coils, with care used to see that their measuring points are as nearly as possible in actual contact with the winding conductors. It should not be assumed that the windings are at the same temperature as the surrounding air.

5.2 Conversion of resistance measurements

Cold winding resistance measurements are normally converted to a standard reference temperature equal to the rated average winding temperature rise plus 20 °C. In addition, it may be necessary to convert the resistance measurements to the temperature at which the impedance loss measurements were made. The conversions are accomplished by Equation (1).

$$R_s = R_m \frac{T_s + T_k}{T_m + T_k} \quad (1)$$

--`,,`-`-`,,`,,`,`,,`---
Copyright © 1999 IEEE. All rights reserved.
Copyright The Institute of Electrical and Electronics Engineers, Inc.
Provided by IHS under license with IEEE
No reproduction or networking permitted without license from IHS
Not for Resale

where

R_s is resistance at desired temperature T_s ,
R_m is measured resistance,
T_s is desired reference temperature (°C),
T_m is the temperature at which resistance was measured (°C),
T_k is 234.5 °C (copper) or 225 °C (aluminum).

NOTE—The value of T_k may be as high as 230 °C for alloyed aluminum.

5.3 Resistance measurement methods

5.3.1 Bridge method

Bridge methods or high-accuracy digital instrumentation is generally preferred because of its accuracy and convenience, since it may be employed for the measurement of resistances up to 10 000 Ω. It should be used in cases where the rated current of the transformer winding to be measured is less than 1 A.

NOTE—For resistance values of 1 Ω or more, a Wheatstone Bridge (or equivalent) is commonly used; for values less than 1 Ω, a Kelvin Bridge (or equivalent) is commonly used. Some modern resistance bridges have capability in both ranges.

5.3.2 Voltmeter-ammeter method

The voltmeter-ammeter method is sometimes more convenient than the bridge method. It should be employed only if the rated current of the transformer winding is 1 A or more. Digital voltmeters and digital ammeters of appropriate accuracy are commonly used in connection with temperature-rise determinations. To use this method, the following steps should be taken:

a) Measurement is made with direct current, and simultaneous readings of current and voltage are taken using the connections of Figure 1. The required resistance is calculated from the readings in accordance with Ohm's Law. A battery or filtered rectifier will generally be found to be more satisfactory as a dc source than will a commutating machine. The latter may cause the voltmeter pointer to vibrate because of voltage ripple.

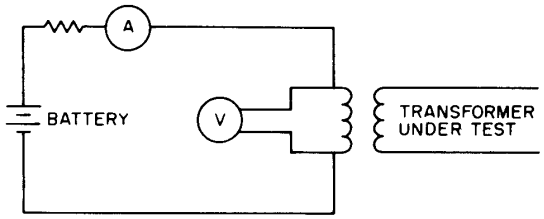

Figure 1—Connections for voltmeter-ammeter method of resistance measurement

b) To minimize errors of observation,
   1) The measuring instruments shall have ranges that will give reasonably large deflection.
   2) The polarity of the core magnetization shall be kept constant during all resistance readings.

NOTE—A reversal in magnetization of the core can change the time constant and result in erroneous readings.

Copyright © 1999 IEEE. All rights reserved.
Copyright The Institute of Electrical and Electronics Engineers, Inc.
Provided by IHS under license with IEEE
No reproduction or networking permitted without license from IHS
Not for Resale

c) The voltmeter leads shall be independent of the current leads and shall be connected as closely as possible to the terminals of the winding to be measured. This is to avoid including in the reading the resistances of current-carrying leads and their contacts and of extra lengths of leads.

To protect the voltmeter from injury by off-scale deflections, the voltmeter should be disconnected from the circuit before switching the current on or off. To protect test personnel from inductive kick, the current should be switched off by a suitably insulated switch.

If the drop of voltage is less than 1 V, a potentiometer or millivoltmeter shall be used.

d) Readings shall not be taken until after the current and voltage have reached steady-state values.

When measuring the cold resistance, preparatory to making a heat run, note the time required for the readings to become constant. That period of time should be allowed to elapse before taking the first reading when final winding hot resistance measurements are being made.

In general, the winding will exhibit a long dc time constant. To reduce the time required for the current to reach its steady-state value, a noninductive external resistor should be added in series with the dc source. The resistance should be large compared to the inductance of the winding. It will then be necessary to increase the source voltage to compensate for the voltage drop in the series resistor. The time will also be reduced by operating all other transformer windings open-circuited during these tests.

e) Readings shall be taken with not less than four values of current when deflecting instruments are used. The average of the resistances calculated from these measurements shall be considered to be the resistance of the circuit.

The current used shall not exceed 15% of the rated current of the winding whose resistance is to be measured. Larger values may cause inaccuracy by heating the winding and thereby changing its temperature and resistance.

When the current is too low to be read on a deflecting ammeter, a shunt and digital millivoltmeter or potentiometer shall be used.

6. Polarity and phase-relation tests

Polarity and phase-relation tests are of interest primarily because of their bearing on paralleling or banking two or more transformers. Phase-relation tests are made to determine angular displacement and relative phase sequence.

6.1 Subtractive and additive polarity

Windings arranged for subtractive polarity and additive polarity are shown in Figure 2 and Figure 3.

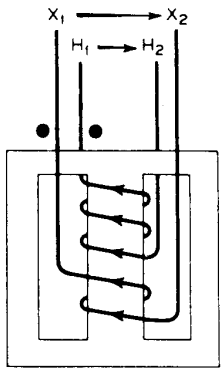

Figure 2—Windings: subtractive polarity

--`,,-`-`,,`,,`,`,,`---
Copyright © 1999 IEEE. All rights reserved.

Copyright The Institute of Electrical and Electronics Engineers, Inc.
Provided by IHS under license with IEEE
No reproduction or networking permitted without license from IHS
Not for Resale

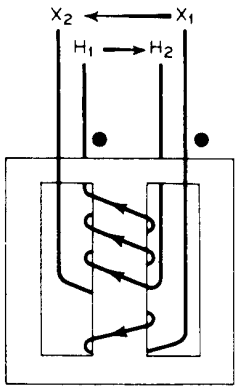

Figure 3—Windings: additive polarity

Leads and polarity marks arranged for subtractive polarity and additive polarity are shown in Figure 4 and Figure 5.

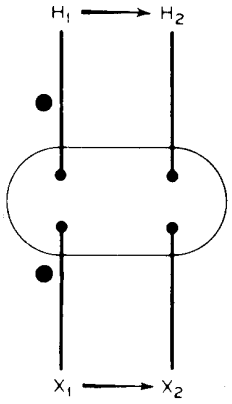

Figure 4—Leads and polarity marks: subtractive polarity

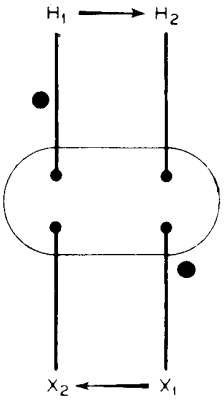

Figure 5—Leads and polarity marks: additive polarity

Copyright © 1999 IEEE. All rights reserved.
Copyright The Institute of Electrical and Electronics Engineers, Inc.
Provided by IHS under license with IEEE
No reproduction or networking permitted without license from IHS
Not for Resale

6.2 Polarity tests: single-phase transformers

Polarity tests on single-phase transformers shall be made in accordance with one of the following methods:

a) Inductive kick
b) Alternating voltage
c) Comparison
d) Ratio bridge

6.2.1 Polarity by inductive kick

The polarity of transformers with leads arranged as shown in Figure 2, Figure 3, Figure 4, and Figure 5 may be determined when making resistance measurements as follows:

a) With direct current passing through the high-voltage winding, connect a high-voltage direct-current voltmeter across the high-voltage winding terminals to obtain a small deflection of the pointer.
b) Transfer the two voltmeter leads directly across the transformer to the adjacent low-voltage leads, respectively.

NOTE—For example, in Figure 5, the voltmeter lead connected to H_1 will be transferred to X_2 as the adjacent lead, and that connected to H_2 to X_1.

c) Break direct-current excitation, thereby inducing a voltage in the low-voltage winding (inductive kick), which will cause deflection in the voltmeter. The deflection is interpreted in d) and e) below.
d) When the pointer swings in the opposite direction (negative), the polarity is subtractive.
e) When the pointer swings in the same direction as before (positive), the polarity is additive.

6.2.2 Polarity by alternating-voltage test

For transformers having a ratio of transformation of 30 to 1 or less, the H_1 lead shall be connected to the adjacent low-voltage lead (X_1 in Figure 6).

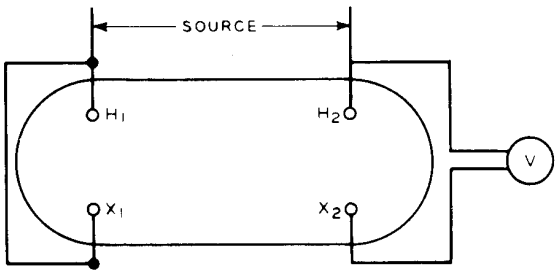

Figure 6—Polarity by alternating-voltage test

Any convenient value of alternating voltage shall be applied to the full high-voltage winding and readings taken of the applied voltage and the voltage between the right-hand adjacent high-voltage and low-voltage leads.

When the latter reading is greater than the former, the polarity is additive.

When the latter voltage reading is less than the former (indicating the approximate difference in voltage between the high-voltage and low-voltage windings), the polarity is subtractive.

Copyright © 1999 IEEE. All rights reserved.

Copyright The Institute of Electrical and Electronics Engineers, Inc.
Provided by IHS under license with IEEE
No reproduction or networking permitted without license from IHS
Not for Resale

6.2.3 Polarity by comparison

When a transformer of known polarity and of the same ratio as the unit under test is available, the polarity can be checked by comparison, as follows, similar to the comparison method used for the ratio test (see Figure 9 and Figure 10):

a) Connect the high-voltage windings of both transformers in parallel by connecting similarly marked leads together.
b) Connect the low-voltage leads, X_2, of both transformers together, leaving the X_1 leads free.
c) With these connections, apply a reduced value of voltage to the high-voltage windings and measure the voltage between the two free leads.

A zero or negligible reading of the voltmeter will indicate that the relative polarities of both transformers are identical.

An alternative method of checking the polarity is to substitute a low-rated fuse or suitable lamps for the voltmeter. This procedure is recommended as a precautionary measure before connecting the voltmeter.

6.2.4 Polarity by ratio bridge

The ratio bridge described in Clause 7 can also be used to test polarity.

6.3 Polarity and phase-relation tests: polyphase transformers

6.3.1 Polarity of polyphase transformers

Each phase of a polyphase transformer shall have the same relative polarity when tested in accordance with one of the methods described for single-phase transformers.

6.3.2 Phase-relation tests

6.3.2.1 Test for phasor diagram for transformers with a ratio of transformation of 30 to 1 or less

The phasor diagram of any three-phase transformer that defines the angular displacement and phase sequence can be verified as follows:

— Connect the H_1 and X_1 leads together to excite the unit at a suitably low three-phase voltage.
— Take voltage measurements between the various pairs of leads.
— Either plot these values or compare them for their relative order of magnitude with the help of the corresponding diagram in Figure 7 or Figure 8.

Typical check measurements are to be taken and their relative magnitudes also indicated.

6.3.2.2 Zigzag windings

Equal zig and zag windings are usually necessary for zigzag transformers, although unequal windings may be used for special applications.

No required test is proposed to determine the phase relationships between the line end and neutral end sections of a zigzag winding. However, it is recommended that a test connection be made to the junction of the two winding sections and tests be made during manufacture to prove the desired phase relationships. For

Copyright © 1999 IEEE. All rights reserved.
Copyright The Institute of Electrical and Electronics Engineers, Inc.
Provided by IHS under license with IEEE
No reproduction or networking permitted without license from IHS
Not for Resale

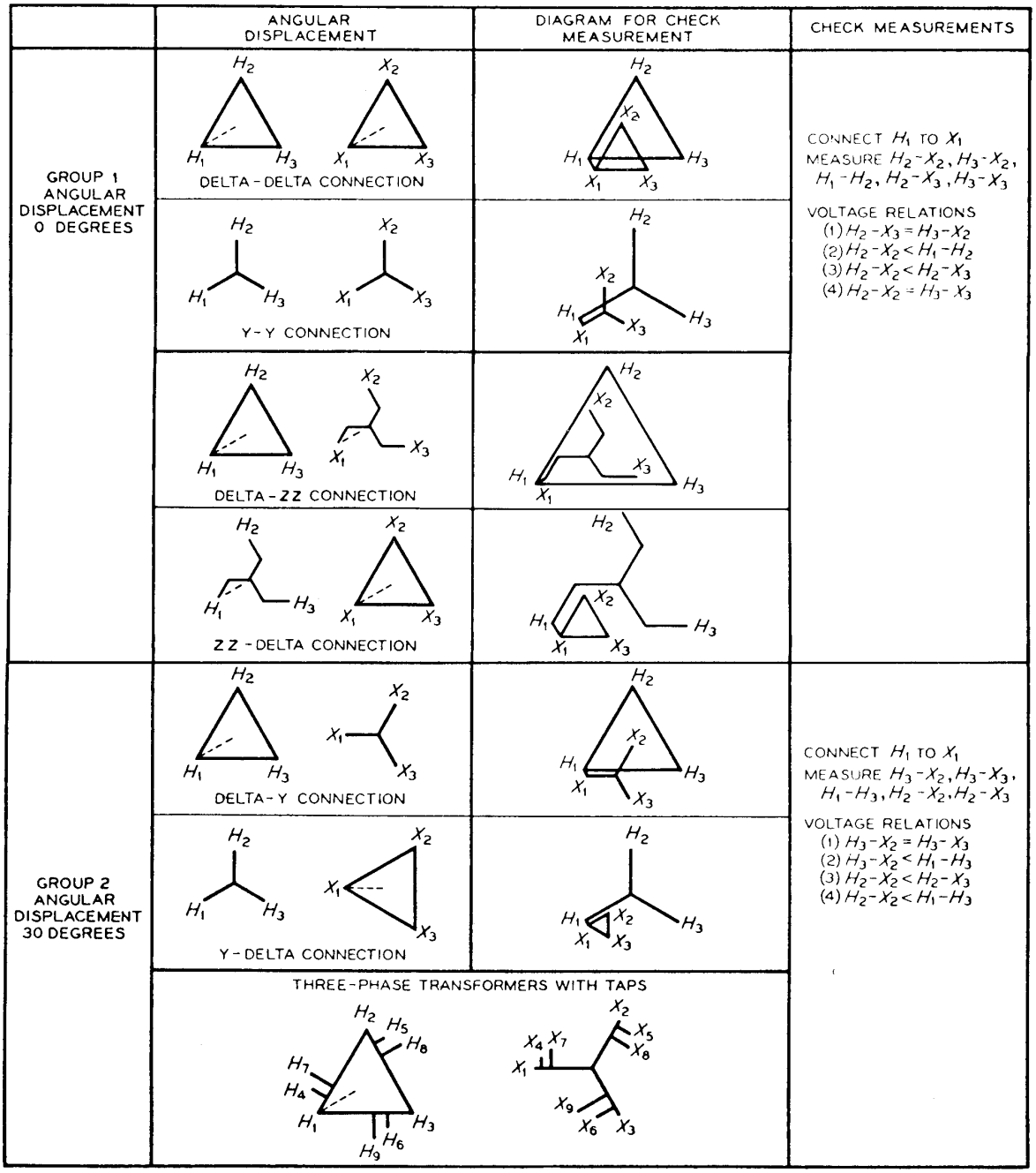

Figure 7—Transformer lead markings and voltage-phasor diagrams for three-phase transformer connections

Copyright © 1999 IEEE. All rights reserved.

Copyright The Institute of Electrical and Electronics Engineers, Inc.
Provided by IHS under license with IEEE
No reproduction or networking permitted without license from IHS
Not for Resale

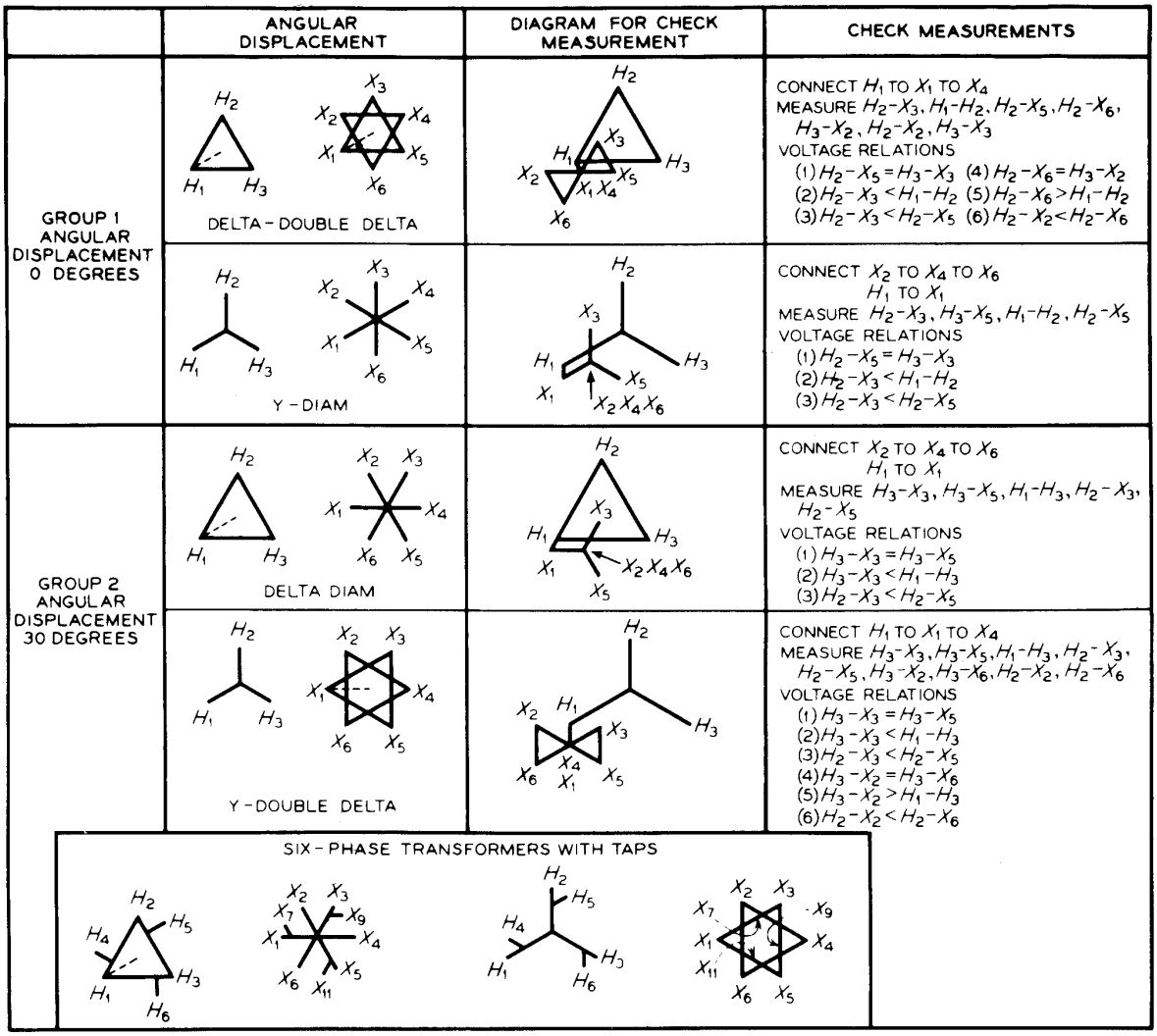

Figure 8—Transformer lead markings and voltage-phasor for six-phase transformer connections

the purpose of designation in Figure 7, zigzag windings are arbitrarily defined as windings whose line end section is rotated 60° counterclockwise with respect to the neutral end section.

6.3.2.3 Six-phase windings

Six-phase windings with no neutral connection shall be temporarily connected in delta (Δ) or wye (Y) for the test for phasor diagram.

6.3.2.4 Test of phase relation with ratio bridge

The ratio bridge described in Clause 7 can also be used to test phase relationships.

6.3.3 Phase-sequence test

The phase-sequence indicator may incorporate either a three-phase induction motor or a split-phase circuit.

Copyright © 1999 IEEE. All rights reserved.
Copyright The Institute of Electrical and Electronics Engineers, Inc.
Provided by IHS under license with IEEE
No reproduction or networking permitted without license from IHS
Not for Resale

It should be connected first to the higher voltage leads, the transformer excited three-phase at a low voltage suitable for the indicator, and the direction of rotation or the indication of the instrument noted.

The indicator is then transferred to the low-voltage side of the transformer by connecting the lead that was connected to H_1 to X_1, connecting the lead that was connected to H_2 to X_2, and connecting the lead that was connected to H_3 to X_3.

The transformer is again excited at a suitable voltage (without changing the excitation connections) and the indication again noted.

The phase sequence of the transformer is correct when the indication is the same in both cases.

Six-phase secondaries with no neutral connection also have to be connected temporarily in delta or wye for this test. When a six-phase neutral is available, the phase-sequence indicator leads should be transferred from H_1 to X_1, from H_2 to X_3, from H_3 to X_5, respectively; and the direction of rotation should be noted. The test should then be repeated by transferring the leads from H_1 to X_2, from H_2 to X_4, and from H_3 to X_6, respectively, and noting the indication, which should be the same as before.

6.3.3.1 Limitation of the phase-sequence test

The preceding method (phase-sequence test) does not disclose the angular displacement of the transformer.

6.3.3.2 Test of phase sequence with ratio bridge

The ratio bridge described in Clause 7 can also be used to test phase sequence.

7. Ratio tests

7.1 General

The turn ratio of a transformer is the ratio of the number of turns in the high-voltage winding to that in the low-voltage winding.

7.1.1 Taps

When a transformer has taps for changing its voltage ratio, the turn ratio is based on the number of turns corresponding to the normal rated voltage of the respective windings to which operating and performance characteristics are referred.

When the transformer has taps, the turn ratio shall be determined for all taps and for the full winding.

7.1.2 Voltage and frequency

The ratio test shall be made at rated or lower voltage and rated or higher frequency.

7.1.3 Three-phase transformers

In the case of three-phase transformers, when each phase is independent and accessible, single-phase power should be used; although, when convenient, three-phase power may be used.

Copyright © 1999 IEEE. All rights reserved.

Copyright The Institute of Electrical and Electronics Engineers, Inc.
Provided by IHS under license with IEEE
No reproduction or networking permitted without license from IHS
Not for Resale

7.1.4 Three-phase transformers with inaccessible neutrals

Transformers that have wye connections but do not have the neutral of the wye brought out shall be tested for ratio with three-phase power. Any inequality in the magnetizing characteristics of the three phases will then result in a shift of the neutral and thereby cause unequal phase voltages. When such inequality is found, the connection should be changed, either to a delta or to a wye connection, and the line voltages measured. When these are found to be equal to each other and of proper value (1.73 times the phase voltages when connected in wye), the ratio is correct.

7.2 Tolerances for ratio

See Clause 9 of IEEE Std C57.12.00-1993.

7.3 Ratio test methods

7.3.1 Voltmeter method

Two voltmeters shall be used (with voltage transformers when necessary), one to read the voltage of the high-voltage winding and the other, the low-voltage winding.

The two voltmeters shall be read simultaneously.

A second set of readings shall be taken with the instruments interchanged, and the average of the two sets of readings taken to compensate for instrument errors.

Voltage transformer ratios should yield approximately the same readings on the two voltmeters. Compensation for instrument errors by an interchange of instruments will otherwise not be satisfactory, and it will be necessary to apply appropriate corrections to the voltmeter readings.

Tests shall be made at not less than four voltages in approximately 10% steps, and the average result shall be taken as the true value. These several values should check within 1%. Otherwise, the tests shall be repeated with other voltmeters.

When appropriate corrections are applied to the voltmeter readings, tests may be made at only one voltage.

When several transformers of duplicate rating are to be tested, work may be expedited by applying the foregoing tests to only one unit, and then comparing the other units with this one as a standard, in accordance with the comparison transformer method discussed in 7.3.2.

7.3.2 Comparison method

A convenient method of measuring the ratio of a transformer is by comparison with a transformer of known ratio.

The transformer to be tested is excited in parallel with a transformer of the same nominal ratio, and the two secondaries connected in parallel but with a voltmeter or detector in the connection between two terminals of similar polarity (see Figure 9). This method is more accurate than the following alternative method because the voltmeter or detector indicates the difference in voltage.

For an alternate method, the transformer to be tested is excited in parallel with a transformer of known ratio, and the voltmeters are arranged to measure the two secondary voltages (see Figure 10). The voltmeters shall be interchanged and the test repeated. The averages of the results are the correct voltages.

Copyright © 1999 IEEE. All rights reserved.
Copyright The Institute of Electrical and Electronics Engineers, Inc.
Provided by IHS under license with IEEE
No reproduction or networking permitted without license from IHS
Not for Resale

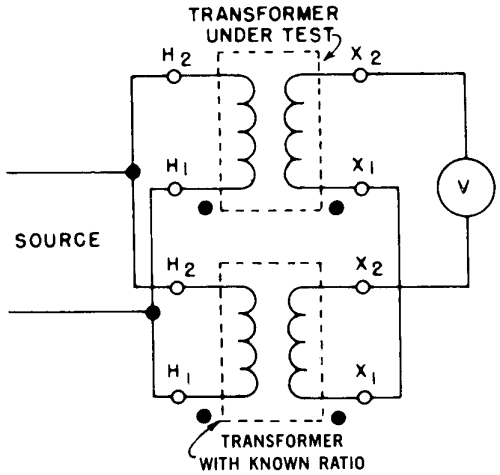

Figure 9—Voltmeter arranged to read the difference between the two secondary voltages

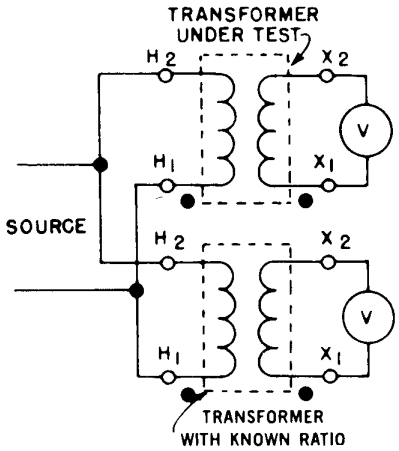

NOTE–Readings are repeated after interchanging voltmeters.

Figure 10—Voltmeters arranged to read the two secondary voltages

7.3.3 Ratio bridge

A bridge using the basic circuit of Figure 11 may be used to measure ratio.

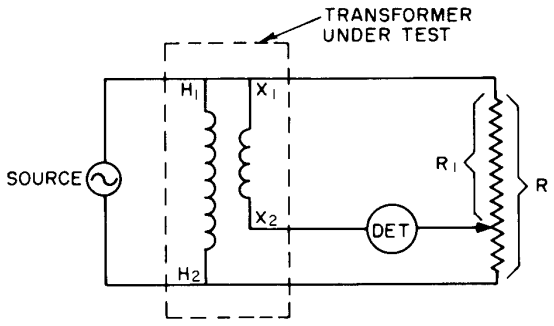

Figure 11—Basic circuit of ratio bridge

Copyright © 1999 IEEE. All rights reserved.

Copyright The Institute of Electrical and Electronics Engineers, Inc.
Provided by IHS under license with IEEE
No reproduction or networking permitted without license from IHS
Not for Resale

When detector DET is in balance, the transformer ratio is equal to R/R_1.

NOTE 1—Measurement of ratio using circuits of this type has in the past also been described as ratio by resistance potentiometer.

NOTE 2—More accurate results can be obtained using a ratio bridge that provides phase-angle correction.

NOTE 3—The ratio bridge can also be used to test polarity, phase relation, and phase sequence.

8. No-load losses and excitation current

8.1 General

No-load (excitation) losses are losses that are incident to the excitation of the transformer. No-load losses include core loss, dielectric loss, conductor loss in the winding due to excitation current, and conductor loss due to circulating current in parallel windings. These losses change with the excitation voltage.

Excitation current (no-load current) is the current that flows in any winding used to excite the transformer when all other windings are open-circuited. It is generally expressed in percent of the rated current of the winding in which it is measured.

The no-load losses consist primarily of the core loss in the transformer core, which is a function of the magnitude, frequency, and waveform of the impressed voltage. No-load losses also vary with temperature and are particularly sensitive to differences in waveform; therefore, no-load loss measurements will vary markedly with the waveform of the test voltage.

In addition, several other factors affect the no-load losses and current of a transformer. The design-related factors include the type and thickness of core steel, the core configuration, the geometry of core joints, and the core flux density.

Factors that cause differences in the no-load losses of transformers of the same design include variability in characteristics of the core steel, mechanical stresses induced in manufacturing, variation in gap structure, and core joints.

8.2 No-load loss test

The purpose of the no-load loss test is to measure no-load losses at a specified excitation voltage and a specified frequency. The no-load loss determination shall be based on a sine-wave voltage, unless a different waveform is inherent in the operation of the transformer. The average-voltage voltmeter method is the most accurate method for correcting the measured no-load losses to a sine-wave basis and is recommended. This method employs two parallel-connected voltmeters; one is an average-responding [but root mean square (rms) calibrated] voltmeter; the other is a true rms-responding voltmeter. The test voltage is adjusted to the specified value as read by the average-responding voltmeter. The readings of both voltmeters are employed to correct the no-load losses to a sine-wave basis, using Equation (2) in accordance with 8.3.

8.2.1 Connection diagrams

Tests for the no-load loss determination of a single-phase transformer are carried out using the schemes depicted in Figure 12 and Figure 13. Figure 12 shows the necessary equipment and connections when instrument transformers are not required. When instrument transformers are required, which is the general case, the equipment and connections shown in Figure 13 apply. If necessary, correction for losses in connected measurement instruments may be made by disconnecting the transformer under test and noting the

Copyright © 1999 IEEE. All rights reserved.
Copyright The Institute of Electrical and Electronics Engineers, Inc.
Provided by IHS under license with IEEE
No reproduction or networking permitted without license from IHS
Not for Resale

wattmeter reading at the specified test circuit voltage. These losses represent the losses of the connected instruments (and voltage transformer, if used). They may be subtracted from the earlier wattmeter reading to obtain the no-load loss of the transformer under test.

Tests for the no-load loss determination of a three-phase transformer shall be carried out by using the three wattmeter method. Figure 14 is a schematic representation of the equipment and connections necessary for conducting no-load loss measurements of a three-phase transformer when instrument transformers are necessary.

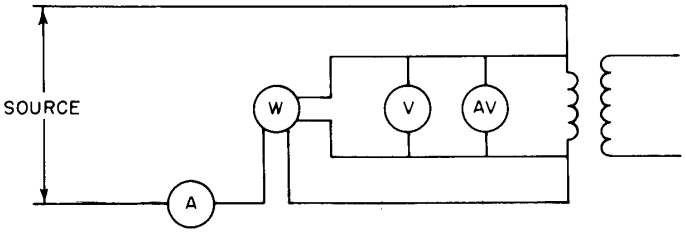

Figure 12—Connections for no-load loss test of a single-phase transformer without instrument transformers

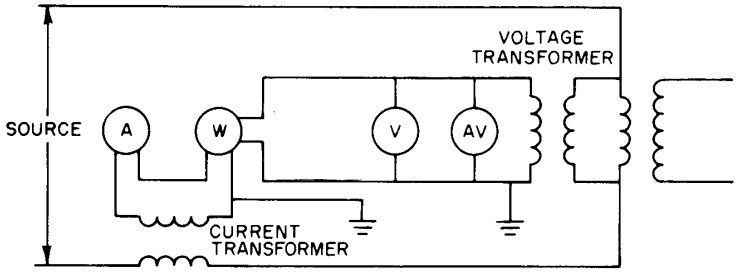

Figure 13—Connections for no-load loss test of a single-phase transformer with instrument transformers

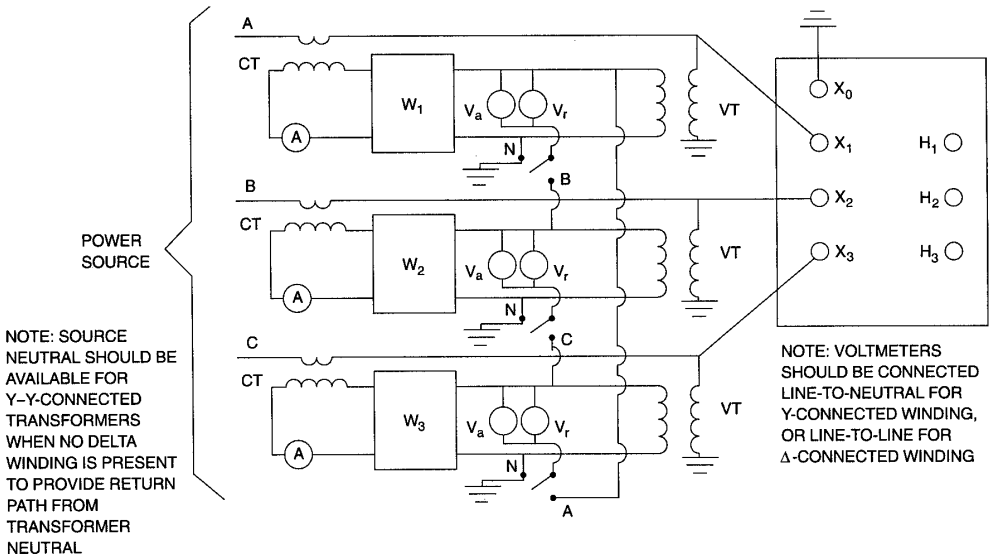

Figure 14—Three-phase transformer connections for no-load loss and excitation current tests using three-wattmeter method

Copyright © 1999 IEEE. All rights reserved.

Copyright The Institute of Electrical and Electronics Engineers, Inc.
Provided by IHS under license with IEEE
No reproduction or networking permitted without license from IHS
Not for Resale

8.2.2 Voltmeter connections

When correcting to a sine-wave basis using the average-voltage voltmeter method, attention shall be paid to the voltmeter connections because the line-to-line voltage waveform may differ from line-to-neutral voltage waveform. Therefore, depending upon whether the transformer windings energized during the test are connected delta or wye, the voltmeter connections shall be such that the waveform applied to the voltmeters is the same as the waveform across the energized windings.

8.2.3 Energized windings

Either the high- or the low-voltage winding of the transformer under test may be energized, but it is generally more convenient to make this test using the low-voltage winding. In any case, the full winding (not merely a portion of the winding) should be used whenever possible. If, for some unusual reason, only a portion of a winding is excited, this portion shall not be less than 25% of the winding.

8.2.4 Voltage and frequency

The operating and performance characteristics of a transformer are based upon rated voltage and rated frequency, unless otherwise specified. Therefore, the no-load loss test is conducted with rated voltage impressed across the transformer terminals, using a voltage source at a frequency equal to the rated frequency of the transformer under test, unless otherwise specified.

For the determination of the no-load losses of a single-phase transformer or a three-phase transformer, the frequency of the test source should be within ± 0.5% of the rated frequency of the transformer under test. The voltage shall be adjusted to the specified value as indicated by the average-voltage voltmeter. Simultaneous values of rms voltage, rms current, electrical power, and the average-voltage voltmeter readings shall be recorded. For a three-phase transformer the average of the three voltmeter readings shall be the desired nominal value.

8.3 Waveform correction of no-load losses

The eddy-current component of the no-load loss varies with the square of the rms value of excitation voltage and is substantially independent of the voltage waveform. When the test voltage is held at the specified value as read on the average-voltage voltmeter, the actual rms value of the test voltage may not be equal to the specified value. The no-load losses of the transformer corrected to a sine-wave basis shall be determined from the measured value by means of Equation (2):

$$P_c(T_m) = \frac{P_m}{P_1 + kP_2} \tag{2}$$

where

T_m is the average oil temperature at the time of test (°C),
$P_c(T_m)$ is the no-load losses, corrected for waveform, at temperature T_m,
P_m is measured no-load losses at temperature T_m,
P_1 is per unit hysteresis loss,
P_2 is per unit eddy-current loss,
k is $\left(\frac{E_r}{E_a}\right)^2$,
E_r is the test voltage measured by rms voltmeter,
E_a is the test voltage measured by average-voltage voltmeter.

Copyright © 1999 IEEE. All rights reserved.
Copyright The Institute of Electrical and Electronics Engineers, Inc.
Provided by IHS under license with IEEE
No reproduction or networking permitted without license from IHS
Not for Resale

The actual per unit values of hysteresis and eddy-current losses should be used if available. If actual values are not available, it is suggested that the two loss components be assumed equal in value, assigning each a value of 0.5 per unit.

Equation (2) is valid only for test voltages with moderate waveform distortion. If waveform distortion in the test voltage causes the magnitude of the correction to be greater than 5%, then the test voltage waveform shall be improved for an adequate determination of the no-load losses and currents.

8.4 Temperature correction of no-load losses

A reference temperature is required when stating no-load losses because the no-load losses vary with core temperature. The standard reference temperature T_r for transformer no-load losses is specified in 5.9 of IEEE Std C57.12.00-1993.

The observed decrease in no-load losses for an increase in temperature results from several mechanisms acting together. Changes in the core steel resistivity, changes in mechanical stress in the core structure, and variations in the temperature gradients in the core cause the no-load loss to change with temperature. Because these factors vary from design to design and also between transformers of the same design, it is not practical to specify an exact formula to account for temperature variation throughout the operating temperature range of transformers.

However, ordinary variations of temperature encountered when performing the no-load loss test will not affect no-load losses materially, and no correction for temperature need be made, so long as the following conditions are met:

a) The average oil temperature is within ±10 °C of the reference temperature T_r .
b) The difference between the top and bottom oil temperatures does not exceed 5 °C.

If conducting the test with temperatures outside the specified ranges is necessary, the empirical formula in Equation (3) may be used to correct the measured no-load losses to the reference temperature:

$$P_c(T_r) = P_c(T_m)\{1 + (T_m - T_r)K_T\} \quad (3)$$

where

$P_c(T_r)$ is the no-load losses, corrected to the standard reference temperature T_r ,
$P_c(T_m)$ is the no-load losses, corrected for waveform, at temperature T_m ,
T_r is the standard reference temperature (°C),
K_T is an empirically derived per-unit change in no-load loss per °C.

If the actual value of K_T is not available, a value of 0.000 65 per unit change per °C should be used. This value is typical for cores constructed of grain-oriented silicon steel and is satisfactory as a correction for no-load losses when the transformer shall be tested outside the specified temperature range.

8.5 Determination of excitation (no-load) current

The excitation (no-load) current of a transformer is the current that maintains the rated magnetic flux excitation in the core of the transformer. The excitation current is usually expressed in per unit or in percent of the rated line current of the winding in which it is measured. (Where the cooling class of the transformer involves more than one kVA rating, the lowest kVA rating is used to determine the base current.) Measurement of excitation current is usually carried out in conjunction with the tests for no-load losses. Rms current

Copyright © 1999 IEEE. All rights reserved.

Copyright The Institute of Electrical and Electronics Engineers, Inc.
Provided by IHS under license with IEEE
No reproduction or networking permitted without license from IHS
Not for Resale

is recorded simultaneously during the test for no-load losses using the average-voltage voltmeter method. This value is used in calculating the per unit or percent excitation current. For a three-phase transformer, the excitation current is calculated by taking the average of the magnitudes of the three line currents.

9. Load losses and impedance voltage

9.1 General

The load losses of a transformer are losses incident to a specified load carried by the transformer. Load losses include I^2R loss in the windings due to load current and stray losses due to eddy currents induced by leakage flux in the windings, core clamps, magnetic shields, tank walls, and other conducting parts. Stray losses may also be caused by circulating currents in parallel windings or strands. Load losses are measured by applying a short circuit across either the high-voltage winding or the low-voltage winding and applying sufficient voltage across the other winding to cause a specified current to flow in the windings. The power loss within the transformer under these conditions equals the load losses of the transformer at the temperature of test for the specified load current.

The impedance voltage of a transformer is the voltage required to circulate rated current through one of two specified windings when the other winding is short-circuited, with the windings connected as for rated voltage operation. Impedance voltage is usually expressed in per unit or in percent of the rated voltage of the winding across which the voltage is applied and measured. The impedance voltage comprises a resistive component and a reactive component. The resistive component of the impedance voltage, called the resistance drop, is in phase with the current and corresponds to the load losses. The reactive component of the impedance voltage, called the reactance drop, is in quadrature with the current and corresponds to the leakage-flux linkages of the windings. The impedance voltage is the phasor sum of the two components. The impedance voltage is measured during the load loss test by measuring the voltage required to circulate rated current in the windings. The measured voltage is the impedance voltage at the temperature of test, and the power loss dissipated within the transformer is equal to the load losses at the temperature of test and at rated load. The impedance voltage and the load losses are corrected to a reference temperature using the formulas specified in this standard.

The impedance kVA is the product of the impedance voltage across the energized winding in kilovolts times the winding current in amperes. The ratio of the load losses in kilowatts at the temperature of test to the impedance kVA at the temperature of test is the load loss power factor of the transformer during the test and is used in correction for phase-angle error as specified in this standard.

9.2 Factors affecting the values of load losses and impedance voltage

The magnitudes of the load losses and the impedance voltage will vary depending on the positions of tap changers, if any, in various windings. These changes are due to the changes in the magnitudes of load currents and associated leakage-flux linkages, as well as changes in stray flux and accompanying stray losses. In addition, several other factors affect the values of load losses and impedance voltage of a transformer. Considerations of these factors, in part, explain variations in values of load losses and impedance voltage for the same transformer under different test conditions, as well as variations between the values of load losses and impedance voltage of different transformers of the same design. These factors are discussed in 9.2.1 through 9.2.4.

9.2.1 Design

The design-related factors include conductor material, conductor dimensions, winding design, winding arrangement, shielding design, and selection of structural materials.

Copyright © 1999 IEEE. All rights reserved.
Copyright The Institute of Electrical and Electronics Engineers, Inc.
Provided by IHS under license with IEEE
No reproduction or networking permitted without license from IHS
Not for Resale

9.2.2 Process

The process-related factors that impact the values of load losses and impedance voltage are the dimensional tolerances of conductor materials, the final dimensions of completed windings, phase assemblies, metallic parts exposed to stray flux, and variations in properties of conductor material and other metallic parts.

9.2.3 Temperature

Load losses are also a function of temperature. The I^2R component of the load losses increases with temperature, while the stray loss component decreases with temperature. Procedures for correcting the load losses and impedance voltage to the standard reference temperature are described in 9.4.2.

9.2.4 Measurements

At low power factors, such as those encountered while measuring the load losses and impedance voltage of power transformers, judicious selection of measurement method and test system components is essential for accurate and repeatable test results. The phase-angle errors in the instrument transformers, measuring instruments, bridge networks, and accessories affect the load loss test results. Procedures for correcting the load losses for metering phase-angle errors are described in 9.4.1.

9.3 Tests for measuring load losses and impedance voltage

Regardless of the test method selected, the following preparatory requirements shall be satisfied for accurate test results:

a) To determine the temperature of the windings with sufficient accuracy, the following conditions shall be met, except as stated in the note below:
   1) The temperature of the insulating liquid has stabilized, and the difference between top and bottom oil temperatures does not exceed 5 °C.
   2) The temperature of the windings shall be taken immediately before and after the load losses and impedance voltage test in a manner similar to that described in 5.1. The average shall be taken as the true temperature.
   3) The difference in winding temperature before and after the test shall not exceed 5 °C.

NOTE—For distribution and pad-mounted transformers up to 2500 kVA, where it may not be practical to wait for thermal equilibrium, the method used to determine the winding temperature shall take into consideration the lack of thermal equilibrium and the effect of ohmic heating of the winding conductors by load current during the test. The method used can be verified by staging a repeated measurement of the load losses and impedance voltage at a later time when conditions 1), 2), and 3) above are met.

b) The conductors used to short-circuit the low-voltage high-current winding of a transformer shall have a cross-sectional area equal to or greater than the corresponding transformer leads.

c) The frequency of the test source used for measuring load losses and impedance voltage shall be within ± 0.5% of the nominal value.

d) The maximum value of correction to the measured load losses due to the test system phase-angle error is limited to ± 5% of measured losses. If more than 5% correction is required, test methods and/or test apparatus should be improved for an adequate determination of load losses.

9.3.1 Wattmeter-voltmeter-ammeter method

The connections and apparatus needed for the determination of the load losses and impedance voltage of a single-phase transformer are shown in Figure 15 and Figure 16. Figure 15 applies when instrument transformers are not required. If instrument transformers are required, which is the general case, then Figure 16 applies.

Copyright © 1999 IEEE. All rights reserved.

Copyright The Institute of Electrical and Electronics Engineers, Inc.
Provided by IHS under license with IEEE
No reproduction or networking permitted without license from IHS
Not for Resale

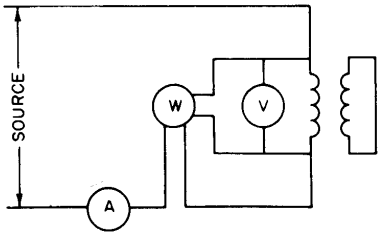

NOTE–Instrument transformers to be added when necessary.

Figure 15—Single-phase transformer connections for load loss and impedance voltage tests without instrument transformers

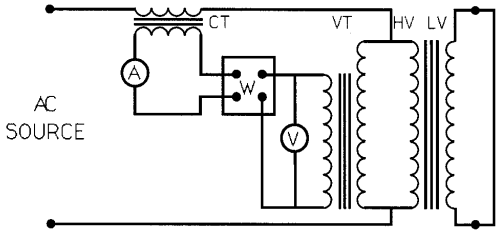

Figure 16—Single-phase transformer connections for load loss and impedance voltage tests with instrument transformers

For three-phase transformers, three-phase power measurement utilizing two wattmeters is possible, but can result in very large errors at low power factors encountered in load loss tests of transformers. The two-wattmeter method should not be used for loss tests on three-phase transformers.

For three-phase transformers, Figure 17 shows the apparatus and connections using the three-wattmeter method.

The selection of test method and test system components should be such that the accuracy requirements as specified in 9.4 of IEEE Std C57.12.00-1993 are satisfied.

9.3.2 Impedance bridge methods

Impedance bridge methods may be used as an alternate to the wattmeter-voltmeter-ammeter method for measurement of load losses and impedance voltage.

While many configurations of impedance bridge networks are possible, the choice of a particular network is determined by considerations of the measurement environment and available test facility. The general form of the impedance bridge as shown in Figure 18 is an electrical network arranged so that a voltage proportional to the current through the transformer under test is compared with a reference voltage that is a function of the applied voltage E_T. The voltage comparison is made by adjusting one or more of the bridge arms (Z_1, Z_2, and Z_3) until the voltage across Z_2 and Z_3 are exactly equal in magnitude and phase. Voltage balance is indicated by a null reading of the detector DET. The impedance characteristics of the transformer under test can then be calculated from the values of Z_1, Z_2, and Z_3.

Copyright © 1999 IEEE. All rights reserved.
Copyright The Institute of Electrical and Electronics Engineers, Inc.
Provided by IHS under license with IEEE
No reproduction or networking permitted without license from IHS
Not for Resale

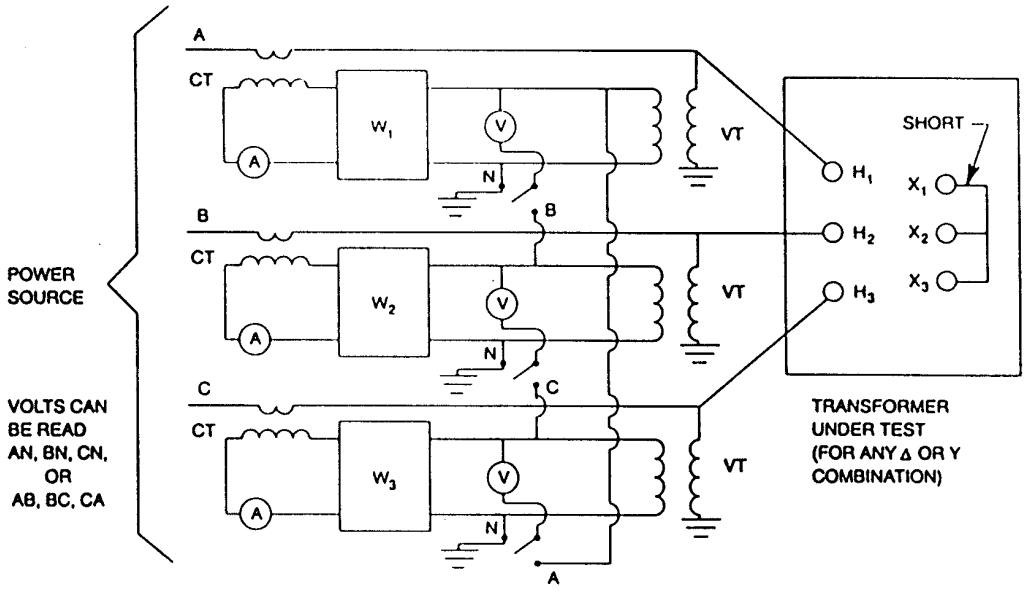

Figure 17—Three-phase transformer connections for load loss and impedance voltage tests using three-wattmeter method

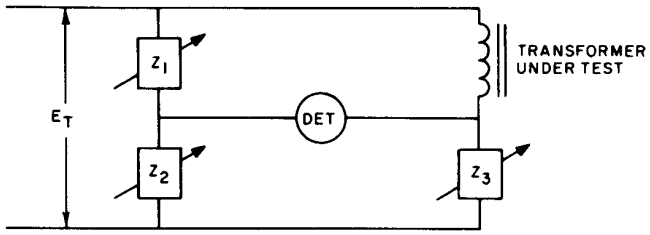

Figure 18—General impedance bridge network

Two of the most commonly used bridge networks for transformer testing are shown in Figure 19 and Figure 20. In Figure 19, a bridge technique is illustrated that employs a precision, low-loss high-voltage capacitor and precision current transformer. It has some similarities to the classical Schering and Maxwell bridges. In Figure 20, another bridge technique employing an HV capacitor, precision current transformer, and transformer ratio arm bridge is shown.

In general, the bridge network adjustments for voltage balance are frequency-dependent; therefore, excitation of the bridge shall be made with a power source that has low harmonic distortion and excellent frequency stability.

The factors that impact overall accuracy of test results by the wattmeter-voltmeter-ammeter method also impact the accuracy of test results by impedance bridge methods.

Copyright © 1999 IEEE. All rights reserved.

Copyright The Institute of Electrical and Electronics Engineers, Inc.
Provided by IHS under license with IEEE
No reproduction or networking permitted without license from IHS
Not for Resale

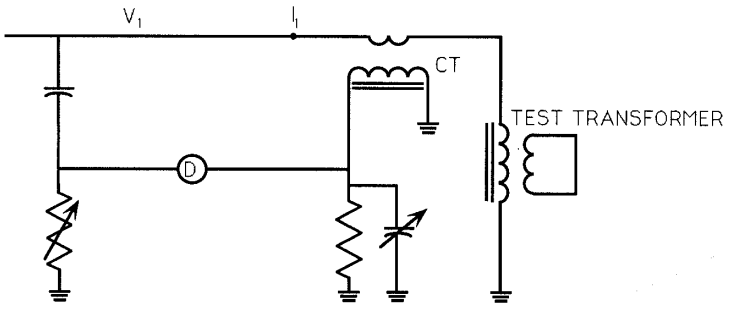

Figure 19—RC-type impedance bridge

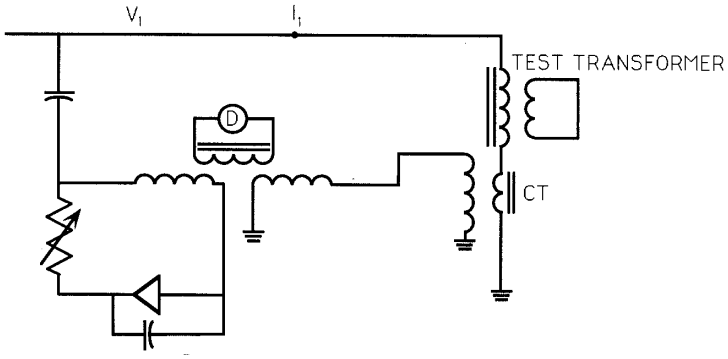

Figure 20—Transformer-ratio-arm bridge

Loss measurements on three-phase transformers using a three-phase source are made by connecting the bridge network to each phase in turn and calculating the total losses from the three single-phase measurements. This is analogous to the three-wattmeter method of measuring losses by switching a single wattmeter from phase to phase. To verify that switching the bridge from phase to phase does not affect the result on the remaining phases, and to demonstrate that the time involved in switching the bridge does not result in undue heating of the transformer windings during the test, the losses can be monitored for stable readings by wattmeters in all phases.

9.3.3 Transformer test procedures

9.3.3.1 Two-winding transformers and autotransformers

Load loss and impedance voltage tests are carried out using the connections and apparatus shown in Figure 16 for single-phase transformers and Figure 17 for three-phase transformers.

With one winding short-circuited, a voltage of sufficient magnitude at rated frequency is applied to the other winding and adjusted to circulate rated current in the excited winding. Simultaneous readings of wattmeter, voltmeter, and ammeter are taken. If necessary, the corrections for the losses in external connections and connected measuring instruments should be made.

The procedure for testing three-phase transformers is very similar, except that all connections and measurements are three-phase instead of single-phase, and a balanced three-phase source of power is used for the tests. If the three line currents cannot be balanced, their average rms value should correspond to the desired value. Simultaneous readings of wattmeters, voltmeters, and ammeter should be recorded.

Copyright © 1999 IEEE. All rights reserved.
Copyright The Institute of Electrical and Electronics Engineers, Inc.
Provided by IHS under license with IEEE
No reproduction or networking permitted without license from IHS
Not for Resale

Single-phase and three-phase autotransformers may be tested with internal connections unchanged. The test is made using the autotransformer connection. The input (or output) terminals are shorted, and voltage (at rated frequency) is applied to the other terminals. The voltage is adjusted to cause rated line current to flow in the test circuit as shown in Figure 21. Simultaneous readings of wattmeters, voltmeters, and ammeter are recorded for determinations of load losses and impedance voltage.

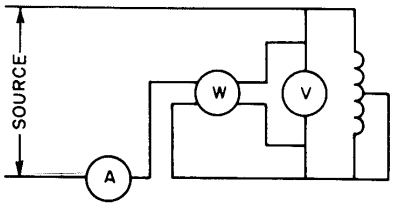

Figure 21—Connections for impedance loss and impedance voltage tests of an autotransformer

For the purpose of measuring load losses and impedance voltage, the series and common windings of autotransformers may be treated as separate windings, one short-circuited and the other excited. When the transformer is connected in the two-winding connection for the test, the current held shall be the rated current of the excited winding, which may or may not be the same as rated line current. The load loss watts and applied voltamperes will be the same, whether series and common windings are treated as separate windings in the two-winding connection or are connected in the autotransformer connection, so long as rated winding current is held in the first case and rated line current in the second case.

9.3.3.2 Three-winding transformer

For a three-winding transformer, which may be either single-phase or three-phase, three sets of impedance measurements are made between pairs of windings, following the same procedure as for two-winding transformers. Measurements of the impedances Z_{12}, Z_{23}, and Z_{31} are obtained between windings 1, 2, and 3.

If the kVA capacities of the different windings are not alike, the current held for the impedance test should correspond to the capacity of the lower-rated winding of the pair of windings under test. However, all of these data, when converted into percentage form, should be based on the same output kVA, preferably that of the primary winding. An equivalent three-winding impedance network, as shown in Figure 22, can be derived from Equation (4), Equation (5), and Equation (6):

$$Z_1 = \frac{Z_{12} - Z_{23} + Z_{31}}{2} \tag{4}$$

$$Z_2 = \frac{Z_{23} - Z_{31} + Z_{12}}{2} = Z_{12} - Z_1 \tag{5}$$

$$Z_3 = \frac{Z_{31} - Z_{12} + Z_{23}}{2} = Z_{31} - Z_1 \tag{6}$$

where

Z_{12}, Z_{23}, and Z_{31} are the measured impedance values between pairs of windings, as indicated, all expressed on the same kVA base.

These equations involve complex numbers, but they may be used for the resistance (in-phase) component or the reactance (quadrature) component of the impedance voltage or of the impedance voltamperes.

Copyright © 1999 IEEE. All rights reserved.

Copyright The Institute of Electrical and Electronics Engineers, Inc.
Provided by IHS under license with IEEE
No reproduction or networking permitted without license from IHS
Not for Resale

The treatment of the individual load losses and impedance voltages for temperature corrections, etc., is the same as for two-winding single-phase transformers.

The total load losses of a three-winding transformer is the sum of the losses in the branches of the equivalent circuit of Figure 22 for any specific terminal load conditions.

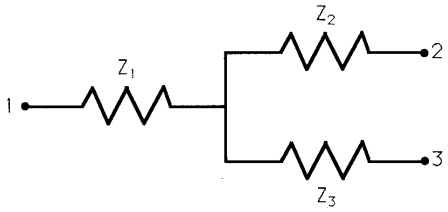

Figure 22—Equivalent three-winding impedance network

9.3.3.3 Interlacing impedance voltage of a Scott-connected transformer

The interlacing impedance voltage of Scott-connected transformers is the single-phase voltage applied from the midtap of the main transformer winding to both ends, connected together. The voltage is sufficient to circulate, in the supply lines, a current equal to the rated three-phase line current. The current in each half of the winding is 50% of this value.

The percent interlacing impedance is the measured voltage expressed as a percent of the teaser voltage. The percent resistance is the measured losses expressed as a percentage of the rated kVA of the teaser winding.

9.3.3.4 Test of three-phase transformer with single-phase voltage

To determine the load losses and impedance voltage of a three-phase transformer with single-phase voltage, the setup as schematically shown in Figure 23 is recommended.

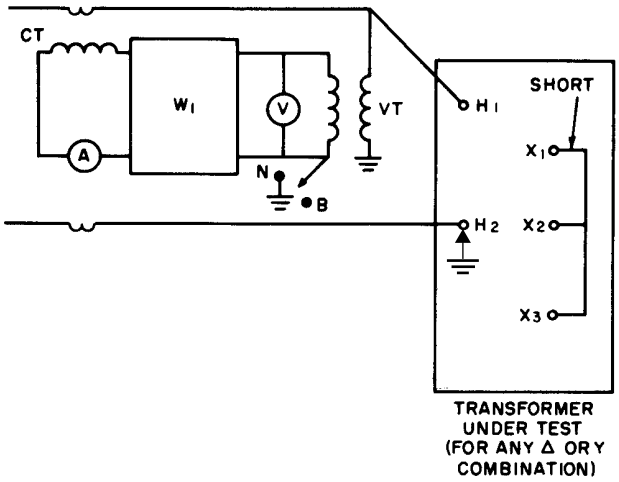

Figure 23—Test of three-phase transformer with single-phase voltage

The three line leads of one winding are short-circuited, and single-phase voltage at rated frequency is applied to two terminals of the other winding. The applied voltage is adjusted to circulate rated line current.

Three successive readings are taken on the three pairs of leads; for example, H_1 and H_2, H_2 and H_3, H_3 and H_1. Then,

Copyright © 1999 IEEE. All rights reserved.
Copyright The Institute of Electrical and Electronics Engineers, Inc.
Provided by IHS under license with IEEE
No reproduction or networking permitted without license from IHS
Not for Resale

$$\text{Measured load losses (W)} = 1.5\left(\frac{P_{12} + P_{23} + P_{31}}{3}\right) \tag{7}$$

$$\text{Measured impedance voltage} = 0.866\left(\frac{E_{12} + E_{23} + E_{31}}{3}\right) \tag{8}$$

where

P is individual reading of measured load losses as indicated by subscripts,
E is individual reading of measured impedance voltage as indicated by subscripts.

The stray loss component shall be obtained by subtracting the I^2R losses from the measured load losses of the transformer. Let R_1 be the resistance measured between two high-voltage terminals and R_2 the resistance between two low-voltage terminals; let I_1 and I_2 be the respective rated line currents. Then, the total I^2R loss of all three phases will be

$$\text{Total } I^2R \text{ (watts)} = 1.5(I_1^2R_1 + I_2^2R_2) \tag{9}$$

This formula applies equally well to wye- or delta-connected windings.

Temperature correction shall be made as in 9.4.2.

9.4 Calculation of load losses and impedance voltage from test data

Load losses and impedance voltage measurements vary with temperature and, in general, shall be corrected to a reference temperature. In addition, load loss measurement values shall be corrected for metering phase-angle error.

9.4.1 Correction of load loss measurement due to metering phase-angle errors

In addition to consideration of magnitude-related errors such as instrument transformer ratio errors and meter calibration, correction of load loss measurement due to phase-angle errors in the wattmeters, voltage-measuring circuit, and current-measuring circuit shall be applied in accordance with Table 1 using the correction formula in Equation (10).

$$P_c = P_m - V_m A_m(-W_d - V_d + C_d) \tag{10}$$

where

P_c is the wattmeter reading, corrected for phase-angle error (W),
P_m is the actual wattmeter reading (W),
V_m is the voltmeter reading across wattmeter voltage element (V),
A_m is the ammeter reading in wattmeter current element (A),
W_d is the phase-angle error of wattmeter where applicable (rad),
V_d is the phase-angle error of voltage transformer (rad),
C_d is the phase-angle error of current transformer (rad).

In general, instrument transformer phase-angle errors are a function of burden and excitation. Likewise, wattmeter phase-angle errors are a function of the scale being used and the circuit power factor. Thus, the instrumentation phase-angle errors used in the correction formula shall be specific for the test conditions

Copyright © 1999 IEEE. All rights reserved.

Copyright The Institute of Electrical and Electronics Engineers, Inc.
Provided by IHS under license with IEEE
No reproduction or networking permitted without license from IHS
Not for Resale

Table 1—Requirements for phase-angle error correction

Apparent load loss power factor (PF = P_m/VA)	Comments
PF ≤ 0.03	Apply phase-angle error correction
0.03 < PF ≤ 0.10	Apply phase-angle error correction if $\lvert - W_d - V_d + C_d \rvert > 290$ μrad (1 min)
PF > 0.10	Apply phase-angle error correction if $\lvert - W_d - V_d + C_d \rvert > 870$ μrad (3 min)

involved. Only instrument transformers meeting 0.3 metering accuracy class, or better, are acceptable for measurements.

Use of Equation (10) is limited to conditions of apparent power factor less than 0.20 and the total system phase-angle error less than 20 min. If corrections are required with apparent power factor or system phase error outside this range, the following exact formulas apply:

$$\phi_a = \cos^{-1}\left(\frac{P_m}{V_m A_m}\right) \tag{11}$$

$$P_c = V_m A_m \cos(\phi_a - W_d - V_d + C_d) \tag{12}$$

For three-phase measurements, the corrections are applied to the reading of each wattmeter employed. The transformer load loss at temperature T_m is then calculated as follows:

$$P(T_m) = \sum_{i=1}^{3} R_v R_a P_{ci} \tag{13}$$

where

$P(T_m)$ is transformer load losses, corrected for phase-angle error at temperature T_m,
P_{ci} is the corrected wattmeter reading of the ith wattmeter,
R_v is the true voltage ratio of voltage measuring circuit,
R_a is the true current ratio of current measuring circuit.

9.4.2 Temperature correction of load losses

Both I^2R losses and stray losses of a transformer vary with temperature. The I^2R losses, $P_r(T_m)$, of a transformer are calculated from the ohmic resistance measurements (corrected to the temperature T_m at which the measurement of load losses and impedance voltage was done) and the current that were used in the impedance measurement. These I^2R losses subtracted from the measured load loss watts, $P(T_m)$, give the stray losses, $P_s(T_m)$, of the transformer at the temperature at which the load loss test was made.

$$P_s(T_m) = P(T_m) - P_r(T_m) \tag{14}$$

where

$P_s(T_m)$ is the calculated stray losses (W) at temperature T_m,
$P(T_m)$ is the transformer load losses (W), corrected in accordance with 9.4.1, for phase-angle error at temperature T_m,

Copyright © 1999 IEEE. All rights reserved.
Copyright The Institute of Electrical and Electronics Engineers, Inc.
Provided by IHS under license with IEEE
No reproduction or networking permitted without license from IHS
Not for Resale

$P_r(T_m)$ is the calculated I^2R loss (W) at temperature T_m.

The I^2R component of load losses increases with temperature. The stray loss component diminishes with temperature. Therefore, when it is desirable to convert the load losses from the temperature at which it is measured T_m to another temperature T, the two components of the load losses are corrected separately.

Thus,

$$P_r(T) = P_r(T_m)\left(\frac{T_k + T}{T_k + T_m}\right) \quad (15)$$

$$P_s(T) = P_s(T_m)\left(\frac{T_k + T_m}{T_k + T}\right) \quad (16)$$

then

$$P(T) = P_r(T) + P_s(T) \quad (17)$$

where

$P_r(T)$ is I^2R loss (W) at temperature T (°C),
$P_s(T)$ is stray losses (W) at temperature T (°C),
$P(T)$ is transformer load losses (W) corrected to temperature T (°C),
T_k is 234.5 °C (copper) or 225 °C (aluminum) (see note below).

NOTE—The temperature 225 °C applies for pure EC aluminum. T_k may be as high as 230 °C for alloyed aluminum. Where copper and aluminum windings are employed in the same transformer, a value for T_k of 229 °C should be applied for the correction of stray losses.

9.4.3 Impedance voltage

Impedance voltage and its resistive and reactive components are determined by the use of Equation (18), Equation (19), Equation (20), and Equation (21).

$$E_r(T_m) = \frac{P(T_m)}{I} \quad (18)$$

$$E_x = \sqrt{E_z(T_m)^2 - E_r(T_m)^2} \quad (19)$$

$$E_r(T) = \frac{P(T)}{I} \quad (20)$$

$$E_z(T) = \sqrt{E_r(T)^2 + E_x^2} \quad (21)$$

where

$E_r(T_m)$ is the resistance voltage drop (v) of in-phase component at temperature T_m,
$E_r(T)$ is the resistance voltage drop (v) of in-phase component corrected to temperature T,
E_x is the reactance voltage drop (v) of quadrature component,
$E_z(T_m)$ is the impedance voltage (v) at temperature T_m,
$E_z(T)$ is the impedance voltage (v) at temperature T,
$P(T)$ is the transformer load losses (W) corrected to temperature T,

Copyright © 1999 IEEE. All rights reserved.

Copyright The Institute of Electrical and Electronics Engineers, Inc.
Provided by IHS under license with IEEE
No reproduction or networking permitted without license from IHS
Not for Resale

$P(T_m)$ is transformer load losses (W) measured at temperature T_m,
I is the current (A) in excited winding.

Per-unit values of the resistance, reactance, and impedance voltage are obtained by dividing $E_r(T)$, E_x, and $E_z(T)$ by the rated voltage. Percentage values are obtained by multiplying per-unit values by 100.

9.5 Zero-phase-sequence impedance

9.5.1 Zero-phase-sequence impedance tests of three-phase transformers

The zero-phase-sequence impedance characteristics of three-phase transformers depend upon the winding connections and, in some cases, upon the core construction. Zero-phase-sequence impedance tests described in this standard apply only to transformers having one or more windings with a physical neutral brought out for external connection. In all tests, one such winding shall be excited at rated frequency between the neutral and the three line terminals connected together. External connection of other windings shall be as described in 9.5 for various transformer connections. Transformers with connections other than as described in 9.5 shall be tested as determined by the individuals responsible for design and application.

The excitation voltage and current shall be established as follows:

— If no delta connection is present on the transformer, the applied voltage should not exceed 30% of the rated line-to-neutral voltage of the winding being energized, nor should the phase current exceed its rated value.
— If a delta connection is present, the applied voltage should be such that the rated phase current of any delta winding is not exceeded. The percent excitation voltage at which the tests are made shall be shown on the test report. The time duration of the test shall be such that the thermal limits of any of the transformer parts are not exceeded.

Single-phase measurements of excitation voltage, total current, and power shall be similar to those described in 9.3. The zero-phase-sequence impedance in percent on kVA base of excited winding for the test connection is as follows:

$$Z_0(\%) = 300\left(\frac{E}{E_r} \times \frac{I_r}{I}\right) \tag{22}$$

where

E is measured excitation voltage,
E_r is rated phase-to-neutral voltage of excited winding,
I is measured total input current flowing in the three parallel-connected phases,
I_r is rated current per phase of the excited windings.

9.5.2 Transformers with one neutral externally available, excluding transformers with interconnected windings

The zero-phase sequence network giving the external characteristics for transformers of this type is shown in Figure 24. Winding 1 has the available neutral, while windings 2, 3, and so forth do not.

Copyright © 1999 IEEE. All rights reserved.
Copyright The Institute of Electrical and Electronics Engineers, Inc.
Provided by IHS under license with IEEE
No reproduction or networking permitted without license from IHS
Not for Resale

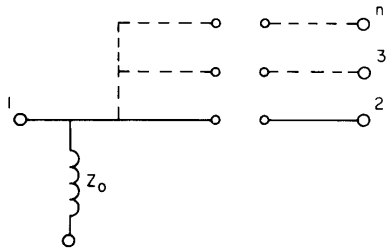

Figure 24—Equivalent zero-phase-sequence network for transformers with one externally available neutral

A zero-sequence test shall be made on the winding with the available neutral. A single-phase voltage shall be applied between the three shorted line terminals and neutral. The external terminals of all other windings may be open-circuited or shorted and grounded.

The term "interconnected windings" shall be interpreted to mean windings in which one or more electrical phases are linked by more than one magnetic phase.

9.5.3 Transformers with two neutrals externally available, excluding transformers with interconnected windings

The zero-phase sequence network giving the external characteristics for transformers of this type is shown in Figure 25. Windings 1 and 2 have the externally available neutrals while windings 3, 4, and so forth do not. The diagram is drawn for the case of 0° phase shift between windings 1 and 2.

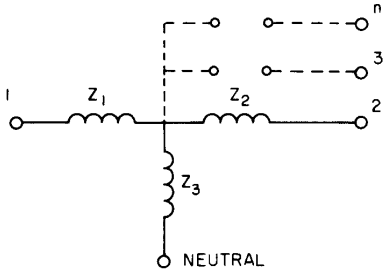

NOTE—Applies also to autotransformers.

Figure 25—Equivalent zero-phase-sequence network for transformers with two externally available neutrals and 0° phase shift between windings 1 and 2

Four tests may be made to determine the zero-phase-sequence equivalent network, one of which is redundant.

a) *Test 1*. Apply a single-phase voltage to winding 1 between the shorted line terminals of winding 1 and its neutral. All other windings are open-circuited. The measured zero-phase-sequence impedance is represented by Z_1N_o.

b) *Test 2*. Apply a single-phase voltage to winding 1 between the shorted line terminals of winding 1 and its neutral. Short the line terminals and neutral of winding 2. All other windings may be open-circuited or shorted. The measured zero-sequence impedance is represented by Z_1N_s.

Copyright © 1999 IEEE. All rights reserved.

Copyright The Institute of Electrical and Electronics Engineers, Inc.
Provided by IHS under license with IEEE
No reproduction or networking permitted without license from IHS
Not for Resale

c) *Test 3*. Apply a single-phase voltage to winding 2 between the shorted line terminals of winding 2 and its neutral. All other windings are open-circuited. The measured zero-phase-sequence impedance is represented by Z_2N_o.

d) *Test 4*. Apply a single-phase voltage to winding 2 between the shorted line terminals of winding 2 and its neutral. Short the line terminals and neutral of winding 1. All other windings may be open-circuited or shorted. The measured zero-phase-sequence impedance is represented by Z_2N_s.

Test 4 is redundant to Test 2 and need not be performed. If performed, however, it may be used as a check.

All measured zero-phase-sequence impedances should be expressed in percent and placed on a common kVA base. The constants in the equivalent circuit are as follows:

$$Z_3 = +\sqrt{Z_{2N_o}(Z_{1N_o} - Z_{1N_s})} = +\sqrt{Z_{1N_o}(Z_{2N_o} - Z_{2N_s})} \quad (23)$$

$$Z_2 = Z_{2N_o} - Z_3$$

$$Z_1 = Z_{1N_o} - Z_3$$

NOTE—These equations involve complex numbers. The plus sign before the radical in the first equation of Equation (23) is appropriate for most common cases in which windings 1 and 2 are physically adjacent in the design, and no delta winding (3, 4, etc.) is interleaved with them. A minus sign may be appropriate when a delta winding (3 or 4) is physically located within or between windings 1 and 2. The correctness of the sign can be checked by comparison with design calculations of zero-sequence impedance.

If Z_{1N_o} and Z_{2N_o} approach infinity, then Z_3 approaches infinity, and the equivalent circuit is that shown in Figure 26.

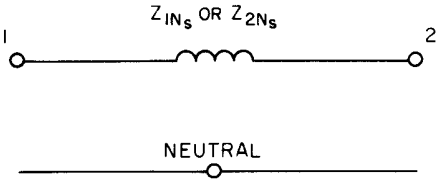

Figure 26—Equivalent zero-phase-sequence network for transformers with two externally available neutrals and 0° phase shift if Z_{1No} and Z_{2No} approach infinity

In the case of wye-wye connected transformers, the zero-sequence impedance, in general, is a nonlinear function of the applied voltage, which in turn may require more than one set of measurements to characterize the nonlinear behavior.

9.5.4 Autotransformers

The tests and equivalent circuits of 9.5.2 and 9.5.3 apply equally well for autotransformer connections, except that the externally available neutral of a common winding shall be considered as two externally available neutrals, one for the common winding and one for the series-common combination.

Copyright © 1999 IEEE. All rights reserved.
Copyright The Institute of Electrical and Electronics Engineers, Inc.
Provided by IHS under license with IEEE
No reproduction or networking permitted without license from IHS
Not for Resale

10. Dielectric tests

10.1 General

10.1.1 Factory dielectric tests

The purpose of dielectric tests in the factory is to demonstrate that the transformer has been designed and constructed to withstand the specified insulation levels.

10.1.2 Test requirements

Test levels and other test parameters shall be as outlined in IEEE Std C57.12.00-1993, or as otherwise specified.

10.1.3 Measurement of test voltages

Unless otherwise specified, the dielectric test voltages shall be measured or applied, or both, in accordance with IEEE Std 4-1995, with the following exceptions:

a) A protective resistance may be used in series with sphere gaps, on either the live or the grounded sphere. Where unnecessary to protect the spheres from arc damage, it may be omitted.
b) The bushing-type potential divider method shall be considered a standard method for transformer tests.
c) The rectified capacitor-current method shall be considered a standard method for transformer tests.
d) In conducting low-frequency tests for transformers of 100 kVA and less to be tested at 50 kV or less, it is permissible to depend on the ratio of the testing transformer to indicate the proper test voltage.

10.1.4 Type of power transformer

The terms Class I and Class II power transformers as used in this standard are defined in 5.10 of IEEE Std C57.12.00-1993.

10.1.5 Factory dielectric tests and conditions

10.1.5.1 Test sequence

Lightning impulse voltage tests, when required, shall precede the low-frequency tests. Switching impulse voltage tests, when required, shall also precede the low-frequency tests.

For Class II power transformers, the final dielectric test to be performed shall be the induced voltage test.

10.1.5.2 Temperature

Dielectric tests may be made at temperatures assumed under normal operation or at the temperatures attained under conditions of routine test.

10.1.5.3 Assembly

Transformers, including bushings and terminal compartments when necessary to verify air clearances, shall be assembled prior to making dielectric tests. However, assembly of items that do not affect dielectric tests, such as radiators and cabinets, is not necessary. Bushings shall, unless otherwise authorized by the purchaser, be those to be supplied with the transformer.

Copyright © 1999 IEEE. All rights reserved.

Copyright The Institute of Electrical and Electronics Engineers, Inc.
Provided by IHS under license with IEEE
No reproduction or networking permitted without license from IHS
Not for Resale

10.1.5.4 Transformers for connection to gas-insulated equipment

During dielectric testing of transformers for direct connection to gas-insulated substations, testing with the in-service bushings is preferred, but substitute air-oil bushings may be used unless otherwise specified by the user. Live part clearances and locations of the substitute bushings inside the transformer shall be identical, within normal manufacturing tolerances, to those of the in-service bushings. When the required internal clearances, or external air clearances, or both, cannot be achieved, suitable arrangements are required as determined by the manufacturer and user in advance of the design of the transformer.

10.1.6 Tests on bushings

When tests are required on outdoor apparatus (air-to-oil) bushings separately from the transformers, the tests shall be made in accordance with IEEE Std C57.19.00-1991 and IEEE Std C57.19.01-1991.

Details of separate testing of bushings for use on transformers connected to gas-insulated equipment shall be agreed upon by the manufacturer and user prior to the design of the transformer.

10.1.7 Dielectric tests in the field

Field dielectric tests may be warranted on the basis of detection of combustible gas or other circumstances. However, periodic dielectric tests are not recommended because of the severe stress imposed on the insulation.

Where field dielectric tests are required, low-frequency applied-voltage and induced-voltage tests shall be used. For distribution transformers and Class I power transformers, the line-to-ground or line-to-line voltage stress imposed shall not exceed 150% of normal operating stress or 85% of full test voltage, whichever is lower. The duration of the tests shall be the same as that specified in 10.6 and 10.7 for applied and induced voltage, respectively.

For Class II power transformers, the line-to-ground or line-to-line voltage stress imposed shall not exceed 150% of maximum system operating voltage. The duration of the test shall not exceed the limits given in Table 2.

Table 2—Maximum test duration

Test voltage as a percentage of maximum system operating voltages	Allowable duration (min)
150	5
140	12
130	36
120	120

When inducing a transformer in excess of its rated voltage, the test frequency should be increased as necessary to avoid core saturation. Guidance in this area is provided in 10.7.2.

10.2 Switching impulse test procedures

The switching impulse test, when specified, shall consist of applying or inducing a switching impulse wave between each high-voltage line terminal and ground with a crest value equal to the specified test level.

Copyright © 1999 IEEE. All rights reserved.
Copyright The Institute of Electrical and Electronics Engineers, Inc.
Provided by IHS under license with IEEE
No reproduction or networking permitted without license from IHS
Not for Resale

10.2.1 Number of tests

The test series shall consist of one reduced voltage transient at 50–70% of specified test level followed by two full voltage transients at the specified test level.

10.2.2 Switching impulse waves

10.2.2.1 Polarity

Either positive or negative polarity waves, or both, may be used.

10.2.2.2 Wave shape

The switching impulse voltage wave shall have a crest value in accordance with the assigned insulation level, subject to a tolerance of ± 3%, and shall exceed 90% of the crest value for at least 200 μs. The actual time to crest shall be greater than 100 μs, and the time to the first voltage zero on the tail of the wave shall be at least 1000 μs.

Occasionally, core saturation will cause the time to the first voltage zero to be less than 1000 μs. Successive transients of the same polarity may cause the time to the first voltage zero to become even shorter. To increase the time to the first voltage zero, it may be necessary to magnetically bias the core in the direction opposite to that caused by the switching impulse transient. This can be accomplished by passing a small direct current through the winding between impulses, by reversing the switching impulse polarity on successive applications, or by appliying reduced impulses of opposite polarity before each full switching impulse transient. If biasing cannot be accomplished so as to obtain 1000 μs to the first voltage zero, the shorter tail may be used since the duration of a switching impulse in actual service will similarly be reduced because of core saturation.

10.2.2.3 Time to crest

The actual time to crest shall be defined as the time interval from the start of the transient to the time when the maximum amplitude is reached.

10.2.2.4 Time to first voltage zero

The time to the first voltage zero on the tail of the wave shall be defined as the time interval from the start of the transient to the time when the first voltage zero occurs on the tail of the wave.

10.2.2.5 Ninety-percent time

A smooth wave sketched through any oscillations on the switching impulse voltage oscillogram may be used to determine the time that the applied wave is in excess of 90% of the specified crest value.

10.2.3 Failure detection

A voltage oscillogram shall be taken of each applied or induced transient. The test is successful if there is no sudden collapse of voltage indicated on the oscillograms. Successive oscillograms may differ, however, because of the influence of magnetic saturation on impulse duration.

10.2.4 Tap connections

The choice of tap connections for all windings shall be made by the manufacturer.

Copyright © 1999 IEEE. All rights reserved.

Copyright The Institute of Electrical and Electronics Engineers, Inc.
Provided by IHS under license with IEEE
No reproduction or networking permitted without license from IHS
Not for Resale

10.3 Lightning impulse test procedures

Lightning impulse tests, when required as a routine test or when otherwise specified, shall consist of and be applied in the following order: one reduced full wave, two chopped waves, and one full wave. The time interval between application of the last chopped wave and the final full wave should be minimized to avoid recovery of dielectric strength if a failure were to occur prior to the final full wave.

When front-of-wave tests are also specified, impulse tests are generally applied in the following order: one reduced full wave, two front-of-waves, two chopped waves, and one full wave.

The order of the chopped-wave and front-of-wave tests is not mandatory. However, a reduced full wave shall be applied first, and the full wave shall be the last wave to be applied to the terminal under test. Other reduced full-waves may be applied at any time during the intervening sequence.

For guide information on impulse testing techniques, interpretation of oscillograms, and failure detection criteria see IEEE Std C57.98-1993.

10.3.1 General

Impulse tests shall be made without excitation.

10.3.1.1 Full-wave test

The test wave rises to crest in 1.2 μs and decays to half of crest value in 50 μs from the virtual time zero. The crest value shall be in accordance with the assigned basic impulse insulation level (BIL), subject to a tolerance of ± 3%; and no flashover of the bushing or test gap shall occur. The tolerance on time to crest should normally be ± 30%, and the tolerance on time to half of crest shall normally be ± 20%. However, as a practical matter, the following shall be considered:

a) The time to crest shall not exceed 2.5 μs except for windings of large impulse capacitance (low-voltage, high-kilovoltampere and some high-voltage, high-kilovoltampere windings). To demonstrate that the large capacitance of the winding causes the long front, the impulse generator series resistance may be reduced. The reduction should cause superimposed oscillations. Only the inherent generator and lead inductances should be in the circuit.

b) The impedance of some windings may be so low that the desired time to the 50% voltage point on the tail of the wave cannot be obtained with available equipment. In such cases, shorter waves may be used. To ensure that an adequate test is obtained, the capacitance of the generator with the connection used should exceed 0.011 μF.

   For convenience in measurement, the time to crest may be considered as 1.67 times the actual times between points on the front of the wave at 30% and 90% of the crest value.

   The virtual time zero can be determined by locating points on the front of the wave at which the voltage is, respectively, 30% and 90% of the crest value and then drawing a straight line through these points. The intersection of this line with the time axis (zero-voltage line) is the virtual time zero.

   When oscillations exist on the front of the waves, the 30% and 90% points shall be determined from the average, smooth wave front sketched in through the oscillations. The magnitude of the oscillations preferably should not exceed 10% of the applied voltage.

   When high-frequency oscillations exist on the crest of the wave, the crest value shall be determined from a smooth wave sketched through the oscillations. When the period of these oscillations is 2 μs or more, the actual crest value shall be used.

Copyright © 1999 IEEE. All rights reserved.
Copyright The Institute of Electrical and Electronics Engineers, Inc.
Provided by IHS under license with IEEE
No reproduction or networking permitted without license from IHS
Not for Resale

10.3.1.2 Reduced full-wave test

A reduced full wave is the same as a full wave, except that the crest value shall be between 50% and 70% of the full-wave value.

10.3.1.3 Chopped-wave test

A chopped wave is also the same as a full wave, except that the crest value shall be at the required higher level and the voltage wave shall be chopped at or after the required minimum time to sparkover. In general, the gap or other equivalent chopping device shall be located as close as possible to the terminals and the impedance shall be limited to that of the necessary leads to the gap. However, the manufacturer shall be permitted to add resistance to limit the amount of overswing to the opposite polarity to 30% of the amplitude of the chopped wave.

10.3.1.4 Front-of-wave test

The wave to be used in a front-of-wave test is similar to a full wave, except that it is chopped on the front of the wave at the assigned crest level and time to sparkover. The time to sparkover for front-of-wave impulse tests shall be the time from virtual zero to the time of sparkover. As with the chopped-wave test, the manufacturer shall be permitted to add resistance in the circuit to limit the amount of overswing to the opposite polarity to 30% of the amplitude of the front-of-wave.

10.3.1.5 Wave polarity

For mineral-oil-immersed transformers, the test waves are normally of negative polarity to reduce the risk of erratic external flashover in the test circuit.

10.3.1.6 Impulse oscillograms

All impulses applied to a transformer shall be recorded by an oscilloscope or by suitable digital transient recorder, unless their crest voltage is less than 40% of the full-wave level. These oscillograms shall include voltage oscillograms for all impulses and ground-current oscillograms for all full-wave and reduced full-wave impulses. Sweep times should be in the order of 2 μs to 5 μs for front-of-wave tests, 5 μs to 10 ms for chopped-wave tests, 50 μs to 100 μs for full-wave tests, and 100 μs to 600 μs for ground-current measurements.

When reports require oscillograms, those of the first reduced full-wave voltage and current, the last two chopped waves, and the last full wave of voltage and current shall represent a record of the successful application of the impulse test to the transformer.

When transformers receiving front-of-wave impulse tests require reports that include oscillograms, those of the first reduced full-wave voltage and current, the last two front-of-waves, the last two chopped waves, and the last full wave of voltage and current shall represent a record of the successful application of the front-of-wave impulse test to the transformer.

10.3.2 Connections for impulse tests of line terminals

In general, the tests shall be applied to each terminal, one at a time.

10.3.2.1 Terminals not being tested

Neutral terminals shall be solidly grounded. Line terminals, including those of autotransformers and regulating transformers, shall be either solidly grounded or grounded through a resistor with an ohmic value not in excess of the values given in Table 3.

Copyright © 1999 IEEE. All rights reserved.

Copyright The Institute of Electrical and Electronics Engineers, Inc.
Provided by IHS under license with IEEE
No reproduction or networking permitted without license from IHS
Not for Resale

Table 3—Grounding resistor values

Nominal system voltage (kV)	Resistance (Ω)
345 and below	450
500	350
765	300
NOTE—These values are representative of typical transmission-line surge impedances.	

The following factors shall be considered in the actual choice of grounding for each terminal:

a) The voltage to ground on any terminal that is not being tested should not exceed 80% of the full-wave impulse voltage level for that terminal.
b) When a terminal has been specified to be directly grounded in service, then that terminal shall be solidly grounded.
c) When a terminal is to be connected to a low-impedance cable connection in service, then that terminal shall be either directly grounded or grounded through a resistor with an ohmic value not in excess of the surge impedance of the cable.
d) Grounding through a low-impedance shunt for current measurements may be considered the equivalent of a solid ground.

10.3.2.2 Windings for series or multiple connections

When either connection is 25 kV nominal system voltage or above, the windings shall be tested on both series and multiple connections. The test voltage for the two conditions shall correspond to the BIL of the winding for that connection. For nominal system voltages of 15 kV and below, only the series connections shall be tested unless tests on both connections are specified.

10.3.2.3 Windings for delta or wye connections

When either connection is 25 kV nominal system voltage or above, the three-phase transformer shall be tested on both delta and wye connections. The test voltage for each connection shall correspond to the BIL of the winding for that connection. For nominal system voltages of 15 kV and below, only the wye connection shall be tested unless tests on both connections are specified.

10.3.2.4 Tap connections

Tap connections shall be made with minimum effective turns in the winding under test. The choice of tap connections of windings not being tested shall be made by the manufacturer. (Regulating transformers shall be set at maximum buck position.)

10.3.2.5 Protective devices that are an integral part of the transformer

Transformers and regulators may have as an integral part nonlinear protective devices connected across whole or portions of windings. During impulse testing, operation of these protective devices may cause differences between the reduced full wave and the full-wave oscillograms. That these differences are caused by the operation of the protective devices may be demonstrated by making two or more reduced full-wave impulse tests at different voltage levels to show the trend in their operation.

Copyright © 1999 IEEE. All rights reserved.
Copyright The Institute of Electrical and Electronics Engineers, Inc.
Provided by IHS under license with IEEE
No reproduction or networking permitted without license from IHS
Not for Resale

Typical oscillograms depicting the operation of protective devices during impulse testing are shown in IEEE Std C57.98-1993.

10.3.3 Impulse tests on transformer neutrals

Impulse tests on the neutral of a transformer or a separate regulator connected in the neutral of a transformer require one reduced and two full waves to be applied directly to the neutral or regulator winding with an amplitude equal to the insulation level of the neutral. The winding being tested shall be either on the minimum voltage connection or on the maximum voltage connection. A wave having a front of not more than 10 μs and a tail of 50 μs to half-crest shall be used except that, when the inductance of the winding is so low that the desired voltage magnitude and duration to the 50% point on the tail of the wave cannot be obtained, a shorter wave tail may be used.

10.3.4 Detection of failure during impulse test

Given the nature of impulse test failures, one of the most important matters to consider is the detection of such failures. A number of indications of insulation failure exist.

10.3.4.1 Ground current oscillograms

In the ground current method of failure detection, the impulse current in the grounded end of the winding tested is measured by means of an oscilloscope, or by a suitable digital transient recorder connected across a suitable shunt inserted between the normally grounded end of the winding and ground. Any differences in the wave shape between the reduced full wave and final full wave detected by comparison of the two current oscillograms may be indications of failure or deviations due to noninjurious causes. They should be fully investigated and explained by new reduced and full-wave tests. Examples of probable causes of different wave shapes are operation of protective devices, core saturation, or conditions in the test circuit external to the transformer.

The ground current method of detection is not suitable for use with chopped-wave tests.

10.3.4.2 Other methods of failure detection

a) *Voltage oscillograms*. Any unexplained differences between the reduced full wave and final full wave detected by comparison of the two voltage oscillograms, or observed by comparing the chopped-waves to each other and to the full-wave up to the time of flashover, are indications of failure.

b) *Failure of gap to sparkover.* In making the chopped-wave test, failure of the chopping gap or any external part to sparkover, although the voltage oscillogram shows a chopped wave, is a definite indication of a failure either within the transformer or in the test circuit.

c) *Noise*. Unusual noise within the transformer at the instant of applying the impulse is an indication of trouble. Such noise should be investigated.

d) *Measurement*. Measurement of voltage and current induced in another winding may also be used for failure detection.

10.4 Routine impulse test for distribution transformers

For distribution transformers, the impulse tests specified in 10.3 are design tests. This subclause defines a routine quality control test that is suitable for high-volume production-line testing. The routine impulse test for distribution transformers applies to overhead, pad-mounted, and underground liquid-immersed distribution transformers with requirements specified in IEEE Std C57.12.20-1996, IEEE Std C57.12.22-1995,

Copyright © 1999 IEEE. All rights reserved.

Copyright The Institute of Electrical and Electronics Engineers, Inc.
Provided by IHS under license with IEEE
No reproduction or networking permitted without license from IHS
Not for Resale

IEEE Std C57.12.23-1992, IEEE Std C57.12.24-1994, ANSI C57.12.25-1990, and IEEE Std C57.12.26-1992.

10.4.1 Terminals to be tested

In the routine test, impulse tests are applied to all high-voltage line terminals. Impulse tests of the low-voltage terminals or the neutral terminal are not required. Line terminals rated more than 600 V are considered high voltage.

10.4.2 Procedure

The windings under test are connected to ground through a low-impedance shunt. The tank, the core, and either one of the low-voltage terminals or the neutral terminal are also connected to the shunt or are directly grounded. This shunt shall consist of either of the following:

a) *Ground current method*. A suitable resistance shunt or wide-band pulse current transformer is employed to examine the waveform of the ground current.
b) *Neutral impedance method*. A low-impedance shunt, consisting of a parallel combination of resistance and capacitance *R-C* is employed. The voltage across this neutral impedance shunt is examined.

An impulse voltage with 1.2 × 50 μs wave shape and with specified crest magnitude shall be applied in each test. The tolerances, polarity, and method of determining the wave shape shall be as specified in 10.3.1.1 and 10.3.1.5. During each test the waveform of the ground current or the voltage wave across the neutral impedance shall be examined.

The required impulse tests shall be applied using either of the test series in 10.4.2.1 or 10.4.2.2.

10.4.2.1 Method 1

One reduced full-wave test is performed, followed by one 100% magnitude full-wave test. The applied voltage wave in the first test shall have a crest value of between 50 and 70% of the assigned BIL. The applied voltage wave in the second test shall have a crest value of 100% of the assigned BIL. Failure detection is accomplished by comparing the reduced full-wave test with the 100% magnitude full-wave test, using either the ground current waveform or the neutral impedance voltage waveform. A dielectric breakdown will cause a difference in compared waveforms. Observed differences in the waveforms may be indications of failure, or they may be due to noninjurious causes. The criteria used to judge the magnitude of observed differences shall be based upon the ability to detect a staged single-turn fault made by placing a loop of wire around the core leg and over the coil.

10.4.2.2 Method 2

Two full-wave tests, with crest magnitude equal to the assigned BIL, are applied to the transformer under test. A neutral impedance shunt, using suitable values of *R* and *C*, is employed to record waveforms for comparison. The waveforms in both tests are compared to pre-established levels. A dielectric breakdown will cause a significant upturn and increase in magnitude of the voltage wave examined across the neutral impedance. The pre-established levels are based upon a staged single-turn fault test, made by placing a loop of wire around the core leg and over the coil.

10.4.2.3 Failure detection

The failure detection methods described in 10.4.2.1 and 10.4.2.2 for the routine impulse test are based on the following two conditions:

--`,,`-`-`,,`,,`,`,,`---
Copyright © 1999 IEEE. All rights reserved.
Copyright The Institute of Electrical and Electronics Engineers, Inc.
Provided by IHS under license with IEEE
No reproduction or networking permitted without license from IHS
Not for Resale

a) The transformer connections during the test are such that no low-voltage windings are shorted.
b) Chopped-wave tests are not applied.

In addition to these methods of failure detection, other methods of failure detection, as described in 10.3.4.2, are also indications of failure and should be investigated.

When the test is complete and the process of failure detection is complete, the waveform records may be discarded.

The routine impulse test may be conducted either before or after the low-frequency dielectric tests; however, the preferred sequence is for the impulse test to precede the low-frequency dielectric tests.

10.4.3 Terminals not being tested

All high-voltage terminals not being tested shall be solidly grounded for impulse tests of the high-voltage windings. However, if two high-voltage terminals are grounded, causing a short circuit across one or more of the high-voltage windings, the failure detection sensitivity of the test may be impaired, and a single-turn fault may not be detectable. In such cases, only one high-voltage terminal should be grounded. Grounding through a low-impedance shunt for current measurements may be considered the equivalent of a solid ground. The low-voltage windings shall be solidly grounded for impulse tests of the high-voltage windings by applying the ground to only one low-voltage terminal in order to avoid a deliberate short circuit across any low-voltage winding. Selection of the low-voltage terminal to be grounded should be as follows:

a) For a single-phase three-wire connection, where X_2 would be grounded in service, terminal X_2 shall be solidly grounded and terminals X_1 and X_3 shall be open except as provided in the paragraph that follows this list.
b) For a single-phase two-wire connection, where either X_1 or X_2 may be grounded in service, then either terminal X_1 or X_2 shall be solidly grounded; and the remaining terminal shall be open except as provided in the paragraph that follows this list.
c) For a three-phase four-wire connection, where X_0 would be grounded in service, terminal X_0 shall be grounded and terminals X_1, X_2, and X_3 shall be open except as provided in the paragraph that follows this list.
d) For a three-phase three-wire delta connection, only one of the low-voltage terminals X_1, X_2, or X_3 shall be solidly grounded, while the two remaining terminals shall be open, except as provided in the paragraph that follows this list.

For series multiple or other low-voltage connections not covered specifically above, the low-voltage windings shall be grounded in accordance with the principle of grounding the winding without causing a direct short circuit across any low-voltage winding and preferably selecting the terminal that will be grounded in service.

It is permissible to limit the voltage to ground of any low-voltage terminal by connecting a resistor across the low-voltage windings. This resistor shall be sized to limit the induced voltage to less than 80% of the BIL level of the terminal. Current flowing in the limiting resistor shall not interfere with the ability to detect a staged single-turn fault.

10.4.4 Windings for series or multiple connections

For high-voltage windings with series or multiple connections, the routine impulse test shall be conducted on each connection at its assigned BIL.

Copyright © 1999 IEEE. All rights reserved.

Copyright The Institute of Electrical and Electronics Engineers, Inc.
Provided by IHS under license with IEEE
No reproduction or networking permitted without license from IHS
Not for Resale

10.4.5 Windings for delta or wye connections

For high-voltage windings with delta or wye connections, the routine impulse test shall be conducted on each connection at its assigned BIL.

10.4.6 Tap connections

For windings with taps, the routine impulse test shall be performed in the tap connection for shipment in accordance with Clause 10 of IEEE Std C57.12.00-1993.

10.5 Low-frequency tests

Low-frequency tests shall be performed in accordance with the requirements of 5.10, Table 4, Table 5, Table 6, and Table 7 of IEEE Std C57.12.00-1993.

For distribution transformers and Class I power transformers, the low-frequency tests levels are developed by the applied voltage and induced voltage tests described in 10.6 and 10.7, or combinations thereof. The induced voltage test may involve either single or three-phase excitation.

For Class II power transformers, the low-frequency tests involve a special induced test as described in 10.8 and applied-voltage tests as described in 10.6.

10.6 Applied voltage tests

10.6.1 Duration, frequency, and connections

A normal power frequency, such as 60 Hz, shall be used; and the duration of the test shall be 1 min.

The winding being tested shall have all its parts joined together and connected to the line terminal of the testing transformer.

All other terminals and parts (including core and tank) shall be connected to ground and to the other terminal of the testing transformer.

10.6.2 Relief gap

A relief gap set at a voltage 10% or more in excess of the specified test voltage may be connected during the applied voltage test.

10.6.3 Application of test voltage

The voltage should be started at one quarter or less of the full value and be brought up gradually to full value in not more than 15 s. After being held for the time specified, it should be reduced gradually (in not more than 5 s) to one quarter or less of the maximum value and the circuit opened.

10.6.4 Failure detection

Careful attention should be maintained for evidence of possible failure, such as an indication of smoke and bubbles rising in the oil, an audible sound such as a thump, or a sudden increase in test circuit current. Any such indication should be carefully investigated by observation, by repeating the test, or by other tests to determine whether a failure has occurred.

Copyright © 1999 IEEE. All rights reserved.
Copyright The Institute of Electrical and Electronics Engineers, Inc.
Provided by IHS under license with IEEE
No reproduction or networking permitted without license from IHS
Not for Resale

10.7 Induced voltage tests for distribution and Class I power transformers

10.7.1 Test duration

The induced voltage test shall be applied for 7200 cycles, or 60 s, whichever is shorter.

10.7.2 Test frequency

As an induced voltage test applies greater than rated volts per turn to the transformer, the frequency of the impressed voltage shall be high enough to limit the flux density in the core to that permitted by 4.1.6.1 (2) of IEEE Std C57.12.00-1993. The minimum test frequency to meet this condition is given in Equation (24).

$$\text{Minimum test frequency} = \frac{E_t}{1.1 \times E_r} \times \text{rated frequency} \tag{24}$$

where

E_t is the induced voltage across winding,
E_r is the rated voltage across winding.

10.7.3 Application of voltage

The voltage should be started at one quarter or less of the full value and be brought up gradually to full value in not more than 15 s. After being held for the time specified in 10.7.1, it should be reduced gradually (in not more than 5 s) to one quarter or less of the maximum value and the circuit opened.

10.7.3.1 Timing during partial discharge (PD) measurement concurrent with induced voltage test

The timing involved in reaching test voltage level and reducing voltage may be longer when PD measurements or tests are being made concurrently with the induced voltage test.

10.7.4 Grounding of windings

When a transformer has one end of the high-voltage winding grounded, the other windings should be grounded during the induced voltage test. This ground on each winding may be made at a selected point of the winding itself or of the winding of a step-up transformer that is used to supply the voltage or that is connected for the purpose of furnishing the ground.

10.7.5 Need for additional induced tests

When the induced test on a winding results in a voltage between terminals of other windings in excess of the low-frequency test voltage specified in these standards, the other winding may be sectionalized and grounded. Additional induced tests shall then be made to give the required test voltage between terminals of windings that were sectionalized.

10.7.6 Failure detection

Careful attention should be maintained for evidence of possible failure, such as an indication of smoke and bubbles rising in the oil, an audible sound such as a thump, a sudden increase in test circuit current, or an appreciable increase in PD level. Any such indication should be carefully investigated by observation, by repeating the test, or by other tests to determine whether a failure has occurred.

Copyright © 1999 IEEE. All rights reserved.

Copyright The Institute of Electrical and Electronics Engineers, Inc.
Provided by IHS under license with IEEE
No reproduction or networking permitted without license from IHS
Not for Resale

10.8 Induced voltage test for Class II power transformers

10.8.1 General

Each Class II power transformer shall receive an induced voltage test with the required test levels induced in the high-voltage winding. The tap connections shall be chosen where possible so that test levels developed in the other windings are 1.5 times their maximum operating voltages, as specified in ANSI C84.1-1995.

10.8.2 Test procedure

The voltage shall first be raised to the 1 h level and held long enough to verify that no PD problems exist. The voltage shall then be raised to the enhancement level and held for 7200 cycles. The voltage shall then be reduced directly back to the 1 h level and held for 1 h.

During this 1 h period, PD measurements shall be made at 5 min intervals on each line terminal 115 kV and above. These measurements shall be made in accordance with 10.9.

10.8.3 Connections

The transformer shall be excited exactly as it will be in service. Single-phase transformers shall be excited from single-phase sources. Three-phase transformers shall be excited from three-phase sources.

The neutral terminals shall be solidly grounded. This will stress all of the insulation at the same per unit of overstress.

10.8.4 Frequency

The test frequency shall be increased, relative to operating frequency, as required to avoid core saturation. The requirements in 10.7.2 are also applicable in the case of this induced test.

10.8.5 Failure detection

Failure may be indicated by the presence of smoke and bubbles rising in the oil, an audible sound such as a thump, or a sudden increase in test current. Any such indication shall be carefully investigated by observation, by repeating the test, or by other tests to determine whether a failure has occurred.

In terms of interpretation of PD measurements, the results shall be considered acceptable and no further PD tests required under the following conditions:

a) The magnitude of the PD level does not exceed 100 μV.
b) The increase in PD levels during the 1 h does not exceed 30 μV.
c) The PD levels during the 1 h do not exhibit any steadily rising trend, and no sudden, sustained increase in levels occurs during the last 20 min of the tests.

Judgment should be used on the 5 min readings so that momentary excursions of the radio-influence voltage (RIV) meter caused by cranes or other ambient sources are not recorded. Also, the test may be extended or repeated until acceptable results are obtained.

When no breakdown occurs, and unless very high PDs are sustained for a long time, the test is regarded as nondestructive. A failure to meet the PD acceptance criterion shall, therefore, not warrant immediate rejection, but lead to consultation between purchaser and manufacturer about further investigations.

Copyright © 1999 IEEE. All rights reserved.
Copyright The Institute of Electrical and Electronics Engineers, Inc.
Provided by IHS under license with IEEE
No reproduction or networking permitted without license from IHS
Not for Resale

10.9 PD measurement

10.9.1 Internal PDs

Apparent internal PDs shall be determined in terms of the RIV generated and measured at the line terminals of the winding under test.

NOTE—PD activity within the transformer may also be measured in terms of apparent charge (picocoulomb). This approach should normally provide several advantages, including less attenuation of signal. General principles and circuits are described in IEEE Std 454-1973 [B5][6] and in IEEE Std C57.113-1991. Where agreed to by both the user and the manufacturer, apparent charge measurements may be used in lieu of or in conjunction with RIV measurements.

10.9.2 Instrumentation

A radio noise and field strength meter conforming to ANSI C63.2-1996 shall be used to measure the RIV generated by any internal PDs. The measurement shall be on a quasi-peak basis at a nominal frequency of 1 MHz, although any frequency from 0.85 MHz to 1.15 MHz may be used to discriminate against local radio-station signal interference. The radio-noise meter shall be coupled to the line terminal(s) of the winding under test through the capacitance tap of the bushing(s). A suitable device shall be used to compensate for the capacitance dividing effect produced by the bushing tap-to-ground capacitance plus that of all elements between the bushing tap and the meter (for example, coaxial cables and adapters). This device shall be tuned to minimize the dividing effect of the capacitances and to convey the RIV signal to the radio-noise meter with a minimum of attenuation. External shielding may be used to avoid air corona, such as may occur at the bushing terminals or grounded projections. Radio-frequency chokes or tuned filters may be used to isolate the transformer under test and the RIV-measuring circuit from the remainder of the test circuit, including its energy source.

10.9.3 Calibration

The test circuit components connected to the winding under test may attenuate the generated RIV level and add to the measured RIV background level. It is, therefore, necessary to determine the relationship between the RIV at the terminal of the winding under test and the RIV reading of the radio-noise meter when connected at its normal location in the test circuit. The steps in establishing this calibration ratio are as follows:

a) Apply to the terminal under test a signal of approximately 100 μV at the measuring frequency.
b) Measure the voltage at the terminal with the radio-noise meter connected directly to the terminal.
c) With the same radio-noise meter, measure the voltage provided by the test circuit at the location where the radio-noise meter will be connected during the PD test on the transformer. A second radio-noise meter may be used for this measurement, provided its relationship to the first has been established at the measuring frequency.
d) Use the ratio of the calibration signal voltage measured at the transformer terminal to that measured at the normal meter location in the test circuit as a multiplier on the RIV at the terminal of the winding under test.
e) Establish that this calibration ratio remains valid over the RIV range of interest.

NOTE—See IEEE Std 454-1973 [B5] for further background information.

[6]The numbers in brackets correspond to those of the bibliography in Annex A.

Copyright © 1999 IEEE. All rights reserved.

Copyright The Institute of Electrical and Electronics Engineers, Inc.
Provided by IHS under license with IEEE
No reproduction or networking permitted without license from IHS
Not for Resale

10.10 Insulation power-factor tests

Insulation power factor is the ratio of the power dissipated in the insulation in watts to the product of the effective voltage and current in voltamperes when tested under a sinusoidal voltage and prescribed conditions.

The methods described in this standard are applicable to distribution and power transformers of present-day design that are immersed in an insulating liquid.

10.10.1 Preparation for tests

The test specimen shall have the following:

a) All windings immersed in insulating liquid,
b) All windings short-circuited,
c) All bushings in place,
d) Temperature of windings and insulating liquid near the reference temperature of 20 °C.

10.10.2 Instrumentation

Insulation power factor may be measured by special bridge circuits or by the voltampere-watt method. The accuracy of measurement should be within ± 0.25% insulation power factor, and the measurement should be made at or near a frequency of 60 Hz.

10.10.3 Voltage to be applied

The voltage to be applied for measuring insulation power factor shall not exceed half of the low-frequency test voltage given in Table 4 of IEEE Std C57.12.00-1993 for any part of the winding or 10 000 V, whichever is lower.

10.10.4 Procedure

Insulation power-factor tests shall be made from windings to ground and between windings as shown in Table 4.

--`,,`-`-`,,`,,`,`,,`---
Copyright © 1999 IEEE. All rights reserved.
Copyright The Institute of Electrical and Electronics Engineers, Inc.
Provided by IHS under license with IEEE
No reproduction or networking permitted without license from IHS
Not for Resale

Table 4—Measurements to be made in insulation power-factor tests

Method I Test without guard circuit[a]	Method II Test with guard circuit[a]
Two-winding transformers[b]	Two-winding transformers [b]
High to low and ground	High to low and ground
Low to high and ground	High to ground, guard on low
High and low to ground	Low to high and ground
—	Low to ground, guard on high
Three-winding transformers[b]	Three-winding transformers[b]
High to low, tertiary, and ground	High to low and ground, guard on tertiary
Low to high, tertiary, and ground	High to ground, guard on low and tertiary
Tertiary to high, low, and ground	Low to tertiary and ground, guard on high
High and low to tertiary and ground	Low to ground, guard on high and tertiary
High and tertiary to low and ground	Tertiary to high and ground, guard on low
Low and tertiary to high and ground	Tertiary to ground, guard on high and low
High, low, and tertiary to ground	High and low to tertiary and ground
	High and tertiary to low and ground

NOTE 1—While the real significance that can be attached to the power factor of liquid-immersed transformers is still a matter of opinion, experience has shown that power factor is helpful in assessing the probable condition of the insulation when good judgment is used.

NOTE 2—In interpreting the results of power-factor test values, the comparative values of tests taken at periodic intervals are useful in identifying potential problems rather than an absolute value of power factor.

NOTE 3—A factory power-factor test will be of value for comparison with field power-factor measurements to assess the probable condition of the insulation. It has not been feasible to establish standard power-factor values for liquid-immersed transformers for the following reasons:

a) Experience has indicated that little or no relation exists between power factor and the ability of the transformer to withstand the prescribed dielectric tests.
b) Experience has shown that the variation in power factor with temperature is substantial and erratic so that no single correction curve will fit all cases.
c) The various liquids and insulating materials used in transformers result in large variations in insulation power-factor values.

[a]In this table the term *guard* signifies one or more conducting elements arranged and connected on an electrical instrument or measuring circuit to divert unwanted currents from the measuring means.
[b]Permanently connected windings, such as in autotransformers and regulators, shall be considered as one winding.

Copyright © 1999 IEEE. All rights reserved.

Copyright The Institute of Electrical and Electronics Engineers, Inc.
Provided by IHS under license with IEEE
No reproduction or networking permitted without license from IHS
Not for Resale

10.10.5 Temperature correction factors

Temperature correction factors for the insulation power factor depend upon the insulating materials and their structure, moisture content, etc. Values of correction factor K listed in Table 5 are typical and are satisfactory for practical purposes for use in Equation (25).

$$F_{p20} = \frac{F_{pt}}{K} \tag{25}$$

where

F_{p20} is the power factor corrected to 20 °C,
F_{pt} is the power factor measured at T,
T is the test temperature (°C),
K is the correction factor.

Insulation temperature may be considered to be that of the average liquid temperature. When insulation power factor is measured at a relatively high temperature and the corrected values are unusually high, the transformer should be allowed to cool; and the measurements should be repeated at or near 20 °C.

Table 5—Temperature correction factors for insulation power factors

Test temperature T (°C)	Correction factor K
10	0.80
15	0.90
20	1.00
25	1.12
30	1.25
35	1.40
40	1.55
45	1.75
50	1.95
55	2.18
60	2.42
65	2.70
70	3.00

NOTE—The correction factors listed above are based on insulating systems using mineral oil as an insulating liquid. Other insulation liquids may have different correction factors.

Copyright © 1999 IEEE. All rights reserved.
Copyright The Institute of Electrical and Electronics Engineers, Inc.
Provided by IHS under license with IEEE
No reproduction or networking permitted without license from IHS
Not for Resale

10.11 Insulation resistance tests

Insulation resistance tests shall be made when specified. Insulation resistance tests are made to determine the insulation resistance from individual windings to ground or between individual windings. The insulation resistance in such tests is commonly measured in megohms or may be calculated from measurements of applied voltage and leakage current.

NOTE 1—The insulation resistance of electrical apparatus is of doubtful significance compared with the dielectric strength. It is subject to wide variation in design, temperature, dryness, and cleanliness of the parts. When the insulation resistance falls below prescribed values, it can, in most cases of good design and where no defect exists, be brought up to the required standard by cleaning and drying the apparatus. The insulation resistance, therefore, may afford a useful indication as to whether the apparatus is in suitable condition for application of dielectric test.

NOTE 2—The significance of values of insulation-resistance tests generally requires some interpretation, depending on the design and the dryness and cleanliness of the insulation involved. When a user decides to make insulation resistance tests, it is recommended that insulation resistance values be measured periodically (during maintenance shutdown) and that these periodic values be plotted. Substantial variations in the plotted values of insulation resistance should be investigated for cause.

NOTE 3—Insulation resistances may vary with applied voltage and any comparison shall be made with measurements at the same voltage.

NOTE 4—Under no conditions should tests be made while the transformer is under vacuum.

10.11.1 Preparation for tests

The test specimen shall have the following:

a) All windings immersed in insulating liquid.
b) All windings short-circuited.
c) All bushings in place.,
d) Temperature of windings and insulating liquid near the reference temperature of 20 °C.

10.11.2 Instrumentation

Insulation resistance may be measured using the following equipment:

a) A variable-voltage dc power supply with means to measure voltage and current (generally in microamperes or milliamperes).
b) A megohmeter.

NOTE—Megohmeters are commonly available with nominal voltages of 500 V, 1000 V, and 2500 V; dc applied test equipment is available at higher voltages.

10.11.3 Voltage to be applied

The dc voltage applied for measuring insulation resistance to ground shall not exceed a value equal to the rms low-frequency applied voltage allowed in 10.6.

NOTE 1—PDs should not be present during insulation resistance tests since they can damage a transformer and may also result in erroneous values of insulation resistance.

NOTE 2—When measurements are to be made using dc voltages exceeding the rms operating voltage of the winding involved (or 1000 V for a solidly grounded wye winding), a relief gap may be employed to protect the insulation.

Copyright © 1999 IEEE. All rights reserved.

Copyright The Institute of Electrical and Electronics Engineers, Inc.
Provided by IHS under license with IEEE
No reproduction or networking permitted without license from IHS
Not for Resale

10.11.4 Procedure

Insulation-resistance tests shall be made with all circuits of equal voltage above ground connected together. Circuits or groups of circuits of different voltage above ground shall be tested separately. Examples of procedures include the following:

a) High voltage to low voltage and ground, low voltage to high voltage and ground.
b) Voltage should be increased in increments of usually 1 kV to 5 kV and held for 1 min while the current is read.
c) The test should be discontinued immediately if the current begins to increase without stabilizing.
d) After the test has been completed, all terminals should be grounded for enough time to allow any trapped charges to decay to a negligible value.

11. Temperature rise

See 5.11.2 of IEEE Std C57.12.00-1993 for conditions under which temperature limits apply. The transformers shall be tested in the combination of connections and taps that gives the highest winding temperature rises as determined by the manufacturer and reviewed by the purchaser's representative when available. This will generally involve the connections and taps resulting in the highest losses.

All temperature rise tests shall be made under normal (or equivalent to normal) conditions of the means of cooling.

a) Transformers shall be completely assembled and filled to the proper liquid level.
b) When the transformers are equipped with thermal indicators, bushing current transformers, or the like, such devices shall be assembled with the transformer.
c) The temperature-rise test shall be made in a room that is as free from drafts as practicable.

11.1 Ambient temperature measurement

11.1.1 Air-cooled transformers

For air-cooled transformers, the ambient temperature shall be taken as that of the surrounding air, which shall not be less than 10 °C nor more than 40 °C. For temperatures within this range, no correction factor shall be applied. Tests may be made at temperatures outside this range when suitable correction factors are available.

The temperature of the surrounding air shall be determined by at least three thermocouples or thermometers in containers spaced uniformly around the transformer under test. They shall be located at about half the height of the transformer and at a distance of 1 m to 2 m (3 ft to 6 ft) from the transformer. They shall be protected from drafts and from radiant heat from the transformer under test or other sources.

When the time constant of the transformer, as calculated according to Equation (9) of IEEE Std C57.92-1981, is 2 h or less, the time constant of the containers shall be between 50% and 150% of that of the transformer under test. When the time constant of the transformer under test is more than 2 h, the time constant of the containers shall be within 1 h of that of the transformer under test.

The time constant of the containers shall be taken as the time necessary for its temperature to change 6.3 °C when the ambient temperature is abruptly changed 10 °C.

Copyright © 1999 IEEE. All rights reserved.
Copyright The Institute of Electrical and Electronics Engineers, Inc.
Provided by IHS under license with IEEE
No reproduction or networking permitted without license from IHS
Not for Resale

11.1.2 Water-cooled transformers

For water-cooled transformers, the flow rate, in liters per minute (gallons per minute), and the temperature of the incoming and outgoing water shall be measured.

The ambient temperature shall be taken as that of the incoming water that shall not be less than 20 °C nor more than 30 °C. For temperatures within this range, no correction factor shall be applied. Tests may be made at temperatures outside this range when suitable correction factors are available.

11.2 Liquid rise measurement

a) Liquid temperature rise is the difference between liquid temperature and the ambient temperature. The ultimate liquid temperature rise above ambient shall be considered to be reached when the temperature rise does not vary more than 2.5% or 1 °C, whichever is greater, during a consecutive 3 h period. Shortening the time required for the test by using initial overloads, restricted cooling, etc. is permissible.

b) The top liquid temperature shall be measured by a thermocouple or suitable thermometer immersed approximately 50 mm (2 in) below the top liquid surface.

c) The average liquid temperature shall be taken to be equal to the top liquid temperature minus half the difference in temperature of the moving liquid at the top and the bottom of the cooling means. Where the bottom liquid temperature cannot be measured directly, the temperature difference may be taken to be the difference between the surface temperature of the liquid inlet and outlet.

d) A thermocouple is the preferred method of measuring surface temperature (see 11.4 for method of measurement).

11.3 Average winding temperature-rise measurement

The average temperature rise of a winding shall be the average winding temperature minus the ambient temperature.

The average temperature of the winding shall be determined by the resistance method. Where the use of the resistance method is impossible (for example, with extremely low-resistance windings), other methods may be used. Readings should be taken as soon as possible after shutdown, allowing sufficient time for the inductive effects to disappear as indicated from the cold-resistance measurement. The time from the instant of shutdown for each resistance measurement shall be recorded. Fans and cooling water shall be shut off during shutdown for resistance measurement. Oil pumps may be shut off or left running during shutdown for resistance measurement. The average temperature of a winding shall be determined by Equation (26).

$$T = \frac{R}{R_0}(T_k + T_0) - T_k \tag{26}$$

where

T is the temperature (°C) corresponding to hot resistance R,
T_0 is the temperature (°C) at which cold resistance R_0 was measured,
R_0 is the cold resistance, measured according to Clause 5, (Ω),
R is the hot resistance (Ω),
T_k is 234.5 °C for copper and 225.0 °C for aluminum.

NOTE—The value of T_k may be as high as 230 °C for alloyed aluminum.

Copyright © 1999 IEEE. All rights reserved.

Copyright The Institute of Electrical and Electronics Engineers, Inc.
Provided by IHS under license with IEEE
No reproduction or networking permitted without license from IHS
Not for Resale

11.3.1 Temperature correction to instant of shutdown

Either of two correction factor procedures shall be used depending upon the winding load loss density. For these determinations, the winding load loss density for the winding connection shall be taken as the sum of the calculated I^2R and eddy losses of, the winding at the rated temperature rise plus 20 °C divided by the calculated conductor weight of the connected winding.

11.3.1.1 Empirical method

This method may be used for transformers typical of those built to the requirements of IEEE Transformer Committee (C57) standards when the load loss of the winding does not exceed 66 W/kg (30 W/lb) for copper or 132 W/kg (60 W/lb) for aluminum.

One reading of hot resistance shall be taken on each winding, the time after shutdown recorded, and the corresponding temperature determined.

All readings of hot resistance shall be made within 4 min of shutdown. If all required readings cannot be made within 4 min, the temperature test shall be resumed for 1 h, after which readings may again be taken.

The temperature correction to instant of shutdown shall be an added number of degrees equal to the factor taken from Table 6 multiplied by the windings [W/kg (W/lb)]. Factors for intermediate times may be obtained by interpolation.

When the load loss of the winding does not exceed 15 W/kg (7 W/lb) for copper or 31 W/kg (14 W/lb) for aluminum, a correction of 1 °C/min may be used.

Table 6—Winding temperature correction factors

Time after shutdown (min)	Winding temperature correction factor			
	Copper	Aluminum	Copper	Aluminum
	(W/kg)		(W/lb)	
1	0.09	0.032	0.19	0.07
1.5	0.12	0.045	0.26	0.10
2	0.15	0.059	0.32	0.13
3	0.20	0.077	0.43	0.17
4	0.23	0.095	0.50	0.21

11.3.1.2 Cooling curve method

A series of at least four readings of resistance shall be made on one phase of each winding and the time recorded for each reading.

The first reading of each series shall be made as soon as the inductive effect has subsided and not more than 4 min after shutdown.

After a set of readings on resistance has been taken, the run shall be resumed for a period of 1 h, after which further readings may be taken. This shall be repeated until all necessary readings have been taken.

Copyright © 1999 IEEE. All rights reserved.
Copyright The Institute of Electrical and Electronics Engineers, Inc.
Provided by IHS under license with IEEE
No reproduction or networking permitted without license from IHS
Not for Resale

The resistance/time data shall be plotted on suitable coordinate paper and the resulting curve extrapolated to obtain the resistance at the instant of shutdown. This resistance shall be used to calculate the average winding temperature at shutdown.

The resistance/time data obtained on one phase of a winding may be used to determine the correction back to shutdown for the other phases of the same winding, provided the first reading on each of the other phases has been taken within 4 min after shutdown.

11.4 Other temperature measurements

When measured, the temperature rise of metal parts other than windings shall be determined by use of a thermocouple or suitable thermometer.

A thermocouple is the preferred method of measuring surface temperature. When used for this purpose, the thermocouple should be soldered to the surface. When this is not practical, the thermocouple should be soldered to a thin metal plate or foil approximately 625 mm^2 (1 in^2). The plate should be held firmly and snugly against the surface. The thermocouple should be thoroughly insulated thermally from the surrounding medium.

The surface temperature of metal parts surrounding or adjacent to outlet leads or terminals carrying heavy current may be measured at intervals or immediately after shutdown.

11.5 Test methods

Tests shall be made by one of the following methods:

a) Actual loading
b) Simulated loading
    1) The short-circuit method, in which appropriate total losses are produced by the effect of short-circuit current.
    2) The loading back (opposition) method, in which rated voltage and current are induced in the transformer under test.

11.5.1 Actual loading

The actual loading method is the most accurate of all methods, but its energy requirements are excessive for large transformers.

Transformers of small output may be tested under actual load conditions by loading them on a rheostat, bank of lamps, water box, and so forth.

11.5.2 Simulated loading

11.5.2.1 Short-circuit method

a) Short-circuit one or more windings and circulate sufficient current at rated frequency to produce total losses for the connection and loading used. Total losses shall be those measured in accordance with Clauses 8 and 9 of this standard and converted to a temperature equal to the rated average winding temperature rise plus 20 °C.
b) Determine liquid rises as described in 11.2.

Copyright © 1999 IEEE. All rights reserved.

Copyright The Institute of Electrical and Electronics Engineers, Inc.
Provided by IHS under license with IEEE
No reproduction or networking permitted without license from IHS
Not for Resale

c) Immediately reduce the current in the windings to the rated value for the connection and the loading used, hold constant for 1 h, measure liquid temperature, shut down, and measure the average winding temperature as described in 11.3. When test equipment limitations dictate, operating at a value lower than rated current, but not less than 85% of rated current, is permissible.

d) Average winding rise shall be calculated by using either top liquid rise or average liquid rise. When other than rated winding current is used, the average liquid rise method shall be used to determine winding rises.

   1) In the top liquid rise method, the average winding temperature rise is equal to the top liquid rise, measured during the total loss run, plus the quantity (that is, average winding temperature at shutdown minus top liquid temperature at shutdown).

   2) In the average liquid rise method, the average winding rise is the average liquid rise, measured during the total loss run, plus the quantity (that is, average winding temperature at shutdown minus average liquid temperature at shutdown).

When the current held in any of the windings under test differs from the rated current, the observed differences between the average winding temperature at shutdown and the average liquid temperature at shutdown shall be corrected to give the average temperature rise of the windings at the rated current by using Equation (27).

$$T_c = T_o\left(\frac{\text{Rated Current}}{\text{Test Current}}\right)^{2m} \tag{27}$$

where

T_c is the corrected difference between average winding temperature, corrected to shutdown, and the average liquid temperature at shutdown

T_o is the observed difference between average winding temperature, corrected to shutdown, and the average liquid temperature at shutdown

m is 0.8 for Class OA and FA and nondirected Class FOA and FOW and 1.0 for directed-flow Class FOA and FOW.

The corrected average winding rise is the average liquid rise, measured during the total loss run, plus T_c.

11.5.2.2 Loading back method

Duplicate transformers may be tested by connecting their respective high-voltage and low-voltage windings in parallel (Figure 27 and Figure 28). Apply rated voltage at rated frequency to one set of windings. Circulate load current by opening the connections of either pair of windings at one point and impress a voltage across the break just sufficient to circulate rated current through the windings. Obtain top fluid rise as described in 11.2. Then shut down and measure winding rise as in 11.3.

Copyright © 1999 IEEE. All rights reserved.
Copyright The Institute of Electrical and Electronics Engineers, Inc.
Provided by IHS under license with IEEE
No reproduction or networking permitted without license from IHS
Not for Resale

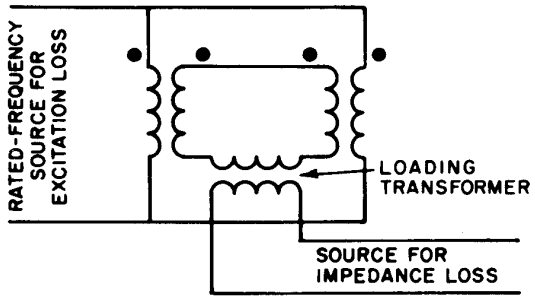

Figure 27—Example of loading back method: Single-phase

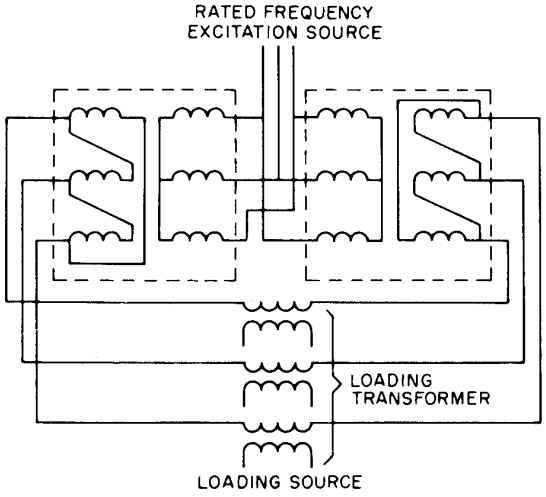

Figure 28—Example of loading back method: Three-phase

When load current at other than rated frequency is used, the frequency may not differ from rated frequency by more than 10%, and liquid rise shall be corrected by using one of the methods in 11.5.2.2.1 or 11.5.2.2.2.

11.5.2.2.1 Calculation

The calculation method may be used when actual loss is within 20% of the required loss.

$$T_d = T_b\left\{\left(\frac{W}{w}\right)^n - 1\right\} \tag{28}$$

where

T_d	is the liquid rise correction (°C),
T_b	is the observed liquid rise (°C),
W	is the required loss (W),
w	is the actual loss (W),
n	is 0.8 for Class OA, 0.9 for Class FA, and 1.0 for Class FOA and FOW,
Corrected liquid rise	is observed liquid rise + T_d ,
Corrected winding rise	is observed winding rise + T_d .

Copyright © 1999 IEEE. All rights reserved.

Copyright The Institute of Electrical and Electronics Engineers, Inc.
Provided by IHS under license with IEEE
No reproduction or networking permitted without license from IHS
Not for Resale

11.5.2.2.2 Adjust the losses

When the top liquid rise approaches a constant condition, adjust the excitation voltage until the sum of the excitation loss and the load loss as measured during the temperature test equals the required loss. Obtain top fluid rise as described in 11.2.

11.6 Correction of temperature rises for differences in altitude

When tests are made at an altitude of 1000 m (3300 ft) or less, no altitude correction shall be applied to the temperature rises.

When a transformer tested at an altitude of less than 1000 m (3300 ft) is to be operated at an altitude above 1000 m (3300 ft), it shall be assumed that the temperature rises will increase in accordance with Equation (29).

$$T_A = T_e\,(A/A_o - 1)F \tag{29}$$

where

T_A is the increase in temperature rise at altitude A m (°C),
T_e is the observed temperature rise (°C),
A is altitude (m),
A_o is 1000 m (3300 ft),
F is 0.04 for self-cooled mode and 0.06 for forced-air-cooled mode.

12. Short-circuit tests

12.1 General

This test code applies to liquid-immersed distribution and power transformers 5 kVA and above. Within this range, four categories shall be recognized as listed in Table 7.

Table 7—Transformer categories covered by this test code

Category	Single-phase (kVA)	Three-phase (kVA)
I[a]	5 to 500	15 to 500
II	501 to 1667	501 to 5000
III	1668 to 10 000	5001 to 30 000
IV	Above 10 000	Above 30 000
NOTE—All kilovoltampere ratings are minimum nameplate kilovoltampere for the principal windings.		

[a]Category I shall include distribution transformers manufactured in accordance with ANSI C57.12.20-1998 up through 500 kVA, single-phase or three-phase. In addition, autotransformers of 500 kVA-equivalent two-winding kilovoltampere or less that are manufactured as distribution transformers in accordance with ANSI C57.12.20-1998 shall be included in Category I even though their nameplate kilovoltampere may exceed 500 kVA.

Copyright © 1999 IEEE. All rights reserved.
Copyright The Institute of Electrical and Electronics Engineers, Inc.
Provided by IHS under license with IEEE
No reproduction or networking permitted without license from IHS
Not for Resale

The code defines a procedure by which the mechanical capability of a transformer to withstand short-circuit stresses may be demonstrated. The prescribed tests are not designed to verify thermal performance. Conformance to short-circuit thermal requirements shall be by calculation in accordance with Clause 7 of IEEE Std C57.12.00-1993.

The short-circuit test procedure described in this standard is intended principally for application to new transformers to verify design. Tests may be conducted at manufacturer's facilities, test laboratories, or in the field; but it shall be recognized that complete equipment is not usually available in the field for conducting tests and verifying results.

12.2 Test connections

12.2.1 Two-winding transformers and autotransformers without tertiary windings

12.2.1.1 Fault location

The short circuit may be applied on the transformer primary or secondary terminals as dictated by the available voltage source, but the secondary fault is preferred since it most closely represents the system fault condition. The short circuit shall be applied by means of suitable low-resistance connectors.

In order of preference, the tests may be conducted by either of the following:

a) Closing a breaker at the faulted terminal to apply a short circuit to the previously energized transformer.
b) Closing a breaker at the source terminal to apply energy to the previously short-circuited transformer.

12.2.1.2 Fault type

The type of fault to be applied will be dependent on the available energy source. Any of the following types may be used (given in order of preference for three-phase transformers):

a) Three-phase source: three-phase short circuit
b) Three-phase source: single phase-to-ground short circuit
c) Single-phase source: simulated three-phase short circuit

NOTE—For wye-connected windings, apply source or fault between one line terminal and the other two connected together. For delta-connected windings, apply source or fault between two line terminals with no connection to the other line terminal (shall be repeated for each of three phases).

d) Single-phase source: single-phase short circuit on one phase at a time (applies to all single-phase transformers)

12.2.1.3 Tap connection for test

When the transformer is provided with taps in any winding, at least one test satisfying the asymmetrical current requirement shall be made on the tap connection that calculations predict will produce the most severe mechanical stresses. Extremes of the tap range, all taps out or all taps in, normally produce the most severe stresses, so tests on these connections are recommended. Tests on other taps, or connections in the case of dual voltage windings, may be made if required to ensure design adequacy.

Copyright © 1999 IEEE. All rights reserved.

Copyright The Institute of Electrical and Electronics Engineers, Inc.
Provided by IHS under license with IEEE
No reproduction or networking permitted without license from IHS
Not for Resale

12.2.2 Multiwinding transformers, including autotransformers

12.2.2.1 Fault location and type

The fault types and terminals to which they are to be applied shall be determined individually for each particular transformer. The maximum fault current for each winding shall be determined from calculations for the fault types specified in Clause 7 of IEEE Std C57.12.00-1993 by various fault types, fault locations, and applicable system data. During testing, each winding shall be subjected to its maximum calculated fault current on at least one test. In general, a given fault type and location will not produce the maximum fault current in more than one winding, so it will be necessary to make tests with several different connections to fully evaluate the capability of all windings. In order of preference, the tests may be conducted by either of the following methods:

a) Closing a breaker at the faulted terminal to apply a short circuit to the previously energized transformer.
b) Closing a breaker at the source terminal to apply energy to the previously short-circuited transformer.

12.3 Test requirements

12.3.1 Symmetrical current requirement, two-winding transformers

For two-winding transformers, the required value of symmetrical current for any test shall be determined from the equations in Clause 7 of IEEE Std C57.12.00-1993.

NOTE—For Categories I and II, calculate I_{sc} using transformer impedance only; except for Category I, the symmetrical current magnitude shall not exceed the values listed in 7.1.4.1 and Table 12 of IEEE Std C57.12.00-1993. For Categories III and IV, calculate I_{sc} using transformer plus system impedance.

See Clause 7 of IEEE Std C57.12.00-1993 for additional clarifying information on determining Z_S.

12.3.2 Symmetrical current requirement, multiwinding transformers and autotransformers

For multiwinding transformers and autotransformers, the required peak value of symmetrical current in each winding shall be determined by calculation based on applicable system conditions and fault types.

12.3.3 Asymmetrical current requirement

The required first cycle peak for asymmetrical current tests shall be calculated in accordance with the equations in Clause 7 of IEEE Std C57.12.00-1993.

12.3.4 Number of tests

Each phase of the transformer shall be subjected to a total of six tests satisfying the symmetrical current requirement specified in 12.3.1 or 12.3.2, as applicable. Two of these tests on each phase shall also satisfy the asymmetrical current requirements specified in 12.3.3.

12.3.5 Duration of tests

The duration of short-circuit tests shall be in accordance with Clause 7 of IEEE Std C57.12.00-1993.

Copyright © 1999 IEEE. All rights reserved.
Copyright The Institute of Electrical and Electronics Engineers, Inc.
Provided by IHS under license with IEEE
No reproduction or networking permitted without license from IHS
Not for Resale

12.4 Test procedure

12.4.1 Fault application

To produce the fully asymmetrical current wave specified in 12.3, a synchronous switch should be used to control the timing of fault application.

12.4.2 Calibration tests

Calibration tests to establish required source voltage or switch closing times should be made at voltage levels not greater than 50% of the value that would produce the specified symmetrical short-circuit current. For field testing, calibration tests should be made at reduced voltage levels, if possible. Tests with voltage equal to or greater than that required to produce 95% of the specified symmetrical short-circuit current may be counted toward fulfillment of the required number of tests.

12.4.3 Terminal voltage limits

When tests are to be made by applying the short circuit to the energized transformers, the no-load source voltage shall not exceed 110% of the rated tap voltage unless otherwise approved by the manufacturer.

Throughout the course of any test, the voltage at the transformer source terminals shall be maintained within a range of 95% to 105% of that necessary to produce the required symmetrical short-circuit current as determined in 12.3.1 or 12.3.2, as applicable.

12.4.4 Temperature limits

For liquid-filled transformers, the top liquid temperature at the start of the test shall be between 0 °C and 40 °C.

12.4.5 Current measurements

Current magnitudes shall be measured on the transformer terminals connected to the energy source. The symmetrical peak current shall be established as half of the peak-to-peak envelope of the current wave, measured at the midpoint of the second cycle of test current. When the transformer winding connected to the energy source is wye-connected, the first cycle peak asymmetrical current in each phase of the winding shall be measured directly from the oscillogram of terminal currents. When the transformer winding connected to the energy source is delta-connected, the first cycle peak asymmetrical current cannot be determined directly from terminal measurements at the source terminals. The following alternatives exist:

a) Measure first cycle peak asymmetrical current on oscillograms at the faulted terminals, when the faulted winding is wye-connected. Convert to source winding current by inverse turns ratio.
b) When all windings are delta-connected, connect metering accuracy current transformers (CT) having suitable current ratios inside the delta of the source winding and measure first cycle peak asymmetrical current from oscillograms obtained from these current transformers.
c) When all windings are delta-connected, determine only symmetrical current in the external lines and time fault application for the instant that would produce peak asymmetrical current in the required phase winding. (Close breaker at a time close to voltage zero for the given phase winding, with appropriate timing adjustment to account for the R/X ratio of the test system plus transformer.)

12.4.6 Tolerances on required current

The measured current, symmetrical or asymmetrical, in the tested phase or phases shall not be less than 95% of the required current, after the measured impedance variation is taken into account.

Copyright © 1999 IEEE. All rights reserved.

Copyright The Institute of Electrical and Electronics Engineers, Inc.
Provided by IHS under license with IEEE
No reproduction or networking permitted without license from IHS
Not for Resale

12.5 Proof of satisfactory performance

The transformer under test shall be judged to have performed satisfactorily when the visual inspection (12.5.1) and dielectric test (12.5.2) criteria have been satisfactorily met. In 12.5.3 through 12.5.6, recommended terminal measurements are listed that can be made during the course of the tests, but are not required to be made unless specified. When the terminal measurements are made and the requirements of 12.5.3 through 12.5.6 have been met following all tests, it is probable that the transformer has sustained no mechanical damage during the test. A composite evaluation of the degree to which all criteria of 12.5.3 through 12.5.6 have been met may indicate the need for a greater or lesser degree of visual inspection to confirm satisfactory performance. The evidence may be sufficient to permit a judgment of satisfactory performance to be made without complete dielectric tests. A decision to waive all or part(s) of the visual inspection or dielectric test criteria shall be based upon discussion and negotiation of all parties involved in specification and performance of short-circuit tests.

12.5.1 Visual inspection

Visual inspection of the core and coils shall give no indication that any change in mechanical condition has occurred that will impair the function of the transformer. The extent of the visual inspection shall be established on the basis of combined evidence obtained from the terminal measurements described in 12.5.3 through 12.5.6. When the terminal measurements give no indication of change in condition, external inspection of the core and coils removed from the tank may suffice. Any evidence of change in condition from more than one of the terminal measurements warrants disassembly of the windings from the core for a more detailed inspection.

12.5.2 Dielectric tests

The transformer shall withstand standard dielectric tests of IEEE Std C57.12.00-1993 at the full specification level following the short-circuit test series. Impulse tests shall be made following the short-circuit test series only when specified.

12.5.3 Waveshape of terminal voltage and current

No abrupt changes shall occur in the terminal voltage or short-circuit current wave shapes during any test.

12.5.4 Leakage impedance

Leakage impedance measured on a per-phase basis after the test series shall not differ from that measured before the test series by more than the following values:

— *Category I:* The allowable variation shall be a function of the transformer impedance Z_T as follows:

Z_T (per unit)	Percentage variation
0.0299 or less	22.5–500 Z_T
0.0300 or more	7.5

— *Categories II and III:* 7.5% allowable for noncircular concentric coils; 2% allowable variation for circular coils.
— *Category IV:* 2% allowable variation.

The measuring equipment shall have the demonstrated capability of giving reproducible readings within an accuracy of ± 0.2%.

Copyright © 1999 IEEE. All rights reserved.
Copyright The Institute of Electrical and Electronics Engineers, Inc.
Provided by IHS under license with IEEE
No reproduction or networking permitted without license from IHS
Not for Resale

12.5.5 Low-voltage impulse (LVI) tests

Comparison of oscilloscope traces of LVI current taken before and after each short circuit shall show no significant change in wave shape. Acceptable conditions and conditions requiring further investigation are defined in 12.5.5.1 and 12.5.5.2, respectively.

12.5.5.1 Acceptable conditions

a) No LVI trace change occurs during the complete test series.
b) Small changes of amplitude or phase angle occur following one of the short-circuit tests, but no further changes occur on subsequent tests.
c) Small changes of amplitude or phase angle occur following one of the short-circuit tests, but the trace returns to its original shape on subsequent tests.

12.5.5.2 Conditions requiring further investigation

a) Large LVI trace changes occur during the course of the test series.
b) Small changes of amplitude or phase angle occur after the first full amplitude short-circuit test, and these changes continue to grow with each subsequent test.

12.5.6 Excitation current

Excitation current measured after the test series shall not increase above that measured before the test series by more than 5% for stacked-type cores. For transformers with wound core construction, the increase shall not exceed 25%.

12.5.7 Other diagnostic measurements

Other diagnostic measurements may be made during the course of the tests to evaluate whether any sudden or progressive changes have occurred in the mechanical condition of the transformer. Such results may be useful to the understanding of the response to short-circuit forces, but they shall not form part of the proof criteria.

13. Audible sound emissions

13.1 General

13.1.1 Introduction

Audible sound from transformers originates principally in the transformer core and is transmitted, either through the dielectric fluid or the structural supports, to the outer shell or to other solid surfaces from which it is radiated as airborne sound. In some situations, the windings may be a noise source under rated load conditions, but this noise is not included in this standard. The frequency spectra of the audible sound consists primarily of the even harmonics of the power frequency; thus, for a 60 Hz power system, the audible sound spectra consists of tones at 120 Hz, 240 Hz, 360 Hz, 480 Hz, etc. The audible sound also contains the noise emitted by any dielectric fluid mechanical cooling system. Mechanical cooler sound consists of broadband fan noise, plus discrete tones at the fan blade passage frequency and its harmonics.

Copyright © 1999 IEEE. All rights reserved.

Copyright The Institute of Electrical and Electronics Engineers, Inc.
Provided by IHS under license with IEEE
No reproduction or networking permitted without license from IHS
Not for Resale

Described in this clause are methods for

— Measuring continuous transformer sound pressure levels in terms of A-weighted, one-third octave, or discrete frequency bands
— Rating transformer sound emissions
— Reporting the results in a standard manner

13.1.2 Applicability

The procedures specified for measuring transformer sound pressure levels or for calculating transformer sound power levels are intended to be applicable to transformers being tested in an indoor or outdoor laboratory or in a factory or to transformers that have been installed in substations, either single or in combination, with other equipment.

13.2 Instrumentation

13.2.1 Sound level meter

Sound pressure level measurements shall be made with instrumentation that meets the requirements of ANSI S1.4-1983 for Type 1 meters.

13.2.2 One-third octave filter

One-third octave band frequency measurements shall be made when specified with instrumentation that meets the requirements of ANSI S1.4-1983 for Type 1 meters together with ANSI S1.11-1986 for Type E, Class II performance, or their equal.

13.2.3 Narrow-band filter

Discrete frequency measurements may be made when specified or when ambient noise test conditions required by the specification cannot be attained. Analyzer bandwidth characteristics that may be suitable are 1/10 octave; a bandwidth of 10% of the selected frequency; or 3 Hz, 10 Hz, or 50 Hz bandwidths.

13.2.4 Wind screen

A suitable wind screen shall be used when measuring sound.

13.2.5 Calibration

Sound measuring instrumentation shall be calibrated as recommended by the sound level meter manufacturer before and after each set of measurements. Should the calibration change by more than one decibel, the measurements shall be declared invalid and the test repeated.

13.3 Test conditions

13.3.1 Environment

Measurements should be made in an environment having an ambient sound pressure level at least 5 dB below the combined sound pressure level of the transformer and the ambient sound pressure level. When the ambient sound pressure level is 5 dB or more below the combined level of transformer and ambient sound pressure level, the corrections shown in Table 8 shall be applied to the combined transformer and ambient sound pressure level to obtain the transformer sound pressure level. When the difference between the

Copyright © 1999 IEEE. All rights reserved.
Copyright The Institute of Electrical and Electronics Engineers, Inc.
Provided by IHS under license with IEEE
No reproduction or networking permitted without license from IHS
Not for Resale

combined ambient and the transformer sound pressure level and the ambient sound pressure level is less than 5 dB, and it is desired only to know the sound pressure level that the transformer does not exceed, a correction of –1.6 dB may be used. For one-third octave or narrow-band measurements, the 5 dB difference shall apply to each frequency band in which measurements are being made.

When ambient sound conditions do not comply, suitable corrections may be feasible when the ambient sound conditions are steady and discrete frequency sound levels are measured. For this condition, the details and methods for making the measurements and the ambient corrections shall be agreed upon by the manufacturer and the purchaser of the transformer.

Table 8—Ambient sound corrections

Difference, in decibels, between the combined transformer and ambient sound pressure level and the ambient sound pressure level	Correction, in decibels, to be added to the sound pressure level of the combined transformer and ambient level to obtain ambient-corrected sound pressure level of the transformer
5	–1.6
6	–1.3
7	–1.0
8	–0.8
9	–0.6
10	–0.4
over 10	0.0

13.3.2 Transformer location

The transformer shall be located so that no acoustically reflecting surface is within 3 m (9 ft) of the measuring microphone, other than the floor or ground. When a transformer is to be tested within a semi-reverberant facility, it should be located in an asymmetrical manner with respect to the room geometry. If the specified conditions cannot be met, the transformer shall be no closer than 3 m (9 ft) from a sound reflecting surface. When transformer sound emissions are measured in an enclosed space, sound reflections from walls or other large objects can influence the results because the sound contains discrete tones that are affected by room acoustics, room geometry, or reflecting objects. Thus, differences may exist in the sound measured in an indoor transformer installation and the sound measured in an acoustical laboratory or an outdoor installation.

13.3.3 Transformer operation

The transformer shall be connected and energized at rated voltage and rated frequency and shall be at no load with the tap changer, if any, on the principal tap. Pumps and fans shall be operated as appropriate for the rating being tested. When cooling equipment is not connected to the transformer, it should be so noted on the data sheet. When suitable cooling equipment sound emission data are available, the cooling equipment sound data may be appropriately added to the measured transformer sound if agreed to by the manufacturer and the purchaser. The addition of cooling equipment sound data to measured transformer sound data shall be clearly noted on the data sheet.

Copyright © 1999 IEEE. All rights reserved.

Copyright The Institute of Electrical and Electronics Engineers, Inc.
Provided by IHS under license with IEEE
No reproduction or networking permitted without license from IHS
Not for Resale

13.3.4 Tap changer

When the transformer is equipped with a tap changer, the transformer may on certain tap changer positions produce sound levels that are greater than the levels at the principal tap position. Sound measurements should be made with the transformer on the principal tap unless otherwise specified. The excitation shall be appropriate to the tap in use.

13.3.5 Operating conditions

Sound measurements shall begin after the transformer being tested is energized and steady-state sound level conditions are established. Measurements may be made immediately on transformers that have been in continuous operation.

13.3.6 Rated voltage

The rated voltage shall be measured line to line for delta-connected windings and line to neutral for wye-connected windings. The voltage shall be measured with a voltmeter responsive to the average value of the voltage but scaled to read the rms value of a sinusoidal wave having the same average value. The voltmeter should be connected between the terminals of the energized windings.

13.4 Microphone positions

13.4.1 Reference sound-producing surface

The reference sound-producing surface of a transformer is a vertical surface that follows the contour of a taut string stretched around the periphery of the transformer or integral enclosure (see Figure 29). The contour shall include radiators, coolers, tubes, switch compartments, and terminal chambers, but exclude bushings and minor extensions, such as valves, oil gauges, thermometers, conduit terminal boxes, and projections at or above cover height.

13.4.2 Safety considerations

In consideration of safety and consistency of measurement, the reference sound-producing surface near unenclosed live parts of field-assembled items, such as switches, switchgear, terminal compartments, wall-mounted bushings, and SF_6 air-to-oil adapter bushings, shall be moved outward from the taut string contour to be consistent with safe working clearances as determined by the manufacturer for the voltage class of the live parts involved.

13.4.3 First measurement position

The first microphone locations shall coincide with the main drain valve. Additional microphone locations shall be at 1 m (3 ft) intervals in a horizontal direction, proceeding clockwise as viewed from above along the measurement surface defined in this clause.

Copyright © 1999 IEEE. All rights reserved.
Copyright The Institute of Electrical and Electronics Engineers, Inc.
Provided by IHS under license with IEEE
No reproduction or networking permitted without license from IHS
Not for Resale

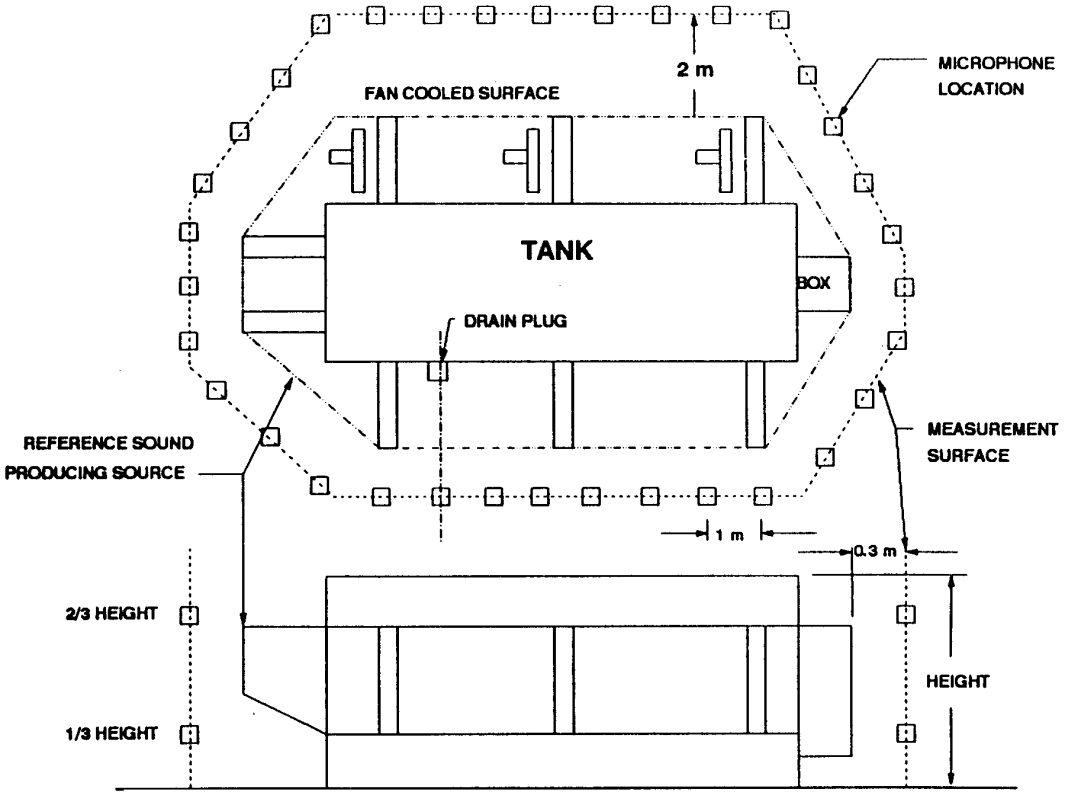

Figure 29—Microphone location for measuring audible sound from transformers

13.4.4 Number of microphone locations

No fewer than four microphone locations shall be used. Consequently, intervals of less than 1 m (3 ft) may result for small transformers. The microphone shall be located on the measurement surface. The microphone shall be spaced 0.3 m (1 ft) from the reference sound-producing surface. When fans are in operation, the microphone shall be located 2 m (6 ft) from any portion of the radiators, coolers, or cooling tubes cooled by forced air.

13.4.5 Height of microphone locations

For transformers having an overall tank or enclosure height of less than 2.4 m (7.2 ft), measurements shall be made at half height. For transformers having an overall tank or enclosure height of 2.4 m (7.2 ft) or more, measurements shall be made at one-third and at two-thirds height.

13.5 Sound power rating

The sound power rating of a transformer shall be determined using one of the three methods described in this clause. The sound power rating is determined using the following steps:

a) Measure ambient sound pressure levels.
b) Measure combined transformer and ambient sound pressure level.
c) Compute ambient corrected sound pressure levels.

Copyright © 1999 IEEE. All rights reserved.

Copyright The Institute of Electrical and Electronics Engineers, Inc.
Provided by IHS under license with IEEE
No reproduction or networking permitted without license from IHS
Not for Resale

d) Compute average sound pressure levels.

e) Calculate sound power levels.

13.5.1 Ambient sound pressure level

The ambient sound pressure level shall be established by averaging (see 13.5.4) the ambient sound pressure levels measured immediately preceding and immediately following the sound measurements with the transformer energized. The ambient sound shall be measured at a minimum of four locations, and the instruments shall be in conformance with 13.2. However, additional measurements may be made if agreed to by the manufacturer and user or if the ambient measurements vary by more than 3 dB around the transformer. At least one of the locations for measuring ambient sound pressure levels shall be on the center of each face of the measurement surface. Ambient sound pressure level corrections may be made at each microphone location before the average transformer sound pressure level is computed. Ambient sound pressure levels shall be measured using the same bandwidth (A-weighted, one-third octave, or discrete frequencies) that has been specified for measuring the transformer sound. The ambient sound corrections shall be made with the identical frequency bandwidths that are used to measure the combined transformer sound pressure levels and the ambient sound pressure levels.

13.5.2 Sound pressure level measurements

Transformer sound pressure levels shall be measured in conformance with 13.2, 13.3, and 13.4 using A-weighted sound level measurements. Further, one-third octave band sound level measurements or narrow-band sound level measurements may be made when specified. When specified, the sound pressure level shall also be measured using the sound level meter set to the C-weighting network. Discrete frequency sound emissions may be measured when agreed to by the purchaser and the vendor, or when ambient sound pressure levels required by this specification (see 13.3.1) for either the A-weighted or the one-third octave band sound level measurements cannot be attained.

13.5.2.1 A-weighted sound pressure level measurements

The A-weighted sound pressure level shall be measured with a sound level meter set to the A-weighted network.

13.5.2.2 One-third octave sound pressure level measurements

The one-third octave band sound pressure levels shall be measured at the midband frequencies of 63 Hz through 4000 Hz, inclusive.

13.5.2.3 Narrow-band sound pressure level measurements

Discrete frequency sound pressure levels shall be measured at the fundamental power frequency (60 Hz, for example) and at least at each of the next six even harmonics (120 Hz, 240 Hz, 360 Hz, 480 Hz, 600 Hz, and 720 Hz).

13.5.2.4 C-weighted sound pressure level measurements

The C-weighted sound pressure level shall be measured with a sound level meter set to the C-weighted network.

13.5.3 Ambient-corrected sound pressure levels

The ambient-corrected sound pressure level shall be computed using the procedure described in 13.3.1.

Copyright © 1999 IEEE. All rights reserved.
Copyright The Institute of Electrical and Electronics Engineers, Inc.
Provided by IHS under license with IEEE
No reproduction or networking permitted without license from IHS Not for Resale

13.5.4 Average sound pressure level (L_p)

The energy average transformer sound pressure level shall be computed by averaging the ambient-corrected sound pressure levels measured at each microphone location and for each frequency band (A-weighted, one-third octave band, or discrete frequency) using Equation (30).

$$L_{\mathrm{p}} = 10 \times \log_{10}\left\{\frac{1}{N}\sum_{i=1}^{N} 10^{(L_i/10)}\right\} \tag{30}$$

where

L_i is the sound pressure level measured at the ith location for the A-weighted sound level, for a one-third octave frequency band, or for a discrete frequency,
N is the total number of sound measurements.

The arithmetic mean of the measured sound pressure levels may be used to determine the average transformer sound pressure level when the variation of the measured levels is 3 dB or less or when an approximate value of the average transformer sound level is desired.

13.5.5 Sound power level calculation (L_w)

The sound power level shall be computed for each frequency band (A-weighted, one-third octave band, or discrete frequency) using Equation (31).

$$L_{\mathrm{w}} = L_{\mathrm{p}} + 10 \times \log_{10}(S) \tag{31}$$

The measurement surface area S is the vertical area [in square meters (square feet)] enveloping the transformer (measurement surface) on which the sound measurement points are located plus the horizontal area bounded by the vertical measurement surface.

Alternatively, for large transformers the measurement surface area is approximately equal to 125% of the vertical area enveloping the transformer (measurement surface).

13.5.6 Computation of A-weighted sound power level

A transformer A-weighted sound power level shall be computed using the procedures in 13.5.6.1 and 13.5.6.2 when the A-weighted sound level is not measured.

13.5.6.1 One-third octave sound pressure

When a transformer sound power level has been computed using one-third octave sound pressure measurements (see Table 10), the A-weighted sound power level can be computed using Equation (32).

$$L_{\mathrm{w}}(A) = 10 \times \log_{10}\left\{\sum_{j=1}^{19} 10^{((L_{\mathrm{w}}(f_j)+K_j)/10)}\right\} \tag{32}$$

where

$L_{\mathrm{w}}(f_j)$ is the sound power level in the f_j third octave frequency band,
K_j is the A-weighted correction for the jth frequency band (see Table 9).

Copyright © 1999 IEEE. All rights reserved.

Copyright The Institute of Electrical and Electronics Engineers, Inc.
Provided by IHS under license with IEEE
No reproduction or networking permitted without license from IHS
Not for Resale

Table 9—A-weighted frequency corrections for one-third octave band sound levels

A-weighted frequency correction for one-third octave band sound levels	Corrections (K_j) (dB)
63	–26.2
80	–22.5
100	–19.1
125	–16.1
160	–13.4
200	–10.9
250	–8.6
315	–6.6
400	–4.8
500	–3.2
630	–1.9
800	–0.8
1000	0.0
1250	–0.6
1600	–1.0
2000	–1.2
2500	–1.3
3150	–1.2
4000	–1.0

13.5.6.2 Discrete frequencies

When a transformer sound power level has been computed using discrete frequencies (see Table 14), the estimated core/tank A-weighted sound power level shall be computed using Equation (33).

$$L_w(A) = (10 \times \log_{10})\left\{ \sum_{k=1}^{7} 10^{((L_w(f_k) + K_k)/10)} \right\} \quad (33)$$

where

$L_w(A)$ is the estimated A-weighted sound power level,
f_k is the seven discrete frequencies for measuring transformer sound,
K_k is the discrete frequency correction from Table 10.

Discrete frequency measurements shall be used only for estimating transformer core/tank sound ratings, because the sound is not measured over the entire audible frequency spectra.

Copyright © 1999 IEEE. All rights reserved.
Copyright The Institute of Electrical and Electronics Engineers, Inc.
Provided by IHS under license with IEEE
No reproduction or networking permitted without license from IHS
Not for Resale

Table 10—A-weighted frequency corrections for discrete frequency sound levels

Discrete frequency (f_k) (Hz)	Correction (K_k)
60	–26.9
120	–16.6
240	–9.1
360	–5.6
480	–3.5
600	–2.2
720	–1.1

13.6 Presentation of results

Reports describing transformer sound ratings shall include, as a minimum, the following data and Figure 30, Figure 31, Figure 32, Figure 33, and Figure 34, as applicable:

a) A statement that the measurements were made and reported as described in this document.
b) A detailed description of all deviations from this test code.
c) A description of the transformer being tested, including rated power, voltage, voltage ratio, and connections.
d) Measured voltage at the start of the sound tests.
e) The name of the transformer manufacturer, the location of manufacturer, the transformer type and serial number, the date and time of the test, and the name of the engineer approving the test.
f) A description of the sound measuring instruments, the microphone, and the calibration method, including the following information for the sound measuring instruments: manufacturer, model, serial number, and calibration source.
g) A description of the test environment, including a dimensioned sketch showing the position of the transformer with respect to other objects, and the location of the measuring surface, the microphone positions, and sound reflecting or absorbing surfaces.
h) The descriptor specified by the user and manufacturer for measuring one of the following sound pressure levels:
    1) A-weighted sound pressure level.
    2) One-third octave band sound pressure level.
    3) Narrow-band sound level.
i) Transformer plus ambient sound pressure level measured at each location and the average sound pressure level.
j) Ambient sound pressure levels measured at each location.
k) Sound levels measured for any of the following operating conditions with the condition that is measured clearly described in the report:
    1) Transformer fully equipped with its auxiliaries in service.
    2) Transformer fully equipped with its auxiliaries not in service.
    3) Cooling equipment in service with transformer not energized.

--`,,`-`-`,,`,,`,`,,`---
Copyright © 1999 IEEE. All rights reserved.

Copyright The Institute of Electrical and Electronics Engineers, Inc.
Provided by IHS under license with IEEE
No reproduction or networking permitted without license from IHS
Not for Resale

l) Average A-weighted transformer sound pressure levels corrected for background noise conditions and, when specified, the one-third octave band sound pressure levels or the narrow band sound pressure levels.

m) The measurement surface area and the distance between the measurement microphone locations and the transformer.

n) The A-weighted sound power level of the transformer and, when specified, the one-third octave band sound power level.

Sound level data shall be rounded to the nearest whole decibel with decimal values of 0.5 and above being rounded to the next higher integer.

14. Calculated data

14.1 Reference temperature

The reference temperature for determining total losses, voltage regulation, and efficiency shall be equal to the sum of the rated average winding temperature rise by resistance plus 20 °C.

14.2 Losses and excitation current

14.2.1 Determination of no-load losses and exciting current

No-load losses and exciting current shall be determined for the rated voltage and frequency on a sine-wave basis unless a different form is inherent in the operation of the transformer.

14.2.2 Load losses

Load losses shall be determined for rated voltage, current, and frequency and shall be corrected to the reference temperature.

14.2.3 Total losses

Total losses are the sum of the no-load losses and the load losses.

14.3 Efficiency

The efficiency of a transformer is the ratio of its useful power output to its total power input.

$$\eta = \frac{P_o}{P_i} = \frac{P_i - P_L}{P_i} = 1 - \frac{P_L}{P_i} = 1 - \frac{P_L}{P_o + P_L} \quad (34)$$

where

η is efficiency,
P_o is output,
P_i is input,
P_L is losses.

Copyright © 1999 IEEE. All rights reserved.
Copyright The Institute of Electrical and Electronics Engineers, Inc.
Provided by IHS under license with IEEE
No reproduction or networking permitted without license from IHS
Not for Resale

When specified, efficiency shall be calculated on the basis of the reference temperature for the average winding temperature rise of the transformer.

Test No. _____

1. Transformer description

   a) Manufacturer: _____
   b) Type: _____ Serial #:_____
   c) Dimensions (m):_____× _____×_____ Measurement area (square km): _____
   d) Tapping range: _____
   e) Test date: ___/___/___ Time: _____ Engineer: _____

2. Transformer operating characteristics

   a) Rating MVA: _____
   b) Measured voltage: _____ Primary: _____ Secondary:_____ Ratio:_____
   c) Connection: _____ Tap position:_____
   d) Transformer description: _____
      _____
   e) Transformer condition (check one):
      _____ Fully operational with all auxiliaries in service.
      _____ Fully operational without auxiliaries in service.
      _____ Cooling equipment in service and transformer unenergized.
      _____ Other (describe):_____

3. Sound measuring instruments

Instrument	Manufacturer	Type	Number
Sound level meter:			
Microphone:			
Calibrator:			
Filter or Analyzer:			
Others:			

4. Deviation from standard (describe):_____
   _____
   _____

5. Test environment

   Use back of sheet for sketch of test environment and transformer and microphone locations.

6. Sound rating

   a) A-weighted sound pressure level:_____ dB(A)
   b) A-weighted sound power level: _____ dB(A), re: 10^{-12} watt

Date: _____ Approved _____

Figure 30—Data sheet for audible sound test
Test No. _____

Copyright © 1999 IEEE. All rights reserved.

Copyright The Institute of Electrical and Electronics Engineers, Inc.
Provided by IHS under license with IEEE
No reproduction or networking permitted without license from IHS
Not for Resale

A-weighted transformer sound pressure level, dB(A)				
Microphone		Ambient transformer sound pressure level (dBA)	Ambient sound level* (dBA)	Corrected A-weighted sound pressure level (dBA)
#	Height (m)			
1				
2				
3				
4				
5				
6				
7				
8				
9				
10				
11				
12				
13				
14				
15				
16				
17				
18				
19				
20				
21				
22				
23				
24				
25				
26				

A-weighted ambient level		
Microphone		Measured ambient level (dBA)
#	Height (m)	
A		
B		
C		
D		
E		
F		
G		
H		

*Use average ambient sound level to compute ambient corrected transformer sound level.

Average A-weighted sound pressure level: _____ dBA
A-weighted sound power level: _____ dBA, re 10^{-12} W

Figure 31—A-weighted sound power calculation
Test No. _____

Copyright © 1999 IEEE. All rights reserved.
Copyright The Institute of Electrical and Electronics Engineers, Inc.
Provided by IHS under license with IEEE
No reproduction or networking permitted without license from IHS
Not for Resale

One-third octave frequency (Hz)	Measured ambient plus transformer sound pressure level (dB)																				Measured ambient sound pressure level								
	Microphone location																				Microphone location								
	1	2	3	4	5	6	7	8	9	10	11	12	13	14	15	16	17	18	19	20	A	B	C	D	E	F	G	H	Average*
63																													
80																													
100																													
125																													
160																													
200																													
250																													
315																													
400																													
500																													
630																													
800																													
1000																													
1250																													
1600																													
2000																													
2500																													
3150																													
4000																													
Height (m)																					XXXXXXXXXXXXXXXXXXXX								XXXXX
A-weighted C-weighted																													

*Use average ambient sound level to compute ambient corrected transformer sound level.

Figure 32—One-third octave sound power calculation Test No._____

Copyright © 1999 IEEE. All rights reserved.
Copyright The Institute of Electrical and Electronics Engineers, Inc.
Provided by IHS under license with IEEE
No reproduction or networking permitted without license from IHS
Not for Resale

One-third octave frequency (Hz)	Ambient corrected transformer sound pressure level (dB)																				Average sound pressure level (dB)	Sound power level (dB)
	Microphone location																					
	1	2	3	4	5	6	7	8	9	10	11	12	13	14	15	16	17	18	19	20		
63																						
80																						
100																						
125																						
160																						
200																						
250																						
315																						
400																						
500																						
630																						
800																						
1000																						
1250																						
1600																						
2000																						
2500																						
3150																						
4000																						
A-weighted C-weighted																						

Average A-weighted sound pressure level: _____ dB(A)
A-weighted sound pressure level: _____ dB(A), re: 10^{-12} W

Figure 33—One-third octave sound power level calculation Test No._____

Copyright The Institute of Electrical and Electronics Engineers, Inc.
Provided by IHS under license with IEEE
No reproduction or networking permitted without license from IHS

Not for Resale

Copyright © 1999 IEEE. All rights reserved.

Microphone		Measured ambient plus transformer sound pressure level (dB)						
		Frequency (Hz)						
Location	Height (m)	60	120	240	360	480	600	720
1								
2								
3								
4								
5								
6								
7								
8								
9								
10								
11								
12								
13								
14								
15								
16								
17								
18								
19								
20								

Ambient corrected transformer sound pressure level (dB)						
Frequency (Hz)						
60	120	240	360	480	600	720

Measured ambient sound pressure level (dB)								
		Frequency (Hz)						
Location	Height (m)	60	120	240	360	480	600	720
A								
B								
C								
D								
E								
F								
Average*								

Average sound pressure level (dB)							
Frequency (Hz)							Estimated A-weighted
60	120	240	360	480	600	720	

*Use average ambient sound level to compute ambient corrected transformer sound level.

A-weighted sound pressure level: _____dB(A).
A-weighted sound power level: _____ dB(A), re: 10^{-12} W.

Figure 34—Discrete frequency sound power calculation Test No._____

Copyright © 1999 IEEE. All rights reserved.
Copyright The Institute of Electrical and Electronics Engineers, Inc.
Provided by IHS under license with IEEE
No reproduction or networking permitted without license from IHS
Not for Resale

14.4 Voltage regulation of a constant-voltage transformer

14.4.1 General

The voltage regulation of a constant-voltage transformer is defined in IEEE Std C57.12.80-1978. The regulation may be expressed in percentage (or per unit) on the basis of the rated secondary voltage at full load.

14.4.2 Reference temperature

When specified, voltage regulation calculations shall be based on the reference temperature of 14.1.

14.4.3 Load loss watts and impedance volts

The load loss watts and impedance volts for use in the computation of voltage regulation are those that result from the measurement of the factors given in 9.2 corrected to reference temperature as shown in 9.4.

14.4.4 Voltage regulation computation, two-winding transformers

When specified, the voltage regulation shall be computed according to 14.4.4.1 through 14.4.4.3.

14.4.4.1 Exact formulae for the calculation of regulation

The exact formulae for calculating regulaiton are as follows:

a) When the load is lagging: $\text{reg} = \sqrt{(R + F_\text{p})^2 + (X + q)^2} - 1$

b) When the load is leading: $\text{reg} = \sqrt{(R + F_\text{p})^2 + (X - q)^2} - 1$ (35)

where

F_p is power factor of load,

q is $+\sqrt{1 - F_\text{p}^2}$,

R is resistance factor of transformer = $\dfrac{\text{load loss in kilowatts}}{\text{rated kilovoltamperes}}$,

X is reactance factor of transformer = $+\sqrt{Z^2 - R^2}$,

Z is impedance factor of transformer = $\dfrac{\text{impedance kilovoltamperes}}{\text{rated kilovoltamperes}}$.

The quantities F_p, q, R, X, and Z are on a per-unit basis, so the result shall be multiplied by 100 to obtain the regulation in percentage.

14.4.4.2 General expression for calculation of transformer regulation

A general expression for the calculation of transformer regulation that permits calculations to any degree of precision justified by the supporting data is Equation (36).

$$\text{reg} = a - \frac{1}{2}a^2 + \frac{1}{2}a^3 - \frac{5}{8}a^4 + \frac{7}{8}a^5 - \frac{21}{16}a^6 + \frac{33}{16}a^7 \quad (36)$$

Copyright © 1999 IEEE. All rights reserved.
Copyright The Institute of Electrical and Electronics Engineers, Inc.
Provided by IHS under license with IEEE
No reproduction or networking permitted without license from IHS
Not for Resale

where

reg is the regulation on a per-unit basis,
a is a quantity depending upon the angle and magnitude of the transformer impedance, the power factor of the load, and the number of windings in the transformer.

The quantity *a* for the calculation of the per-unit regulation of a two-winding transformer is determined by Equation (37).

$$a = Z\cos(\phi + \theta) + \frac{Z^2}{2} \tag{37}$$

where

R is resistance factor of transformer = $\frac{\text{load loss in kilowatts}}{\text{rated kilovoltamperes}}$,

Z is impedance factor of transformer = $\frac{\text{impedance kilovoltamperes}}{\text{rated kilovoltamperes}}$,

X is reactance factor of transformer = $+\sqrt{Z^2 - R^2}$,

ϕ is the impedance angle of transformer impedance,

$\cos\phi$ is R/Z,

F_p is the power factor of load $\cos\phi$,

θ is the phase angle of load current; positive for leading current, negative for lagging current.

14.4.4.3 Three-phase to two-phase transformers

For the calculation of the regulation for three-phase to two-phase transformation, proceed as follows:

a) For the per-unit regulation of main phase, use the impedance of the main transformer for substitution in the formula selected for use.
b) For the per-unit regulation of the teaser phase, use the sum of the impedance of the teaser transformer plus the interlacing impedance of the main transformer for substitution in the formula selected for use.
c) To determine the interlacing impedance, connect the two ends of the three-phase winding of the main transformer together and impress between this common connection and the 50% tap a voltage sufficient to pass three-phase line current in the supply lines.
d) The voltage thus determined is the interlacing impedance voltage and is to be put on a per-unit basis by reference to the rated voltage of the teaser transformer on the 86.6% tap.

15. Certified test data

The minimum information listed in this clause shall be included in certified test data.

a) *Order data*
   1) Purchaser
   2) Purchaser's order number
   3) Manufacturer's production order number and serial number

Copyright © 1999 IEEE. All rights reserved.

Copyright The Institute of Electrical and Electronics Engineers, Inc.
Provided by IHS under license with IEEE
No reproduction or networking permitted without license from IHS
Not for Resale

b) Rating data

1) Type (power, auto, grounding, etc.)
2) Type of construction (core form or shell form) *
3) Cooling Class
4) Number of phases
5) Connections (delta, wye, zigzag, etc.)
6) Polarity for single phase transformers
7) Frequency *
8) Insulation medium (oil, silicone, etc.) *
9) Temperature rise *
10) Winding ratings: voltage, voltampere, BIL, all temperature rise ratings specified, including future ratings *
11) Harmonic factor if other than standard *

c) *Test and calculated data* (by individual serial number; if the results are from another transformer "design" tested, provide serial number, kV and kVA ratings, and date of the test.)

1) Date of test
2) Winding resistances (when required)
3) Losses: no-load, load, auxiliary and total
4) Impedance(s) in %
5) Excitation current in %
6) Thermal performance data **
    i) Ambient temperature
    ii) Tap position, total loss, and line currents for total loss runs
    iii) Oil flow in winding (directed or nondirected)
    iv) Final bottom and top oil temperature rise over ambient for total loss run for each test
    v) Average winding temperature rise over ambient for each winding for each test
    vi) Calculated winding hottest spot temperature rise over ambient for maximum rating
7) Zero-sequence impedance (when specified) *
8) Regulation (calculated when specified)
9) Applied voltage test values for each winding *
10) Induced voltage test value, including measured PD values when required *
11) Impulse test data per IEEE Std C57.98-1993 (when required or specified) *
12) Switching impulse test data (when specified) *
13) Sound level test results (when specified) *
14) Short-circuit test results (when specified) *
15) Ratio test results *
16) Phase relation or polarity test results *
17) Other special test results (when specified) *

d) Certification statement and approval

NOTE 1—Items identified with * are not required for distribution transformers unless specified by the user.

NOTE 2—Number of significant figures of reported data should reflect the level of confidence of the data accuracy.

Copyright © 1999 IEEE. All rights reserved.
Copyright The Institute of Electrical and Electronics Engineers, Inc.
Provided by IHS under license with IEEE
No reproduction or networking permitted without license from IHS
Not for Resale

NOTE 3—All temperature sensitive data should be reported after correcting to reference temperature (defined in 14.1) except no-load losses (see 8.4).

NOTE 4—Other significant information, such as tap position during induced potential test, test connection used, and any particular method used when alternatives are allowed in the test code, should be included.

NOTE 5—Other drawings, such as nameplate and outline, may be made a part of certified test data in place of duplicating the same information.

NOTE 6—Items identified with ** are not required for distribution transformers 2500 kVA and smaller, unless specified by the user.

Copyright © 1999 IEEE. All rights reserved.

Copyright The Institute of Electrical and Electronics Engineers, Inc.
Provided by IHS under license with IEEE
No reproduction or networking permitted without license from IHS Not for Resale

Annex A

(informative)

Bibliography

[B1] ASTM D117-96, Methods of Testing Electrical Insulating Oils.[7]

[B2] ASTM D877-1995, Method of Test for Dielectric Breakdown Voltage of Insulating Liquids using Disk Electrodes.

[B3] ASTM D1816-1997, Method of Test for Dielectric Breakdown Voltage of Insulating Oils of Petroleum Origin using VDE Electrodes.

[B4] Hemmers, R. T., and Graham, D. C., "Measurement of self-cooled transformer sound levels in relatively high ambients," *IEEE Transactions on Power Apparatus and Systems,* vol. PAS-89, no. 7, pp. 1657-1662, Sept./Oct. 1970.

[B5] IEEE Std 454-1973, IEEE Recommended Practice for Detection and Measurement of Partial Discharges (corona) During Dielectric Tests (withdrawn).[8]

[7]ASTM publications are available from the American Society for Testing and Materials, 100 Barr Harbor Drive, West Conshohocken, PA 19428-2959, USA (http://www.astm.org/).

[8]IEEE Std 454-1973 has been withdrawn; however, copies can be obtained from Global Engineering, 15 Inverness Way East, Englewood, CO 80112-5704, USA, tel. (303) 792-2181 (http://www.global.ihs.com/).

Copyright © 1999 IEEE. All rights reserved.
Copyright The Institute of Electrical and Electronics Engineers, Inc.
Provided by IHS under license with IEEE
No reproduction or networking permitted without license from IHS
Not for Resale