IEEE Std C57.12.70-2000
(Revision of
IEEE Std C57.12.70-1978)

IEEE Standard Terminal Markings and Connections for Distribution and Power Transformers

Transformers Committee
of the
IEEE Power Engineering Society

Approved 7 December 2000

IEEE-SA Standards Board

Abstract: Standard terminal markings and connections are described for single-phase and three-phase distribution, power, and regulating transformers. For terminal markings, it covers sequence designation, external terminal designation, neutral terminal designation, grounded terminal designation, and marking of full and tap winding terminals. Additive and subtractive polarity and parallel transformer operation are described. Connections of single-phase transformers in various configurations and angular displacement of three-phase transformers to connect to various system phase displacements are covered.
Keywords: transformer connections, transformer terminals, transformer polarity

---

The Institute of Electrical and Electronics Engineers, Inc.
3 Park Avenue, New York, NY 10016-5997, USA

Copyright © 2001 by the Institute of Electrical and Electronics Engineers, Inc.
All rights reserved. Published 16 March 2001. Printed in the United States of America.

Print: ISBN 0-7381-2732-9 SH94906
PDF: ISBN 0-7381-2733-7 SS94906

No part of this publication may be reproduced in any form, in an electronic retrieval system or otherwise, without the prior written permission of the publisher.

Copyright The Institute of Electrical and Electronics Engineers, Inc.
Provided by IHS under license with IEEE
No reproduction or networking permitted without license from IHS
Not for Resale

IEEE Standards documents are developed within the IEEE Societies and the Standards Coordinating Committees of the IEEE Standards Association (IEEE-SA) Standards Board. Members of the committees serve voluntarily and without compensation. They are not necessarily members of the Institute. The standards developed within IEEE represent a consensus of the broad expertise on the subject within the Institute as well as those activities outside of IEEE that have expressed an interest in participating in the development of the standard.

Use of an IEEE Standard is wholly voluntary. The existence of an IEEE Standard does not imply that there are no other ways to produce, test, measure, purchase, market, or provide other goods and services related to the scope of the IEEE Standard. Furthermore, the viewpoint expressed at the time a standard is approved and issued is subject to change brought about through developments in the state of the art and comments received from users of the standard. Every IEEE Standard is subjected to review at least every five years for revision or reaffirmation. When a document is more than five years old and has not been reaffirmed, it is reasonable to conclude that its contents, although still of some value, do not wholly reflect the present state of the art. Users are cautioned to check to determine that they have the latest edition of any IEEE Standard.

Comments for revision of IEEE Standards are welcome from any interested party, regardless of membership affiliation with IEEE. Suggestions for changes in documents should be in the form of a proposed change of text, together with appropriate supporting comments.

Interpretations: Occasionally questions may arise regarding the meaning of portions of standards as they relate to specific applications. When the need for interpretations is brought to the attention of IEEE, the Institute will initiate action to prepare appropriate responses. Since IEEE Standards represent a consensus of all concerned interests, it is important to ensure that any interpretation has also received the concurrence of a balance of interests. For this reason, IEEE and the members of its societies and Standards Coordinating Committees are not able to provide an instant response to interpretation requests except in those cases where the matter has previously received formal consideration.

Comments on standards and requests for interpretations should be addressed to:

Secretary, IEEE-SA Standards Board
445 Hoes Lane
P.O. Box 1331
Piscataway, NJ 08855-1331
USA

Note: Attention is called to the possibility that implementation of this standard may require use of subject matter covered by patent rights. By publication of this standard, no position is taken with respect to the existence or validity of any patent rights in connection therewith. The IEEE shall not be responsible for identifying patents for which a license may be required by an IEEE standard or for conducting inquiries into the legal validity or scope of those patents that are brought to its attention.

IEEE is the sole entity that may authorize the use of certification marks, trademarks, or other designations to indicate compliance with the materials set forth herein.

Authorization to photocopy portions of any individual standard for internal or personal use is granted by the Institute of Electrical and Electronics Engineers, Inc., provided that the appropriate fee is paid to Copyright Clearance Center. To arrange for payment of licensing fee, please contact Copyright Clearance Center, Customer Service, 222 Rosewood Drive, Danvers, MA 01923 USA; (978) 750-8400. Permission to photocopy portions of any individual standard for educational classroom use can also be obtained through the Copyright Clearance Center.

Copyright The Institute of Electrical and Electronics Engineers, Inc.
Provided by IHS under license with IEEE
No reproduction or networking permitted without license from IHS
Not for Resale

Introduction

(This introduction is not a part of IEEE Std C57.12.70-2000, IEEE Standard Terminal Markings and Connections for Distribution and Power Transformers.)

The Terminology, Units, and Terminal Markings Working Group of the IEEE Transformers Committee was formed in January 1995. One of its two projects was to review and update this standard, which was last issued by ANSI in 1978.

The purpose of IEEE Std C57.12.70-1998 is to specify standard terminal markings and connections for distribution and power transformers.

The content of this revision of IEEE Std C57.12.70-1998, compared to the 1978 version, is very similar. The major effort of the Working Group was to reorganize the standard to comply with the approved style of currently published IEEE standards, to update reference standards, and to add terminal marking requirements for padmounted compartmental transformers.

At the time the revision of this standard was completed, the Working Group on Terminology, Units and Terminal Markings had the following membership:

Thomas P. Traub, *Chair*

Wallace B. Binder	John W. Matthews	Thomas A. Prevost
Robert L. Grubb	B. K. Patel	F. N. Young

Copyright © 2001 IEEE. All rights reserved.

Copyright The Institute of Electrical and Electronics Engineers, Inc.
Provided by IHS under license with IEEE
No reproduction or networking permitted without license from IHS
Not for Resale

The following persons were on the balloting committee:

Dennis J. Allan
George Allen
Raymond Allustiarti
Glenn Andersen
Stephen Antosz
Jim Antweiler
Jim C. Arnold
Roy A. Bancroft
Ron L. Barker
Edward A. Bertolini
Wallace B. Binder
William E. Boettger
Joe V. Bonucchi
John D. Borst
Don Chu
Jerry L. Corkran
Dan W. Crofts
John A. Ebert
Fred E. Elliott
Joe Foldi
Ron Fox
Dudley L. Galloway
Harry D. Gianakouros
Ramsis S. Girgis
Richard D. Graham
Robert L. Grubb
Robert L. Grunert
Michael E. Haas
Geoff H. Hall
N Wayne Hansen
James H. Harlow
William R. Henning
Philip J. Hopkinson
James D. Huddleston, III
John O. Hunt
Virendra Jhonsa
Anthony J. Jonnatti
Lars-Erik Juhlin
Brian Klaponski
Egon Koenig
Barin Kumar
John G. Lackey
Tim D. Lewis
Harold F. Light
Larry A. Lowdermilk
Donald L. Lowe
Joe D. MacDonald
William A. Maguire
John W. Matthews
Jack W. McGill
Charles Patrick McShane
R. E. Minkwitz, Sr.
Harold R. Moore
W. E. Morehart
Daniel H. Mulkey
Charles R. Murray
R. J. Musil
William H. Mutschler, Jr.
Carl G. Niemann
Larry Nunnery
Paul E. Orehek
Dennis Orten
Dhiru S. Patel
B. K. Patel
Wesley F. Patterson
Dave Payne
Paulette A. Payne
Thomas J. Pekarek
Dan D. Perco
Mark D. Perkins
Linden W. Pierce
R Leon Plaster
Donald W. Platts
Jeewan L. Puri
Pierre Riffon
Peter G. Risse
Arlise L. Robinson, Jr.
John R. Rossetti
Mahesh P. Sampat
Vallamkonda Sankar
Leo J. Savio
Rick Sawyer
Wes W. Schwartz
Pat Scully
Dilipkumar Shah
Devki Sharma
Vic Shenoy
Hyeong Jin Sim
Tarkeshwar Singh
Leonard R. Smith
Stephen D. Smith
J. Ed Smith
James E. Smith
Jerry W. Smith
Steven L. Snyder
Ronald J. Stahara
L.R. Stensland
John C. Sullivan
James A. Thompson
Thomas P. Traub
Al Traut
Subhash C. Tuli
Georges H. Vaillancourt
Robert A. Veitch
Loren B. Wagenaar
Ralph D. Wakeam
Barry H. Ward
Robert Whearty
A. L. Wilks
William G. Wimmer
W. E.Wrenn
F. N. Young

When the IEEE-SA Standards Board approved this standard on 7 December 2000, it had the following membership:

Donald N. Heirman, *Chair*
James T. Carlo, *Vice Chair*
Judith Gorman, *Secretary*

Satish K. Aggarwal
Mark D. Bowman
Gary R. Engmann
Harold E. Epstein
H. Landis Floyd
Jay Forster*
Howard M. Frazier
Ruben D. Garzon
James H. Gurney
Richard J. Holleman
Lowell G. Johnson
Robert J. Kennelly
Joseph L. Koepfinger*
Peter H. Lips
L. Bruce McClung
Daleep C. Mohla
James W. Moore
Robert F. Munzner
Ronald C. Petersen
Gerald H. Peterson
John B. Posey
Gary S. Robinson
Akio Tojo
Donald W. Zipse

*Member Emeritus

Also included is the following nonvoting IEEE-SA Standards Board liaison:

Alan Cookson, *NIST Representative*
Donald R. Volzka, *TAB Representative*

Noelle D. Humenick
IEEE Standards Project Editor

Copyright © 2001 IEEE. All rights reserved.

Copyright The Institute of Electrical and Electronics Engineers, Inc.
Provided by IHS under license with IEEE
No reproduction or networking permitted without license from IHS
Not for Resale

Contents

1. Overview 1

1.1 Scope 1
1.2 References 1

2. Marking of terminals and identification of windings 3

2.1 General 3
2.2 Sequence designation 3
2.3 External terminal designation 3
2.4 Neutral terminal designation 3
2.5 Grounded terminal designation 3

3. Single-phase transformers 3

3.1 Types of transformers 4
3.2 Subtractive and additive polarity 5
3.3 Order of numbering terminals of any winding 11
3.4 Order of numbering terminals of different windings 11
3.5 Location of H1 terminal 12
3.6 Parallel operation 12

4. Angular displacement and connections for single-phase transformers in three-phase and six-phase banks 13

5. Phase relationships and terminal markings for three-phase transformers 17

5.1 Relation between highest voltage winding and other windings 17
5.2 Phase relationships and terminal markings 19
5.3 Marking of full winding terminals 19
5.4 Tap leads 20
5.5 Location of external terminals 21
5.6 Interphase connections made outside of case 23
5.7 Parallel operation 23

6. Terminal markings for three-phase to six-phase transformers 23

6.1 General 23
6.2 Marking of full winding terminals 23
6.3 Relation between three-phase and six-phase windings 24
6.4 Tap leads 24

7. Use of transformers with standard voltage diagrams in connecting systems of various phase displacements 25

7.1 General 25
7.2 0° phase displacement: Δ-Δ or Y-Y 26
7.3 30° lagging phase displacement: Δ-Y or Y-Δ 26
7.4 30° leading phase displacement: Δ-Y or Y-Δ 26
7.5 Summary of preceding examples 27

Copyright © 2001 IEEE. All rights reserved.

Copyright The Institute of Electrical and Electronics Engineers, Inc.
Provided by IHS under license with IEEE
No reproduction or networking permitted without license from IHS
Not for Resale

Copyright © 2001 IEEE. All rights reserved.

--`,,`-`-`,,`,,`,`,,`---

Copyright The Institute of Electrical and Electronics Engineers, Inc.
Provided by IHS under license with IEEE
No reproduction or networking permitted without license from IHS

Not for Resale

IEEE Standard Terminal Markings and Connections for Distribution and Power Transformers

1. Overview

1.1 Scope

This standard describes the terminal markings and connections for distribution, power, and regulating transformers covered in the C57 series of IEEE and ANSI standards, guides, and recommended practices.

1.2 References

When the following standards are superseded by a revision, the revision shall apply:

ANSI C57.12.10-1988, American National Standard for Transformers—230 kV and Below 833/958 through 8333/10 417 kVA, Single-Phase, and 750/862 through 60 000/80 000/100 000 kVA, Three-Phase without Load Tap Changing; and 3750/4687 through 60 000/80 000/100 000 kVA with Load Tap Changing—Safety Requirements.[1]

ANSI C57.12.20-1997, American National Standard for Overhead Distribution Transformers, 500 kVA and Smaller: High Voltage, 34 500 Volts and below: Low Voltage, 7970/13 800 Y Volts and below—Requirements.

ANSI C57.12.22-1989, American National Standard for Transformers—Pad-Mounted, Compartmental-Type, Self-Cooled, Three-Phase Distribution Transformers with High-Voltage Bushings, 2500 kVA and Smaller: High-Voltage, 34 500 GrdY/19 920 Volts and Below; Low Voltage, 480 Volts and Below—Requirements.

ANSI C57.12.24-1992, American National Standard for Transformers--Underground-Type Three-Phase Distribution Transformers, 2500 kVA and Smaller; High Voltage, 34 500 GrdY/19 920 Volts and Below; Low Voltage, 480 Volts and Below—Requirements.[2]

---

[1]ANSI publications are available from the Sales Department, American National Standards Institute, 11 West 42nd Street, 13th Floor, New York, NY 10036, USA (http://www.ansi.org/).

[2]ANSI C57.12.24-1992 has been withdrawn; however, copies can be obtained from the Sales Department, American National Standards Institute, 11 West 42nd Street, 13th Floor, New York, NY 10036, USA (http://www.ansi.org/).

--`,-`-`,,`,,`,`,,`---
Copyright © 2001 IEEE. All rights reserved.

Copyright The Institute of Electrical and Electronics Engineers, Inc.
Provided by IHS under license with IEEE
No reproduction or networking permitted without license from IHS
Not for Resale

ANSI C57.12.25-1990, American National Standard for Transformers—Pad-Mounted, Compartmental-Type, Self-Cooled, Single-Phase Distribution Transformers with Separable Insulated High-Voltage Connectors; High Voltage, 34 500 GrdY/19 920 Volts and Below; Low Voltage, 240/120 Volts; 167 kVA and Smaller—Requirements.

ANSI C57.12.40-1994, American National Standard for Secondary Network Transformers—Subway and Vault Types (Liquid Immersed)—Requirements.

ANSI C57.12.50-1981 (Reaff 1989), American National Standard Requirements for Ventilated Dry-Type Distribution Transformers, 1 to 500 kVA, Single-Phase, and 15 to 500 kVA, Three-Phase, with High-Voltage 601 to 34 500 Volts, Low-Voltage 120 to 600 Volts.

ANSI C57.12.51-1981 (Reaff 1989), American National Standard Requirements for Ventilated Dry-Type Power Transformers, 501 kVA and Larger, Three-Phase, with High-Voltage 601 to 34 500 Volts, Low-Voltage 208Y/120 to 4160 Volts.

ANSI C57.12.52-1981 (Reaff 1989), American National Standard Requirements for Sealed Dry-Type Power Transformers, 501 kVA and Larger, Three-Phase, with High-Voltage 601 to 34 500 Volts, Low-Voltage 208Y/120 to 4160 Volts.

IEEE 100, *The Authoritative Dictionary of IEEE Standards Terms,* Seventh Edition.[3]

IEEE Std C57.12.00-2000, IEEE Standard General Requirements for Liquid-Immersed Distribution, Power, and Regulating Transformers.

IEEE Std C57.12.01-1998, IEEE Standard General Requiremets for Dry-type Distribution and Power Transformers Including Those with Solid-Cast and/or Resin-Encapsulated Windings.

IEEE Std C57.12.23-1992 (Reaff 1999), IEEE Standard for Transformers—Underground-Type, Self-Cooled, Single-Phase Distribution Transformers With Separable, Insulated, High-Voltage Connectors; High Voltage (24 940 GrdY/14 400 V and Below) and Low Voltage (240/120 V, 167 kVA and Smaller).

IEEE Std C57.12.26-1992, IEEE Standard for Pad-Mounted, Compartmental-Type, Self-Cooled, Three-Phase Distribution Transformers for Use with Separable Insulated High-Voltage Connectors (34 500 GrdY/19 920 V and Below; 2500 kVA and Smaller)[4].

IEEE Std C57.12.80-1978 (Reaff 1992), IEEE Standard Terminology for Power and Distribution Transformers.

IEEE Std C57.12.90-1999, IEEE Standard Test Code for Liquid-Immersed Distribution, Power, and Regulating Transformers and IEEE Guide for Short Circuit Testing of Distribution and Power Transformers.

IEEE Std C57.12.91-1995, IEEE Standard Test Code for Dry-Type Distribution and Power Transformers.

[3]IEEE publications are available from the Institute of Electrical and Electronics Engineers, 445 Hoes Lane, P.O. Box 1331, Piscataway, NJ 08855-1331, USA (http://standards.ieee.org/).

[4]IEEE Std C57.12.26-1992 has been withdrawn; however, copies can be obtained from Global Engineering, 15 Inverness Way East, Englewood, CO 80112-5704, USA, tel. (303) 792-2181 (http://global.ihs.com/).

Copyright © 2001 IEEE. All rights reserved.

Copyright The Institute of Electrical and Electronics Engineers, Inc.
Provided by IHS under license with IEEE
No reproduction or networking permitted without license from IHS
Not for Resale

2. Marking of terminals and identification of windings

2.1 General

The windings of a transformer shall be distinguished from one another as follows: two-winding transformers shall have their windings designated as high voltage (HV or H) and low voltage (LV or X). Transformers with more than two windings shall have their windings designated as H, X, Y, or Z.

2.2 Sequence designation

The highest voltage winding shall be designated as HV or H, except for transformers designed for three-phase to six-phase transformation (see Clause 6). The other windings, in order of decreasing voltage, are designated as X, Y, and Z. If two (or more) windings have the same voltage and different kVA (kilovolt-ampere) ratings, the higher kVA winding receives the prior letter designation of the two (or more) letters available, according to the sequence by voltage as explained above. If two or more windings have the same kVA and voltage rating, the designations of these windings are arbitrarily assigned.

2.3 External terminal designation

In general, external terminals shall be distinguished from one another by marking each terminal with a capital letter, followed by a subscript number. The terminals of the H winding are marked H_1, H_2, H_3, etc. The terminals of the X winding are marked X_1, X_2, X_3, etc.

When two external terminals are connected to the same end of a winding, such as the terminals on loop feed transformers, they shall be identified by the same capital letter and subscripted numeral followed by an additional subscripted letter A or B, for example, H_{1A} and H_{1B}, H_{2A} and H_{2B}.

The identification of external terminals shall be accomplished either by the use of the sketches on the nameplate showing locations of specific terminals, or by physically marking terminals.

2.4 Neutral terminal designation

A neutral terminal of a three-phase transformer shall be marked with the proper letter followed by the subscript 0, for example, H_0, X_0, etc. A neutral terminal common to two or more windings of a single or three-phase transformer shall be marked with the combination of the proper winding letters, each followed by the subscript 0; for example, H_0X_0, as in the case of autotransformers. A terminal brought out from the winding for some other use than that of a neutral terminal (e.g., a 50% starting tap) shall be marked as a tap terminal.

2.5 Grounded terminal designation

If a transformer has a two-terminal winding with one terminal grounded and the other ungrounded, the subscript 2 terminal shall be the grounded terminal.

3. Single-phase transformers

Polarity and terminal markings of single-phase transformers are described in 3.1 through 3.4.

Copyright © 2001 IEEE. All rights reserved.

Copyright The Institute of Electrical and Electronics Engineers, Inc.
Provided by IHS under license with IEEE
No reproduction or networking permitted without license from IHS
Not for Resale

3.1 Types of transformers

3.1.1 Distribution transformers, liquid-insulated

Polarity shall be subtractive for all liquid-insulated distribution transformers, except as otherwise described in applicable sections of IEEE Std C57.12.00-2000 and ANSI C57.12.20-1997, which specify additive polarity for single-phase transformers in sizes 200 kVA and smaller having high-voltage windings 8660 volts and below.

Terminal markings shall be as shown in this standard except as otherwise specified in IEEE Std C57.12.23-1992 and ANSI C57.12.25-1990.

3.1.2 Power transformers, liquid-insulated

Polarity shall be subtractive. Terminal markings not described in IEEE Std C57.12.00-2000 or in ANSI C57.12.10-1988 shall be in accordance with Clause 3 of this standard.

3.1.3 Dry-type transformers

Polarity shall be subtractive. Terminal markings not described in IEEE Std C57.12.01-1998 shall be in accordance with Clause 3 of this standard.

3.1.4 Autotransformers

Single-phase autotransformer terminals shall, as far as practicable, be marked in accordance with the requirements for subtractive polarity (see Figure 1).

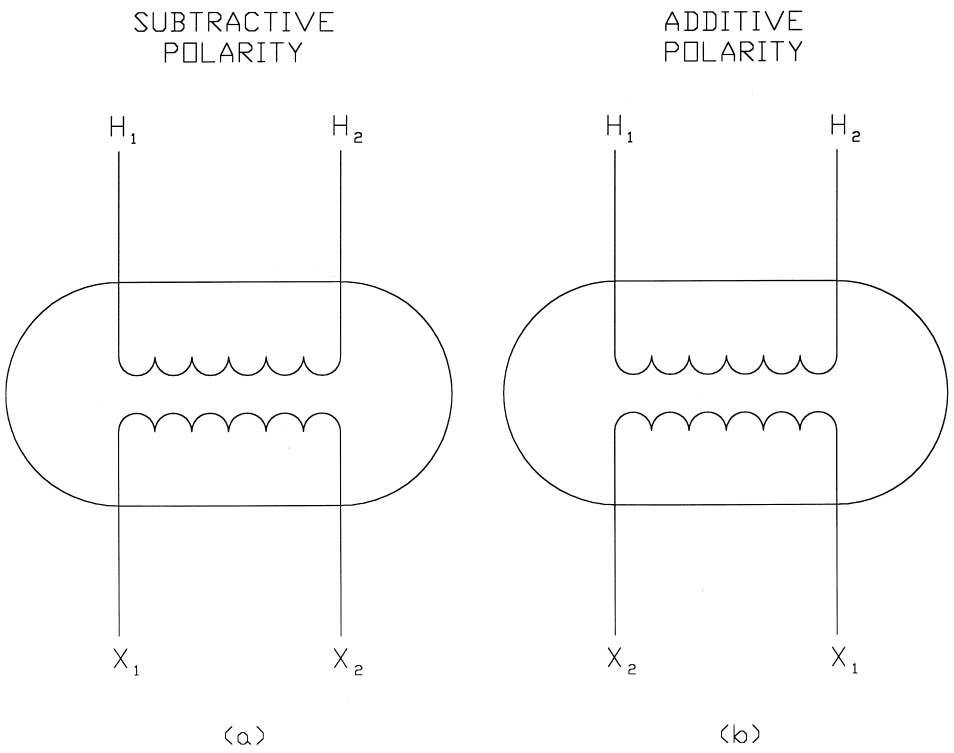

Figure 1—Single-phase transformer terminal markings (simple H and X windings without taps)

Copyright © 2001 IEEE. All rights reserved.
--`,,`-`-`,,`,,`,`,,`---
Copyright The Institute of Electrical and Electronics Engineers, Inc.
Provided by IHS under license with IEEE
No reproduction or networking permitted without license from IHS
Not for Resale

3.2 Subtractive and additive polarity

When terminals of any winding are brought outside the tank and marked per 3.3, 3.4, or 3.5, the polarity of a transformer is

a) Subtractive when H_1 and X_1 are adjacent. See Figure 1, Figure 2(a), Figure 3(a), Figure 4(a), Figure 5, Figure 6(a), Figure 7(a), Figure 8(a), Figure 9(a), Figure 10(a), Figure 11(a), Figure 12(a), and Figure 13(a).

b) Additive when H_1 is diagonally located with respect to X_1. See Figure 2(b), Figure 3(b), Figure 4(b), Figure 6(b), Figure 7(b), Figure 8(b), Figure 9(b), Figure 10(b), Figure 11(b), Figure 12(b), and Figure 13(b).

c) The same rule applies between the H and Y winding and between the H and Z winding. For example, when Y_1 or Z_1 is on the left when facing the Y or Z side of the case, respectively, the polarity is subtractive; conversely, when Y_1 or Z_1 is on the right when facing the Y or Z side of the case, respectively, the polarity is additive.

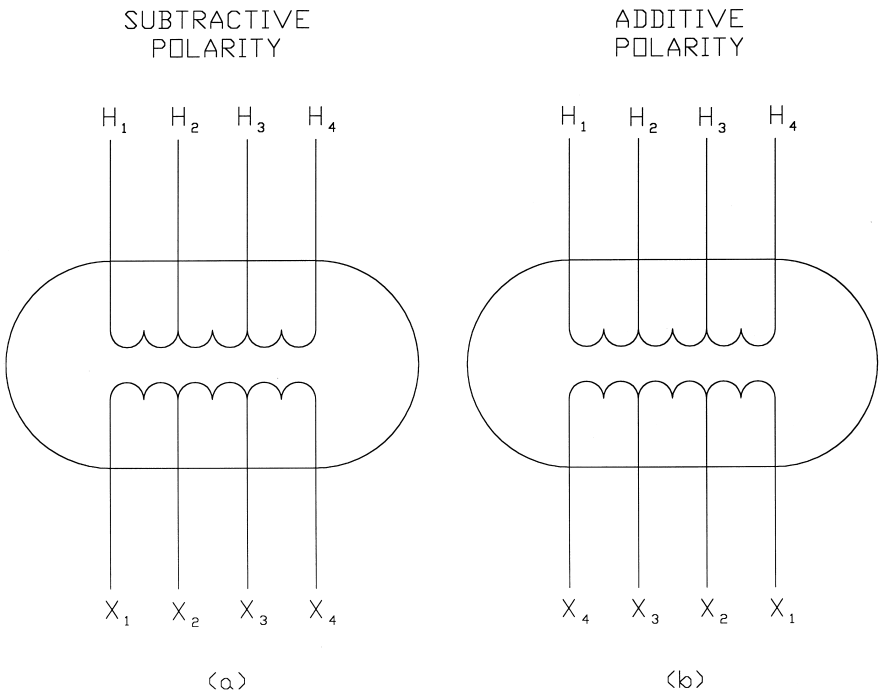

Figure 2—Single-phase transformer terminal markings (simple H and X windings with taps)

Copyright © 2001 IEEE. All rights reserved.

Copyright The Institute of Electrical and Electronics Engineers, Inc.
Provided by IHS under license with IEEE
No reproduction or networking permitted without license from IHS
Not for Resale

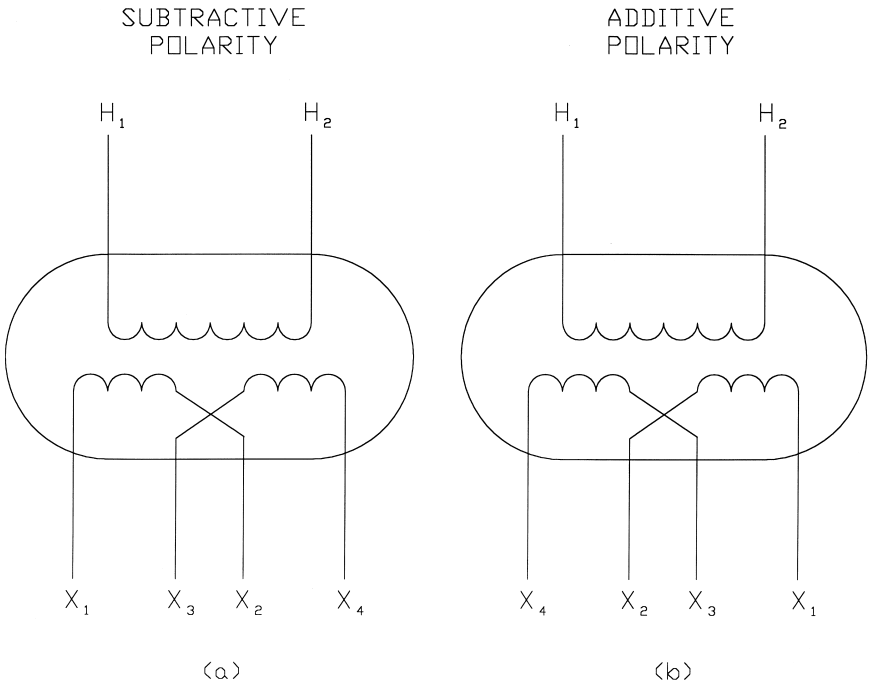

Figure 3—Single-phase transformer terminal markings (series multiple X winding without taps)

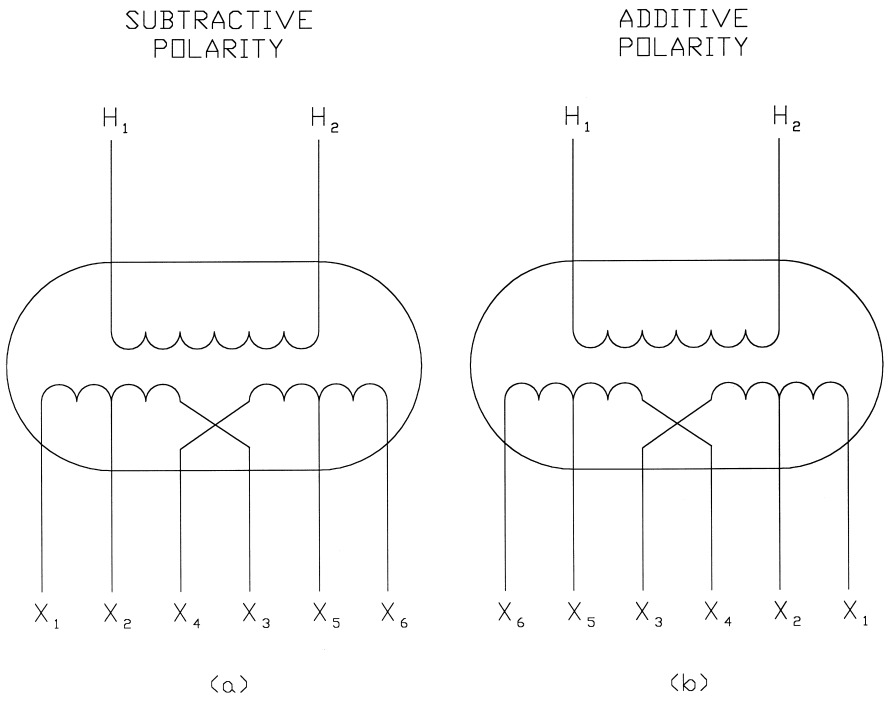

Figure 4—Single-phase transformer terminal markings (series multiple X winding with taps)

Copyright © 2001 IEEE. All rights reserved.

Copyright The Institute of Electrical and Electronics Engineers, Inc.
Provided by IHS under license with IEEE
No reproduction or networking permitted without license from IHS
Not for Resale

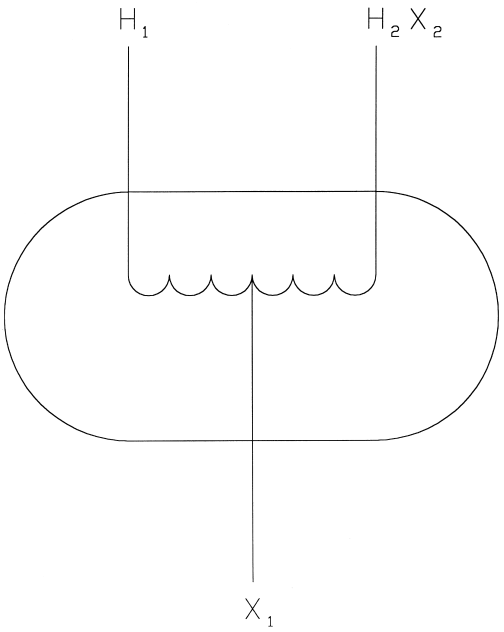

Figure 5—Single-phase transformer terminal markings (autotransformer)

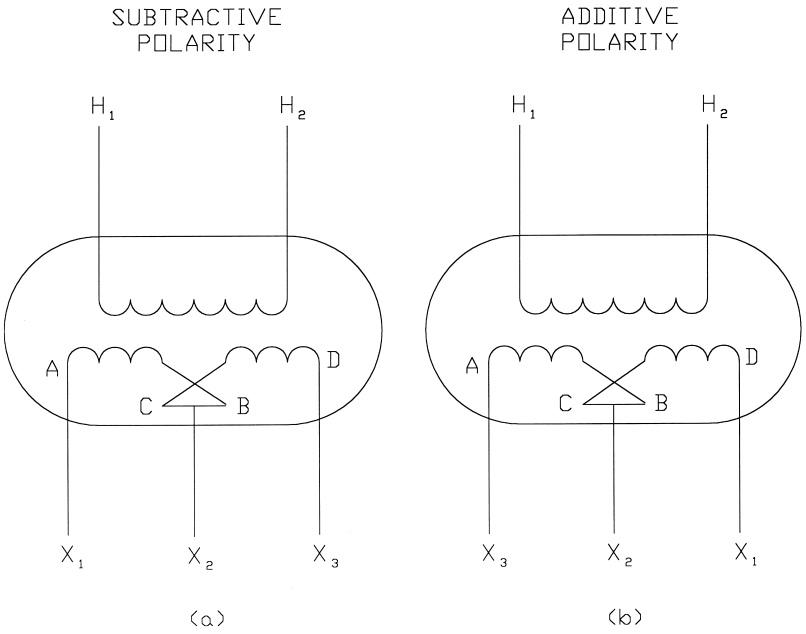

Figure 6—Single-phase transformer terminal markings (three-wire series connection) (transformers having neutral brought out between outside terminals)

Copyright © 2001 IEEE. All rights reserved.

Copyright The Institute of Electrical and Electronics Engineers, Inc.
Provided by IHS under license with IEEE
No reproduction or networking permitted without license from IHS
Not for Resale

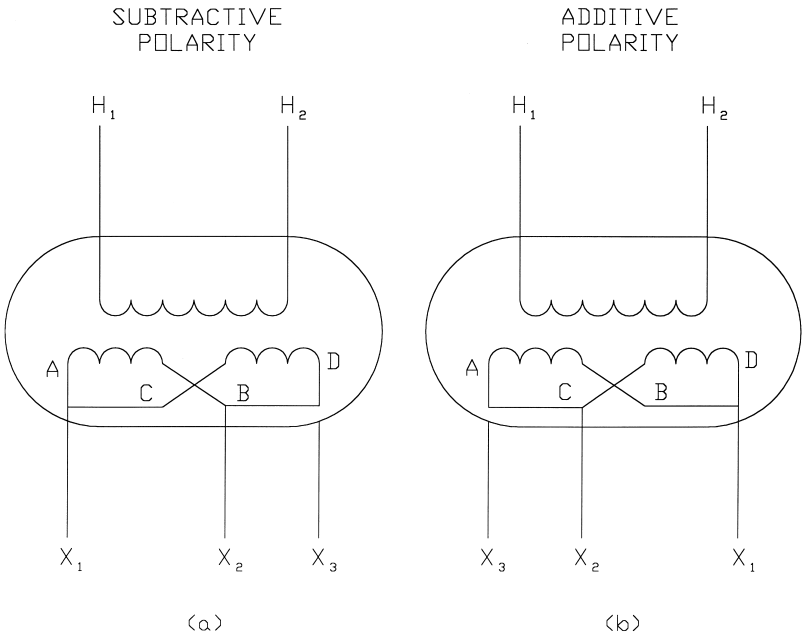

Figure 7—Single-phase transformer terminal markings (two-wire multiple connection)

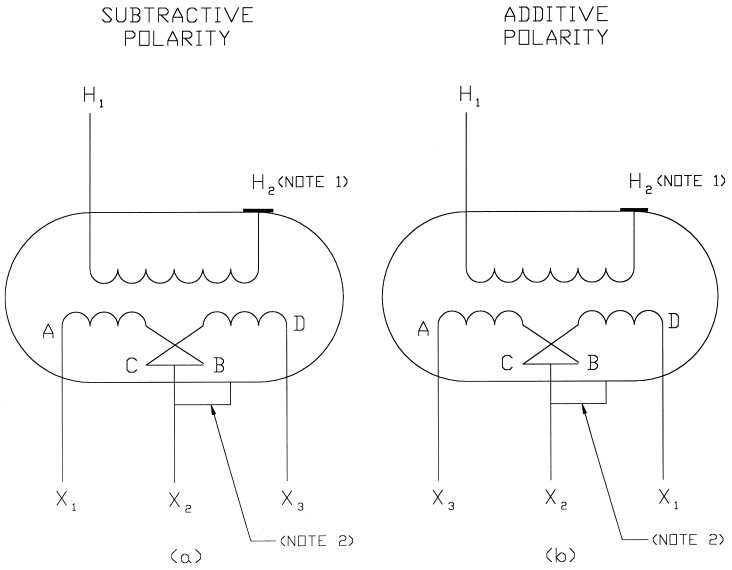

NOTES
1—Tank grounding connector.
2—Bolted to case externally.
(Connection to be furnished by user.)

Figure 8—Single-phase transformer terminal markings (three-wire series connection) (transformers having neutral brought out between outside terminals)

Copyright © 2001 IEEE. All rights reserved.

Copyright The Institute of Electrical and Electronics Engineers, Inc.
Provided by IHS under license with IEEE
No reproduction or networking permitted without license from IHS
Not for Resale

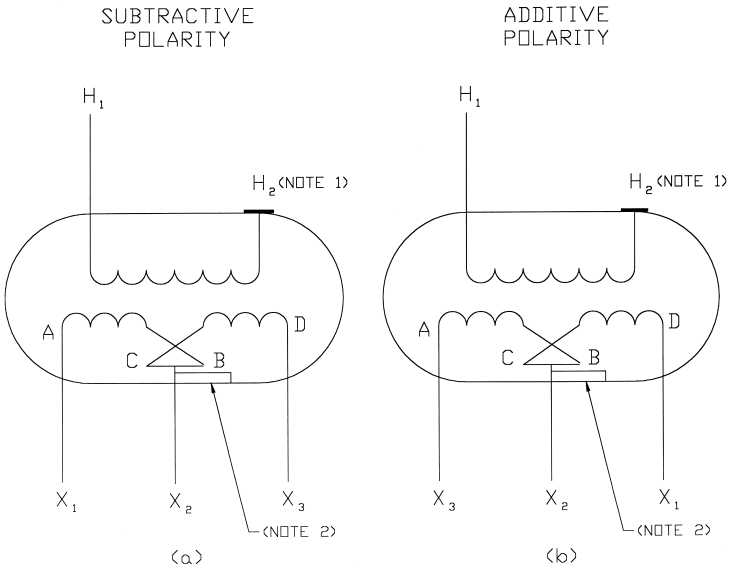

NOTES
1—Tank grounding connector.
2—Bolted to case internally.

Figure 9—Single-phase transformer terminal markings (three-wire series connection) (transformers having neutral brought out between outside terminals)

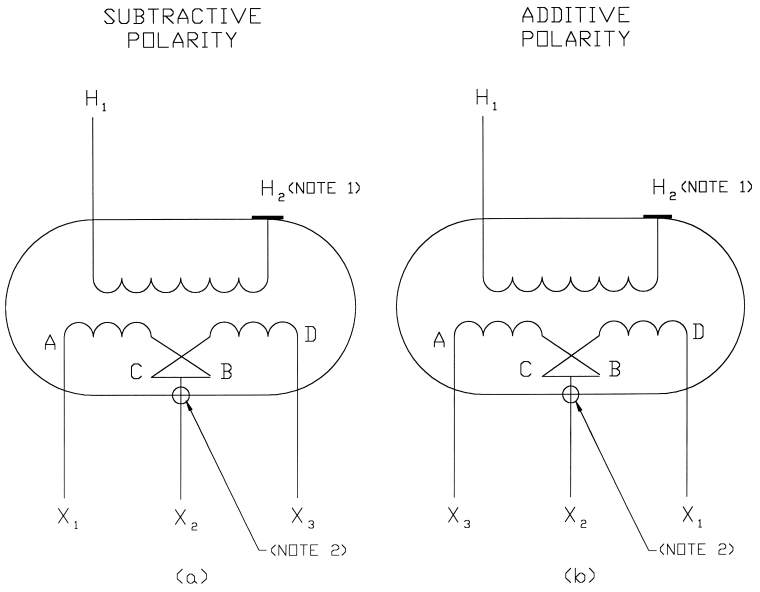

NOTES
1—Tank grounding connector.
2—Bolted to case internally.
3—Figure 10(a) and (b) are related to single-phase submersible transformers with secondary cable lead bushings, which require internal neutral grounding to the tank but externally appear to be an insulated neutral cable.

Figure 10—Single-phase transformer terminal markings (Three-wire series connection) (transformers having neutral brought out between outside terminals)

Copyright © 2001 IEEE. All rights reserved.

Copyright The Institute of Electrical and Electronics Engineers, Inc.
Provided by IHS under license with IEEE
No reproduction or networking permitted without license from IHS
Not for Resale

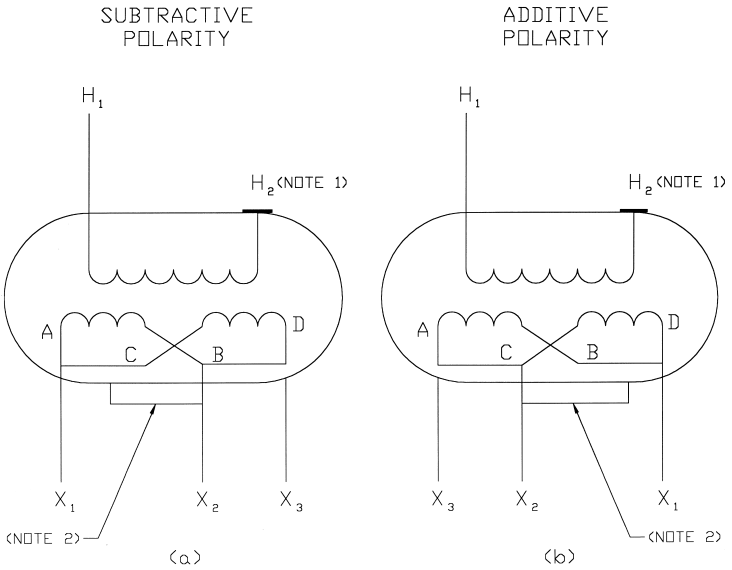

NOTES
1—Tank grounding connector.
2—Bolted to case externally.
(Connection to be furnished by user.)

Figure 11—Single-phase transformer terminal markings (two-wire multiple connection)

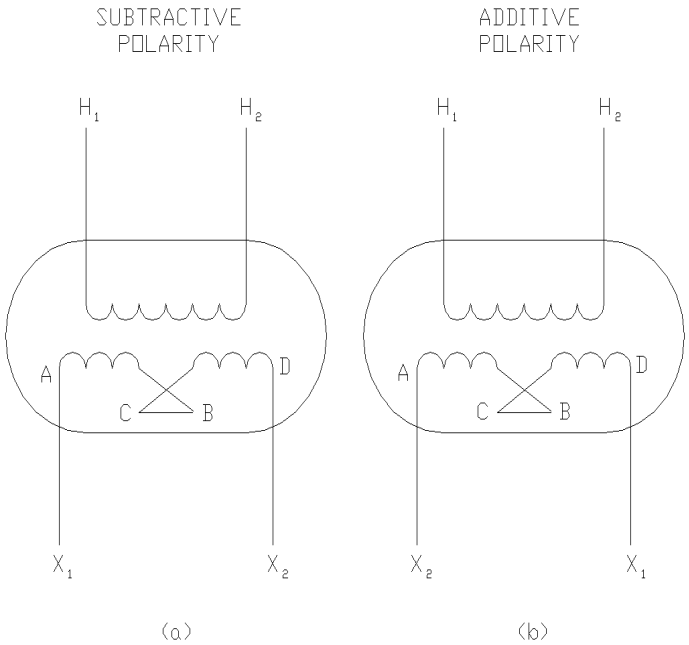

Figure 12—Single-phase transformer terminal markings (two-wire series connection)

Copyright © 2001 IEEE. All rights reserved.

Copyright The Institute of Electrical and Electronics Engineers, Inc.
Provided by IHS under license with IEEE
No reproduction or networking permitted without license from IHS
Not for Resale

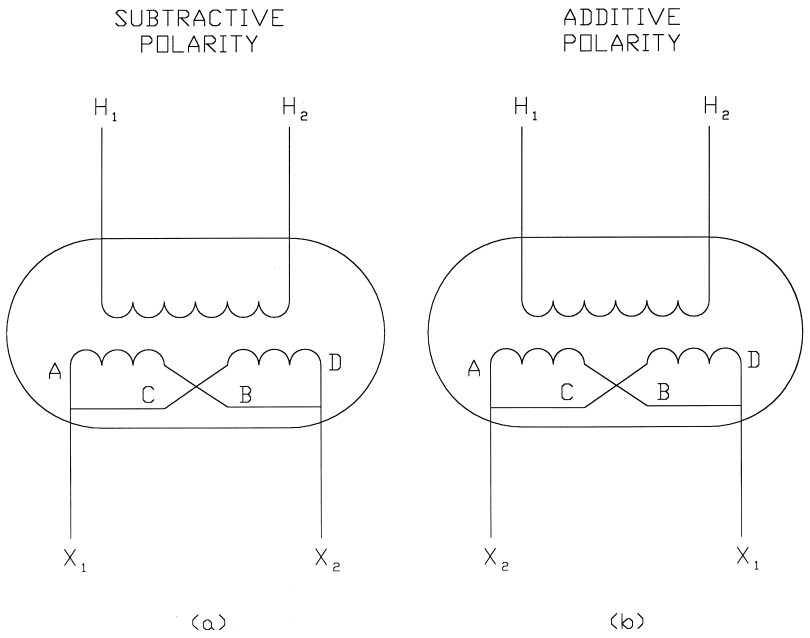

Figure 13—Single-phase transformer terminal markings (two-wire multiple connection)

3.3 Order of numbering terminals of any winding

3.3.1 Terminal numbers

The terminals of any winding whose leads are brought out of the case shall be numbered l, 2, 3, 4, 5, etc., the lowest and highest numbers marking the full winding and the intermediate numbers marking fractions of windings or taps. All numbers shall be so applied that the voltage difference from any terminal having a lower number toward any terminal having a higher number shall have the same sign at any instant (see Figure 2 and Figure 3).

3.3.2 Series-multiple winding

If a winding is divided into two or more parts for series-multiple connections and the leads of these parts are brought out of the case, the above rule shall apply for the series connection with the addition that the terminations of each portion of the winding shall be given consecutive numbers (see Figure 2 through Figure 4 for four or six leads brought out and Figure 6 through Figure 11 for three leads brought out).

3.3.3 Two leads through one bushing

When two leads are brought out of the case through one bushing (to minimize inductive effect), such terminals shall be physically identified by stamping or tagging in compliance with 3.3.1.

3.4 Order of numbering terminals of different windings

The numbering of the terminals of the H winding and the terminals of the X winding shall be applied so that when H_l and X_l are connected together and voltage is applied to the transformer, the voltage between the highest numbered H terminal and the highest numbered X terminal is less than the voltage of the H winding.

When more than two windings are used, the same relationship shall apply between each pair of windings.

Copyright © 2001 IEEE. All rights reserved.

Copyright The Institute of Electrical and Electronics Engineers, Inc.
Provided by IHS under license with IEEE
No reproduction or networking permitted without license from IHS
Not for Resale

3.5 Location of H_1 terminal

The H_1 lead shall be brought out as the right-hand terminal of the high-voltage group as seen when facing the highest voltage side of the case; other H terminals shall be in numerical order from right to left, except as modified by specific product standards (e.g., IEEE Std C57.12.23-1992 and ANSI C57.12.25-1990).

When only one lead of the high-voltage winding is brought out (the other lead being connected to the tank internally), it shall be designated as H_1. For polarity marking and testing, this H_1 terminal shall be regarded as located on the right, when facing the high-voltage side of the case, regardless of its actual location.

When the high-voltage leads are brought out through two bushings of different insulation levels, the bushing having the higher voltage level shall be designated as H_1 and shall be located on the right-hand side when facing the high-voltage side of the case, except as modified by specific product standards (e.g., IEEE Std C57.12.23-1992 and ANSI C57.12.25-1990).

3.6 Parallel operation

Transformers having terminals marked in accordance with this standard may be operated in parallel by connecting similarly marked terminals together, provided their ratios, voltages, resistances, reactances, and ground connections are such as to permit parallel operation (see Figure 14 for connections for transformers in parallel).

NOTE—In some cases, designs may be such as to permit parallel operation, although, due to a difference in the number of tap terminals, the terminals to be connected together may not be similarly marked.

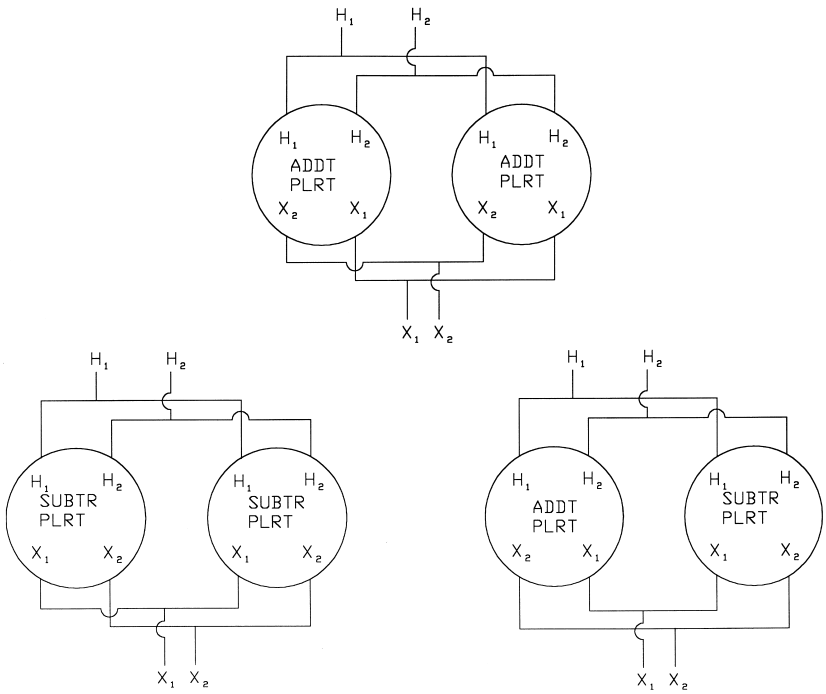

NOTE—This figure is included as information to illustrate the connection in parallel of single-phase transformers of additive polarity, additive and subtractive polarity, and subtractive polarity in banks.

Figure 14—Connections for single-phase transformers in parallel

Copyright © 2001 IEEE. All rights reserved.

Copyright The Institute of Electrical and Electronics Engineers, Inc.
Provided by IHS under license with IEEE
No reproduction or networking permitted without license from IHS
Not for Resale

4. Angular displacement and connections for single-phase transformers in three-phase and six-phase banks

See Figure 15 through Figure 18.

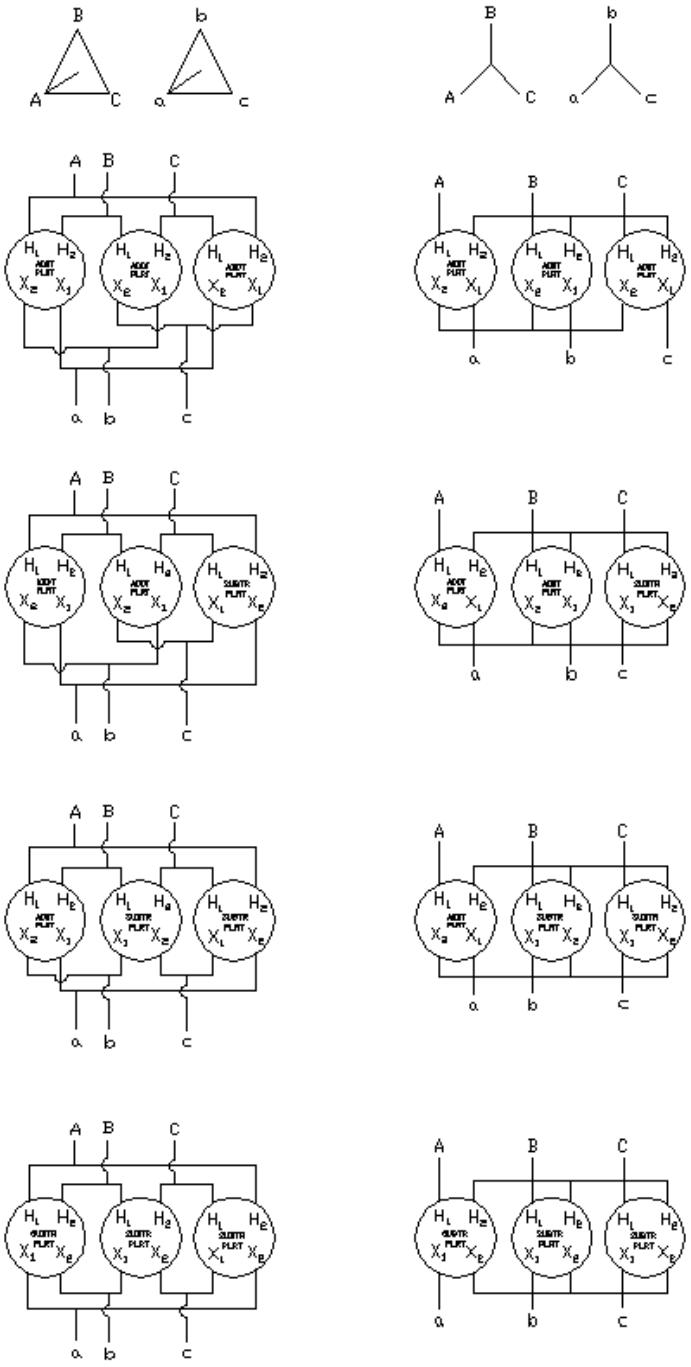

NOTE—This figure is included to illustrate connections of single-phase transformers of additive polarity, additive and subtractive polarity, and subtractive polarity in banks.

Figure 15—Single-phase transformers connected Δ-Δ and Y-Y in three-phase banks with 0° angular displacement

Copyright © 2001 IEEE. All rights reserved.

Copyright The Institute of Electrical and Electronics Engineers, Inc.
Provided by IHS under license with IEEE
No reproduction or networking permitted without license from IHS
Not for Resale

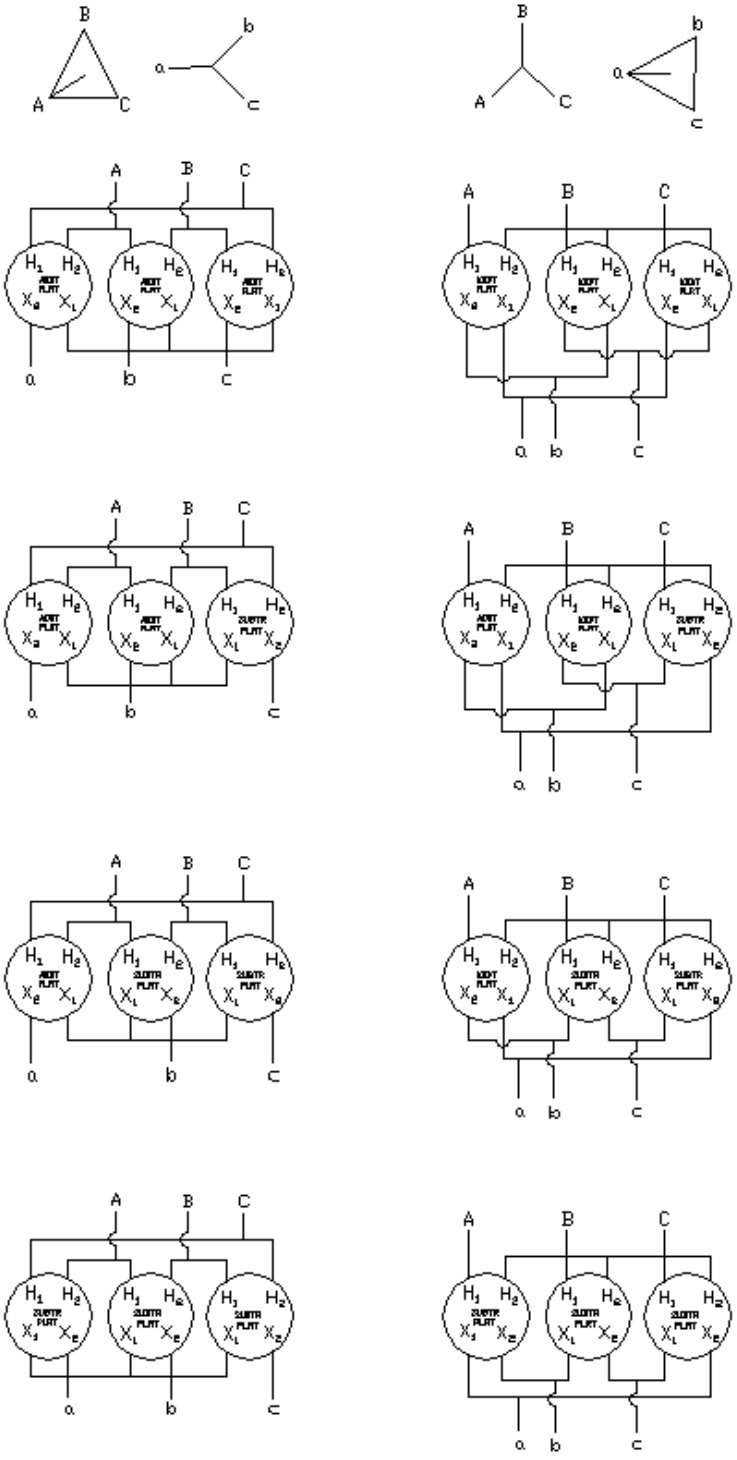

NOTE—This figure is included to illustrate connections of single-phase transformers of additive polarity, additive and subtractive polarity, and subtractive polarity in banks.

Figure 16—Single-phase transformers connected Δ-Y and Y-Δ in three-phase banks with 30° angular displacement

Copyright © 2001 IEEE. All rights reserved.

Copyright The Institute of Electrical and Electronics Engineers, Inc.
Provided by IHS under license with IEEE
No reproduction or networking permitted without license from IHS
Not for Resale

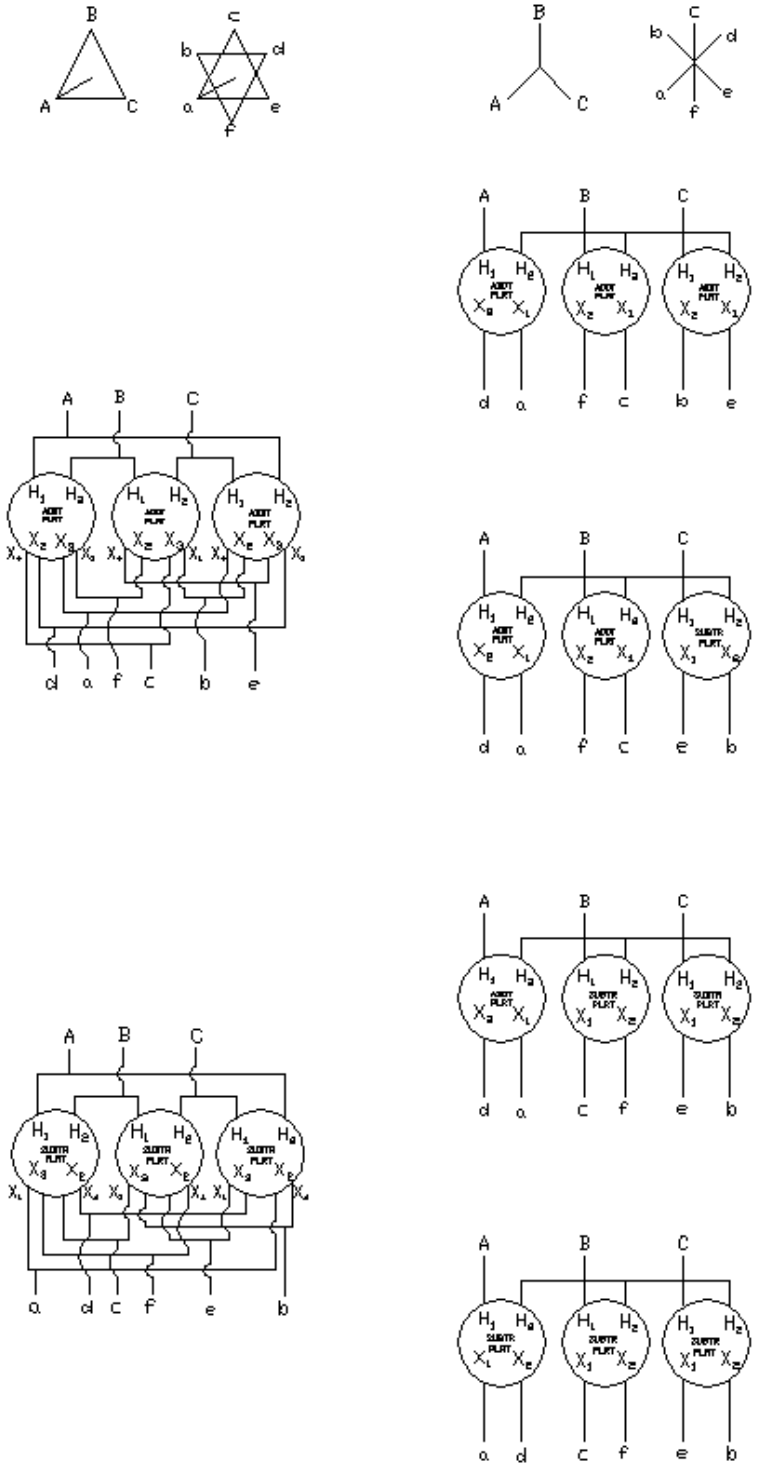

NOTE—This figure is included to illustrate connections of single-phase transformers of additive polarity, additive and subtractive polarity, and subtractive polarity in banks.

Figure 17—Single-phase transformers when transforming three- to six-phase with 0° angular displacement

Copyright © 2001 IEEE. All rights reserved.

Copyright The Institute of Electrical and Electronics Engineers, Inc.
Provided by IHS under license with IEEE
No reproduction or networking permitted without license from IHS
Not for Resale

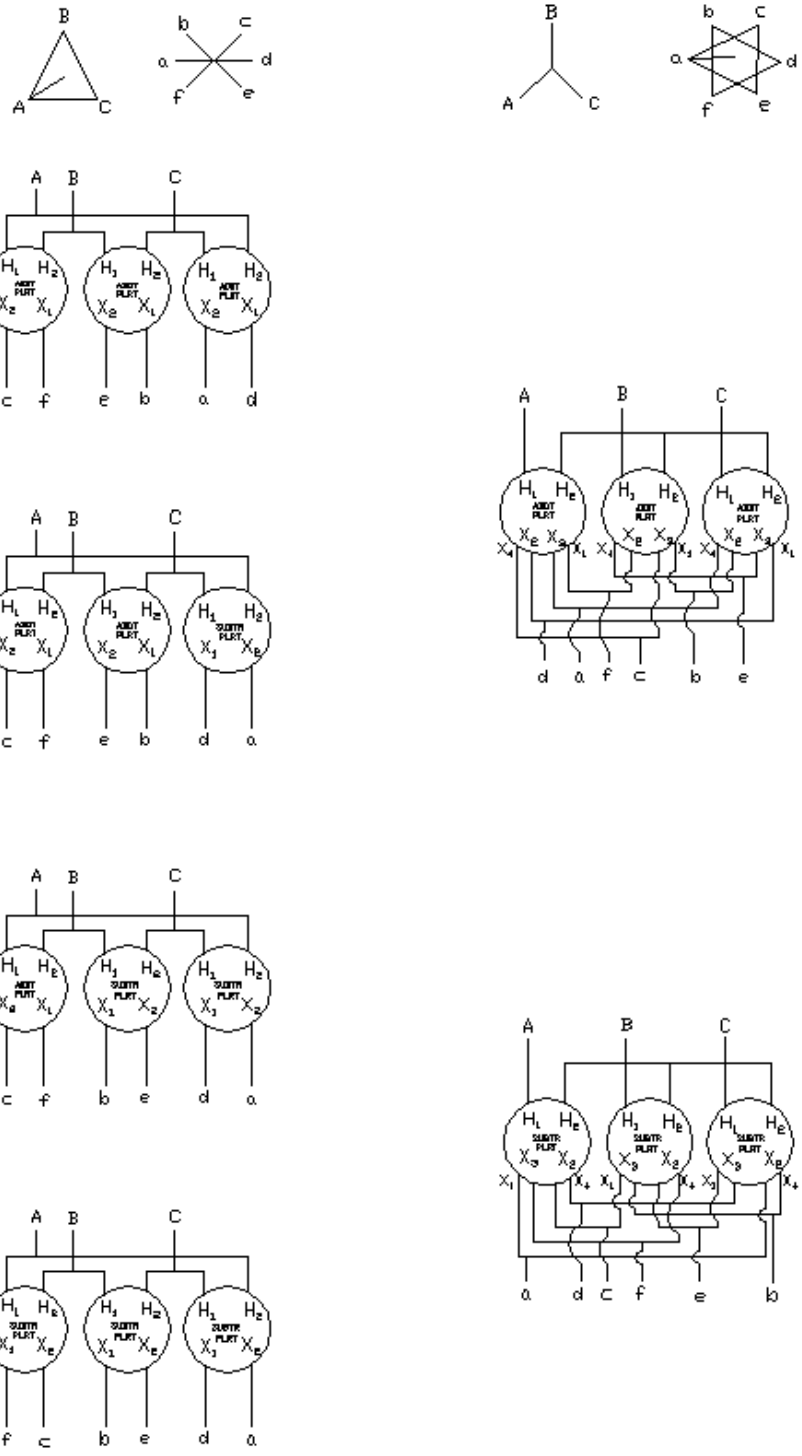

NOTE—This figure is included to illustrate connections of single-phase transformers of additive polarity, additive and subtractive polarity, and subtractive polarity in banks.

Figure 18—Single-phase transformers when transforming three- to six-phases with 30° angular displacement

Copyright © 2001 IEEE. All rights reserved.

Copyright The Institute of Electrical and Electronics Engineers, Inc.
Provided by IHS under license with IEEE
No reproduction or networking permitted without license from IHS
Not for Resale

5. Phase relationships and terminal markings for three-phase transformers

5.1 Relation between highest voltage winding and other windings

5.1.1 Phase sequence markings

The markings shall be so applied that if the phase sequence of voltage on the highest voltage winding is in the time order H_1, H_2, H_3, it will be in the time order of X_1, X_2, X_3, and Y_1, Y_2, Y_3, etc., on the other windings.

5.1.2 Phase relationship markings

In order that the markings of terminals shall indicate definite phase relations, they shall be made in accordance with one of the three-phase groups shown in Figure 19. The angular displacement between the H winding and the X winding is the angle in each of the voltage phasor diagrams (see Figure 19), between the lines passing from its neutral point through H_1 and X_1, respectively.

Copyright © 2001 IEEE. All rights reserved.

Copyright The Institute of Electrical and Electronics Engineers, Inc.
Provided by IHS under license with IEEE
No reproduction or networking permitted without license from IHS
Not for Resale

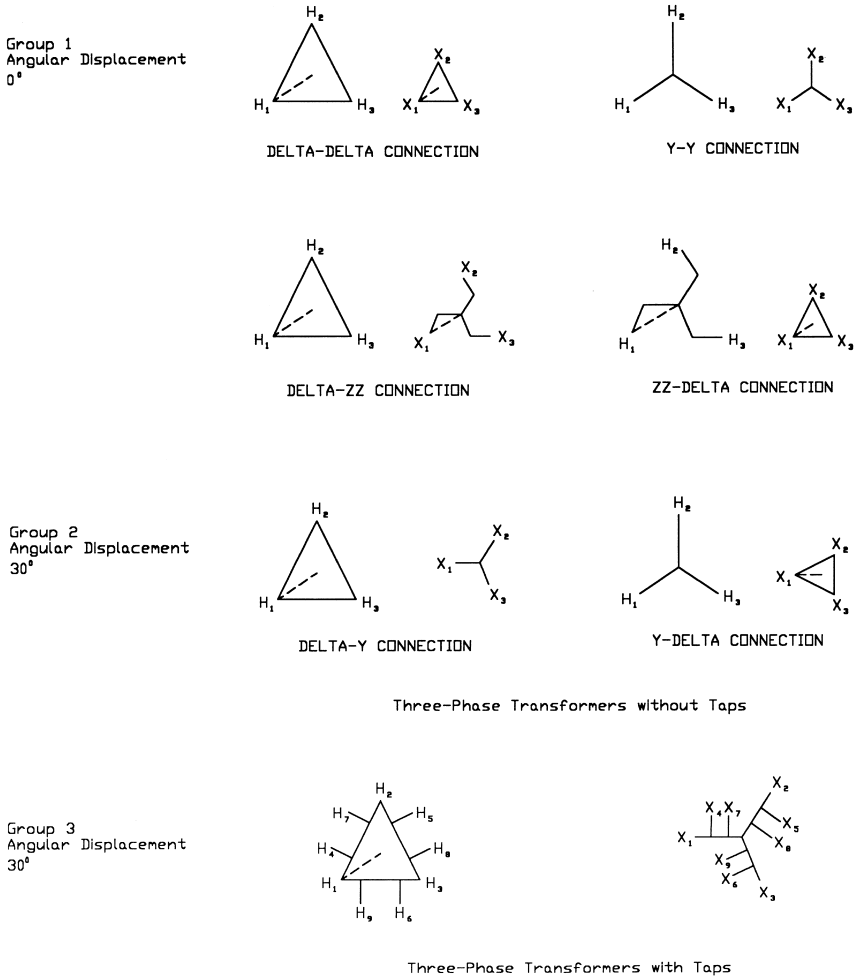

NOTES
1—This figure is included to illustrate the method of marking transformer terminals that are brought out of the case. Dash lines show angular displacement between high- and low-voltage windings.
2—Angular displacement is the angle between a line drawn from neutral to H_1 and a line drawn from neutral to X_1, measured in a clockwise direction from H_1 to X_1.
3—The zig-zag connections shown in Group 1 may also be achieved using the following internal connections.

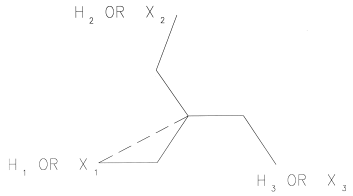

Figure 19—Terminal markings and voltage diagrams for three-phase transformer connections

Copyright © 2001 IEEE. All rights reserved.

Copyright The Institute of Electrical and Electronics Engineers, Inc.
Provided by IHS under license with IEEE
No reproduction or networking permitted without license from IHS
Not for Resale

5.2 Phase relationships and terminal markings

Phase relationships and terminal markings for liquid-insulated distribution transformers shall be as specified in general and product standards IEEE Std C57.12.00-2000, ANSI C57.12.20-1997, ANSI C57.12.22-1989, ANSI C57.12.24-1992, IEEE Std C57.12.26-1992, and ANSI C57.12.40-1994.

Phase relationships and terminal markings for liquid-insulated power transformers shall be as specified in general and product standards IEEE Std C57.12.00-2000 and ANSI C57.12.10-1988.

Phase relationships and terminal markings for dry-type distribution and power transformers shall be as specified in general and product standards IEEE Std C57.12.01-1998, ANSI C57.12.50-1981, ANSI C57.12.51-1981, and ANSI C57.12.52-1981.

5.3 Marking of full winding terminals

5.3.1 General

The three leads for each winding that connect to the full-phase windings of a three-phase transformer shall have their terminals marked H_1, H_2, H_3, X_1, X_2, X_3, Y_1, Y_2, Y_3, etc., respectively.

5.3.2 Autotransformers

Three-phase autotransformer terminals shall be marked in accordance with the requirements for corresponding multiwinding transformers (see Figure 20, Group 3).

Copyright © 2001 IEEE. All rights reserved.

Copyright The Institute of Electrical and Electronics Engineers, Inc.
Provided by IHS under license with IEEE
No reproduction or networking permitted without license from IHS
Not for Resale

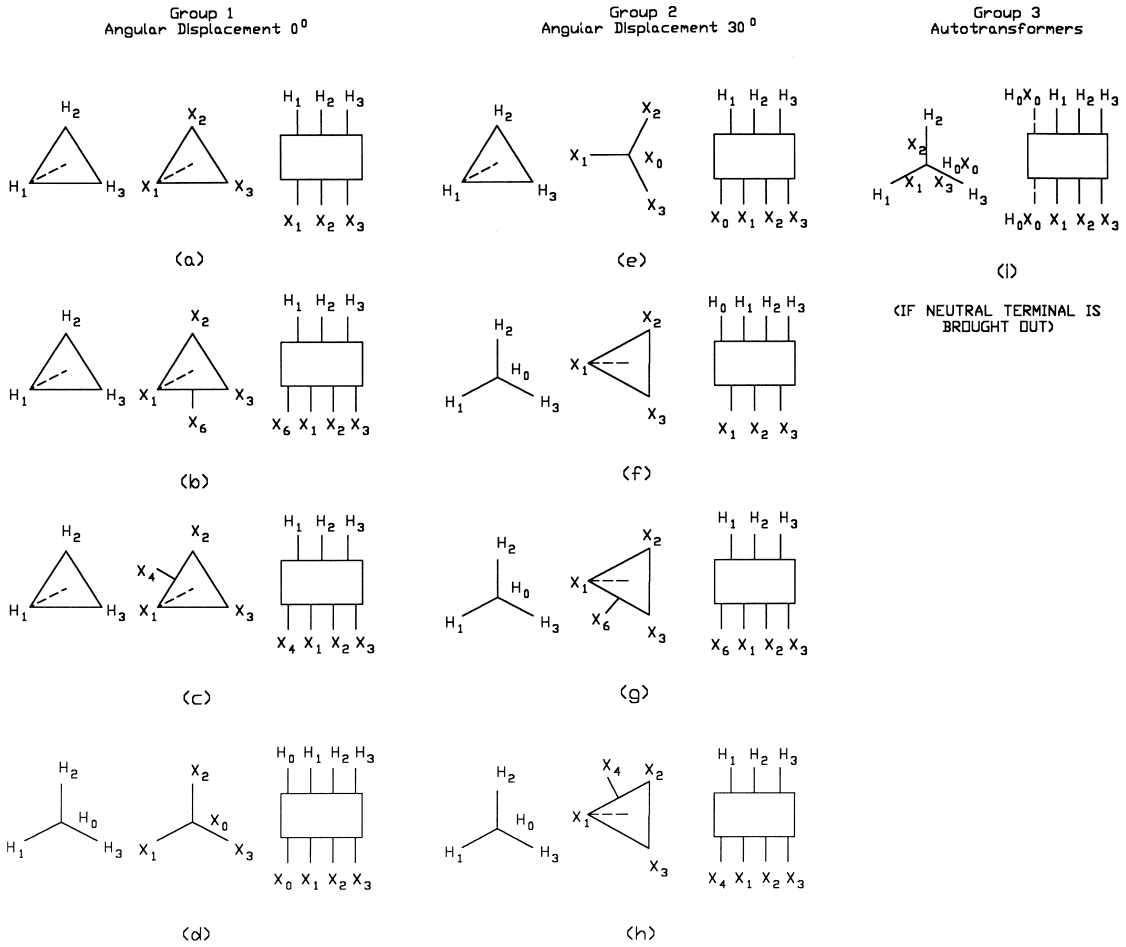

NOTES
1—Dash lines show angular displacement between high- and low-voltage windings.
2—Angular displacement is the angle between a line drawn from neutral to H_1 and a line drawn from neutral to X_1 measured in a clockwise direction from H_1 to X_1.
3—(b), (c), (g), and (h) show mid tap brought out of one phase on the low-voltage side.

Figure 20—Angular displacement and terminal markings for three-phase transformers

5.4 Tap leads

In general, where tap leads are brought out of the case (neutral lead excepted) their terminals shall be marked with the proper letter followed by the subscripts 4, 7, etc., for one phase; 5, 8, etc., for a second phase; and 6, 9, etc., for the third phase (see Figure 19, Group 3).

For delta connections, the order of numbering tap terminals shall be as follows; 4, 7, etc., from terminal 1 toward terminal 2; 5, 8, etc., from terminal 2 toward terminal 3; and 6, 9, etc., from terminal 3 toward terminal 1 (see Figure 19, Group 3).

For wye connections, the order of numbering tap terminals shall be as follows; 4,7, etc., from terminal 1 toward neutral; 5, 8, etc., from terminal 2 toward neutral; and 6, 9, etc., from terminal 3 toward neutral (see Figure 19, Group 3).

Copyright © 2001 IEEE. All rights reserved.

Copyright The Institute of Electrical and Electronics Engineers, Inc.
Provided by IHS under license with IEEE
No reproduction or networking permitted without license from IHS
Not for Resale

For a delta-connected winding with a center-tap in one leg, two connections are in common use as described below

a) Unless otherwise specified, a center-tap X_6 shall be provided in leg X_1X_3, as shown in Figure 20(b) or Figure 20(g).

NOTE—This connection provides coordination with ANSI/NFPA 70-1996, paragraph 384-3(f), which requires that the B phase (commonly connected to X_2) shall have the higher voltage to ground.

b) When specified, a center tap X_4 shall be provided in leg X_1X_2, as shown in Figure 20(c) or Figure 20(h).

NOTE—This connection will also conform to ANSI/NFPA 70-1996, paragraph 384-3(f), if the B phase is connected to X_3.

5.5 Location of external terminals

5.5.1 Station type transformers

For station type transformers, and others with high-voltage and low-voltage terminals on opposite sides of the case, the H_1 lead shall be brought to a terminal on the right-hand side of the case when facing the highest voltage side. The H_2 and H_3 terminals shall be arranged in numerical order reading from right to left when facing the highest voltage side. The H_0 terminal, if present, shall be located on the right of the H_1 terminal when facing the highest voltage side of the case (see Figure 20, Group 1 and Group 2).

The X_1 lead shall be brought to a terminal on the left-hand side of the case when facing the low-voltage side. The X_2 and X_3 terminals shall be arranged in numerical order, reading from left to right, when facing the X winding side of the case. The X_0 terminal, if present, shall be located to the left of the X_1 terminal when facing the X winding side of the case (see Figure 20, Group 1 and Group 2).

The Y winding and Z winding terminals, if present, shall be numbered in the same manner as the low-voltage terminals.

5.5.2 Secondary network, subway, and vault-type transformers

Locations of line and neutral terminals of secondary network, subway, and vault-type transformers differs from the locations above and are shown in ANSI C57.12.40-1994.

5.5.3 Unit substation transformers

The winding terminals of “standard” and “reverse” unit substation transformers shall be located in accordance with Figure 21 or Figure 22.

Copyright © 2001 IEEE. All rights reserved.

Copyright The Institute of Electrical and Electronics Engineers, Inc.
Provided by IHS under license with IEEE
No reproduction or networking permitted without license from IHS
Not for Resale

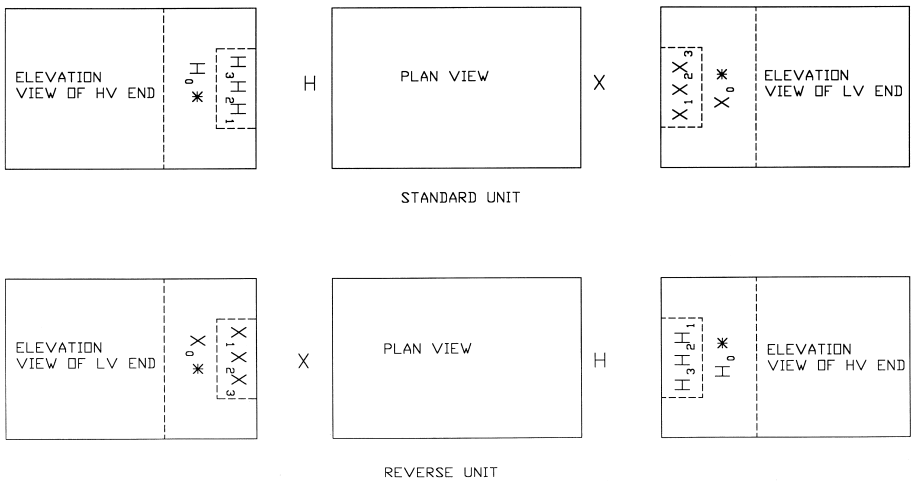

NOTE—High-voltage terminals are denoted by H and low-voltage terminals are denoted by X.

*Neutral shall be located within dotted zone.

Figure 21—Terminal markings and locations for unit substation transformers with high- and low-voltage sidewall bushings

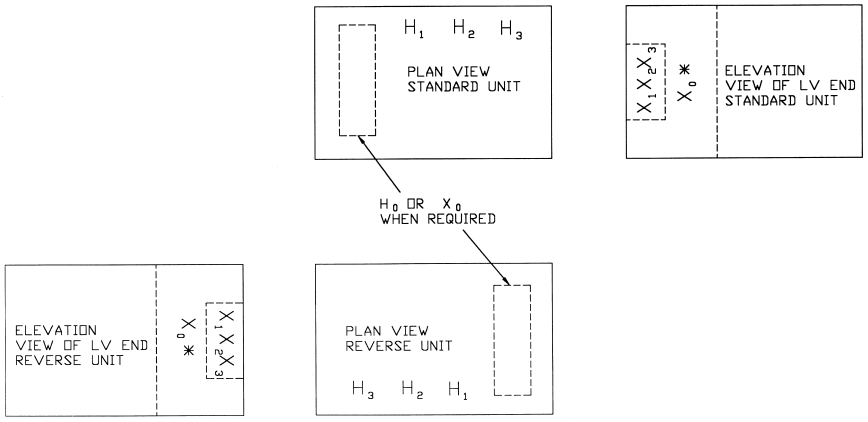

*Neutral shall be located within dotted zone.

Figure 22—Terminal markings and locations for unit substation transformers with high-voltage cover bushings

When specified, winding terminals of “standard” and “reverse,” or “right” and “left”-hand units, may have other terminal markings or arrangements.

5.5.4 Padmounted, compartmental-type transformers

For padmounted compartmental-type transformers with all terminals on one side of the case, the high-voltage compartment shall be located on the left side of the case, when facing the terminal side of the case. The H_1 terminal shall be located on the left of the high-voltage compartment. The compartment with the low-voltage terminals shall be grouped on the right-hand side of the case when facing the terminal side of the

Copyright © 2001 IEEE. All rights reserved.

Copyright The Institute of Electrical and Electronics Engineers, Inc.
Provided by IHS under license with IEEE
No reproduction or networking permitted without license from IHS
Not for Resale

case. The low-voltage neutral terminal, when required, shall be located to the left side of the low-voltage terminal grouping followed by X_1, X_2, and X_3 in a left-to-right-arrangement. ANSI C57.12.22-1989 and IEEE Std C57.12.26-1992 should be referred to for the arrangements and specific dimensional requirements of the terminal arrangements.

5.6 Interphase connections made outside of case

Where the interphase connections are made outside the case, the terminals shall be marked with the proper letter followed by the numbers 1, 4, 7, 10, etc., for one phase; 2, 5, 8, 11, etc., for the second phase; and 3, 6, 9, 12, etc., for the third phase.

The markings shall be so applied that when a wye connection is made by joining together the highest numbered terminals of each phase, the requirements in this standard will apply except for 2.4.

5.7 Parallel operation

Transformers having terminals marked in accordance with this standard may be operated in parallel by connecting similarly marked terminals together, provided that their angular displacements are the same and also provided that their ratios, voltages, resistances, reactances, and ground connections are such as to permit parallel operation.

NOTE—In some cases, designs may be such as to permit parallel operation, although owing to a difference in the number of tap terminals, the terminals to be connected together may not be similarly marked.

6. Terminal markings for three-phase to six-phase transformers

6.1 General

The requirements for three-phase to six-phase transformers are set up on the basis that the three-phase winding is always the H winding.

6.2 Marking of full winding terminals

The three terminals that connect to the three-phase winding shall be marked H_1, H_2, H_3, and the six terminals that connect to the full six-phase winding shall be marked X_1, X_2, X_3, X_4, X_5, X_6 (see Figure 23, Group 1 and Group 2).

Copyright © 2001 IEEE. All rights reserved.

Copyright The Institute of Electrical and Electronics Engineers, Inc.
Provided by IHS under license with IEEE
No reproduction or networking permitted without license from IHS
Not for Resale

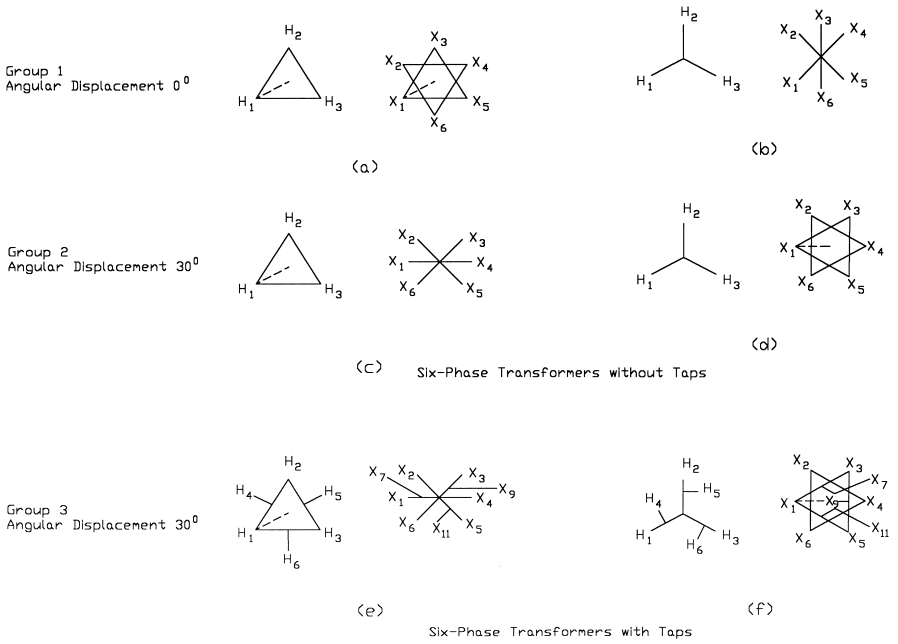

NOTES
1—This figure is included to illustrate the method of marking transformer terminals that are brought out of the case. Dash lines show angular displacement between high- and low-voltage windings.
2—Angular displacement is the angle between a line drawn from neutral to H_1 and a line drawn from neutral to X_1 measured in a clockwise direction from H_1 to X_1.

Figure 23—Terminal markings and voltage phasor diagrams for usual six-phase transformer connections

6.3 Relation between three-phase and six-phase windings

The markings shall be so applied that if the phase sequence of voltage on the three-phase terminals is in the order H_1, H_2, H_3, it is in the time order $X_1, X_2, X_3, X_4, X_5, X_6$ on the six-phase terminals.

In order that the markings of terminal connections between phases will indicate definite phase relations, they shall be made in accordance with one of the four six-phase groups shown in Figure 23, Group 1 and Group 2. The angular displacement between the three-phase and six-phase windings is the angle in each of the voltage phasor diagrams from its neutral through H_1 and X_1, respectively.

6.4 Tap leads

Where tap leads from the six-phase windings are brought out of the case (neutral lead excepted), they shall have terminals marked as designated in 6.4.1 and 6.4.2.

6.4.1 Diametrical connections

Tap terminals shall be marked from the two ends of each phase winding toward the middle or neutral point in the following order:

a) X_7, X_{13}, etc., from X_1 toward neutral
b) X_8, X_{14}, etc., from X_2 toward neutral

Copyright © 2001 IEEE. All rights reserved.

Copyright The Institute of Electrical and Electronics Engineers, Inc.
Provided by IHS under license with IEEE
No reproduction or networking permitted without license from IHS
Not for Resale

c) X_9, X_{l5}, etc., from X_3 toward neutral
d) X_{10}, X_{l6}, etc., from X_4 toward neutral
e) X_{ll}, X_{l7}, etc., from X_5 toward neutral
f) X_{l2}, X_{l8}, etc., from X_6 toward neutral

See Figure 23(e).

A tap from the middle point of any phase winding not intended as a neutral shall be given a number determined by counting from X_1, X_2, or X_3 and not from X_4, X_5, or X_6. For example, if the only taps brought out are 50% starting taps, they shall be numbered X_7, X_9, and X_{ll}.

6.4.2 Double-delta connection

Tap terminals shall be marked in the following order:

a) X_7, X_{l3}, etc., from X_1 toward X_3
b) X_8, X_{l4}, etc., from X_2 toward X_4
c) X_9, X_{15}, etc., from X_3 toward X_5
d) X_{10}, X_{l6}, etc., from X_4 toward X_6
e) X_{ll}, X_{l7}, etc., from X_5 toward X_1
f) X_{l2}, X_{l8}, etc., from X_6 toward X_2

See Figure 23(f).

7. Use of transformers with standard voltage diagrams in connecting systems of various phase displacements

7.1 General

On the basis of two power or source systems (hereafter referred to as systems), one with phase terminals arbitrarily designated by A, B, C, and the other by a, b, c, the phase displacement of "a" with respect to "A" may be from 0° to 330° in steps of 30°. Examples are given in 7.2 through 7.4 of transformer connections that may be made to transformers for any of these displacements.

Copyright © 2001 IEEE. All rights reserved.

Copyright The Institute of Electrical and Electronics Engineers, Inc.
Provided by IHS under license with IEEE
No reproduction or networking permitted without license from IHS
Not for Resale

7.2 0˚ phase displacement: Δ-Δ or Y-Y

The following examples are for Δ-Δ connections with system displacements of 0˚, 120˚, and 240˚.

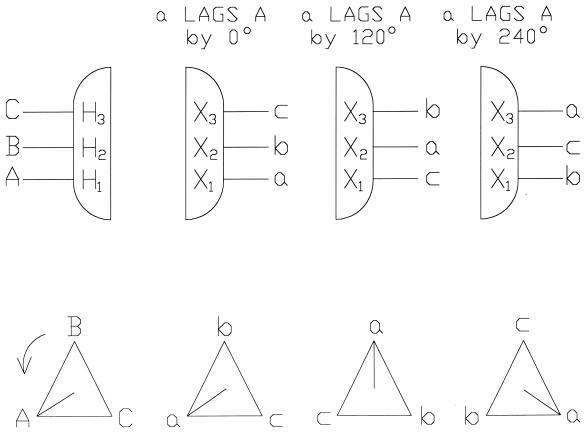

7.3 30˚ lagging phase displacement: Δ-Y or Y-Δ

The following examples are for Δ-Y connections with system displacements of 30˚, 150˚, and 270˚ lagging.

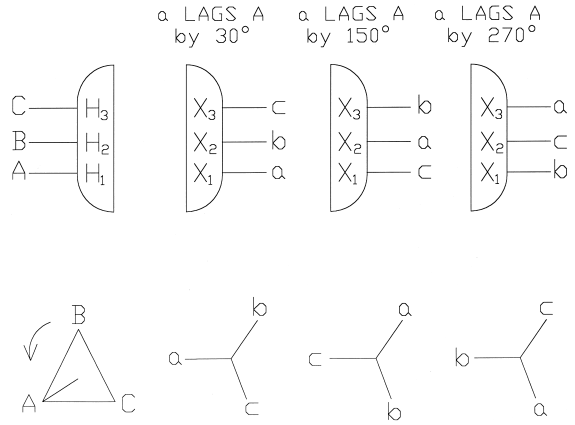

7.4 30˚ leading phase displacement: Δ-Y or Y-Δ

To connect systems with 30°, 270°, or 150° leading displacements, the procedure given in 7.3 is followed, except that the sequence of connecting system terminals to the transformer is reversed by reversing any pair of terminals on both systems, such as B, C and b, c.

For example, again using the Δ-Y diagram, when the diagram is shown in the usual form, the change in the sequence of connections results in a reversal of phase rotation as seen by the transformer terminals. Expressed in the recognized counterclockwise rotation, the equivalent diagrams are as follows.

Copyright © 2001 IEEE. All rights reserved.

Copyright The Institute of Electrical and Electronics Engineers, Inc.
Provided by IHS under license with IEEE
No reproduction or networking permitted without license from IHS
Not for Resale

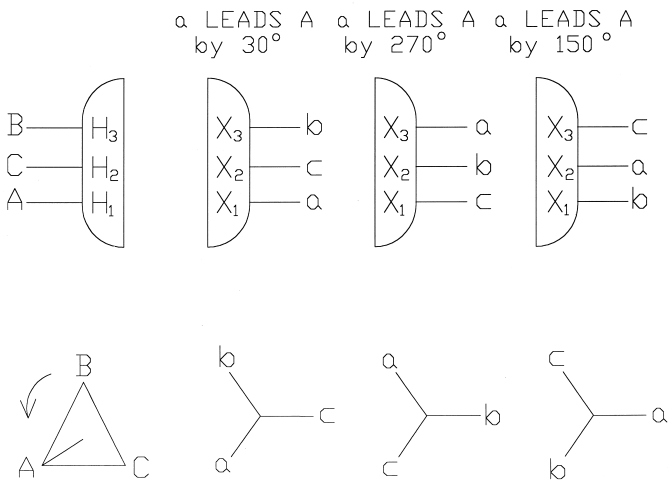

The leading displacements mentioned above can be expressed as lagging displacements for reference consistency by subtracting the lead angle degrees from 360°. For example, the 30° leading displacement is the same as 330° lagging displacement.

7.5 Summary of preceding examples

System	Displacement	Degrees	See section	Lag/lead
0	120	240	7.2	Lagging
30	150	270	7.3	Lagging
30	270	150	7.4	Leading

Copyright © 2001 IEEE. All rights reserved.

Copyright The Institute of Electrical and Electronics Engineers, Inc.
Provided by IHS under license with IEEE
No reproduction or networking permitted without license from IHS
Not for Resale