IEEE Std C57.12.60-1998
(Revision of
IEEE Std C57.12.60-1992)

IEEE Guide for Test Procedures for Thermal Evaluation of Insulation Systems for Solid-Cast and Resin-Encapsulated Power and Distribution Transformers

Sponsor

**Transformers Committee
of the
IEEE Power Engineering Society**

Approved 9 March 1998

IEEE-SA Standards Board

Abstract: A uniform method is established for determining the temperature classification of solid-cast and resin-encapsulated power and distribution transformer insulation systems by testing rather than by chemical composition. These insulation systems are intended for use in transformers covered by IEEE Std C57.12.01-1989 and IEEE Std C57.12.91-1995 as they apply to solid-cast and resin-encapsulated transformers whose highest voltages exceed nominal 600 V.
Keywords: insulation systems, model transformer coils, resin-encapsulated transformers, solid-cast transformers, thermal evaluation

---

The Institute of Electrical and Electronics Engineers, Inc.
345 East 47th Street, New York, NY 10017-2394, USA

Copyright © 1998 by the Institute of Electrical and Electronics Engineers, Inc.
All rights reserved. Published 1998. Printed in the United States of America.

ISBN 0-7381-0199-0

No part of this publication may be reproduced in any form, in an electronic retrieval system or otherwise, without the prior written permission of the publisher.

--`,,`-`-`,,`,,`,`,,`---

Copyright The Institute of Electrical and Electronics Engineers, Inc.
Provided by IHS under license with IEEE
No reproduction or networking permitted without license from IHS

Not for Resale

IEEE Standards documents are developed within the IEEE Societies and the Standards Coordinating Committees of the IEEE Standards Association (IEEE-SA) Standards Board. Members of the committees serve voluntarily and without compensation. They are not necessarily members of the Institute. The standards developed within IEEE represent a consensus of the broad expertise on the subject within the Institute as well as those activities outside of IEEE that have expressed an interest in participating in the development of the standard.

Use of an IEEE Standard is wholly voluntary. The existence of an IEEE Standard does not imply that there are no other ways to produce, test, measure, purchase, market, or provide other goods and services related to the scope of the IEEE Standard. Furthermore, the viewpoint expressed at the time a standard is approved and issued is subject to change brought about through developments in the state of the art and comments received from users of the standard. Every IEEE Standard is subjected to review at least every five years for revision or reaffirmation. When a document is more than five years old and has not been reaffirmed, it is reasonable to conclude that its contents, although still of some value, do not wholly reflect the present state of the art. Users are cautioned to check to determine that they have the latest edition of any IEEE Standard.

Comments for revision of IEEE Standards are welcome from any interested party, regardless of membership affiliation with IEEE. Suggestions for changes in documents should be in the form of a proposed change of text, together with appropriate supporting comments.

Interpretations: Occasionally questions may arise regarding the meaning of portions of standards as they relate to specific applications. When the need for interpretations is brought to the attention of IEEE, the Institute will initiate action to prepare appropriate responses. Since IEEE Standards represent a consensus of all concerned interests, it is important to ensure that any interpretation has also received the concurrence of a balance of interests. For this reason, IEEE and the members of its societies and Standards Coordinating Committees are not able to provide an instant response to interpretation requests except in those cases where the matter has previously received formal consideration.

Comments on standards and requests for interpretations should be addressed to:

Secretary, IEEE-SA Standards Board
445 Hoes Lane
P.O. Box 1331
Piscataway, NJ 08855-1331
USA

Note: Attention is called to the possibility that implementation of this standard may require use of subject matter covered by patent rights. By publication of this standard, no position is taken with respect to the existence or validity of any patent rights in connection therewith. The IEEE shall not be responsible for identifying patents for which a license may be required by an IEEE standard or for conducting inquiries into the legal validity or scope of those patents that are brought to its attention.

Authorization to photocopy portions of any individual standard for internal or personal use is granted by the Institute of Electrical and Electronics Engineers, Inc., provided that the appropriate fee is paid to Copyright Clearance Center. To arrange for payment of licensing fee, please contact Copyright Clearance Center, Customer Service, 222 Rosewood Drive, Danvers, MA 01923 USA; (978) 750-8400. Permission to photocopy portions of any individual standard for educational classroom use can also be obtained through the Copyright Clearance Center.

Copyright The Institute of Electrical and Electronics Engineers, Inc.
Provided by IHS under license with IEEE
No reproduction or networking permitted without license from IHS
Not for Resale

Introduction

(This introduction is not part of IEEE Std C57.12.60-1998, IEEE Guide for Test Procedures for Thermal Evaluation of Insulation Systems for Solid-Cast and Resin-Encapsulated Power and Distribution Transformers.)

This guide was developed to provide a method for evaluating insulation systems for solid-cast and resin-encapsulated transformers with high-voltage ratings greater than 600 V. Since these procedures are considered to be new, and have not been tested exhaustively, further testing may prove the need for future revisions.

The working group that developed this guide used IEEE Std C57.12.56-1986, IEEE Standard Test Procedure for Thermal Evaluation of Insulation Systems for Ventilated Dry-Type Power and Distribution Transformers, as a starting point. New material and coil design techniques have necessitated an expansion of the procedure to recognize factors such as the effect of glass transition temperature, higher resin-to-air and resin-to-metal ratios, filler contents, and conductor identity on aging and performance characteristics. This guide describes methods that take these new materials and processes into account.

The working group was unable to define an existing insulation system that could be used as a control for comparison with an insulation system under test. Therefore, an arbitrary extrapolation criteria of 40 000 h was selected for the evaluation. The working group urges the dry-type transformer industry to report results of tests performed with this new procedure in order to provide a basis for the future improvement of this guide.

The working group considered aging under voltage stresses that might cause partial discharge at operating voltage, but ruled it out because present transformer designs are generally created to be as free as practical of partial discharges at operating voltage. If partial discharges are present, the possibility exists that such an endpoint could be an alternate approach to dielectric strength endpoints. This should be considered if data become available.

The working group also considered a vibration and shock procedure as one of the aging factors. So little information is published regarding the effects of vibration and shock in high-voltage insulation systems, however, that it was impossible to include it in the test procedure. The working group urges the industry to report procedures and results of any testing of insulation systems that uses vibration and shock so that future revisions of this guide may incorporate these factors, if they are found to be significant.

This guide relates voltage withstand endpoint criteria to the impulse voltage distribution within the coil or to the initial voltage withstand of the coil. A relationship between impulse withstand of the insulation and short-term 60 Hz withstand is identified so that 50/60 Hz testing of model coils is possible.

Since the working group was unable to define an existing insulation system to use as a control for comparison with the insulation system under test, and no data has been forthcoming to verify the techniques outlined in this document, it was recommended that this document be considered a guide.

At the time that this guide was completed, the Working Group of the Dry-Type Transformer Subcommittee of the Transformers Committee of the IEEE Power Engineering Society had the following membership:

R. L. Provost, *Chair*

D. A. Barnard	A. J. Jonnatti	L. W. Pierce
P. W. Clarke	A. D. Kline	J. Puri
V. Dahinden	R. P. Marek	D. R. Purohit
J. M. Frank	M. I. Mitelman	M. Rajadhyaksha
M. E. Haas	W. E. Morehart	M. F. Schacker
C. W. Johnson, Jr.	W. F. Patterson, Jr.	R. W. Simpson, Jr.

Copyright © 1998 IEEE. All rights reserved.

Copyright The Institute of Electrical and Electronics Engineers, Inc.
Provided by IHS under license with IEEE
No reproduction or networking permitted without license from IHS
Not for Resale

The following persons were on the balloting committee:

Edward J. Adolphson
George Allen
Stephen Antosz
J. Arteaga
Donald E. Ballard
David A. Barnard
Mike Barnes
A. Bartek
Edward A. Bertolini
Wallace B. Binder
Max A. Cambre
Don Chu
Jerry L. Corkran
Dieter Dohnal
Randall L. Dotson
Richard F. Dudley
Saurabh Ghosh
James L. Goudie
Richard D. Graham
Robert L. Grunert
Michael E. Haas
Norman K. Haggerty
N. Wayne Hansen
Philip J. Hopkinson
Richard Huber
A. F. Hueston
John S. Hurst
Virendra Jhonsa
Charles W. Johnson
Anthony Jonnatti
Edward W. Kalkstein
Egon Koenig
George Krause
John G. Lackey
Tim Lewis
William A. Maguire
Charles Mandeville
Richard P. Marek
John W. Matthews
L. Bruce McClung
Jack W. McGill
Nigel P. McQuin
W. E. Morehart
Chuck R. Murray
William H. Mutschler, Jr.
Carl G. Niemann
T. V. Oommen
Klaus Papp
Dhiru S. Patel
Paulette A. Payne
Linden W. Pierce
Donald W. Platts
Richard L. Provost
Jeewan L. Puri
D. R. Purohit
Charles T. Raymond
Arlise L. Robinson, Jr.
John R. Rossetti
Hazairin Samaulah
Subhas Sarkar
Leo J. Savio
William E. Saxon
Michael Schacker
Wes W. Schwartz
Devki N. Sharma
Vic Shenoy
Mark Siehling
R. William Simpson, Jr.
Tarkeshwar Singh
Ken Skinger
James E. Smith
John C. Sullivan
James A. Thompson
Subhash C. Tuli
Robert Whearty
Roger Wicks
William G. Wimmer

When the IEEE-SA Standards Board approved this guide on 19 March 1998, it had the following membership:

Richard J. Holleman, *Chair* **Donald N. Heirman,** *Vice Chair*
Judith Gorman, *Secretary*

Satish K. Aggarwal
Clyde R. Camp
James T. Carlo
Gary R. Engmann
Harold E. Epstein
Jay Forster*
Thomas F. Garrity
Ruben D. Garzon
James H. Gurney
Jim D. Isaak
Lowell G. Johnson
Robert Kennelly
E. G. "Al" Kiener
Joseph L. Koepfinger*
Stephen R. Lambert
Jim Logothetis
Donald C. Loughry
L. Bruce McClung
Louis-François Pau
Ronald C. Petersen
Gerald H. Peterson
John B. Posey
Gary S. Robinson
Hans E. Weinrich
Donald W. Zipse

*Member Emeritus

Valerie E. Zelenty
IEEE Standards Project Editor

Copyright © 1998 IEEE. All rights reserved.
Copyright The Institute of Electrical and Electronics Engineers, Inc.
Provided by IHS under license with IEEE
No reproduction or networking permitted without license from IHS
Not for Resale

Contents

1. Overview 1

1.1 Scope 1
1.2 Purpose 1

2. References 2

3. Basic considerations 2

3.1 General 2
3.2 Intent of test methods 2
3.3 Aging factors 3
3.4 Data treatment 3

4. Test procedures 3

4.1 General 3
4.2 Test models 5
4.3 Screening 7
4.4 Test cycles 7
4.5 Temperature aging 8
4.6 Cold shock 9
4.7 Humidity conditioning 10
4.8 Dielectric tests 10

5. Reporting 13

Annex A (informative) Bibliography 15

Copyright © 1998 IEEE. All rights reserved.

Copyright The Institute of Electrical and Electronics Engineers, Inc.
Provided by IHS under license with IEEE
No reproduction or networking permitted without license from IHS
Not for Resale

IEEE Guide for Test Procedures for Thermal Evaluation of Insulation Systems for Solid-Cast and Resin-Encapsulated Power and Distribution Transformers

1. Overview

1.1 Scope

This test procedure is intended to establish a uniform method for determining the temperature classification of solid-cast and resin-encapsulated power and distribution transformer insulation systems by testing rather than by chemical composition.

These insulation systems are intended for use in transformers covered by IEEE Std C57.12.01-1989[1] and IEEE Std C57.12.91-1995 as they apply to solid-cast and resin-encapsulated transformers whose highest voltages exceed nominal 600 V.

NOTE—In this guide, the term *transformer* means solid-cast and resin-encapsulated transformer, unless qualified by other descriptive terms.

1.2 Purpose

The purpose of this test procedure is to establish a uniform method for

a) Providing data for the selection of the temperature classification of the insulation system;
b) Providing data that may be used as a basis for a loading guide;
c) Comparative evaluation of different insulation systems.

[1]Information on references can be found in Clause 2.

Copyright © 1998 IEEE. All rights reserved.

Copyright The Institute of Electrical and Electronics Engineers, Inc.
Provided by IHS under license with IEEE
No reproduction or networking permitted without license from IHS
Not for Resale

2. References

This guide shall be used in conjunction with the following publications.

ASTM E104-85(1991)e1, Standard Practice for Maintaining Consistent Relative Humidity by Means of Aqueous Solutions.[2]

IEEE Std 1-1986 (Reaff 1992), IEEE Standard General Principles for Temperature Limits in the Rating of Electric Equipment and for the Evaluation of Electrical Insulation.[3]

IEEE Std 4-1995, IEEE Standard Techniques for High-Voltage Testing.

IEEE Std 101-1987 (Reaff 1995), IEEE Guide for the Statistical Analysis of Thermal Life Test Data.

IEEE Std C57.12.01-1989, IEEE Standard General Requirements for Dry-Type Distribution and Power Transformers Including Those With Solid-Cast and/or Resin-Encapsulated Windings.[4]

IEEE Std C57.12.56-1986 (Reaff 1993), IEEE Standard Test Procedure for Thermal Evaluation of Insulation Systems for Ventilated Dry-Type Power and Distribution Transformers.

IEEE Std C57.12.58-1991 (Reaff 1996), IEEE Guide for Conducting a Transient Voltage Analysis of a Dry-Type Transformer Coil.

IEEE Std C57.12.91-1995, IEEE Standard Test Code for Dry-Type Distribution and Power Transformers.

3. Basic considerations

3.1 General

Two test methods have been developed to provide a means for evaluating insulation systems as a function of thermal aging. They are an extension of IEEE Std C57.12.56-1986.

One test method is based on the retention of dielectric withstand voltage equal to a percentage of the initial 50/60 Hz dielectric withstand capability of the test sample. The other test method is based on the retention of the basic impulse insulation level by impulse testing, or by related 50/60 Hz voltage withstand capability tests on models (see 4.8).

NOTE—Impulse tests are simulated in these methods because the transient responses of models generally are not representative of those found in full-size transformers.

3.2 Intent of test methods

The intent of these test methods is to have each component of the insulation system tested under conditions that are, as nearly as possible, the same as the conditions in the actual transformer. Thus, each of the components is evaluated in accordance with its actual function.

---

[2]ASTM publications are available from the American Society for Testing and Materials, 100 Barr Harbor Drive, West Conshohocken, PA 19428-2959, USA.

[3]IEEE publications are available from the Institute of Electrical and Electronics Engineers, 445 Hoes Lane, P.O. Box 1331, Piscataway, NJ 08855-1331, USA.

[4]IEEE Std C57.12.01-1989 has been withdrawn; however, copies can be obtained from Global Engineering, 15 Inverness Way East, Englewood, CO 80112-5704, USA, tel. (303) 792-2181.

Copyright © 1998 IEEE. All rights reserved.
Copyright The Institute of Electrical and Electronics Engineers, Inc.
Provided by IHS under license with IEEE
No reproduction or networking permitted without license from IHS
Not for Resale

3.3 Aging factors

The primary aging factors shall be temperature and time. Although the primary aging factors are temperature and time, the criterion of failure of these high-voltage insulation systems is assumed to be voltage related to the initial dielectric strength or to the rated basic impulse voltage level. With experience, other criteria (e.g., partial discharge change, power factor change, etc.) should be considered. Therefore, the time-to-failure of the system is determined during the accelerated thermal aging by its ability to withstand prescribed proof-test voltages applied after each thermal aging cycle (see 4.8).

The Arrhenius relationship is the theoretical basis for this test procedure.

Test methods specified in this test procedure are of an accelerated nature. Therefore, an Arrhenius extrapolation of the time-to-failure obtained at the test temperatures (log of life vs. 1/absolute temperature) is required in order to obtain the temperature classification for normal operation. As the conditions of this accelerated testing are unusually severe, extrapolation of the data will indicate a shorter time-to-failure than would be obtained in actual service use. Due to the lack of a universally accepted standard transformer insulation system, it is not possible to compare insulation systems with a standard system via the Arrhenius approach. It is expected that the extended use of this procedure will make such a comparison possible. Until then, a reference time of 40 000 h to failure shall be used as a minimum acceptable basis for establishing a temperature classification. See item c) 4) in Clause 5.

3.4 Data treatment

In order to ensure that valid results are obtained that are free of bias and suitable for comparative studies, the test data shall be reduced statistically and the results shall be reported according to Clause 5.

Tests shall be carried out in accordance with Method 1, described in 4.1.1; however, Method 2, described in 4.1.2, may be used where applicable.

Extrapolations indicated in Clause 5 shall be applied only for failures that occur in the same part of the insulating system. If failures occur in more than one part of the system, data for each mode of failure shall be treated separately. Similarly, the temperature classification shall be determined by separate extrapolation for each mode of failure, and the lowest extrapolated temperature obtained shall be used as representing the temperature rating for the complete system.

4. Test procedures

4.1 General

4.1.1 Method 1

This method shall be used when complete information is not available regarding thermal degradation characteristics of the insulating system involved. At least three samples (when using full-size coils), or at least 12 samples (when using representative models), in addition to control samples used for temperature monitoring, shall be tested at each of three (or more) different temperatures. Suggested temperatures are given in Table 1. Details of model construction and test procedure are covered in 4.2 through 4.8.

Copyright © 1998 IEEE. All rights reserved.

Copyright The Institute of Electrical and Electronics Engineers, Inc.
Provided by IHS under license with IEEE
No reproduction or networking permitted without license from IHS Not for Resale

Table 1—Temperature and exposure time guide

Estimated time per cycle (in hours)	Hottest-spot temperature (in °C) or equivalent for system expected to operate at temperature class					
	105	**130**	**150**	**185**	**220**	**250**
300	135	165	195	225	275	310
100	150	180	215	245	300	340
35	165	200	235	270	325	375

4.1.2 Method 2

This method is applicable when thermal degradation characteristics are known to be expressible by the following adaptation of the Arrhenius rate equation:

$$L = A\ \mathrm{e}^{b/T} \tag{1}$$

where

L is the time to failure (h);
A is a constant representing the intercept of the "life" line of the Arrhenius plot with its ordinate;
b is the rate factor in the time-to-failure temperature relationship dependent upon the insulation system involved and representing the slope of the Arrhenius plot;
T is the absolute temperature.

A and b are known from previous tests performed in accordance with Method 1 (see 4.1.1). In this case, only one group of samples (n = samples) needs to be tested at one temperature value, T_2 (in °K). Extrapolation may be carried out by Equation (2).

$$T_1 = \frac{b}{\ln\left(\frac{L_1}{\overline{L_2}}\right) + \left(\frac{b}{T_2}\right)} \tag{2}$$

where

T_1 is the temperature limit [in °K (°C + 273)], to give time-to-failure expectancy equal to or greater than L_1 (L_1 = 40 000 h);
ln is the natural logarithm to the base e = 2.718;
$\overline{L_2}$ is the average value of time-to-failure at test temperature, T_2 (it is expressed in the same units as L_1);
L_2 is the measured time-to-failure (see 4.5) obtained on samples at the test temperature and used to calculate L_2 per Equation (3).

Copyright © 1998 IEEE. All rights reserved.
Copyright The Institute of Electrical and Electronics Engineers, Inc.
Provided by IHS under license with IEEE
No reproduction or networking permitted without license from IHS
Not for Resale

$$\overline{L_2} = \frac{L_{2(1)} + L_{2(2)} + L_{2(3)} + ...L_{2(n)}}{n} \quad (3)$$

where

n is the number of samples at temperature, T_2.

4.2 Test models

4.2.1 Model design considerations

Test models may consist of one of the following alternatives:

a) *Full-size transformer coils*. Test models may be actual full-size transformers, modified to permit testing of the possible modes of failure. These coils shall be selected to represent the standard full-size coils intended for commercial use. After screening (4.3), the coils will be tested to determine their functional life through the accelerated aging process at elevated temperatures. Since full-size transformer coils are physically large and extremely expensive to produce, groups of four sample coils shall be tested at no less than three different temperatures. One coil in each set of four shall be designated as the control coil.

b) *Representative model coils*. Recognizing the high cost of producing and testing full-size transformer coils, representative model coils of the insulation system may be used for this evaluation. In order to provide an accurate evaluation of the thermal aging effects on transformer insulation life, the representative model must accomplish the following:

   1) Represent the critical insulation system that (due to thermal degradation) can deteriorate the electrical integrity of the transformer windings.

   2) Simulate realistic voltage stresses (impulse or low frequency) for determining the end of functional life of the winding insulation system after the thermal aging process.

In cast coil designs, the turn-to-turn and winding layer-to-layer insulation systems meet the above requirements and, therefore, must be simulated in representative models for establishing the thermal rating of the insulation system.

The characteristics of the cast coil insulation systems that operate in series or in parallel with air gaps (e.g., axial coil edge-to-ground separation, radial coil-to-coil separation, and axial winding section-to-section separation—see Figure 1) depend mainly on air for their insulation strength. These insulation system elements do not degrade significantly by thermal aging of the epoxy insulation. These insulation system elements, therefore, may not be simulated in the representative insulation model.

After screening (4.3), the representative models shall be tested for determining their functional life through the accelerated aging process at elevated temperatures. Since representative models can be made relatively small in size and lower in cost than full-size coils, groups of 12 samples of each shall be tested at no less than three different temperatures. All the samples shall be clearly marked for identification as shown in Table 2.

Copyright © 1998 IEEE. All rights reserved.

Copyright The Institute of Electrical and Electronics Engineers, Inc.
Provided by IHS under license with IEEE
No reproduction or networking permitted without license from IHS Not for Resale

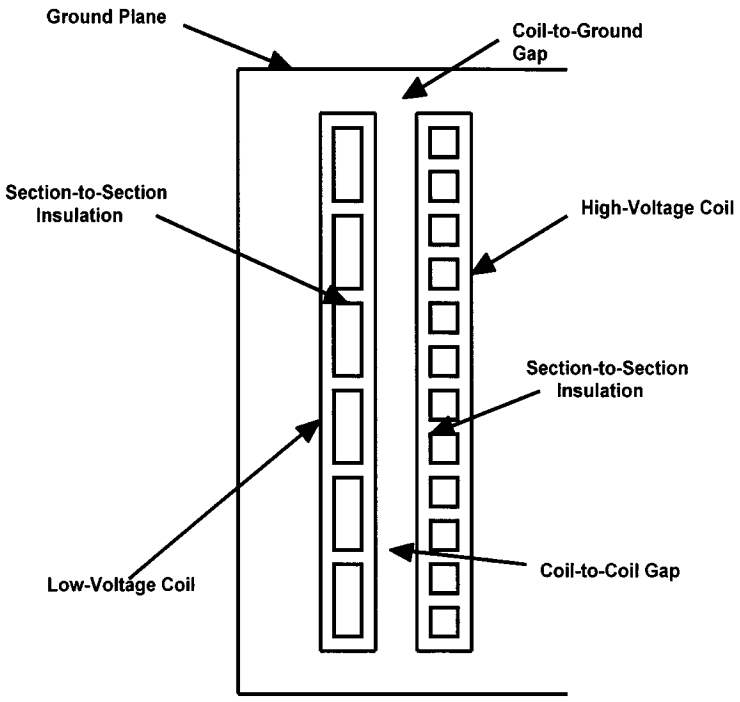

Figure 1—Cross-section of cast coil insulation system

Table 2—Model coil designation

Group number	Sample number	Temperature[a]
I	1–12	A
II	13–24	B
III	25–36	C

[a]Refer to Table 1.

4.2.2 Representative model construction

Based on the above principles, the models shall be designed with two layers of a representative size of coil conductors, encased inside the cast winding insulation as shown in Figure 2.

Copyright © 1998 IEEE. All rights reserved.
Copyright The Institute of Electrical and Electronics Engineers, Inc.
Provided by IHS under license with IEEE
No reproduction or networking permitted without license from IHS
Not for Resale

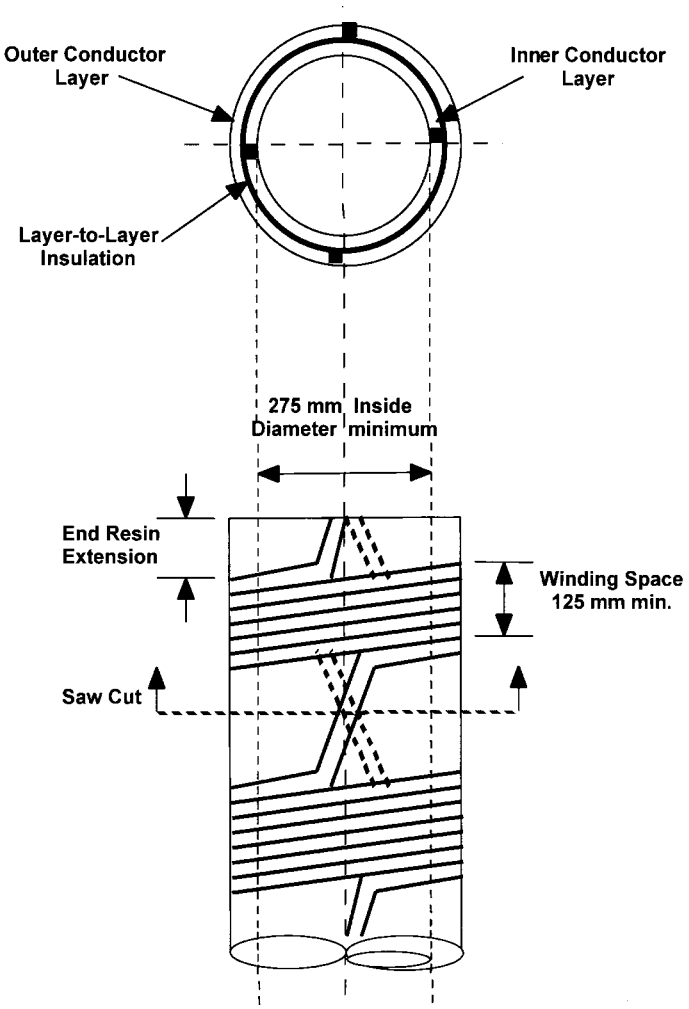

Figure 2—Sample model construction

4.3 Screening

Prior to exposure to an elevated temperature on the first test cycle, dielectric screening tests shall be made on all samples (see 4.8). The initial screening tests shall include exposure to cold shock and humidity, and shall be made in accordance with items b) and c) in 4.4 prior to initial screening dielectric testing. Samples that are not passed in the screening test shall not be used.

4.4 Test cycles

The test procedure shall consist of subjecting the test samples to repeated test cycles following an initial screening test (see 4.3). Each test cycle shall consist of the following parts and shall be performed in the following order:

a) *Temperature aging* —details in 4.5
b) *Cold shock* —details in 4.6
c) *Humidification* —details in 4.7
d) *Dielectric test under humid condition*—details in 4.8

Copyright © 1998 IEEE. All rights reserved.

Copyright The Institute of Electrical and Electronics Engineers, Inc.
Provided by IHS under license with IEEE
No reproduction or networking permitted without license from IHS Not for Resale

4.5 Temperature aging

Exposure to elevated temperature may be accomplished by circulating electric current in the windings of the test sample, by the use of suitable ovens, or by combinations thereof.

It is recommended that circulating electric current be used for the aging of full-size transformer coils, and suitable hot air ovens be used for the aging of representative model coils.

4.5.1 Aging by circulating electric current

Where exposure to elevated temperature is accomplished by circulating electric current in the windings of the test sample, corresponding electrical elements of all samples (e.g., all of the high-voltage windings and also all of the low-voltage windings) shall be connected in series to have the same current circulated in the like elements. It should be noted that the separate current sources may be necessary for the high-voltage and low-voltage windings. Means for making small adjustments to the current through individual samples may be provided to aid in achieving the desired temperatures. Individual enclosures for the test models may be used to maintain test temperatures. However, the physical arrangement of the samples with respect to each other shall be such as to promote equality of temperature in all samples.

Any suitable method may be used for monitoring the temperature of the samples during the temperature exposure. The following method is recommended.

One group of test samples shall be equipped with thermocouples and shall be used for temperature monitoring purposes only. The number and location of thermocouples shall be such as to give an accurate indication of the hottest-spot temperature and an adequate knowledge of the temperature distribution within the sample in order to satisfy the conditions specified below.

The temperatures in all samples shall be monitored by one or more thermometers or thermocouples located on each sample. The relative position of the thermometers or thermocouples shall be the same for all samples. The monitored temperatures on individual test samples shall not be over 2 °C lower than that of the corresponding monitored points in the control model.

Test temperatures shall be maintained constant at the hottest spots within the sample as measured by the monitoring thermocouples. Thus, the hottest-spot temperature of each of the windings is the same. At other points within the sample, deviation from this temperature is permissible, although such deviation shall be within the limits of the temperature distribution in the actual transformer.

The heat-up rate of the test samples should be controlled and monitored to prevent premature coil cracking. It should be cautioned, however, that an excessive heat-up time will add aging time to the samples that will not be included in the total aging time. The temperature aging cycle shall commence only when the required hottest-spot temperature is established and shall terminate when the cool-down period starts.

Temperature exposure shall be conducted in a relatively clean, draft-free area, and the samples may be covered to exclude dirt.

4.5.2 Aging by hot air ovens

Each group of samples shall be thermally aged in a separate hot-air-circulating oven that has been stabilized at the prescribed temperature. The samples shall be kept in these ovens for the known durations (cycles) before further treatments.

One unmarked sample (control sample) in each oven shall be equipped with a thermocouple to determine the temperature of all the samples in that oven, and shall be used for monitoring purposes only. This control sample is in addition to the 12 test samples. It is recommended that the oven be large enough to hold all 13

Copyright © 1998 IEEE. All rights reserved.
Copyright The Institute of Electrical and Electronics Engineers, Inc.
Provided by IHS under license with IEEE
No reproduction or networking permitted without license from IHS
Not for Resale

sample coils. The oven temperature uniformity shall be monitored to determine variability according to ASTM D5374-93 [B3].[5] The oven shall have a degree of uniformity of ± 2 °C among the measured points in the oven at temperatures under 300 °C, and ± 3 °C for temperatures over 300 °C.

The aging cycle will begin only when the monitored control sample has reached the prescribed aging temperature. The aging cycle will terminate at the point in time when the control sample drops more than 3 °C below the aging temperature. This would occur when the oven doors are opened and/or when the oven is turned off.

4.5.3 Aging temperatures and cycle time

Regardless of the method of aging used, the following guidelines shall be used.

The hottest-spot test temperature, once established, shall be maintained as a minimum value. No upper temperature tolerance is established. It should be noted, however, that excessive temperature variation in a positive direction will give pessimistic life curves.

Temperatures shall be recorded periodically to determine the average temperature during the temperature exposure cycle. Aging temperature and duration of each temperature cycle shall be selected so as to require 5–10 cycles to reach the average time-to-failure for a group of samples. When several groups of samples are tested at different temperatures, the duration of test cycles for different groups shall be selected so as to require approximately the same number of cycles to average failure.

Tests on any one group of samples shall be made at the same aging temperature until failure occurs. Table 1 will serve as a guide to the selection of test temperatures; however, other combinations of time and temperature may be used to fit the degradation characteristics of the particular insulation system. If samples have not failed at the end of seven cycles, the aging period of the following cycles may be extended to not more that twice the previous time cycle. If a failure occurs by the end of the fourth cycle, the aging period of the following cycles may be decreased to not less than one half of the previous cycle time.

The various temperature and times shown in Table 1 do not describe any actual insulation system but are intended only as a guide in selecting aging temperature and times. The Table 1 temperatures and times cannot be expected to yield the same endpoints for all insulation systems.

Temperature exposure shall be conducted in a relatively clean, draft-free area, and the samples shall be covered to exclude dirt.

The time of failure of a sample, aged at one temperature, shall be considered to be equal to the cumulative duration of temperature exposure during all test cycles (see 4.4) less one-half of the length of the last cycle.

4.6 Cold shock

After thermal aging, the test sample is allowed to cool to room temperature. It is then placed in a suitable container until the sample temperature is –30 °C. After reaching –30 °C, the sample is allowed to warm up to room temperature and is then subjected to the humidification cycle.

For full-size coils, the temperature is determined either by resistance measurement of the windings or by appropriately placed and grounded thermocouples, which should measure the internal temperature of the coil. For representative model coils, the temperature of the control sample, measured by thermocouple, shall be used to determine the temperature of all the test samples of a given set of 12. This requires that the control sample be placed in the cooling chamber along with the test samples.

[5]The numbers in brackets correspond to those of the bibliography in Annex A.

Copyright © 1998 IEEE. All rights reserved.

Copyright The Institute of Electrical and Electronics Engineers, Inc.
Provided by IHS under license with IEEE
No reproduction or networking permitted without license from IHS
Not for Resale

4.7 Humidity conditioning

Exposure to humidity shall be made with the sample de-energized, under the following conditions:

a) Sample shall be allowed to return to room temperature prior to humidification.
b) Duration of humidity exposure shall be 48 h, minimum.
c) For the humidity exposure, the test samples shall be placed in a suitable enclosure in which a relative humidity of not less than 90% shall be maintained.

As a method of maintaining this humidity, the bottom of the test chamber may be covered with a flat tray containing a saturated salt solution (see ASTM E104-85, Method A or C, for complete details). The chamber shall be provided with a blower or a fan for internal circulation and shall be lined with an effective vapor barrier material (e.g., aluminum foil). The humidification temperature shall be maintained within the range of 25–40 °C.

4.8 Dielectric tests

4.8.1 General

Initial screening and periodic endpoint dielectric tests shall be conducted according to Method A, B, or C, as applicable. These methods are described in 4.8.2 through 4.8.4. Dielectric tests shall be applied while the samples are in the humid condition. These samples may be removed from the humidity chamber prior to the test, in which case all dielectric tests shall be completed within 2 h after removal. The order of the tests shall be as follows:

a) Turn-to-turn insulation;
b) Winding-to-winding or winding-to-ground (when applicable);
c) Layer-to-layer insulation.

When the initial capability, screening, and periodic endpoint tests are performed at 50/60 Hz, test voltages shall be essentially sinusoidal. Screening and periodic endpoint test voltages (50/60 Hz) shall be applied for a duration of 2 s. For the definition of “essentially sinusoidal,” see IEEE Std 4-1995. The tests shall be conducted using a suitable 500 VA or larger transformer whose output is essentially sinusoidal and can be varied. A smaller capacity transformer may be used if the voltage is measured at the output of the test transformer either directly or through a suitable potential transformer or capacitance voltage divider. The test voltage should be started at one-quarter or less of the full value and should be brought up to full value in not more than 15 s. At the end of the test period (2 s), the voltage shall be reduced to one-quarter value or less in not more than 5 s before the circuit is opened. A relief gap set at a voltage that is 10% or more in excess of the specified test voltage may be connected during the 50/60 Hz tests.

A collapse of voltage or the inability to maintain voltage shall indicate dielectric failure.

NOTE—ASTM D149-97a [B2] suggests that the tripping of a circuit breaker in the primary of the test transformer may be used to indicate breakdown. The circuit breaker should be set to trip if the current flowing through the failure and the secondary of the transformer exceeds 50 mA; however, on larger size models, the reactive component of the current may be greater that 50 mA, in which case a circuit breaker with a higher trip setting should be used.

4.8.2 Method A

From a transient voltage analysis (see IEEE Std C57.12.58-1991) of full-size transformer windings of the type being evaluated, determine the maximum percent of the rated full-wave impulse (BIL) voltage that would be experienced for each potential failure mode represented (i.e., turn-to-turn, layer-to-layer, etc.); see IEEE Std C57.98-1993 [B10].

--`,,`-`-`,,`,,`,`,,`---

Copyright © 1998 IEEE. All rights reserved.
Copyright The Institute of Electrical and Electronics Engineers, Inc.
Provided by IHS under license with IEEE
No reproduction or networking permitted without license from IHS
Not for Resale

The maximum percentage of the full-wave impulse voltage appearing at the various failure-mode points can be determined from voltage probe measurements made at the points during the transient analysis. The maximum percent voltage can occur as a result of either the initial distribution of the impulse voltage throughout the winding or the resonant voltage that is a response of the network to the impulse voltage. The maximum turn-to-turn impulse voltage is usually experienced near the line end of the coil or near the neutral end of the coil. The maximum layer-to-layer voltage is usually experienced between the first and second layers from a terminal of a section type of winding or from the first to second layer from a terminal of a barrel winding. The maximum section-to-section voltage is usually experienced from the first to the second section or from the second to the third section from a terminal. The maximum section-to-ground voltage is usually experienced from a terminal section-to-ground. The maximum winding-to-ground voltage is usually experienced either from the terminal section-to-ground or, in the case of a barrel winding, from the terminal layer-to-ground. For a continuous-disc winding, the maximum voltage with respect to ground usually occurs at the 6th through 12th sections from a line terminal. It is usually necessary to make a number of experimental probe measurements by use of the transient analysis equipment to determine the maximum possible voltage for each failure mode.

The impulse voltage that is determined in this manner is then converted to a 50/60 Hz equivalent voltage. Seventy-five percent of this 50/60 Hz voltage is then used for the tests on both aged and unaged samples as shown below (except for turn-to-turn in the 120 V class).

The 50/60 Hz screening tests on unaged models and the periodic endpoint tests on the aged models for each mode of failure shall be made at voltage as determined from the following:

a) Turn-to-turn voltage shall be the greater of 120 V or the following equation:

$$\frac{(\text{Max\%} \times \text{FWkV})(1000)(0.707)(0.75)}{1.1 \times 100}\text{volts} \tag{4}$$

where

Max% is the maximum percentage of the full-wave voltage appearing at the failure mode point;
FWkV is the full-wave impulse voltage (kV).

Higher voltage may be used at the manufacturer's option.

b) Winding-to-winding or winding-to-ground voltage shall be the following:

1) For a rated winding full-wave basic impulse insulation level of 60 kV or less:

$$\frac{(\text{Max\%} \times \text{FWkV})(1000)(0.707)(0.75)}{1.1 \times 100}\text{volts} \tag{5}$$

2) For a rated winding full-wave basic impulse insulation level of greater than 60 kV:

$$\frac{(\text{Max\%} \times \text{FWkV})(1000)(0.707)(0.75)}{1.1 \times 100}\text{volts} \tag{6}$$

c) For all other modes of potential failure, such as section-to-section, layer-to-layer, etc., voltage shall be

$$\frac{(\text{Max\%} \times \text{FWkV})(1000)(0.707)(0.75)}{1.1 \times 100}\text{volts} \tag{7}$$

Copyright © 1998 IEEE. All rights reserved.

Copyright The Institute of Electrical and Electronics Engineers, Inc.
Provided by IHS under license with IEEE
No reproduction or networking permitted without license from IHS Not for Resale

4.8.2.1 Alternate method

As an alternate method, screening and endpoint tests may be performed using 1.2 × 50 μs positive full-wave impulses (see ANSI C68.1-1968 [B1]) or a combination of 50/60 Hz turn-to-turn tests and impulse tests for all other tests points as follows:

a) For 50/60 Hz turn-to-turn tests, the voltage shall be as specified in 4.8.2 item a).
b) For impulse turn-to-turn tests, the voltage shall be the greater of 170 V peak or Equation (8). Higher voltage may be used at the manufacturer's option.
c) For all other test points, the test voltage shall be calculated by Equation (8).

$$\frac{(\text{Max}\% \times \text{FWkV})(1000)(0.75)}{100}\text{volts} \quad (8)$$

Once a test mode is established, it must be used until the work is completed.

4.8.3 Method B

This method shall be used for the testing of full-size transformer coils. The dielectric tests shall be conducted not more than 2 h after removing the coils from the humidification chamber. Screening tests on unaged coils and periodic endpoint tests on aged coils shall be made according to the following procedure. Three full-size transformer coils shall be subjected to a 1.2 × 50 μs positive full-wave impulse at 75% of the rated BIL. The wave shall be applied in accordance with IEEE Std 4-1995.

Each coil shall be tested on a core assembly with a secondary winding (non-cast). The impulse is to be applied to the start lead of the coil under test with the finish lead, core, and secondary grounded. The test shall be repeated by impulsing the finish lead of the coil under test, with the start lead, core, and secondary grounded.

Following the impulse test above, a double induced potential test is to be conducted at 150% of the rated secondary voltage for 7200 cycles at not less than 120 Hz.

If no failures occur, the coils are returned to the aging stand to begin a new aging cycle.

4.8.4 Method C

This method shall be used for the testing of representative model coils. The dielectric tests shall be conducted not more than 2 h after removing the coils from the humidification chamber.

The 12 test coils shall be subjected to specified voltage withstand tests as described in the following procedure. Test coils shall be subjected to a 1.2 × 50 μs positive full-wave impulse at 75% of the maximum anticipated BIL level of the projected commercial transformer winding designs that the models simulate.

The terminal connections (see Figure 3), sequence, and magnitude of impulse voltage application for each test sample shall be according to Table 3.

Copyright © 1998 IEEE. All rights reserved.
Copyright The Institute of Electrical and Electronics Engineers, Inc.
Provided by IHS under license with IEEE
No reproduction or networking permitted without license from IHS
Not for Resale

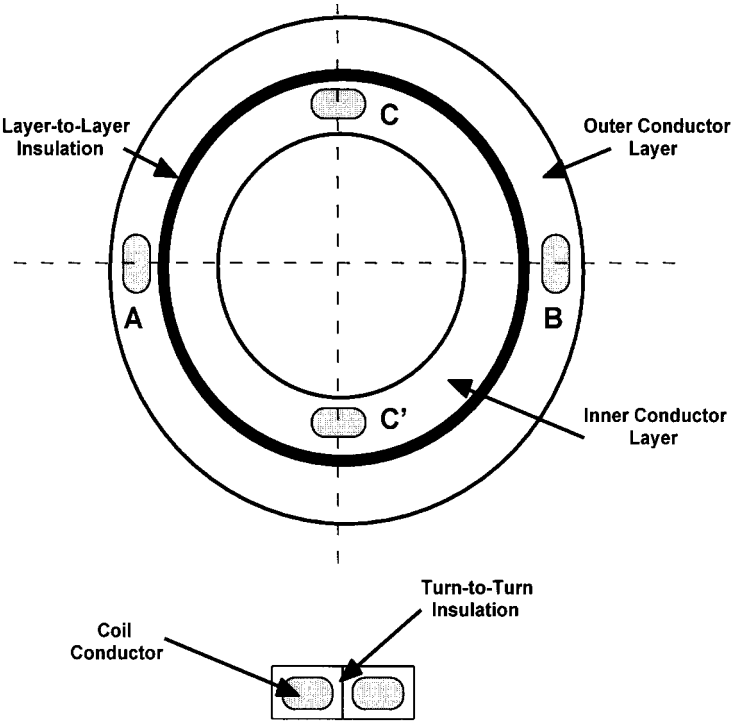

Figure 3—Terminal connections for a sample model

Table 3—Impulse voltage test connections

Test		Terminal connections	
Number	**Type**	**Ground**	**Energize**
1	Turn-to-turn	B	A
2	Layer-to-layer	A, B	C, C'

4.8.5 Test model failures

A test model whose insulation failed on any one of the tests is disqualified for any further tests. The remaining coils are placed back into the aging mode to begin the next cycle.

5. Reporting

Data shall be reduced statistically in accordance with IEEE Std 101-1987 for the purpose of establishing regression line only. The report of the results shall contain the following information:

a) Identification or description of the test specimens.

b) The duration of temperature exposure, expressed in terms of the total number of hours to failure, in accordance with 4.5. The number of test cycles shall be recorded.

Copyright © 1998 IEEE. All rights reserved.

Copyright The Institute of Electrical and Electronics Engineers, Inc.
Provided by IHS under license with IEEE
No reproduction or networking permitted without license from IHS Not for Resale

c) If the test procedure of Method 1 (see 4.1.1) is used, the report shall contain the following:

1) Calculated value of linearity. If the value is not suitable, additional data shall be obtained.

2) Tabulated value of time-to-failure vs. temperature calculated from the equation of the regression line.

3) A plot of these values on coordinate paper with logarithmic scale to present time-to-failure (in hours) on the ordinate and the reciprocal absolute temperature scaled to represent temperature (in °C) on the abscissa.

4) Extrapolated value of a temperature corresponding to a time-to-failure value of 40 000 h.

5) Temperature classification (in °C) of the insulation system. This shall be the temperature (in °C) nearest to, but less than, the value obtained by extrapolation above, secured from the list of temperature class values approved for this purpose by IEEE Std 1-1986.

d) If the test procedure of Method 2 (see 4.1.2) is used, the report shall contain the following:

1) Calculated average value of life of the samples (L_2).

2) Calculated temperature value to yield time-to-failure of L_1 = 40 000 h, using Equation (2).

3) Temperature class of the insulation system. This shall be the temperature nearest to, but less than, the value obtained by Equation (2), obtained from the list of temperature class values approved for this purpose by IEEE Std 1-1986.

Copyright © 1998 IEEE. All rights reserved.
Copyright The Institute of Electrical and Electronics Engineers, Inc.
Provided by IHS under license with IEEE
No reproduction or networking permitted without license from IHS
Not for Resale

Annex A

(informative)

Bibliography

[B1] ANSI C68.1-1968, American National Standard Techniques for Dielectric Testing.[6]

[B2] ASTM D149-97a, Standard Test Method for Dielectric Breakdown Voltage and Dielectric Strength of Solid Electrical Insulating Materials at Commercial Power Frequencies.

[B3] ASTM D5374-93, Standard Test Methods for Forced-Convection Laboratory Ovens for Evaluation of Electrical Insulation.

[B4] IEC 60216-1 (1990-06), Guide for the Determination of Thermal Endurance Properties of Electrical Insulating Materials—Part 1: General Guidelines for Ageing Procedures and Evaluation of Test Results.

[B5] IEEE Std 96-1969 (Reaff 1992), IEEE General Principles for Rating Electric Apparatus for Short-Term, Intermittent, or Varying Duty.

[B6] IEEE Std 97-1969, IEEE Recommended Practice for Specifying Service Conditions in Electrical Standards.[7]

[B7] IEEE Std 98-1984 (Reaff 1993), IEEE Standard for the Preparation of Test Procedures for the Thermal Evaluation of Solid Electrical Insulating Materials.

[B8] IEEE Std 99-1980 (Reaff 1992), IEEE Recommended Practice for the Preparation of Test Procedures for the Thermal Evaluation of Insulation Systems for Electric Equipment.

[B9] IEEE Std 943-1986 (Reaff 1992), IEEE Guide for Aging Mechanisms and Diagnostic Procedures in Evaluating Electrical Insulation Systems.

[B10] IEEE Std C57.98-1993, IEEE Guide for Transformer Impulse Tests.

[B11] IEEE Std C57.100-1986 (Reaff 1992), IEEE Standard Test Procedures for Thermal Evaluation of Oil-Immersed Distribution Transformers.

[B12] Manning, M. L., “The electrical insulation challenge for dry-type transformers,” *Insulation/Circuits,* vol. 19, no. 10, pp. 87–92, Sept. 1973.

[6]ANSI C68.1-1968 has been withdrawn; however, copies can be obtained from the Sales Department, American National Standards Institute, 11 West 42nd Street, 13th Floor, New York, NY 10036, USA.

[7]IEEE Std 97-1969 has been withdrawn; however, copies can be obtained from Global Engineering, 15 Inverness Way East, Englewood, CO 80112-5704, USA, tel. (303) 792-2181.

Copyright © 1998 IEEE. All rights reserved.

Copyright The Institute of Electrical and Electronics Engineers, Inc.
Provided by IHS under license with IEEE
No reproduction or networking permitted without license from IHS Not for Resale