# IEEE Guide for Conducting a Transient Voltage Analysis of a Dry-Type Transformer Coil

Sponsor
**Transformers Committee**
**of the**
**IEEE Power Engineering Society**

Approved 27 June 1991
Reaffirmed 12 June 2002

**IEEE Standards Board**

Approved 11 October 1991
Reaffirmed 6 February 1997

**American National Standards Institute**

**Abstract:** General recommendations for measuring voltage transients in dry-type distribution and power transformers are provide. Recurrent surge voltage generator circuitry, instrumentation, test sample, test point location, mounting the test coil, conducting the test, and reporting results are covered.

The Institute of Electrical and Electronics Engineers, Inc.
345 East 47th Street, New York, NY 10017-2394, USA

Copyright © 1991 by the
Institute of Electrical and Electronics Engineers, Inc.
All rights reserved. Published 1991
Printed in the United States of America

ISBN 1-55937-158-7

*No part of this publication may be reproduced in any form, in an electronic retrieval system or otherwise, without the prior written permission of the publisher.*

Copyright The Institute of Electrical and Electronics Engineers, Inc.
Provided by IHS under license with IEEE
No reproduction or networking permitted without license from IHS
Not for Resale

**IEEE Standards** documents are developed within the Technical Committees of the IEEE Societies and the Standards Coordinating Committees of the IEEE Standards Board. Members of the committees serve voluntarily and without compensation. They are not necessarily members of the Institute. The standards developed within IEEE represent a consensus of the broad expertise on the subject within the Institute as well as those activities outside of IEEE that have expressed an interest in participating in the development of the standard.

Use of an IEEE Standard is wholly voluntary. The existence of an IEEE Standard does not imply that there are no other ways to produce, test, measure, purchase, market, or provide other goods and services related to the scope of the IEEE Standard. Furthermore, the viewpoint expressed at the time a standard is approved and issued is subject to change brought about through developments in the state of the art and comments received from users of the standard. Every IEEE Standard is subjected to review at least every five years for revision or reaffirmation. When a document is more than five years old and has not been reaffirmed, it is reasonable to conclude that its contents, although still of some value, do not wholly reflect the present state of the art. Users are cautioned to check to determine that they have the latest edition of any IEEE Standard.

Comments for revision of IEEE Standards are welcome from any interested party, regardless of membership affiliation with IEEE. Suggestions for changes in documents should be in the form of a proposed change of text, together appropriate supporting comments.

Interpretations: Occasionally questions may arise regarding the meaning of portions of standards as they relate to specific applications. When the need for interpretations is brought to the attention of IEEE, the Institute will initiate action to prepare appropriate responses. Since IEEE Standards represent a consensus of all concerned interests, it is important to ensure that any interpretation has also received the concurrence of a balance of interests. For this reason IEEE and the members of its technical committees are not able to provide an instant response to interpretation requests except in those cases where the matter has previously received formal consideration.

Comments on standards and requests for interpretations should be addressed to:

Secretary, IEEE Standards Board
445 Hoes Lane
P.O. Box 1331
Piscataway, NJ 08855-1331
USA

IEEE Standards documents are adopted by the Institute of Electrical and Electronics Engineers without regard to whether their adoption may involve patents on articles, materials, or processes. Such adoption does not assume any liability to any patent owner, nor does it assume any obligation whatever to parties adopting the standards documents.

--`,,`-`-`,,`,,`,`,,`---



Copyright The Institute of Electrical and Electronics Engineers, Inc.
Provided by IHS under license with IEEE
No reproduction or networking permitted without license from IHS
Not for Resale

## Foreword

(This Foreword is not a part of IEEE C57.12.58-1991, IEEE Guide for Conducting a Transient Voltage Analysis of a Dry-Type Transformer Coil.)

This guide covers general recommendations for measuring voltage transients in dry-type distribution and power transformers.

Insulation is recognized as one of the most important constructional elements of a transformer. Its chief function is to confine the current to useful paths, preventing its flow into harmful channels. Any weakness of insulation may result in the failure of the transformer. Dielectric strength is a measure of the effectiveness with which insulation performs. It was once accepted that low-frequency tests alone were adequate to demonstrate the dielectric strength of transformers. As more became known about lightning phenomena, and as impulse-testing apparatus was developed, it became apparent that the distribution of impulse voltage stress through the transformer winding varies with the configuration of the windings.

Impulse voltages are distributed initially on the basis of winding capacitances. If this initial distribution differs from the final low-frequency inductance distribution, the impulse energy will oscillate between the two distributions until the energy is dissipated and the inductance distribution is reached. In severe cases, these internal oscillations can produce voltages to ground that approach twice the applied voltage. Along with the variation in size of transformer windings and the physical configuration of the windings, the impulse voltage distribution when chopping the applied wave was considered by the task force that developed this guide. Since there was insufficient information on how to interpret the short-time oscillations on the insulation system, the inclusion of the chopped wave was deferred until a later date.

The Dry-Type Dielectric Working Group was formed by the Transformers Committee of the IEEE Power Engineering Society to determine standard methods for examining the impulse voltage distribution within dry-type transformer windings; to establish a means for defining the location and magnitude of maximum voltage stress in a dry-type transformer coil; and to support other committee activities, such as the Thermal Evaluation Working Group (C57.12.56).

At the time that this standard was completed, the Dry-Type Dielectric Working Group had the following membership:

**A D. Kline**, *Chair*

| | | |
|---|---|---|
| B. F. Allen | R. H. Hollister | M. I. Mitelman |
| R. Bancroft | J. W. Hupp | J. J. Nay |
| D. A. Barnard | A. M. Iverson | W. F. Paterson |
| A. Bimbiris | A. J. Jonnatti | R. I. Provost |
| M. Cambre | S. P. Kennedy | J. Rodden |
| O. R. Compton | E. Loenig | V. Thenappan |
| J. Frank | M. L. Manning | R. E. Uptegraff, Jr. |
| R. E. Gearhart | R. A. Marek | G. H. Vaillancourt |
| R. Hayes | | H. J. Windisch |

At the time that it balloted and approved this standard for submission to the IEEE Standards Board, the Transformers Committee of the IEEE Power Engineering Society had the following membership:

| | | |
|---|---|---|
| E. J. Adolphson | J. C. Arnold | S. Bennon* |
| L. C. Aicher* | J. Aubin | W. B. Binder |
| D. J. Allan | R. Bancroft | J. V. Bonucchi |
| B. Allen | D. Barnard | J. D. Borst |
| R. Allustiarti | D. L. Basel | C. V. Brown |
| M. S. Altman | P. L. Bellaschi* | O. R. Compton |



Copyright The Institute of Electrical and Electronics Engineers, Inc.
Provided by IHS under license with IEEE
No reproduction or networking permitted without license from IHS
Not for Resale

F. W. Cook
J. L. Corkran
D. W. Crofts
J. N. Davis
D. H. Douglas
R. F. Dudley
J. C. Dutton*
J. K Easley*
J. A. Ebert
F. E. Elliott
D. J. Fallon
H. G. Fischer
S. L. Foster*
M. Frydman
H. E. Gabel*
R. E. Gearhart
D. W. Gerlach
D. A. Gillies
R. S. Girgis
R. L. Grubb
F. J. Gryszkiewicz
G. Hall
J. H. Harlow
F. W. Heinrichs
W. R. Henning
K. R. Highton
P. J. Hoefler
C. Hoesel
R. H. Hollister
C. C. Honey*
E. Howells
Y. P. Iijima
G. W. Iliff*
D. C. Johnson*
D. L. Johnson
A. J. Jonnatti
C. P. Kappeler
R. B. Kaufman*
J. J. Kelly
W. N. Kennedy
J. P. Kinney
A. D. Kline
E. Koening
J. G. Lackey
R. E. Lee
H. F. Light
L. W. Long*
L. A. Lowdermilk
R. I. Lowe
H. B. Margolis*
T. Massouda
J. W. Matthews
J. McGill
C. J. McMillen
W. J. McNutt
S. P. Mehta
C. K. Miller
C. H. Millian
R. E. Minkwitz
M. Mitelman
H. R. Moore
R. J. Musil
W. H. Mutschler
E. T. Norton
R. A. Olsson*
P. E. Orehek
B. K. Patel
W. F. Patterson
H. A. Pearce
D. Perco
L. W. Pierce
J. M. Pollitt
C. P. Raymond
C. A. Robbins
W. P. Sampat
L. J. Savio
W. E. Saxon
D. N. Sharma
V. Shenoy
L. R. Smith
W. W. Stein
L. R. Stensland
F. Stevens
D. Sundin
L. A. Swenson
D. S. Takach
A. L. Tanton
V. Thenappan
R. C. Thomas*
J. A. Thompson
T. P. Traub
D. E. Truax
W. B. Uhl
R. E. Uptegraff, Jr.
G. H. Vaillancourt
R. A. Veitch
L. B. Wagenaar
R. J. Whearty
A. L. Wilks
J. G. Wood
W. E. Wrenn
A. C. Wurdack*

*Member Emeritus

The Accredited Standards Committee on Transformers, Regulators, and Reactors, C57, that reviewed and approved this document, had the following members at the time of approval:

**Leo J. Savio**, *Chair*
**John A. Gauthier**, *Secretary*

| *Organization Represented* | *Name of Representative* |
|---|---|
| Electric Light and Power Group | P. E. Orehek<br>S. M. A. Rizvi<br>F. Stevens<br>J. Sullivan<br>J. C. Thompson<br>M. C. Mingoia *(Alt.)* |
| Institute of Electrical and Electronics Engineers | J. D. Borst<br>J. Davis<br>J. H. Harlow<br>L. Savio<br>H. D. Smith<br>R. A. Veitch |



Copyright The Institute of Electrical and Electronics Engineers, Inc.
Provided by IHS under license with IEEE
No reproduction or networking permitted without license from IHS
Not for Resale

| | |
|---|---|
| National Electrical Manufacturers Association | G. D. Coulter<br>P. Dewever<br>J. D. Douglas<br>A. A. Ghafourian<br>K. R. Linsley<br>R. L. Plaster<br>H. Robin<br>R. E. Uptegraff, Jr.<br>P. J. Hopkinson *(Alt.)*<br>J. Nay *(Alt.)* |
| Tennessee Valley Authority | F. A. Lewis |
| Underwriters Laboratories, Inc. | W. T. O'Grady |
| US Department of Agriculture, REA | J. Bohlk |
| US Department of Energy, Western Area Power Administration | D. R. Torgerson |
| US Department of the Interior, Bureau of Reclamation | F. W. Cook, Sr. |
| US Department of the Navy, Civil Engineering Corps | H. P. Stickley |

When the IEEE Standards Board approved this standard on June 27, 1991, it had the following membership:

**Marco W. Migliaro**, *Chair*
**Donald C. Loughry**, *Vice Chair*
**Andrew G. Salem**, *Secretary*

| | | |
|---|---|---|
| Dennis Bodson | Thomas L. Hannan | John E. May, Jr. |
| Paul L. Borrill | Donald N. Heirman | Lawrence V. McCall |
| Clyde Camp | Kenneth D. Hendrix | Donald T. Michael* |
| James M. Daly | John W. Horch | Stig L. Nilsson |
| Donald C. Fleckenstein | Ben C. Johnson | John L. Rankine |
| Jay Forster* | Ivor N. Knight | Ronald H. Reimer |
| David F. Franklin | Joseph L. Koepfinger* | Gary S. Robinson |
| Ingrid Fromm | Irving Kolodny | Terrance R. Whittemore |
| | Michael A. Lawler | |

*Member Emeritus

Adam Sicker
*IEEE Standards Project Editor*



Copyright The Institute of Electrical and Electronics Engineers, Inc.
Provided by IHS under license with IEEE
No reproduction or networking permitted without license from IHS
Not for Resale

CLAUSE PAGE

1. General ..... 1

1.1 Functional Diagram ..... 1
1.2 Recurrent Surge Generator ..... 1
1.3 Voltage Measurement ..... 2

2. Recurrent Surge Voltage Generator Circuitry ..... 2

2.1 Description of the Circuit ..... 2
2.2 Selection of Element Values ..... 3

3. Instrumentation ..... 6

3.1 General ..... 6
3.2 Frequency Response ..... 6
3.3 Common-Mode Rejection ..... 7
3.4 Grounding Practice ..... 8

4. Test Sample ..... 9

4.1 Sample Description ..... 9
4.2 Description of Transient Phenomena ..... 9
4.3 Test Leads ..... 9

5. Test Point Locations ..... 9

5.1 General ..... 9
5.2 Pancake-Type (Disc-Type) Coils ..... 9
5.3 Layer-Wound Coils ..... 10
5.4 End Turns ..... 11
5.5 Additional Test Points ..... 11

6. Mounting the Test Coil ..... 12

7. Conducting the Test ..... 12

7.1 Test Coil ..... 12
7.2 Surge Generator ..... 12
7.3 Voltage Measurements ..... 12

8. Reporting Results ..... 13

9. Bibliography ..... 13

Annex A (informative) Solution of Decay Rate of Surge Generator ..... 14



Copyright The Institute of Electrical and Electronics Engineers, Inc.
Provided by IHS under license with IEEE
No reproduction or networking permitted without license from IHS Not for Resale

# IEEE Guide for Conducting a Transient Voltage Analysis of a Dry-Type Transformer Coil

## 1. General

### 1.1 Functional Diagram

Since the function of transient analysis is to determine the response of various parts of the coil to an impulse wave, the circuitry and instrumentation must be designed with that goal in mind. From a functional point of view, the relationship between the test specimen, circuitry, and instrumentation may be seen best in the form of a block diagram, as shown in Fig 1.

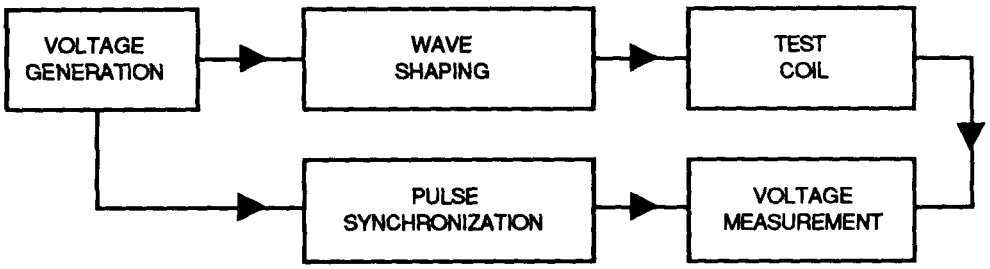


**Figure 1— Block Diagram of Transient Analysis System**

### 1.2 Recurrent Surge Generator

The voltage-generation and wave-shaping functions are performed by a device called a recurrent surge generator. This generator must duplicate, at some voltage compatible with low-voltage instrumentation, the wave shapes seen at the output of an impulse generator. The surge generator, since it is operating at a low voltage, may generate the wave on a recurrent basis. In fact, observation of voltages on an oscilloscope face will be facilitated if the voltage wave is recurrent.

Copyright © 1991 IEEE All Rights Reserved


Copyright The Institute of Electrical and Electronics Engineers, Inc.
Provided by IHS under license with IEEE
No reproduction or networking permitted without license from IHS
Not for Resale

### 1.3 Voltage Measurement

The voltage is applied across the test coil at the line terminals. Voltages between various points within the coil are measured with a high-frequency oscilloscope or other device using a differential amplifier and probes at the input. It is highly desirable that there be synchronization between the generator and the recording instrumentation. This may be accomplished by either a delay in the signal or triggering in advance of the wave. This will ensure the establishment of a zero reference point at the readout. Digital equipment may offer other synchronization methods.

## 2. Recurrent Surge Voltage Generator Circuitry

### 2.1 Description of the Circuit

The circuitry is shown in Fig 2 in its simplest form to provide the function of voltage generation and wave shaping. The voltage is obtained from an ac source and is transformed to a desired level through a variable auto transformer and isolation transformer. Only the isolation transformer is shown in Fig 2. The peak output voltage is limited by the voltage capability of the instrumentation and by ratings of the resistors and capacitors in the wave-shaping portion of the circuitry. The most practical range is between 50 and 150 V. The higher the voltage, the higher the accuracy. The repetition rate of the wave may be the ac power frequency.

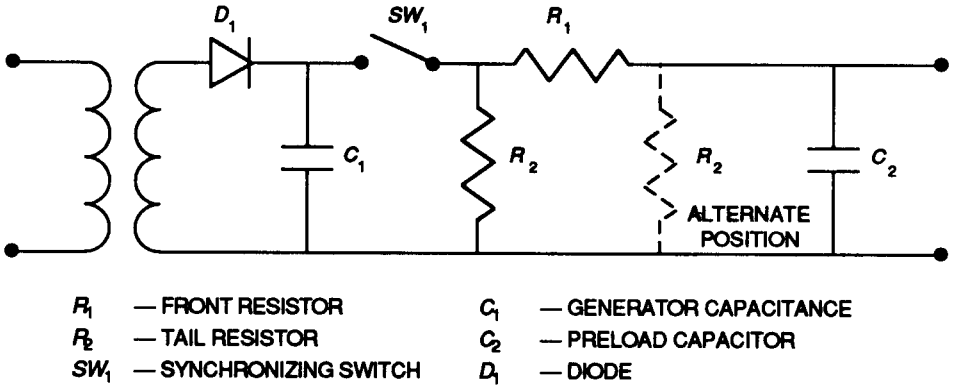


**Figure 2— Schematic of Wave Generation and Shaping Circuit**

The generator capacitor, $C_1$, is charged during the positive half-cycle through the diode, $D_1$. The diode must be rated so that it will hold off twice the transformer output voltage during the negative half-cycle. The diode must also be capable of carrying the maximum charging current.

The actual pulse generation is performed by the capacitor, $C_1$, and the switch, $SW_1$. The switch is closed synchronously with the power frequency. This should occur during the negative half-cycle, when the diode, $D_1$ is blocking. The switch may take different forms, such as a thyratron, ac-driven mercury-wetted switches, and an SCR It is important that there be no bounce or other closing transients in the switch that would distort the shape of the wave front.

Resistors $R_1$ and $R_2$, along with capacitor $C_2$, help shape the wave. In reality, the values of capacitor $C_1$ and the inductance and capacitive values of the test coil also influence the wave shape. For this reason, wave shape adjustments should be made with the coil in the circuit.


Copyright © 1991 IEEE All Rights Reserved

Copyright The Institute of Electrical and Electronics Engineers, Inc.
Provided by IHS under license with IEEE
No reproduction or networking permitted without license from IHS Not for Resale

The length of the tail, which is the time for the wave to decay to 50% of peak level, will be determined by the value of the generator capacitor, $C_1$, the tail resistor, $R_2$, and the low-frequency impedance of the test coil. If there is no core in the coil, then the impedance is simply the air-core inductance. The rise time of the wave is determined by the values of the front resistor, $R_1$, the front capacitor, $C_2$, and the input capacitance of the test coil.

## 2.2 Selection of Element Values

This section will cover the selection of values of generator capacitance, $C_1$, tail resistance, $R_2$, front capacitance, $C_2$, and front resistance, $R_1$. It is these values plus the test-coil parameters that will determine the wave shape.

### 2.2.1 Generator Capacitance

There are two criteria for selecting the minimum generator capacitance:

1) Test specimen capacitance and front capacitance value
2) Test specimen inductance

The effect of the test specimen and front capacitance is to directly lower the output voltage *(e)*. This can be seen by the analysis of the simplified generator circuit in Fig 3.

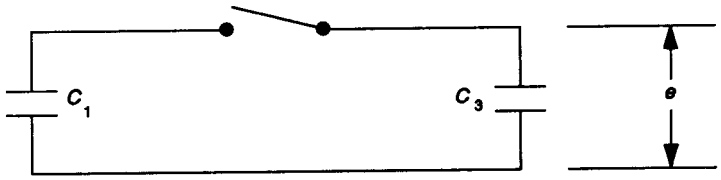


**Figure 3— Division of Voltage Between Capacitors**

Initially, the capacitor $C_1$ is charged to a voltage $E$. The magnitude of the output voltage alter the switch is closed is

$$e = \frac{E \cdot C_1}{C_1 + C_3} \tag{1}$$

Note that $C_3$ is the parallel combination of $C_2$ and the test coil capacitance. In order to maintain a high efficiency in charging the front and distributive capacitors, the value of $C_1$ must be much higher than that of $C_3$. Eq 1 can be rearranged to give a value of generator capacitance that can be determined from the desired efficiency, $e/E$, and total front capacitance, $C_3$.

$$C_1 + C_3\left(\frac{\text{Eff}}{1 - \text{Eff}}\right) \tag{2}$$

As mentioned earlier, the low-frequency equivalent circuit of the test coil is dominated by the air-core inductance, if there is no magnetic core. For the purpose of determining the minimum value of generator capacitance, $C_1$, an LC network, as shown in Fig 4, will be considered, and all elements that affect high-frequency characteristics are neglected. Again, capacitor $C_1$ is initially charged to $E$ volts.

Copyright © 1991 IEEE All Rights Reserved


Copyright The Institute of Electrical and Electronics Engineers, Inc.
Provided by IHS under license with IEEE
No reproduction or networking permitted without license from IHS Not for Resale

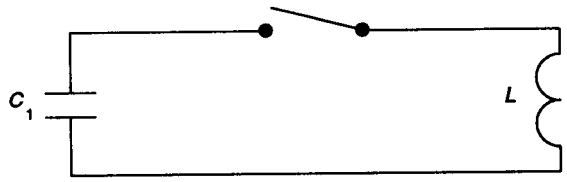


**Figure 4— Low-Frequency Equivalent Circuit of Generator**

After the switch is closed, the output will be sinusoidal in nature.

$$e = E\cos\frac{1}{\sqrt{LC_1}}t \tag{3}$$

At π/3 rad, the output will decay to the 50% point, thus, the generator capacitance can be related to the inductance of the coil.

$$C = \frac{1}{L}\left(\frac{3t}{\pi}\right)^2 \cdot 10^{-12} \tag{4}$$

where:

$t$ = time to 50% point, in μs

For a 50 μs tail, Eq 4 can be simplified to $C = 2.20 \cdot 10^{-9}/L$. Surge generators with three decades of coverage from .0011–1 μF will work for the vast majority of applications. For special situations, terminals may be brought out to an external capacitor. It is important that the capacitors have low inductance because there are high-frequency currents at the front of the wave.

### 2.2.2 Tail Resistor

Capacitors in the range suggested in 2.2.1 are found in discrete values, and the choice of a standard value will result in a longer tail than necessary. A tail resistor will reduce the tail length. Assume that the inductor in Fig 4 is replaced by a resistor, $R_2$, as shown in Fig 5.

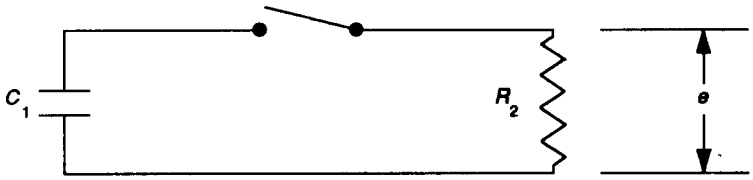


**Figure 5— Generator Capacitor and Tail Resistor**

The voltage output will vary exponentially the equation

$$e = E\ e^{-\left(\frac{t}{R_2C_1}\right)} \tag{5}$$


Copyright © 1991 IEEE All Rights Reserved

Copyright The Institute of Electrical and Electronics Engineers, Inc.
Provided by IHS under license with IEEE
No reproduction or networking permitted without license from IHS
Not for Resale

The exponential will give a more accurate representation of the desired wave. In actual practice, the capacitance is chosen to give a much longer tail than required, and the final adjustment is made by lowering the tail resistance. Suggested resistance ranges are 10 Ω to 10 kΩ in three decades. The resistors should have low inductance in order to minimize resonances at high frequencies.

A more rigorous treatment of the relationship between pulse tail, coil inductance, generator capacitance, and tail resistance can be made. Such a treatment is given in the Appendix. In most cases, however, the relationship can be determined experimentally with the suggested resistors and capacitors as a part of the surge generator.

### 2.2.3 Front Resistor and Front Capacitor

The front or preload capacitance and front resistance, along with the transformer capacitance, determines the rise time of the wave. In the surge generator, these elements function identically with their counterparts in the impulse-test set. The equivalent circuit for the elements that affect the pulse front are shown in Fig 6. During the rise time, the generator capacitance will not significantly change, thus the voltage at the terminals will remain constant. The equation for the output is

$$e = E\left(1 - e^{\frac{-t}{R_1 C_3}}\right) \tag{6}$$

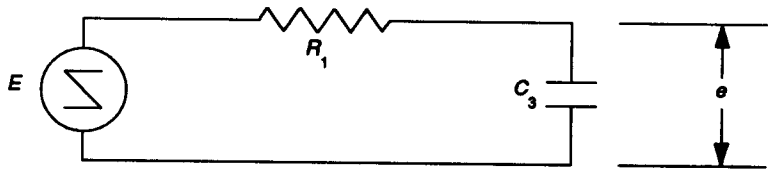


**Figure 6— Simplified High-Frequency Equivalent Circuit**

It will take 1.94 time constants for the output voltage to go from 30% to 90% of final value, or, in terms of the standard wave, $T_2 - T_1 = 1.94\ R_1C_3$.

Example: Assume $C_3 < .004$ μF, and a .72 μs rise from 30% to 90%.

$$R_1 = \frac{.72 \cdot 10^{-6}}{1.94 \cdot .004 \cdot 10^{-6}} = 93\ \Omega$$

A recommended range for front capacitors is = .0001–.01 μF in two decades. The recommended range for front resistors is from 10–250 Ω. It is not recommended that these be in decades, as too many resistors in series will result in high inductance and high-frequency oscillations on the output wave form. (Ceramic resistors will not have this problem.)

The calculated value of front resistance serves as a starting point in adjusting for rise time. Although separate equivalent circuits for the front end adjustments have been assumed for starting values of capacitance and resistance, there is some interaction between the individual adjustments.

In practice, it is necessary to adjust one parameter first, preferably the tail, then the front. It is possible that there may be one or two iterations in these adjustments.

Copyright © 1991 IEEE All Rights Reserved


Copyright The Institute of Electrical and Electronics Engineers, Inc.
Provided by IHS under license with IEEE
No reproduction or networking permitted without license from IHS
Not for Resale

# 3. Instrumentation

## 3.1 General

Transient waveforms generated within the test coil are displayed on an oscilloscope or other transient recording system. Of particular concern are measurements of peak amplitude and time-to-peak. The equipment should have sufficient response for the fastest transients expected, and, at the same time, it should have a capability of measuring differential voltages within the test coil. Both are accomplished by using an oscilloscope with a high-speed medium-gain-differential preamplifier. A recording range consistent with the output voltage of the recurrent surge generator and minimum expected signal is required. The typical range is from 10 Mv to 150 V. Probes must be selected with reduction of input capacitance as a major criteria. The use of low-input capacitance probes will minimize errors due to additional stray capacitance. 12.5 pF paralleled by 10 MΩ is a typical figure for 10X probes.

## 3.2 Frequency Response

There will be high-frequency oscillations within the coil when a wave with a steep front is applied across the terminals of the test coil. Some of these oscillations may exceed the rise time of the input wave. The highest frequency oscillations are generally from turn-to-turn, with the decreasing resonant frequencies seen layer-to-layer or section-to-section. The choice of an oscilloscope or other measuring device is related to the shortest rise time expected and the bandwidth to be measured. The typical relationship between rise time and bandwidth is shown in Eq 7.

$$T_r \cdot BW = 0.35 \tag{7}$$

where:

$BW$ = bandwidth, in MHz
$T_r$ = rise time, in μs

Rise time is defined as the time interval for a transient to change from 10% to 90% of its final value. Bandwidth is the 3 dB sinusoidal response of a single-pole system associated with the rise time defined above. In measuring peak amplitudes of oscillations, the concern is for greater accuracy than a 3 dB error. The bandwidth of a measuring system can be related to the equivalent 3 dB bandwidth by the equation

$$1 - \text{ERROR} = \frac{1}{\sqrt{1 + \left(\frac{BW\ \text{SIGNAL}}{BW\ \text{SYSTEM}}\right)^2}} \tag{8}$$

It is difficult to use Eq 8 directly to calculate the required bandwidth of the measurement system. Rearrangement of this equation will facilitate direct calculation of the desired bandwidth.

$$\frac{BW\ \text{SYSTEM}}{BW\ \text{SIGNAL}} = \frac{1}{\sqrt{\left(\frac{1}{1 - \text{ERROR}}\right)^2 - 1}} \tag{9}$$

Example: Consider a transient with a .3 μs rise time. The equivalent bandwidth for this signal is


Copyright © 1991 IEEE All Rights Reserved

Copyright The Institute of Electrical and Electronics Engineers, Inc.
Provided by IHS under license with IEEE
No reproduction or networking permitted without license from IHS Not for Resale

$$BW\ \text{SYSTEM} = \frac{.35}{.3}\frac{1}{\sqrt{\left(\frac{1}{1-\text{ERROR}}\right)^2 - 1}} \tag{10}$$

Two percent error is a reasonable value to expect in measuring amplitudes because it is consistent with oscilloscope accuracies. The per-unit error is .02. Applying the bandwidth and error figures to Eq 10, an example of the required bandwidth is:

$$BW\ \text{SYSTEM} = 1.1667\frac{1}{\sqrt{\left(\frac{1}{1-.02}\right)^2 - 1}} = 5.7\ \text{MHz} \tag{11}$$

The measuring system bandwidth is the overall bandwidth of the probes, amplifier, and measuring device. In most instances, the limiting component will be the differential amplifier.

## 3.3 Common-Mode Rejection

Since voltages between points on the test coil are measured on a differential basis, and the voltage from each point to ground may be greater than the differential voltage, there exists the potential of a common-mode rejection problem.

A portion of the common-mode voltage will be injected into the system, either in the probes or in the differential amplifier. The degree of rejection of this common-mode voltage is called the common-mode rejection ratio. By definition, it is the ratio of the common-mode voltage to the differential voltage appearing at the output of the oscilloscope or other measuring means when both probe leads are connected to the common-mode voltage. The common-mode rejection ratio (CMRR) may be expressed as a ratio either directly or in decibels.

CMRR is a function of both the balance in the amplifier and probe compensation. The capability of an amplifier is stated usually in the specification sheet. The CMRR generally decreases as frequency increases. To check this parameter, first the equivalent 3 dB frequency for the shortest rise time should be determined, then the CMRR vs. frequency chart in the specification sheet should be consulted. To obtain the best CMRR possible, it is important to have a gain and frequency balance available. Gain balance should be available on the differential amplifier or on the probe housing. Frequency compensation match is achieved by adjustments on the probes. It is important that the probes be checked individually for frequency compensation and gain before the differential adjustments are made. The individual adjustments are made by applying a calibrated (rise time ≤ 0.01 ns) square wave to the probe tips.

Final differential compensation is made using the full output voltage of the recurrent surge generator, with the differential amplifier set at the scale at which the differential voltage is to be observed. This will require a preliminary observation of the differential voltage output. The balancing procedure may have to be repeated each time the gain of the amplifier is changed. After adjusting the probes for minimum common-mode voltage, a detectable voltage called “tare” may exist. If tare voltage exceeds 4% of the expected differential voltage, it should be considered as a part of the measurement. The tare voltage may be positive or negative, and it should be subtracted algebraically from the signal voltage. The actual value of the tare used should be the voltage occurring at the same instant that the peak of the measured voltage occurs.

## 3.4 Grounding Practice

Ground currents will tend to cause common-mode problems, particularly in the situation in which high amplifier gains are required. Good grounding practice will reduce the problem. The probe grounds should not be isolated from each other, nor should the grounds at the probe tips be connected to the coil ground. Rather, the grounds at the tips should be connected to each other with a short strap. This is illustrated in Fig 7. It is best to keep the probes close to each other, even at the tip, in order to minimize a ground loop. Likewise, test leads should be kept close together. If it is necessary

Copyright © 1991 IEEE All Rights Reserved


--`,,`-`-`,,`,,`,`,,`---
Copyright The Institute of Electrical and Electronics Engineers, Inc.
Provided by IHS under license with IEEE
No reproduction or networking permitted without license from IHS Not for Resale

to use a long ground connection, ferrite beads should be placed in the ground interconnection to increase the losses and squelch high-frequency oscillations.

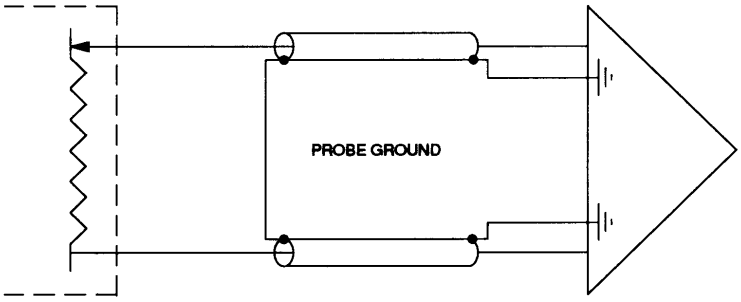


(a) Circuit Under Test — Correct Probe Connection

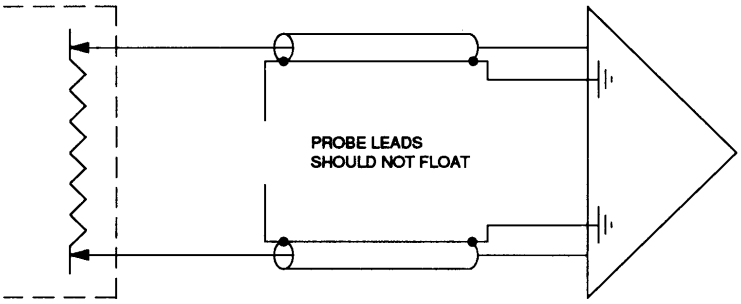


(b) Circuit Under Test — Incorrect Probe Connection

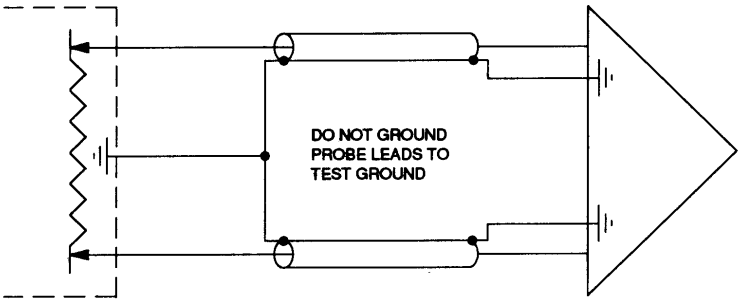


(c) Circuit Under Test — Incorrect Probe Connection

**Figure 7— Probe Grounding Practices**


Copyright © 1991 IEEE All Rights Reserved

Copyright The Institute of Electrical and Electronics Engineers, Inc.
Provided by IHS under license with IEEE
No reproduction or networking permitted without license from IHS
Not for Resale

# 4. Test Sample

## 4.1 Sample Description

The test sample must be a full-size model of the transformer coil being studied. The test sample preferably should be a production coil using the same materials as the coil being studied.

## 4.2 Description of Transient Phenomena

There are three major causes of high stress during transient phenomena:

1) The nonlinear initial impulse distribution that causes high stresses near the line end of the coil
2) Resonance as the initial distribution oscillates to a final linear distribution (this can result in high stresses almost anywhere inside the coil)
3) The possibility that an idle portion of the winding, such as an unused tap, may rise to voltages in excess of the applied impulse

## 4.3 Test Leads

Test leads should be installed in appropriate places in the coil if the test points are not accessible to a probe. Layer-wound coils are an example of coils requiring test leads. The test leads should be placed at the various locations of the coil by soldering, brazing, or mechanically wrapping a wire to the conductor when the coil is wound. The wire should be brought to the closest end of the coil, leaving the minimum extension (not exceeding 1 in) outside the coil for access to the test probes. The test-lead conductor should not be larger than AWG 20. The size and length of the test lead will modify the capacitive distribution inside the coil, thereby modifying the transient voltage distribution. In addition, no two test leads being used for measurement should complete a turn around the core. This practice will result in less induced voltage error.

# 5. Test Point Locations

## 5.1 General

Until enough experience on a given type of winding has been obtained to identify the high-stress areas, it is good practice to measure voltages throughout the entire coil. Therefore, all layer-to-layer and section-to-section voltages should be measured, as well as a representative sampling of turn-to-turn stress from every layer or section. Any parts of the winding that are idle during normal transformer operations, such as taps, should also be checked carefully. To check the stress in the ground insulation, measurements should be taken at the ends of layers or at the beginning and end of each section. Again, the voltage to ground of any idle turns should be checked. Once the general response of a given type of winding is known, a less rigorous program of measurements may be used.

## 5.2 Pancake-Type (Disc-Type) Coils

The maximum stress normally occurs at the outside and inside of adjacent sections of the upset type of coil. Therefore, test points should include both of these locations. This is not necessarily true of all upwound-type pancake coils, where the stress may be largest in the center of the sections. Sufficient test joints should be selected in the initial coil to determine the maximum voltage between sections (see Figs 8 and 9).

Copyright © 1991 IEEE All Rights Reserved


Copyright The Institute of Electrical and Electronics Engineers, Inc.
Provided by IHS under license with IEEE
No reproduction or networking permitted without license from IHS Not for Resale

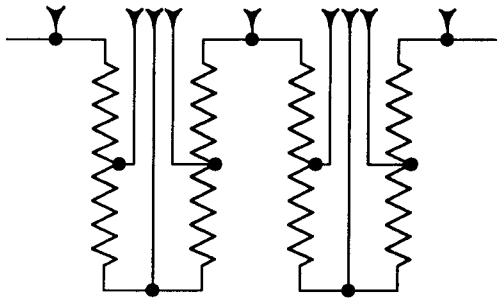


**Figure 8— Upset Sections**

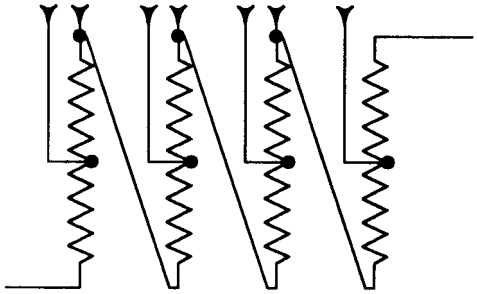


**Figure 9— Upwound Sections**

## 5.3 Layer-Wound Coils

The test points of layer-wound coils should be selected to test the layer insulation between layers at its maximum voltage point. This normally occurs at the lower end of transverse-wound coils. For these coils, it may be necessary to bring the test points out only at the coil ends, with a checkpoint one or two turns from the end to substantiate the results. Coils wound with crossbacks between the layers may have the maximum voltage at any place along the layer. This type of coil will require several test points in adjacent layers to determine the magnitude and position of the maximum voltage (see Figs 10 and 11).


Copyright © 1991 IEEE All Rights Reserved

Copyright The Institute of Electrical and Electronics Engineers, Inc.
Provided by IHS under license with IEEE
No reproduction or networking permitted without license from IHS Not for Resale

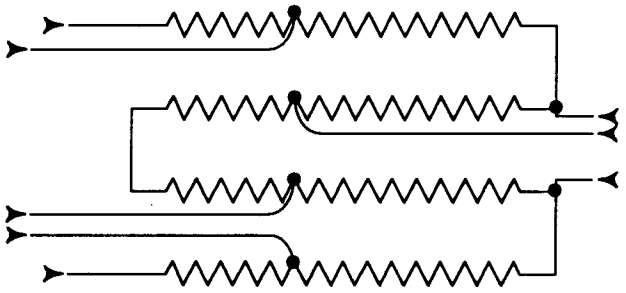

**Figure 10— Traverse Layer Wound (Using Test Leads)**

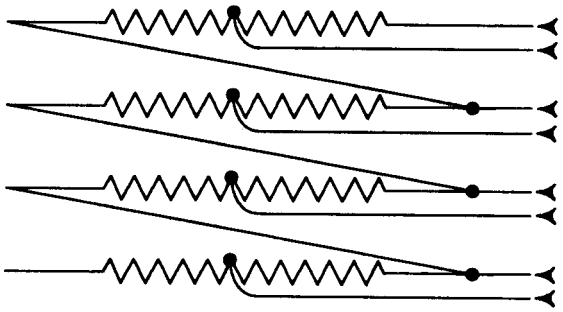

**Figure 11— Crossback Layer Wound (Using Test Leads)**

## 5.4 End Turns

The maximum turn-to-turn voltage normally appears between the end turns. Test leads should be brought out of a sufficient number of end turns to determine the maximum turn-to-turn voltage stress. Turn-to-turn voltage stress should also be determined, and suitable test leads should be placed wherever end turns are interleaved. Test leads are unnecessary if the turns are accessible, as, for example, are the turns of a disc-type coil or the outer turns of a layer-wound coil.

## 5.5 Additional Test Points

Test points at other locations in the coil may be necessary to determine the voltage stress between other parts of the coil, such as between test leads, between the inner layer and ground of a back-turn-type coil, and between the end turn and adjacent turn in the next layer of an extended tap-out winding. Judgement is necessary in the location of additional test points to determine the maximum voltage stress between the various parts of the coil.

Copyright © 1991 IEEE All Rights Reserved


Copyright The Institute of Electrical and Electronics Engineers, Inc.
Provided by IHS under license with IEEE
No reproduction or networking permitted without license from IHS Not for Resale

## 6. Mounting the Test Coil

The test coil should be mounted on the core with the other coils for the test. An alternate to mounting the test coil on the core is to simulate the ground frame of the core and adjacent coils. This may be accomplished by constructing a sheet-metal structure with the same dimensions as the core leg and core end, and a sheet-metal plane that simulates the adjacent coil. One side of the core leg structure must be insulated so as not to produce a short circuit to the high voltage. Otherwise, the structure will load down the generator. The inner coil may be simulated by a sheet-metal plane, provided that the gap to the outer coil is maintained as in the actual coil. A core plane is unnecessary in this case. See Fig 12.

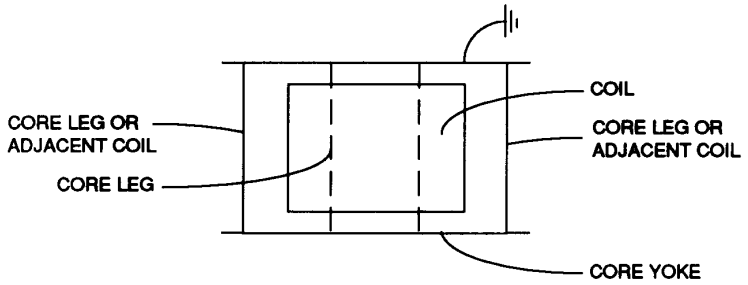


**Figure 12— Test Coil Mounting**

## 7. Conducting the Test

### 7.1 Test Coil

The test coil should be connected to the repetitive surge generator, with the ground structure and one end of the high-voltage coil grounded. The low-voltage coil must be grounded, and it may be shorted or loaded with a resistor if this is the connection used in conducting the impulse test.

### 7.2 Surge Generator

The surge generator should be adjusted for a convenient voltage with a $1.2 \times 50$ μs wave shape, as defined by IEEE C57.12.91 [B1][1]. The surge generator need be energized only during the time that individual readings are being made.

### 7.3 Voltage Measurements

The peak differential voltage between the test points should be measured using the differential input to the oscilloscope. Some oscilloscopes have a beam locator. This feature may aid in determining the peak voltage. The reading should be recorded in a log, with the results calculated as a percent of peak applied wave. A digital peak-reading storage device may be used instead of an oscilloscope if its bandwidth and common-mode variation are equal. Extreme care must be exercised not to introduce stray capacitance and inductance. All leads from the instrumentation to test points should be as short as practical. The test point of a differential probe should be held with an insulated extension so as not to introduce stray capacitance with the hand. Stray capacitance effects caused by the hands can be very pronounced when using pin probes for a continuous coil.

[1]The numbers in brackets, when preceded by the letter "B," correspond to the Bibliography in Section 9.


Copyright © 1991 IEEE All Rights Reserved

Copyright The Institute of Electrical and Electronics Engineers, Inc.
Provided by IHS under license with IEEE
No reproduction or networking permitted without license from IHS Not for Resale

## 8. Reporting Results

The test report should consist of a schematic drawing of the coil with the test points numbered in accordance with the number of turns to that test point and the test log (see Fig 13). The test log should indicate the two test point numbers and the voltage percent between them.

| Lower Turn | Upper Turn | Volts per cm | cm | Percent |
|---|---|---|---|---|
| | | | | |

**Figure 13— Report Form**

Experience will show where the maximum transient voltage occurs for each type of coil construction. It will be satisfactory to reduce the number of test points once a pattern of maximum test points is established.

## 9. Bibliography

[B1] IEEE C57.12.91-1979, IEEE Test Code for Dry-Type Distribution and Power Transformers.

[B2] IEEE Std 4-1978, IEEE Standard Techniques for High Voltage Testing (ANSI).

[B3] NEMA TR1-1954, National Electrical Manufacturers Association Standards for Transformers.

[B4] Bean, R. L., Chackan, Jr., N., Moore, H. R., and Wnetz, E. C. *Transformers for the Electric Power Industry*, New York: McGraw-Hill Book Co., 1959.

[B5] Bellaschi, P. T. "Characteristics of Surge Generators for Transformer Testing," *AIEE Transactions*, Vol. 51, 1932, pp. 936-951.

[B6] Foust, C. M., Kuehni, H. P., and Rohats, N. "Impluse Testing Techniques," *General Electric Review*, Vol. 35, 1932, pp. 358-366.

[B7] Hagenguth, J. H. and Meador, J. R. "Impulse Testing of Power Transformers," *AIEE Transactions*, Vol. 71, pt. 3, 1952, pp. 697-704.

[B8] "Surge Testing," *Electrical Transmission and Distribution Reference Book*, Westinghouse Electric Mfg. Co., 1944.

[B9] Vogel, F. J. and Montsinger, V. M. "Impulse Testing of Commercial Transformers," *AIEE Transactions*, Vol. 52, 1938, pp. 401-410.

Copyright © 1991 IEEE All Rights Reserved


Copyright The Institute of Electrical and Electronics Engineers, Inc.
Provided by IHS under license with IEEE
No reproduction or networking permitted without license from IHS
Not for Resale

## Annex A Solution of Decay Rate of Surge Generator

## (Informative)

(This Appendix is not a part of IEEE C57.1.2.58-1991, IEEE Guide for Conducting a Transient Voltage Analysis of a Dry-Type Transformer Coil, but is included for information only.)

To establish the equivalent circuit, eliminate the components that determine the pulse front, the front resistor, and the front-end distributive capacitance. This leaves the circuit shown in Fig A1.

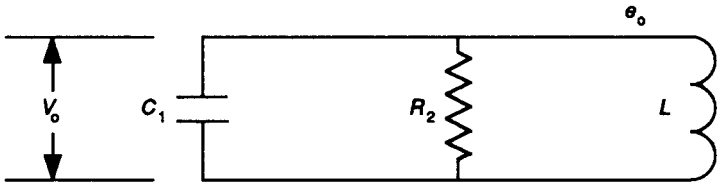


**Figure A1—Equivalent Circuit**

Initially, the capacitor is charged to $V_o$. The differential equation for the output voltage is

$$C_1 \frac{de_o}{dt} \frac{e_o}{R_2} \frac{1}{L} \int e_o dt = 0 \qquad \text{(A-1)}$$

The solution for Eq A1 may be expressed in Laplacian form.

$$E(S) = \frac{S^{V_o}}{S^2 + \frac{S}{R_2 C_1} + \frac{1}{LC_1}} \qquad \text{(A-2)}$$

There are three solutions to this equation. $W_n$ bears a resemblance to the generalized equation

$$E(S) = \frac{S^{V_o}}{S^2 + 2_s \hat{L} W_n + W_n{}^2} \qquad \text{(A-3)}$$

By comparing coefficients of the Laplacian operators, expressions for $W_n$, the undamped natural frequency, and $\hat{L}$, the damping ratio, may be derived.

$$W_n = \frac{1}{\sqrt{LC_1}}$$

$$\hat{L} = \frac{\sqrt{L/C_1}}{2R_2}$$


Copyright © 1991 IEEE All Rights Reserved

Copyright The Institute of Electrical and Electronics Engineers, Inc.
Provided by IHS under license with IEEE
No reproduction or networking permitted without license from IHS Not for Resale

There are three solutions to Eq A3: sinusoidal, critically damped, and exponential. These solutions are determined by the value of the damping ratio, $\hat{L}$.

Case 1: Underdamped, $\hat{L} < 1$

$$e_o(t) = V_o e^{-\hat{L} W_n t}\left[\cos(W_n\sqrt{1-\hat{L}^2}t) - \frac{1}{\sqrt{1-\hat{L}^2}}\sin(W_n\sqrt{1-\hat{L}^2}t)\right]$$

Case 2: Critically damped, $\hat{L} = 1$

$$e_o(t) = V_o e^{-\hat{L} W_n t}(1 - W_{n^t})$$

Case 3: Overdamped, $\hat{L} > 1$

$$e_o(t) = V_o e^{-\hat{L} W_n t}\left[\cosh(W_n\sqrt{1-\hat{L}^2}t) - \frac{1}{\sqrt{1-\hat{L}^2}}\sinh(W_n\sqrt{1-\hat{L}^2}t)\right]$$

Fig A.2 illustrates the solution for Case 2, where $\hat{L} = 1$, and for Case 1, where $\hat{L} = 0$, .2, and .5. $\hat{L} = 0$, of course, represents a completely undamped response.

Copyright © 1991 IEEE All Rights Reserved


Copyright The Institute of Electrical and Electronics Engineers, Inc.
Provided by IHS under license with IEEE
No reproduction or networking permitted without license from IHS
Not for Resale

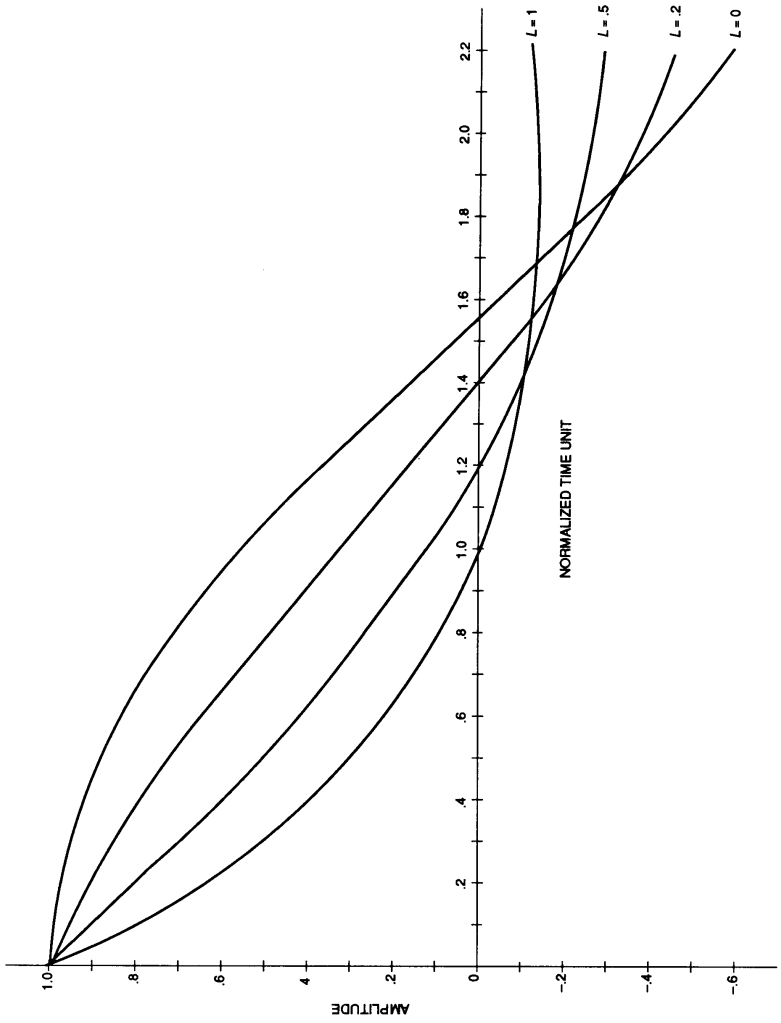


**Figure A.2—Amplitude vs. Normalized Time for the Function** $\frac{S}{S^2 + 2\zeta\omega_n + \omega_n^2}$



Copyright © 1991 IEEE All Rights Reserved

Not for Resale

Copyright The Institute of Electrical and Electronics Engineers, Inc.
Provided by IHS under license with IEEE
No reproduction or networking permitted without license from IHS