# American National Standard for Secondary Network Transformers Subway and Vault Types (Liquid Immersed)—Requirements

Approved 6/30/00

**American National Standards Institute, Inc.**

The Institute of Electrical and Electronics Engineers, Inc.
3 Park Avenue, New York, NY 10016-5997, USA

Copyright © 2003 by the Institute of Electrical and Electronics Engineers, Inc.
All rights reserved. Printed in the United States of America.

*Print:* ISBN 0-7381-3641-7 SH95117
*PDF:* ISBN 0-7381-3642-5 SS95117

*No part of this publication may be reproduced in any form, in an electronic retrieval system or otherwise, without the prior written permission of the publisher.*

Copyright The Institute of Electrical and Electronics Engineers, Inc.
Provided by IHS under license with IEEE
No reproduction or networking permitted without license from IHS

Not for Resale

American National Standard

Approval of an American National Standard requires verification by ANSI that the requirements for due process, consensus, and other criteria for approval have been met by the standards developer.

Consensus is established when, in the judgment of the ANSI Board of Standards Review, substantial agreement has been reached by directly and materially affected interests. Substantial agreement means much more than a simple majority, but not necessarily unanimity. Consensus requires that all views and objections be considered, and that a concerted effort be made toward their resolution.

The use of American National Standards is completely voluntary; their existence does not in any respect preclude anyone, whether he has approved the standards or not, from manufacturing, marketing, purchasing, or using products, processes, or procedures not conforming to the standards.

The American National Standards Institute does not develop standards and will in no circumstances give an interpretation of any American National Standard. Moreover, no person shall have the right or authority to issue an interpretation of an American National Standard in the name of the American National Standards Institute. Requests for interpretations should be addressed to the secretariat or sponsor whose name appears on the title page of this standard.

**DISCLAIMER:** The standards or guidelines presented in a NEMA Standards Publication are considered technically sound at the time they are approved for publication. They are not a substitute for a product seller's or user's own judgment with respect to the particular product referenced in the standard or guideline, and NEMA does not undertake to guaranty the performance of any individual manufacturer's products by virtue of this standard or guide. Thus, NEMA expressly disclaims any responsibility for damages arising from the use, application, or reliance by others on the information contained in these standards or guidelines.

**CAUTION NOTICE**: This American National Standard may be revised or withdrawn at any time. The procedures of the American National Standards Institute require that action be taken periodically to reaffirm, revise, or withdraw this standard. Purchasers of American National Standards may receive current information on all standards by calling or writing the American National Standards Institute.

Copyright The Institute of Electrical and Electronics Engineers, Inc.
Provided by IHS under license with IEEE
No reproduction or networking permitted without license from IHS
Not for Resale

# CONTENTS

Foreword ..... v

1 Scope ..... 1

2 Referenced and related American National Standards ..... 1
2.1 Referenced American National Standards ..... 1
2.2 Related American National Standards ..... 1

3 Transformer performance requirements ..... 2
3.1 Kilovolt-ampere ratings ..... 2
3.2 Voltage ratings and tap ratings ..... 2
3.3 Angular displacement ..... 3
3.4 Basic lightning impulse insulation levels ..... 3
3.5 Percent impedance ..... 3
3.6 Audible sound levels ..... 3

4 Tests ..... 3

5 Primary disconnect and grounding switch ..... 4
5.1 General ..... 4
5.2 Primary switch electrical performance requirements ..... 4
5.3 Primary switch mechanical features ..... 5
5.4 Primary switch accessory equipment ..... 6
5.5 Primary cable entrance ..... 6

6 Construction ..... 7
6.1 General ..... 7
6.2 Corrosion resistance ..... 7
6.3 Tank ..... 7
6.4 Accessory equipment for transformer tanks ..... 8
6.5 Dimensions ..... 9

7 Bushings ..... 9
7.1 Primary bushings ..... 9
7.2 Secondary bushings ..... 9
7.3 Terminal markings ..... 10

8 Neutral termination ..... 11
8.1 Primary neutral ..... 11
8.2 Secondary neutral ..... 11

9 Nameplate ..... 11

10 Connections of transformer for shipment by the manufacturer ..... 11

Copyright The Institute of Electrical and Electronics Engineers, Inc.
Provided by IHS under license with IEEE
No reproduction or networking permitted without license from IHS
Not for Resale

Copyright The Institute of Electrical and Electronics Engineers, Inc.
Provided by IHS under license with IEEE
No reproduction or networking permitted without license from IHS

Not for Resale

## Foreword (This Foreword is not part of American National Standard C57.12.40-2000)

The Accredited Standards Committee on Transformers, Regulators, and Reactors, C57, has for a number of years been developing and correlating standards on transformers and regulators. The data used in this work has been gathered from many sources, including the standards of the Institute of Electrical and Electronics Engineers and the National Electrical Manufacturers Association, reports of committees of the Edison Electric Institute, and others.

The graphics and detailed work required to produce this standard were provided Mike Boulware of ABB Power T&D Company, Inc. of South Boston, Virginia.

Suggestions for improvement of this standard will be welcome. They should be sent to the National Electrical Manufacturers Association, 1300 N. 17th Street, Rosslyn, Virginia 22209.

This standard was processed and approved for submittal to ANSI by Accredited Standards Committee C57 on Transformers, Regulators, and Reactors. Committee approval of the standard does not necessarily imply that all committee members voted for its approval. At the time it approved this standard, the C57 Committee had the following members:

J. D. Borst, Chairman
J. A. Gauthier, Secretary

| *Organization Represented* | *Name of Representative* |
|---|---|
| U.S. Dept. of Energy<br>Western Area Power Administration | Kenneth C. Wolohon |
| Dept. of the Navy, Civil Engineer Corps. | Peyton E. Glenn, Jr. |
| Dept. of the Interior, Bureau of Reclamation | Boyd Leuenberger |
| Dept. of Agriculture, R.E.A. | Mehrdad Eskandary |
| Tennessee Valley Authority | F. Lewis |
| Underwriters Laboratories, Inc. | M. Shacker |
| Electric Light & Power Company (EL&P) | P. Orehek, Chairman<br>Carl G. Neiman<br>T. Diamantis<br>K. S. Hanus<br>Gary Miller (Alt.)<br>Glenn Anderson<br>J. Sullivan |
| Institute of Electrical and Electronics Engineers | W. B. Binder, Chairman<br>J. D. Borst<br>J. W. Matthews<br>B. Patel<br>T. Prevost<br>H. Jin Sim (Alt.) |

Copyright The Institute of Electrical and Electronics Engineers, Inc.
Provided by IHS under license with IEEE
No reproduction or networking permitted without license from IHS
Not for Resale

| | |
|---|---|
| National Electrical Manufacturers Association | D. Rollings, Chairman<br>G. Coulter<br>P. J. Hopkinson<br>R. Plaster<br>H. Robin<br>H. Jin Sim (Alt.) |
| Underwriters Laboratories, Inc. | M. Shacker |

At the time that this standard was approved, the Working Group had the following membership:

R. L. Plaster, Chairperson

| | | | |
|---|---|---|---|
| B. Klaponski | C. Niemann | R. Graham | T. Greely |
| W. McCain | P. Orehek | J. Sullivan | G. Miller |
| P. Risse | W. Wimmer | R. Butani | J. Moffat |
| A. Robinson | D. Mulkey | L. Dix | I. Hussain |
| J. Somma | | | |

--`,,`-`-`,,`,,`,`,,`---

Copyright The Institute of Electrical and Electronics Engineers, Inc.
Provided by IHS under license with IEEE
No reproduction or networking permitted without license from IHS
Not for Resale

## for Secondary Network Transformers Subway and Vault Types (Liquid Immersed)—Requirements

# 1 Scope

**1.1** This standard is intended for use as a basis for establishing the performance, interchangeability, and safety of the equipment covered and to assist in the proper selection of such equipment.

**1.2** This standard covers certain electrical, dimensional, and mechanical characteristics and takes into consideration certain safety features of three-phase, 60Hz, liquid-immersed, secondary network transformers with a three position grounding switch, subway and vault types, rated 2500 KVA and smaller; primary 34 400 volts and below; secondary 216Y/125 volts and 480Y/277 volts.

A subway-type network transformer is one that is suitable for frequent or continuous submerged operation.

A vault-type network transformer is one that is suitable for occasional submerged operation.

# 2 Referenced and related American National Standards

This standard is intended to be used in conjunction with the following American National Standards.

### 2.1 Referenced American National Standards

When an American National Standard referred to in this document is superseded by a revision approved by the American National Standards Institute, Inc., the revision shall not apply. The referenced standard and the specific referenced edition shall be the applicable referenced standard until the new version of the referenced document is incorporated by formal action or appropriate revision of the citing standard. All characteristics, definitions, tests, and voltage designations, except as specifically covered in this standard, shall be in accordance with the American National Standards listed below.

ANSI/ASME B1.1-1989, *Unified Inch Screw Threads (UN and UNR Thread Form)*

ANSI/IEEE C17.12.00-1993, *General Requirements for Liquid-Immersed Distribution, Power and Regulating Transformers*

ANSI/IEEE C57.12.80-1978 (R 1992), *Terminology for Power and Distribution Transformers*

ANSI/IEEE C57.12.90-1999, *Liquid-Immersed Distribution, Power and Regulating Transformers, and Distribution and Power Transformer Shop-Circuit Test Guide*

ANSI/IEEE C57.91-1995, *Guide for Loading Mineral Oil-Immersed Power Transformers Up to and Including 100 MVA with 55°C or 65°C Winding Rise*

IEEE Standard 386, *IEEE Standard for Separable Insulated Connector Systems for Power Distribution Systems Above 600 V.*

ANSI C57.12.32-1994, *Submersible Equipment – Enclosure Integrity*

### 2.2 Related American National Standards

These standards are listed here for information only and are not essential for the completion of the requirements of this standard.

ANSI C57.12.70-1978 (R1993), *Terminal Markings and Connections for Distribution and Power Transformers*

ANSI/ASME B1.20.1-1983 (R1992), *Pipe Threads-General Purpose (Inch)*

--`,,`-`-`,,`,,`,`,,`---
Copyright The Institute of Electrical and Electronics Engineers, Inc.
Provided by IHS under license with IEEE
No reproduction or networking permitted without license from IHS
Copyright © 2003 IEEE. All rights reserved.
Not for Resale

ANSI/IEEE 100-1996, *Dictionary of Electrical and Electronics Terms*

# 3 Transformer performance requirements

## 3.1 Kilovolt-ampere ratings

Kilovolt-ampere ratings shall be as specified in Table 1.

**Table 1 – Kilovolt-ampere ratings**

| 55°C | 65°C |
|---|---|
| 300 | 336 |
| 500 | 560 |
| 750 | 840 |
| 1000 | 1120 |
| 1500 | 1680 |
| 2000 | 2240 |
| 2500 | 2800 |

The base rating as listed in Table 1 shall not exceed a 55°C average winding temperature rise above standard ambient. The 65°C rating is based on not exceeding a 65°C average winding temperature rise or an 80°C hot-spot temperature rise, as specified in ANSI/IEEE C57.12.00. The temperature rise of the insulating liquid shall not exceed 65°C measured near the top of the tank.

The dual-rated transformers, as shown in Table 1, are based on utilizing an insulation system that allow continuous operation at a 65°C rise and 112% of the 55°C base rating. Dual-rated transformers shall also be capable of delivering the 55°C base kilovolt-ampere rating when operated in a 40°C average ambient temperature with a maximum temperature not to exceed 50°C and without exceeding an 80°C hotspot temperature rise.

When required, a kVA base rating with a 65 °C average winding temperature rise can be specified.

## 3.2 Voltage rating and tap ratings

Preferred voltage ratings and taps shall be in accordance with Table 2. All taps shall be at rated kilovolt-amperes.

**Table 2 – Preferred ratings for subway and vault-type secondary network transformers**

| Preferred nominal system voltage | BIL kV | Note 2 Rating | Transformer primary taps | | kVA ratings for secondary ratings of: | |
|---|---|---|---|---|---|---|
| | | | Above | Below | Note 1 216Y/125 | Note 1 480Y/277 |
| 2400/4160Y | 60 | 4160 | None | None | 300–1000 | 500–1000 |
| | | 4160Y/2400 | None | None | 300–1000 | 500–1000 |
| 12 000 | 95 | 12 000 | None | 11 700/11 400/11 100/10 800 | 300-1000 | 500–2500 |
| | | | 12 600/ 12 300 | 11 700/11 400 | - - - | 500–2500 |
| 13 200 or 7620/13 200Y | 95 | 13 200 | None | 12 870/12 540/12 210/11 880 | 300–1000 | - - - |
| | | | 13 860/13 530 | 12 870/12 540 | - - - | 500–2500 |
| | 95 | 13 200Y/7620 | None | 12 870/12 540/12 210/11 880 | 300–1000 | - - - |
| | | | 13 860/13 530 | 12 870/12 540 | - - - | 500–2500 |
| 14 400 | 95 | 14 400 | None | 14 040/13 680/13 320/12 960 | 300–1000 | - - - |
| | | | 15 120/14 760 | 14 040/13 680 | - - - | 500–2500 |
| 23 000 | 150 | 22 900 | 24 100/23 500 | 22 300/21 700 | 500–1000 | 500–2500 |
| 34 500 | 200 | 27 060 | 29 090/28 414 27 737 | 26 383 | 500-1000 | 500-2500 |
| 34 500 | 200 | 34 400 | 36 200/35 300 | 33 500/32 600 | 500–1000 | 500–2500 |

**NOTES**
1. Kilovolt-ampere ratings separated by a dash (-) include all ratings within that range.
2. All windings are delta-connected unless otherwise indicated.

Copyright The Institute of Electrical and Electronics Engineers, Inc.
Provided by IHS under license with IEEE
No reproduction or networking permitted without license from IHS

Copyright © 2003 IEEE. All rights reserved.
Not for Resale

### 3.3 Angular displacement

The angular displacement between primary and secondary terminal voltages of three-phase transformers with wye-wye connections shall be 0 degrees. The angular displacement between primary and secondary terminal voltages of three-phase transformers with delta-wye connections shall be 30 degrees with the primary leading the low voltage.

### 3.4 Basic lightning impulse insulation levels

Basic lightning impulse insulation levels shall be as specified in Table 2, and the dielectric test levels shall be in accordance with distribution transformer levels in ANSI/IEEE C57.12.00.

**NOTE**—Cable terminations supplied by the user should provide suitable coordination with the transformer insulation level.

### 3.5 Percent impedance

The percent impedance on the rated voltage connection shall be as specified in Table 3.

**Table 3 – Impedance**

| kVA rating | Percent impedance |
|---|---|
| 300–1000 | 5.0 |
| 1500–2500 | 7.0 |

#### 3.5.1 Impedance Tolerance

The tolerance shall be as specified in ANSI/IEEE C57.12.00.

#### 3.5.2 Tolerance on impedance on a tap

The percent departure of the actual impedance on any tap from the actual impedance at the rated voltage shall not be greater than the total tap voltage range expressed as a percentage of the rated voltage.

### 3.6 Audible sound levels

Transformers shall be designed so that the average sound level does not exceed the values given in Table 4 measured according to ANSI/IEEE C57.12.90.

**Table 4 – Audible sound levels**

| Kilovolt-ampere rating 200 kV BIL and below | Average sound level (decibels) dB(A) |
|---|---|
| 300 | 55 |
| 500 | 56 |
| 750 | 57 |
| 1000 | 58 |
| 1500 | 60 |
| 2000 | 61 |
| 2500 | 62 |

## 4 Tests

All tests shall be performed in accordance with ANSI/IEEE C57.12.00 and ANSI/IEEE C57.12.90.

--`,,`-`-`,,`,,`,`,,`---
Copyright The Institute of Electrical and Electronics Engineers, Inc.
Provided by IHS under license with IEEE
No reproduction or networking permitted without license from IHS
Copyright © 2003 IEEE. All rights reserved.
Not for Resale

# 5 Primary disconnect and grounding switch

## 5.1 General

The primary disconnect and grounding switch shall be a three-pole, three-position switch for disconnecting the primary feeder from the transformer and for connecting the incoming feeder to the ground position. The switch shall be housed in an enclosure welded to the end of the transformer tank. The switch enclosure shall consist of a switch chamber and a primary termination chamber, refer to Figure 2.

## 5.2 Primary switch electrical performance requirements

### 5.2.1 Continuous rating

The 60-Hz rating of the switch shall be 200 amperes.

### 5.2.2 Short-circuit rating

In the ground position, the switch shall be capable of withstanding a short-circuit current of 15,000 amperes rms symmetrical for 5 seconds without impairing the continuous rating or operation of the switch. In the closed position, it shall carry the full short-circuit duty of the transformer winding.

### 5.2.3 Interrupting rating

The disconnect and grounding switch shall have one of the two following interrupting ratings.

#### 5.2.3.1 No interrupting rating (dead break)

This requires that the transformer be totally de-energized before the switch mechanism can be operated.

#### 5.2.3.2 Magnetizing current interrupting rating (mag-break)

The switch shall be designed to open the primary when only magnetizing current is present. The switch will not operate while a load is present on the secondary. The switch shall have operational protection as specified in paragraph 5.2.6.1 or 5.6.2.2. The magnetizing current interrupting mechanism shall be designed such that, regardless of the speed at which the switch handle is moved from closed to the open position, no damage will occur to the main contacts of the switch.

### 5.2.4 Dielectric requirements in closed position

The switch shall, as a minimum, be designed to meet the same dielectric values of the transformer to which it is connected. The switch shall be connected to the transformer while dielectric tests are being performed on the transformer.

### 5.2.5 Dielectric requirements in open position

The dielectric strength of the switch in the open position shall be such as to permit dc 5-minute cable tests in the field as in Table 5:

**Table 5 – Cable test requirements**

| | |
|---|---|
| 15 kV switches | 45 kV |
| 25 kV switches | 65 kV |
| 34.5kV switches | 85 kV |

Copyright The Institute of Electrical and Electronics Engineers, Inc.
Provided by IHS under license with IEEE
No reproduction or networking permitted without license from IHS

Copyright © 2003 IEEE. All rights reserved.
Not for Resale

### 5.2.6 Electrical interlock

#### 5.2.6.1 Interlock protection when no interrupting rating is required

An electrical interlock shall prevent movement of the switch from any position when the transformer is energized.

#### 5.2.6.2 Interlock protection when magnetizing current interruption is required

An electrical interlock shall be provided to prevent movement of the switch operating mechanism while the network protector is in the closed position. This interlock will permit the switch to operate from the closed to the open position with the primary feeder energized and the network protector in the open position. This interlock shall lock when de-energized.

A second electrical interlock shall be provided to prevent switch movement into the ground position while the transformer is energized.

#### 5.2.6.3 Interlock testing

The electrical interlock coil shall be tested with, and shall withstand, the same 60-Hz, 1-minute dielectric test as the secondary winding.

#### 5.2.6.4 Operating values

The interlock shall pick up and drop-out at the voltages shown in Table 6.

**Table 6 – Interlock coil requirements**

| Coil voltage | Maximum pick-up voltage | Minimum drop-out voltage | Maximum excitation voltage |
|---|---|---|---|
| 125 | 90 | 15 | 140 |
| 277 | 200 | 33 | 310 |

#### 5.2.6.5 Interlock assembly

The interlock assembly shall be such that, with the locking lug or latch mechanism blocked and the coil energized at the voltage indicated, the functional performance of the coil will not be impaired.

### 5.3 Primary switch mechanical features

### 5.3.1 Primary switch and cable terminal chamber covers

A bolted and gasketed cover shall be provided for both switch and terminal chambers. The covers shall be equipped with handles and guide pins. Where cemented gaskets are used, means for breaking the seal shall be provided. Liquid or compound for the terminal chamber is not supplied.

#### 5.3.1.1 Vent and level plug

A 0.25-inch NPT opening with a pipe plug shall be provided in the terminal chamber cover at the 25°C liquid or compound level.

### 5.3.2 Primary switch operating positions and sequence

The three operating positions, as well as the sequence of operation, shall be open, closed, and ground. The switch shall be designed so that when it is moved from open to ground, or from ground to open, a pause is enforced in the closed position to allow time for the electrical interlock to engage if the transformer is energized.

These positions shall be indicated by suitable markings located near the external operating handle and visible from the primary end of the transformer.

--`,,`-`-`,,`,,`,`,,`---
Copyright The Institute of Electrical and Electronics Engineers, Inc.
Provided by IHS under license with IEEE
No reproduction or networking permitted without license from IHS
Copyright © 2003 IEEE. All rights reserved.
Not for Resale

### 5.3.3 Operating handle

The switch-operating handle shall be provided with a latch to prevent accidental movement of the switch. Means shall be provided for padlocking the switch in each position.

## 5.4 Primary switch accessory equipment

The accessory equipment for the primary switch shall be provided and located approximately as shown in Figure 2.

### 5.4.1 Filling provisions

Both the switch chamber and the terminal chamber shall be provided with 1-inch NPT female openings provided with pipe plugs.

### 5.4.2 Air test provision

The air test provision shall be provided for the switch chamber and shall consist of 0.5-inch NPT opening equipped with a 0.5-inch NPT pipe plug and shall be located above the 85°C liquid level.

### 5.4.3 Liquid-level Indicator

A submersible type, welded-on non-gasketed type magnetic liquid-level indicator with a dial (inside bezel) face diameter of approximately 75 mm (3 inches) shall be provided on the switch chamber. The gauge shall have a dark dial face with light markings and a light indicating hand. The dial markings shall show the 25°C level and the minimum and maximum levels. The words “Liquid Level” shall be on the dial or on a suitable nameplate mounted adjacent to the indicator.

### 5.4.4 Drain provisions

#### 5.4.4.1 Primary switch chamber

A globe type drain valve with 1-inch NPT threads shall be provided. The drain valve shall have a pipe plug in the outer end of the valve. A non-conducting thread sealer is required.

#### 5.4.4.2 Terminal chamber

A 1-inch NPT female openings with pipe plugs shall be provided.

## 5.5 Primary cable entrance

The primary cable entrance shall be by means of one of the following methods.

### 5.5.1 Wiping sleeves

Entrance shall be by means of either three single-conductor or one three-conductor straight, tinned, tapered wiping sleeve or sleeves of brass, bronze, or copper that are brazed, welded, or bolted to the terminal chamber. Three single conductor sleeves or one three-conductor sleeve shall be provided as specified. Further details are found in Figure 1.

### 5.5.2 Entrance fittings

Entrance shall be by means of either three single-conductor or one three-conductor bolted-on entrance fittings. Three single-conductor or one three-conductor fitting shall be provided as specified. Further details are found in Figure 1.

### 5.5.3 Bushings and bushing wells

Entrance shall be by means of bushings or bushing wells for connection to the distribution system through adapters, separable insulated connectors, or both.

Copyright The Institute of Electrical and Electronics Engineers, Inc.
Provided by IHS under license with IEEE
No reproduction or networking permitted without license from IHS

Copyright © 2003 IEEE. All rights reserved.
Not for Resale

# 6 Construction

## 6.1 General

The transformer enclosure shall consist of a tank, radiators, a primary switch, a secondary network protector throat, bushing termination, and acessories as specified in this document. The primary switch is welded to one end of the transformer tank. The network protector throat is welded to the other end.

## 6.2 Corrosion resistance

### 6.2.1 Transformer enclosure

The transformer enclosure shall be constructed of materials that provide corrosion resistance equivalent to not less than the thickness of copper-bearing steel shown in Table 7 (minimum copper content: 0.20%).

**Table 7 – Minimum material thickness**

| Transformer enclosure | Subway type mm-(inches) | Vault type mm – (inches) |
|---|---|---|
| Tank wall | 8 –(0.31) | 8 – (0.31) |
| Switch housing | 8 – (0.31) | 8 – (0.31) |
| Auxiliary coolers | 8 – (0.31) | 2.5 – (0.09) |
| Cover | 13 – (0.5) | 13 – (0.5) |
| Tank bottom | 13 – (0.5) | 13 – (0.5) |

### 6.2.2 Hardware

All external hardware, nuts, bolts, washers, etc., shall be austenitic stainless steel, silicon bronze, or the functional equivalent.

### 6.2.3 Other materials

All valves, fittings, pipe plugs or caps, bushings, and cable entrances shall also have corrosion resistance properties, as stated in 6.2.2. Any thread sealant used shall be non-conducting.

### 6.2.4 Finish

The finish shall be a dark color and conform to ANSI C57.12.32, *Submersible Equipment—Enclosure Integrity.*

## 6.3 Tank

### 6.3.1 General

The transformer tank shall be of sealed construction, consisting of a welded main cover equipped with a handhole cover and a subbase. The completely assembled tank shall be of sufficient strength to withstand a pressure of 50 kPa (7 psig) without permanent deformation and 105 kPa (15 psig) without rupture. The completely assembled transformer shall be tested for leaks using a minimum pressure of 50 kPa (7 psig) above the static head of liquid for not less than 6 hours. Alternative methods for leak detection, such as the helium leak detector method, may also be used.

### 6.3.2 Transformer with subbase

The transformer subbase shall consist of bars parallel to the long axis of the transformer. The subbase shall provide a 38 mm (1.5-inch) minimum clearance from the floor to the tank bottom, with corners left clear for jacking.

Copyright The Institute of Electrical and Electronics Engineers, Inc.
Provided by IHS under license with IEEE
No reproduction or networking permitted without license from IHS

Copyright © 2003 IEEE. All rights reserved.
Not for Resale

### 6.3.3 Secondary throat

Secondary throat (Item 10, Figure 2) shall be suitable for connecting to a network protector. A gasket shall be provided for use between the throat and the protector. Bushing spacing, throat dimensions, terminal details, and application shall be as specified in Table 8.

**Table 8 – Secondary throat details**

| Secondary voltage and kVA ratings | | |
|---|---|---|
| **216Y/125** | **480Y/277** | **Figure number** |
| 300, 500 | 500, 750, 1000 | 3 |
| 750, 1000 | 1500, 2000, 2500 | 4 |

### 6.3.4 Handhole cover

A handhole with a welded cover shall be provided for disconnecting the neutral or neutrals for test and for mounting a pressure-relief device when present. A welded cover shall be furnished.

### 6.3.5 Lifting lugs

Four lifting lugs shall be arranged to facilitate lifting the transformer with or without the network protector attached. The lugs shall be provided with a suitable hole for attaching a 400 mm (1.5 inch) clevis.

### 6.3.6 Lifting and jacking provisions

Lifting and jacking provisions shall be designed to provide a safety factor of 5. This safety factor is the ratio of the ultimate stress of the material used to the working stress. The working stress is the maximum combined stress developed in the lifting provisions by the static load of the completely assembled transformer.

### 6.3.7 Secondary throat shipping guard

A sealed sheet steel cover pan, fully flat gasketed, shall be installed over the secondary throat to prevent mechanical and corrosive damage to the secondary bushings, external connectors, and throat flange during shipment and storage outdoors. The throat cover shall be bolted securely to the flange of the secondary throat. The cover shall be completely enclosed to prevent entrance of air-borne chemicals or moisture that may corrode these external parts. The cover shall be painted.

## 6.4 Accessory equipment for transformer tanks

Accessory equipment is that equipment which shall be provided as part of the transformer. The approximate location of such equipment is shown in Figure 2.

### 6.4.1 Tap changer

A tap changer for de-energized operation shall be provided. Each tap changer position and the associated tap voltage shall be clearly identifiable by reference to nameplate information. All positions of the tap changer shall be operative positions. The tap changer shall be of sealed construction such that the integrity of the main tank seal is not compromised at any time. The tap changer shall be designed with an external operating means available under a protective cap on top of the main tank. An indicator shall clearly show the tap position when the cap is removed.

### 6.4.2 Air test provision

The air test provisions shall consist of a 0.5-inch NPT opening equipped with a 0.5-inch NPT pipe plug and shall be located above the 85°C liquid level.

### 6.4.3 Welded-on, non-gasketed-type, magnetic liquid-level indicator

Refer to paragraph 5.4.3 for the requirements for the liquid level indicator.

--`,,`-`-`,,`,,`,`,,`---

Copyright The Institute of Electrical and Electronics Engineers, Inc.
Provided by IHS under license with IEEE
No reproduction or networking permitted without license from IHS

Copyright © 2003 IEEE. All rights reserved.
Not for Resale

### 6.4.4 Dial-type thermometer without alarm contacts

The diameter of the dial (inside bezel) shall be approximately 115 mm (4.5 inches). The thermometer shall be the direct-stem type, mounted in a closed well at a suitable level to indicate the top liquid temperature. The thermometer shall have a dark dial face with light markings, a light-colored indicating hand, and an orange-red maximum indicating hand, with provision for resetting. The dial markings shall cover the range from 0°C to 120°C. The words "Liquid Temperature" shall be on the dial or on a suitable nameplate mounted adjacent to the indicator.

### 6.4.5 Combination drain and bottom filter valve

Refer to paragraph 5.4.4.1 for the drain valve requirements.

### 6.4.6 Filling plug and upper filter press connection

The filling plug and upper filter press connection shall be located in the cover and shall consist of a 1 inch NPT female opening with plug.

### 6.4.7 Ground pads

Tank-grounding provisions shall consist of a copper-faced steel or stainless steel pad with two holes horizontally spaced on 44.5 mm (1.75 inch) centers and drilled and tapped for 0.5-inch 13-UNC thread. The ground pad shall be welded to the tank. The minimum thickness of the copper facing shall be 0.4 mm (0.015 inch). The minimum threaded depth of the holes shall be 13 mm (0.5 inch). Thread protection for the ground pad shall be provided.

### 6.5 Dimensions

Dimensions, including the secondary flexible connectors (without the network protector attached), shall not exceed those shown in Table 9. These dimensions are intended to guide the user in planning vaults capable of accommodating all current designs of the network transformers covered by this standard.

## 7 Bushings

### 7.1 Primary bushings

### 7.1.1 Primary bushings between the main tank and the switch chamber

These bushings shall be sealed to prevent the interchange of liquids between compartments. The insulators of the bushings shall be replaceable from the switch chamber.

### 7.1.2 Primary bushings between the switch chamber and the terminal chamber

These bushings shall be sealed to prevent interchange of liquids or compounds between compartments. They shall be the stud type, and the interior distance from the top of the stud to the top of the terminal chamber shall be as specified in Figure 1.

### 7.1.3 Primary entrance

The primary entrance to the terminal chamber when bushings or bushing wells are required for connection to the distribution system shall be by means of adapters or separable insulated connectors, or both. Reference IEEE Standard 386, *IEEE Standard for Separable Insulated Connector Systems for Power Distribution Systems Above 600 V*.

### 7.2 Secondary bushings

The secondary bushings shall be located inside the secondary throat and shall be brazed or welded to the tank. Bushings shall be located as indicated in Figure 2. The bushings shall be externally replaceable.

Copyright The Institute of Electrical and Electronics Engineers, Inc.
Provided by IHS under license with IEEE
No reproduction or networking permitted without license from IHS

Copyright © 2003 IEEE. All rights reserved.
Not for Resale

### 7.3 Terminal markings

External primary and secondary terminal markings shall be in accordance with Figure 2.

**Table 9**

**Maximum tank dimensions in millimeters (4)**

| For mineral oil-filled units | | | | | | | | | | | | |
|---|---|---|---|---|---|---|---|---|---|---|---|---|
| 15 kV class and below | | | | | 25 kV class | | | | 35 kV class | | | |
| kVA Rating | W | L (1) | $H_c$ (2) | Throat H (3) | W | L (1) | $H_c$ (2) | Throat H(3)) | W | L (1) | $H_c$ (2) | Throat H (3) |
| 300 | 990 | 1980 | 1700 | 1070 | — | — | — | — | — | — | — | — |
| 500 | 1120 | 1980 | 1780 | 1220 | 1170 | 2210 | 1180 | 1400 | 1250 | 2390 | 1960 | 1470 |
| 750 | 1190 | 2130 | 1880 | 1400 | 1220 | 2360 | 1880 | 1550 | 1300 | 2540 | 2030 | 1730 |
| 1000 | 1320 | 2190 | 2140 | 1450 | 1400 | 2470 | 1990 | 1530 | 1470 | 2670 | 2290 | 1860 |
| 1500 | 1430 | 2440 | 2190 | 1575 | 1530 | 2540 | 2190 | 1650 | 1600 | 2770 | 2370 | 1960 |
| 2000 | 1630 | 2670 | 2470 | 1780 | 1780 | 2950 | 2260 | 1780 | 1960 | 2980 | 2670 | 2140 |
| 2500 | 1780 | 2670 | 2570 | 1910 | 1910 | 3280 | 2410 | 1910 | 2140 | 3330 | 2960 | 2290 |
| **For silicone-filled units** | | | | | | | | | | | | |
| 300 | 1070 | 1780 | 1780 | 1070 | — | — | — | — | — | — | — | — |
| 500 | 1220 | 2090 | 1830 | 1220 | 1250 | 2210 | 1180 | 1400 | 1320 | 2390 | 1910 | 1470 |
| 750 | 1270 | 2190 | 2030 | 1400 | 1300 | 2360 | 1910 | 1550 | 1370 | 2540 | 2160 | 1730 |
| 1000 | 1370 | 2240 | 2140 | 1450 | 1400 | 2460 | 2150 | 1520 | 1470 | 2670 | 2290 | 1850 |
| 1500 | 1420 | 2440 | 2160 | 1580 | 1580 | 2570 | 2160 | 1650 | 1650 | 2770 | 2360 | 1960 |
| 2000 | 1630 | 2670 | 2460 | 1780 | 1780 | 2950 | 2490 | 1780 | 1960 | 3050 | 2620 | 2130 |
| 2500 | 1780 | 3050 | 2570 | 1910 | 1960 | 2280 | 2670 | 1910 | 2130 | 3330 | 2870 | 2290 |

**Notes**

(1) "L" includes the flexible secondary bushing adapter (excludes the network protector).

(2) "$H_c$" is the height from floor to cover.

(3) Maximum height from floor to centerline of throat.

(4) Transformers with other insulating liquids may require different dimensions.

**Maximum tank dimensions in Inches (4)**

| For mineral oil-filled units | | | | | | | | | | | | |
|---|---|---|---|---|---|---|---|---|---|---|---|---|
| 15 kV class and below | | | | | 25 kV class | | | | 35 kV class | | | |
| kVA Rating | W | L (1) | $H_c$ (2) | Throat H (3) | W | L | $H_c$ (2) | Throat H (3) | W | L | $H_c$ (2) | Throat H (3) |
| 300 | 39 | 78 | 67 | 42 | — | — | — | — | — | — | — | — |
| 500 | 44 | 78 | 70 | 48 | 46 | 87 | 70 | 55 | 49 | 94 | 77 | 58 |
| 750 | 47 | 84 | 74 | 55 | 48 | 93 | 74 | 61 | 51 | 100 | 80 | 68 |
| 1000 | 52 | 86 | 84 | 57 | 55 | 97 | 78 | 60 | 58 | 105 | 90 | 73 |
| 1500 | 56 | 96 | 86 | 62 | 60 | 100 | 86 | 65 | 63 | 109 | 93 | 77 |
| 2000 | 64 | 105 | 97 | 70 | 70 | 115 | 89 | 70 | 77 | 117 | 105 | 84 |
| 2500 | 70 | 105 | 101 | 75 | 75 | 129 | 95 | 75 | 84 | 131 | 115 | 90 |
| **For silicone-filled units** | | | | | | | | | | | | |
| 300 | 42 | 80 | 70 | 42 | — | — | — | — | — | — | — | — |
| 500 | 48 | 82 | 72 | 48 | 49 | 87 | 70 | 55 | 52 | 94 | 75 | 58 |
| 750 | 50 | 86 | 80 | 55 | 51 | 93 | 75 | 61 | 54 | 100 | 85 | 68 |
| 1000 | 54 | 88 | 84 | 57 | 55 | 97 | 85 | 60 | 58 | 105 | 90 | 73 |
| 1500 | 56 | 96 | 85 | 62 | 62 | 101 | 85 | 65 | 65 | 109 | 93 | 77 |
| 2000 | 64 | 105 | 97 | 70 | 70 | 115 | 98 | 70 | 77 | 120 | 103 | 84 |
| 2500 | 70 | 120 | 101 | 75 | 77 | 129 | 105 | 75 | 84 | 131 | 113 | 90 |

--`,,`-`-`,,`,,`,`,,`---
Copyright The Institute of Electrical and Electronics Engineers, Inc.
Provided by IHS under license with IEEE
No reproduction or networking permitted without license from IHS
Copyright © 2003 IEEE. All rights reserved.
Not for Resale

# 8 Neutral termination

## 8.1 Primary neutral

Transformers having wye-connected primary windings shall have the primary neutral internally connected to the secondary neutral by means of a removable link.

## 8.2 Secondary neutral

A fully rated secondary neutral shall be a blade welded to the tank opposite the internal boss or, when specified by the user, a fully insulated bushing. The neutral termination shall comply with the requirements in Table 10.

If a bushing is used, removable ground straps, sized for the short circuit rating of the transformer, shall be provided and connected between the neutral bushing and a ground pad. The ground pad shall have two 0.5 -13 UNC tapped holes welded to the tank wall and located a minimum of 300 mm (12 inches) from the bushing center.

**Table 10 – Secondary neutral**

| Secondary rating (kVA) | | |
|---|---|---|
| **216Y/125** | **480Y/277** | **Number of holes** |
| 300, 500,<br>750, 1000 | 500, 750, 1000, 1500,<br>2000, 2500 | 4<br>6 |

# 9 Nameplate

The namplate shall be mounted on the primary terminal chamber cover, as shown in Figure 2. The nameplate shall conform to the requirements of the nameplate “C” as described in ANSI/IEEE C57.12.00 and shall be modified to include the following:

a) type (subway or vault)
b) the words “Network Transformer”
c) approximate volume of liquid in switch
d) approximate volume of liquid in transformer
e) interlock coils and connections
f) type of primary switch

# 10 Connections of transformer for shipment by the manufacturer

The transformer shall be shipped connected for the rated high voltage.

Copyright The Institute of Electrical and Electronics Engineers, Inc.
Provided by IHS under license with IEEE
No reproduction or networking permitted without license from IHS

Copyright © 2003 IEEE. All rights reserved.
Not for Resale

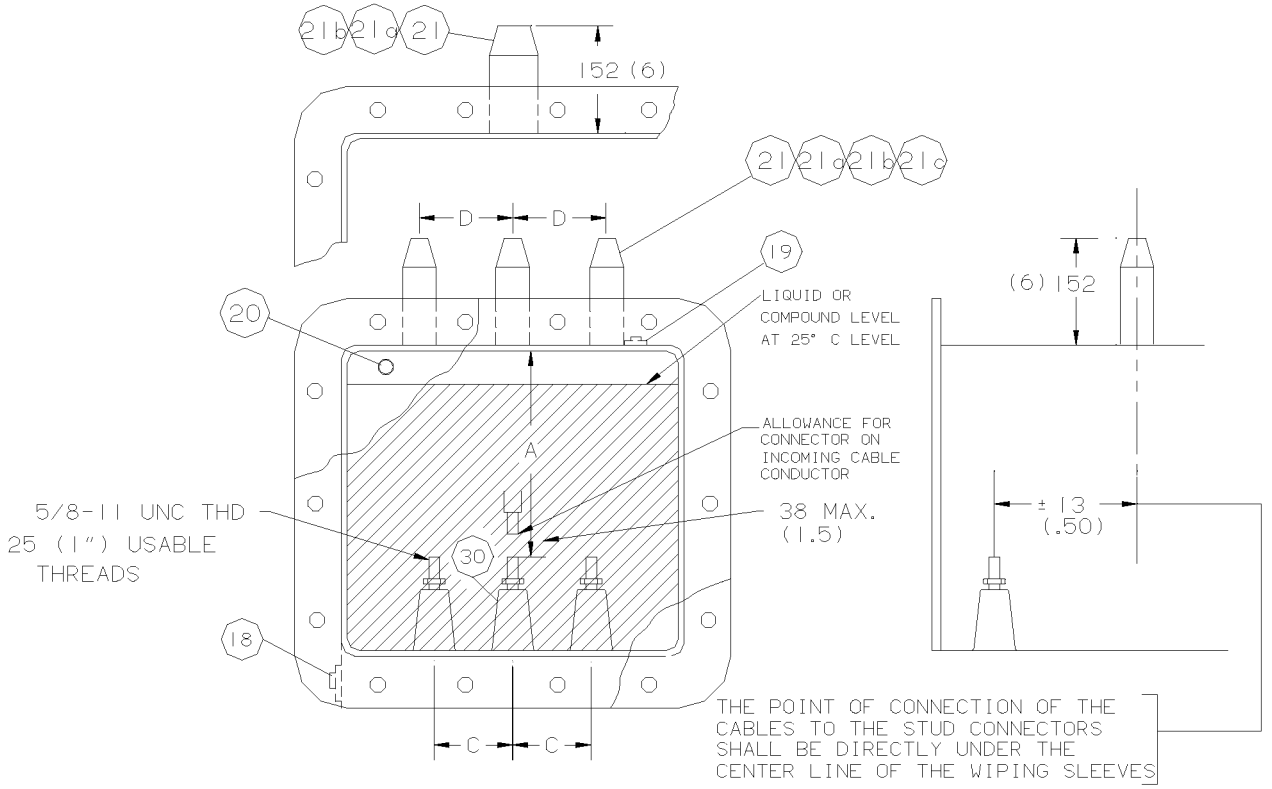


| High voltage | Dimensions | | | | |
|---|---|---|---|---|---|
| BIL (kV) | A (min.) | B (max.) | C (min.) | E (min.) | F |
| 95 and below | 270 mm (10.5 in) | 13 mm (0.5 in) | 115 mm (4.5 in) | 152 mm (4.5 in) | ± 13 mm (0.50 in) |
| 150 | 370 mm (14.5 in) | 25 mm (1.0 in) | 155 mm (6.0 in) | 152 mm (4.5 in) | ± 13 mm (0.50 in.) |
| 200 | 470 mm (18.5 in) | 25 mm (1.0 in) | 165 mm (6.5 in) | 152 mm (4.5 in) | ± 13 mm (0.50 in.) |

| Item number | Section reference | Description |
|---|---|---|
| 18 | 5.4.4.2 | Drain plug |
| 19 | 5.4.1 | Filling plug |
| 20 | 5.3.1.1 | Vent and level plug |
| 21 | 5.5 | Primary cable entrance |
| 21a | 5.5.1 | Three single-conductor wiping sleeves (brazed or welded on) |
| 21b | 5.5.2 | Three single-conductor entrance fittings (bolted on) |
| 21c | 5.5.3 | Separable insulated connectors (plug-in bushings or wells) |
| 22a | 5.5.1 | One three-conductor wiping sleeve (brazed or welded on) |
| 22b | 5.5.2 | One three-conductor entrance fitting (bolted on) |
| 30 | 7.1 | Primary bushings |

NOTES
1 Dimension “C” = “D” when wiping sleeves are used and may vary by ±13 mm (0.50 inches) when wiping sleeves are not used.
2 Allowance for connectors on incoming cable = 38 mm (1.50).

(a)
Chamber

**Figure 1 – Primary terminal chamber details**

Copyright The Institute of Electrical and Electronics Engineers, Inc.
Provided by IHS under license with IEEE
No reproduction or networking permitted without license from IHS

Copyright © 2003 IEEE. All rights reserved.
Not for Resale

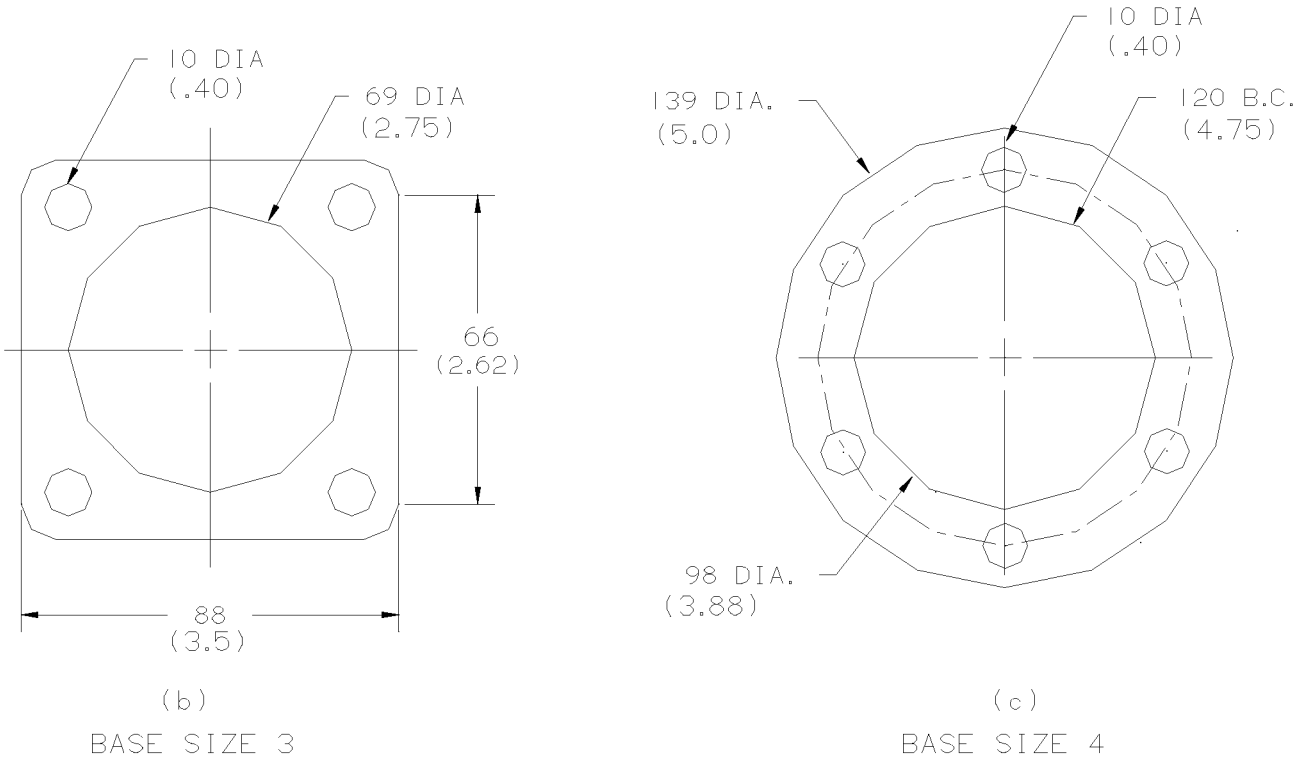


TYPICAL DIMENSIONS

**Wiping sleeve dimensions (brazed or welded on)**

| | Inside diameter (Min.) | Taper to (Max.) | Length of taper (Min.) |
|---|---|---|---|
| Three single-conductor wiping sleeves (item 21a) | 45 mm (1.75 in) | 29 mm (1.13 in) | 38 mm (1.5 in) |
| One three-conductor wiping sleeve (item 22a) | 89 mm (3.5 in) | 38 mm (1.5 in) | 57 mm (2.25 in) |

**Entrance fitting (bolted on)**

| | |
|---|---|
| Three single-conductor entrance fittings (item 21b) | maximum base size 3 (fig. 1b) |
| One three-conductor entrance fitting (item 22b) | maximum base size 4 (fig. 1c) |

**Figure 1 – continued**

--`,,`-`-`,,`,,`,`,,`---

Copyright The Institute of Electrical and Electronics Engineers, Inc.
Provided by IHS under license with IEEE
No reproduction or networking permitted without license from IHS

Copyright © 2003 IEEE. All rights reserved.
Not for Resale

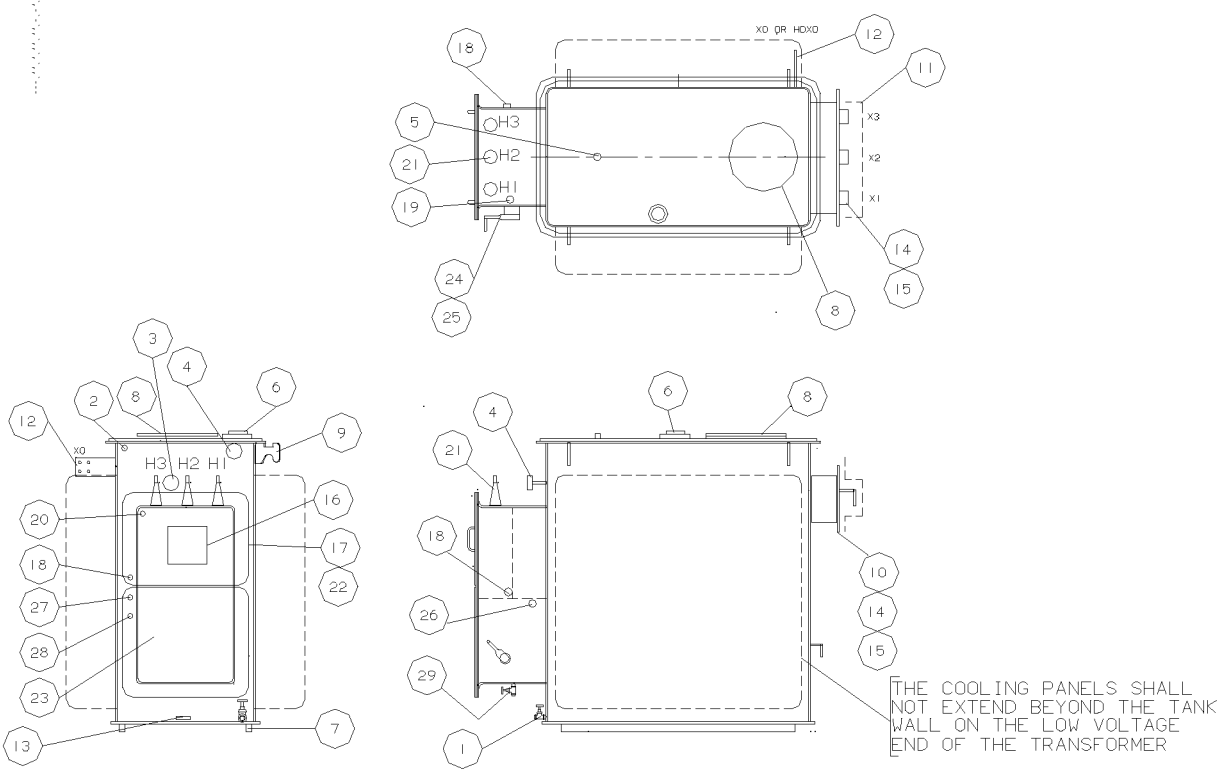


| Compartment | Item number | Section reference | Description |
|---|---|---|---|
| Transformer tank | 1 | 6.4.5 | Combination drain and bottom filler valve |
| | 2 | 6.4.2 | Provision for air test |
| | 3 | 6.4.3 | Welded-on non-gasketed type magnetic liquid-level indicator |
| | 4 | 6.4.4 | Dial-type thermometer without alarm contacts |
| | 5 | 6.4.6 | Filling plug and upper filter press connection |
| | 6 | 6.4.1 | Tap changer |
| | 7 | 6.3.2 | Transformer subbase |
| | 8 | 6.3.4 | Handhole |
| | 9 | 6.3.5 | Lifting lugs |
| | 10 | 6.3.3 | Throat |
| | 11 | 6.3.7 | Shipping guard |
| | 12 | 8.2 | Secondary neutral grounded to tank |
| | 13 | 6.4.7 | External grounding provision |
| | 14 | Figure 3 | Secondary throat for mounting network protector |
| | 15 | Figure 4 | Secondary throat for mounting network protector |
| | 16 | 9 | Nameplate location |
| | 17 | 5.4.4.2 | Primary terminal chamber |
| Primary | 18 | 5.4.4.2 | Drain plug |
| Terminal chamber | 19 | 5.4.1 | Filling plug |
| | 20 | 5.3.1.1 | Vent and level plug |
| | 21 | 5.5 | Primary cable entrance |
| | 22 | Figure 1 | Primary terminal chamber details |
| | 23 | 5.4.4.1 | Primary switch chamber |
| | 24 | 5.2 | Electrical performance requirements |
| Primary | 25 | 5.3.3 | Operating handle |
| Switch chamber | 26 | 5.4.1 | Filling plug |
| | 27 | 5.4.2 | Provision for air test |
| | 28 | 5.4.3 | Welded-on type magnetic liquid-level indicator |
| | 29 | 5.4.4.1 | Drain valve |

**Figure 2 – Location of accessories (three-position disconnecting and grounding switch)**

Copyright The Institute of Electrical and Electronics Engineers, Inc.
Provided by IHS under license with IEEE
No reproduction or networking permitted without license from IHS

Copyright © 2003 IEEE. All rights reserved.
Not for Resale

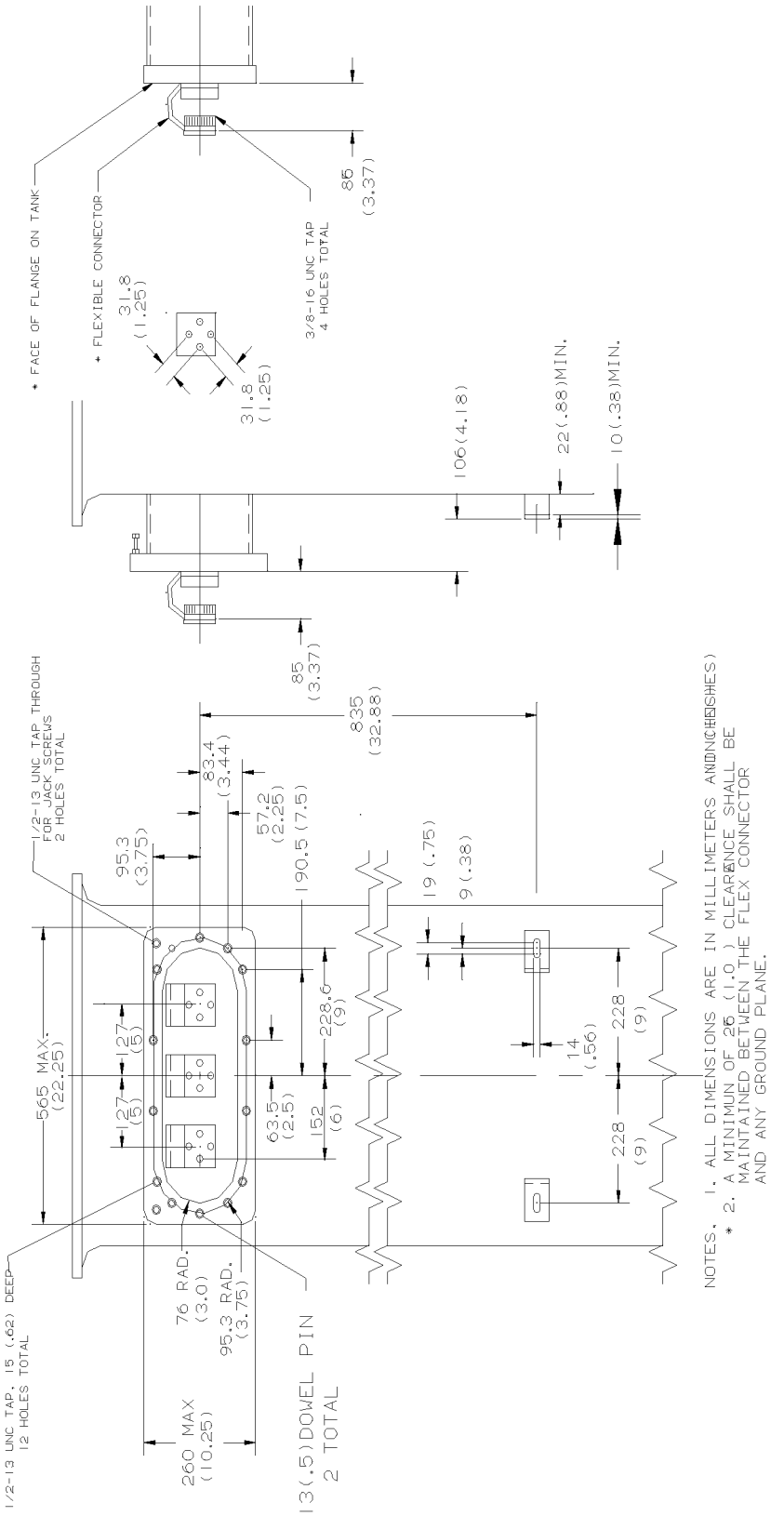


**Figure 3 – Transformer throat for mounting network protector**
Low voltage 216Y/125 volts, 300 – 500 KVA
Low voltage 480Y/277 volts, 500 – 1000 KVA

Copyright The Institute of Electrical and Electronics Engineers, Inc.
Provided by IHS under license with IEEE
No reproduction or networking permitted without license from IHS

Copyright © 2003 IEEE. All rights reserved.
Not for Resale

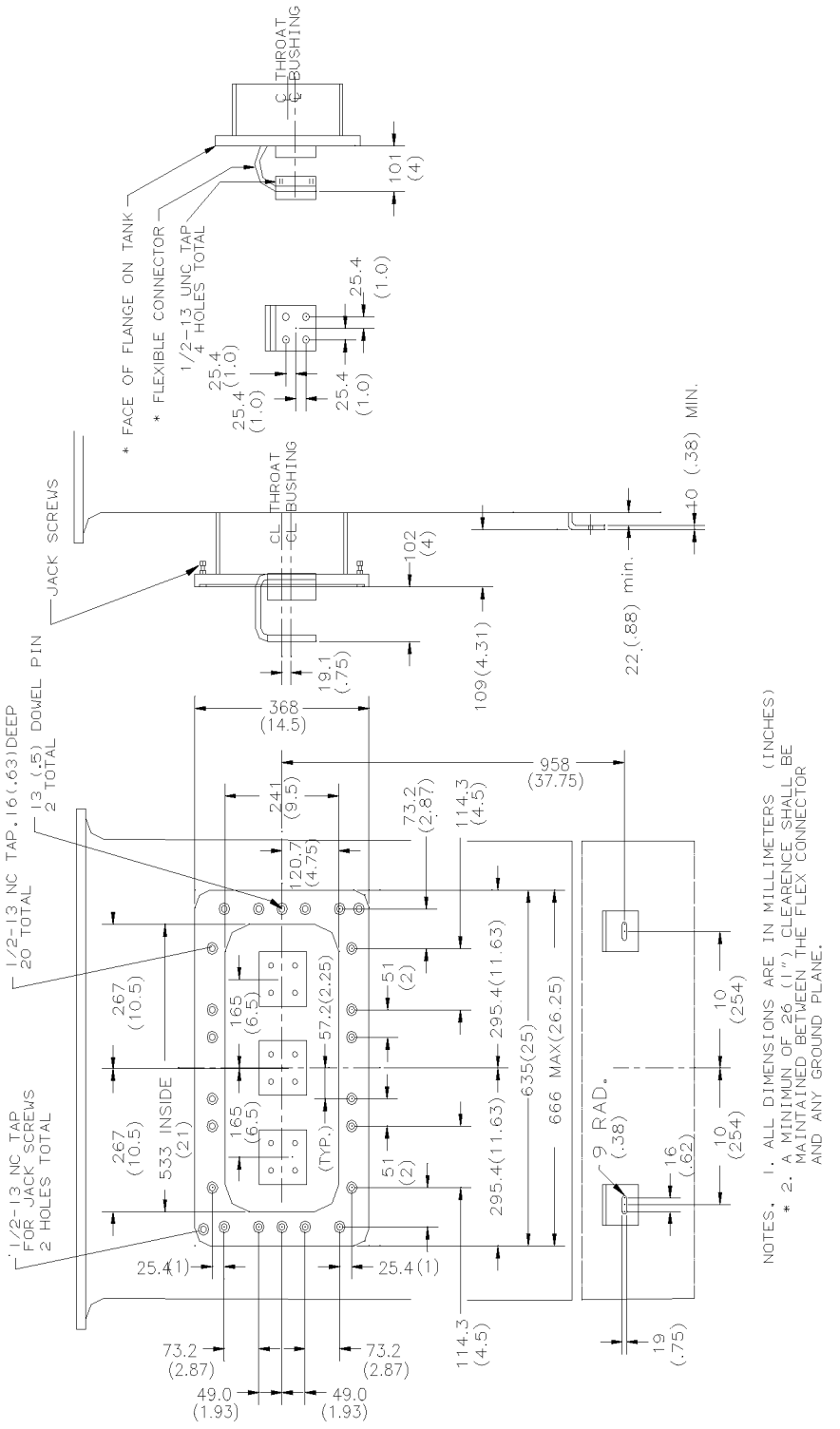


**Figure 4 – Transformer throat mounting for net work protector**
Low voltage 216Y/125 volts, 750 – 1000 KVA
Low voltage 480Y/277 volts, 1500 – 2500 KVA

Copyright The Institute of Electrical and Electronics Engineers, Inc.
Provided by IHS under license with IEEE
No reproduction or networking permitted without license from IHS

Copyright © 2003 IEEE. All rights reserved.
Not for Resale