IEEE Std C57.12.31™-2002

IEEE Standards

C57.12.31™

IEEE Standard for Pole Mounted Equipment—Enclosure Integrity

IEEE Power Engineering Society

Sponsored by the
Transformers Committee

IEEE

Published by
The Institute of Electrical and Electronics Engineers, Inc.
3 Park Avenue, New York, NY 10016-5997, USA

7 March 2003

Print: SH95028
PDF: SS95028

Copyright The Institute of Electrical and Electronics Engineers, Inc.
Provided by IHS under license with IEEE
No reproduction or networking permitted without license from IHS

Not for Resale

Recognized as an
American National Standard (ANSI)

IEEE Std C57.12.31™-2002

IEEE Standard for Pole Mounted Equipment—Enclosure Integrity

Sponsor

Transformers Committee
of the
IEEE Power Engineering Society

Approved 12 September 2002

IEEE-SA Standards Board

Abstract: *Conformance tests and requirements for the coating integrity of carbon steel pole mounted enclosures containing apparatus energized in excess of 600 volts, typically located out of reach of the general public, including, but not limited to, the following types of equipment enclosures: pole-mounted distribution transformers, pole-mounted switches, pole-mounted regulators, pole-mounted metering equipment, pole-mounted reclosers, and pole-mounted switchgear are covered.*
Keywords: *coating integrity, enclosure integrity, pole-mounted equipment, switches, transformers*

The Institute of Electrical and Electronics Engineers, Inc.
3 Park Avenue, New York, NY 10016-5997, USA

Copyright © 2003 by the Institute of Electrical and Electronics Engineers, Inc.
All rights reserved. Published 7 March 2003. Printed in the United States of America.

National Electrical Safety Code and NESC are registered trademarks and service marks of the Institute of Electrical and Electronics Engineers, Inc.

Print: ISBN 0-7381-3377-9 SH95028
PDF: ISBN 0-7381-3378-7 SS95028

No part of this publication may be reproduced in any form, in an electronic retrieval system or otherwise, without the prior written permission of the publisher.

Copyright The Institute of Electrical and Electronics Engineers, Inc.
Provided by IHS under license with IEEE
No reproduction or networking permitted without license from IHS
Not for Resale

IEEE Standards documents are developed within the IEEE Societies and the Standards Coordinating Committees of the IEEE Standards Association (IEEE-SA) Standards Board. The IEEE develops its standards through a consensus development process, approved by the American National Standards Institute, which brings together volunteers representing varied viewpoints and interests to achieve the final product. Volunteers are not necessarily members of the Institute and serve without compensation. While the IEEE administers the process and establishes rules to promote fairness in the consensus development process, the IEEE does not independently evaluate, test, or verify the accuracy of any of the information contained in its standards.

Use of an IEEE Standard is wholly voluntary. The IEEE disclaims liability for any personal injury, property or other damage, of any nature whatsoever, whether special, indirect, consequential, or compensatory, directly or indirectly resulting from the publication, use of, or reliance upon this, or any other IEEE Standard document.

The IEEE does not warrant or represent the accuracy or content of the material contained herein, and expressly disclaims any express or implied warranty, including any implied warranty of merchantability or fitness for a specific purpose, or that the use of the material contained herein is free from patent infringement. IEEE Standards documents are supplied "**AS IS**."

The existence of an IEEE Standard does not imply that there are no other ways to produce, test, measure, purchase, market, or provide other goods and services related to the scope of the IEEE Standard. Furthermore, the viewpoint expressed at the time a standard is approved and issued is subject to change brought about through developments in the state of the art and comments received from users of the standard. Every IEEE Standard is subjected to review at least every five years for revision or reaffirmation. When a document is more than five years old and has not been reaffirmed, it is reasonable to conclude that its contents, although still of some value, do not wholly reflect the present state of the art. Users are cautioned to check to determine that they have the latest edition of any IEEE Standard.

In publishing and making this document available, the IEEE is not suggesting or rendering professional or other services for, or on behalf of, any person or entity. Nor is the IEEE undertaking to perform any duty owed by any other person or entity to another. Any person utilizing this, and any other IEEE Standards document, should rely upon the advice of a competent professional in determining the exercise of reasonable care in any given circumstances.

Interpretations: Occasionally questions may arise regarding the meaning of portions of standards as they relate to specific applications. When the need for interpretations is brought to the attention of IEEE, the Institute will initiate action to prepare appropriate responses. Since IEEE Standards represent a consensus of concerned interests, it is important to ensure that any interpretation has also received the concurrence of a balance of interests. For this reason, IEEE and the members of its societies and Standards Coordinating Committees are not able to provide an instant response to interpretation requests except in those cases where the matter has previously received formal consideration.

Comments for revision of IEEE Standards are welcome from any interested party, regardless of membership affiliation with IEEE. Suggestions for changes in documents should be in the form of a proposed change of text, together with appropriate supporting comments. Comments on standards and requests for interpretations should be addressed to:

Secretary, IEEE-SA Standards Board
445 Hoes Lane
P.O. Box 1331
Piscataway, NJ 08855-1331
USA

Note: Attention is called to the possibility that implementation of this standard may require use of subject matter covered by patent rights. By publication of this standard, no position is taken with respect to the existence or validity of any patent rights in connection therewith. The IEEE shall not be responsible for identifying patents for which a license may be required by an IEEE standard or for conducting inquiries into the legal validity or scope of those patents that are brought to its attention.

Authorization to photocopy portions of any individual standard for internal or personal use is granted by the Institute of Electrical and Electronics Engineers, Inc., provided that the appropriate fee is paid to Copyright Clearance Center. To arrange for payment of licensing fee, please contact Copyright Clearance Center, Customer Service, 222 Rosewood Drive, Danvers, MA 01923 USA; +1 978 750 8400. Permission to photocopy portions of any individual standard for educational classroom use can also be obtained through the Copyright Clearance Center.

--`,,`-`-`,,`,,`,`,,`---

Copyright The Institute of Electrical and Electronics Engineers, Inc.
Provided by IHS under license with IEEE
No reproduction or networking permitted without license from IHS

Not for Resale

Introduction

(This introduction is not part of IEEE Std C57.12.31-2002, IEEE Standard for Pole-Mounted Equipment—Enclosure Integrity.)

The Accredited Standards Committee on Transformers, Regulators, and Reactors, C57, has for a number of years been developing and correlating standards on these products. The data used in this work have been gathered from many sources, including the standards of the Institute of Electrical and Electronics Engineers and the National Electrical Manufacturers Association, reports of committees of the Edison Electric Institute, and others.

This IEEE standard is a voluntary consensus standard. Its use becomes mandatory only when required by a duly constituted legal authority or when specified in a contractual relationship. To meet specialized needs and to allow innovation, specific changes are permissible when mutually determined by the user and the producer, provided such changes do not violate existing laws and are considered technically adequate for the function intended.

This standard was originally prepared by the Joint C57/C37 Working Group on Enclosures with J. Martin and then R. C. Olen as chairman. This group is now the Enclosure Integrity Working Group of the IEEE Transformers Committee.

At the time this standard was completed, the Enclosure Integrity Working Group had the following membership:

R. C. Olen, *Co-Chair*
D. H. Mulkey, *Co-Chair*

Joseph Carulli	Ali Ghafourian	Ronald J. Stahara
Jack Delk	George Henry	Alan Traut
Thomas Diamantis	Joseph Martin	Alan Wilks
Ken Elliott	Carl Niemann	Al Worland
Phillip Fahey	H. Jin Sim	Dan Ziolkowski
	Edward Smith	

The following members of the balloting committee voted on this standard. Balloters may have voted for approval, disapproval, or abstention.

Samuel Aguirre	Edward Horgan	John Rossetti
David Aho	James D. Huddleston, III	James Ruggieri
Glenn Andersen	Gael Kennedy	Stephen Shull
John Borst	Vladimir Khalin	James Smith
Tommy Cooper	Thomas Lundquist	Brian Sparling
Jerry Corkran	William Maguire	Ronald J. Stahara
Michael Culhane	Fortin Marcel	David Stone
Randall Dotson	John Matthews	Ronald Stoner
Jorge Fernandez	Gary Michel	John Sullivan
Dudley Galloway	Dan H. Mulkey	John Teixeira
Eduardo Garcia	Ray Nicholas	Giuseppe Termine
David Gilmer	Robert C. Olen	Alan Traut
Randall Groves	Gerald Paiva	Subhash Tuli
Ken Hanus	Dhiru Patel	Alan Wilks
Michael Hardin	Wesley Patterson	James Wilson
George Henry	Thomas Pekarek	Bill Wimmer
Richard Hollingsworth	Paul Pillitteri	Luis E. Zambrano, Sr.

Copyright © 2003 IEEE. All rights reserved.

Copyright The Institute of Electrical and Electronics Engineers, Inc.
Provided by IHS under license with IEEE
No reproduction or networking permitted without license from IHS
Not for Resale

When the IEEE-SA Standards Board approved this standard on 12 September 2002, it had the following membership:

James T. Carlo, *Chair*
James H. Gurney, *Vice Chair*
Judith Gorman, *Secretary*

Sid Bennett
H. Stephen Berger
Clyde R. Camp
Richard DeBlasio
Harold E. Epstein
Julian Forster*
Howard M. Frazier
Toshio Fukuda
Arnold M. Greenspan
Raymond Hapeman
Donald M. Heirman
Richard H. Hulett
Lowell G. Johnson
Joseph L. Koepfinger*
Peter H. Lips
Nader Mehravari
Daleep C. Mohla
William J. Moylan
Malcolm V. Thaden
Geoffrey O. Thompson
Howard L. Wolfman
Don Wright

*Member Emeritus

Also included are the following nonvoting IEEE-SA Standards Board liaisons:

Alan Cookson, *NIST Representative*
Satish K. Aggarwal, *NRC Representative*

Noelle D. Humenick
IEEE Standards Project Editor

Copyright © 2003 IEEE. All rights reserved.

Copyright The Institute of Electrical and Electronics Engineers, Inc.
Provided by IHS under license with IEEE
No reproduction or networking permitted without license from IHS
Not for Resale

Contents

1. Overview 1

1.1 Scope 1
1.2 Purpose 1

2. References 1

3. Definitions 2

4. Enclosure design and coating system requirements 3

4.1 Enclosure design requirements—objective 3
4.2 Substrate requirements 3
4.3 Coating system requirements 3
4.4 Coating system test specimens 4
4.5 Coating system performance requirements 4

5. General 6

5.1 Shipment 6
5.2 Coating repair procedure 6

Annex A (normative) QUV and SCAB Procedure 7

Annex B (informative) Bibliography 11

Copyright © 2003 IEEE. All rights reserved.

Copyright The Institute of Electrical and Electronics Engineers, Inc.
Provided by IHS under license with IEEE
No reproduction or networking permitted without license from IHS
Not for Resale

--`,,`-`-`,,`,,`,`,,`---

Copyright The Institute of Electrical and Electronics Engineers, Inc.
Provided by IHS under license with IEEE
No reproduction or networking permitted without license from IHS

Not for Resale

IEEE Standard for Pole Mounted Equipment—Enclosure Integrity

1. Overview

1.1 Scope

This standard covers conformance tests and requirements for the coating integrity of carbon steel pole mounted enclosures containing apparatus energized in excess of 600 V, typically located out of reach of the general public, including, but not limited to, the following types of equipment enclosures:

a) Pole-mounted distribution transformers
b) Pole-mounted switches
c) Pole-mounted regulators
d) Pole-mounted metering equipment
e) Pole-mounted reclosers
f) Pole-mounted switchgear

1.2 Purpose

The purpose of this standard is to describe the requirements of a coating system for pole-mounted equipment enclosures to ensure long field life with minimum maintenance.

2. References

This standard shall be used in conjunction with the following standards. When the following standards are superseded by an approved revision, the revision shall apply.

ASTM B117-97, Standard Practice for Operating Salt Spray (Fog) Apparatus.[1]

ASTM D523-89 (1999), Standard Test Method for Specular Gloss.

ASTM D660-93 (2000), Standard Test Method for Evaluating Degree of Checking of Exterior Paints.

[1]ASTM publications are available from the American Society for Testing and Materials, 100 Barr Harbor Drive, West Conshohocken, PA 19428-2959, USA (http://www.astm.org/).

Copyright © 2003 IEEE. All rights reserved.

Copyright The Institute of Electrical and Electronics Engineers, Inc.
Provided by IHS under license with IEEE
No reproduction or networking permitted without license from IHS
Not for Resale

ASTM D714-87 (2000), Standard Test for Evaluating Degree of Blistering of Paints.

ASTM D1654-92 (2002), Standard Test Method for Evaluation of Painted or Coated Specimens Subjected to Corrosive Environments.

ASTM D2794-93 (2000-e1), Standard Test Method for Resistance of Organic Coatings to the Effects of Rapid Deformation (Impact).

ASTM D3170-01, Standard Test Method for Chipping Resistance of Coatings.

ASTM D3359-02, Standard Test Methods for Measuring Adhesion by Tape Test.

ASTM D3363-00, Standard Test Method for Film Hardness by Pencil Test.

ASTM D4060-01, Standard Test Method for Abrasion Resistance of Organic Coatings by the Taber Abraser.

ASTM D4585-99, Standard Practice for Testing Water Resistance of Coatings Using Controlled Condensation.

ASTM G154-00 (ae1), Standard Practice for Operating Fluorescent Light Apparatus for UV Exposure of Nonmetallic Materials.

SAE J400-2001, Test for Chip Resistance of Surface Coatings.[2]

3. Definitions

For the purposes of this standard, the following terms and definitions apply. IEEE 100 [B12] should be referenced for terms not defined in this clause.

3.1 carbon steel: A steel containing only residual quantities of elements other than carbon, except those added for deoxidation or to counter the deleterious effects of residual sulfur. Silicon is usually limited to about 0.60%, and manganese to about 1.65%. Also termed plain carbon steel, ordinary steel, straight carbon steel (see Bringas and Wayman [B11]).

3.2 conformance tests: Certain performance tests are conducted to demonstrate compliance with the applicable standards. The test specimen is normally subjected to all planned routine tests prior to initiation of the conformance test program.

NOTE—The conformance tests may, or may not, be similar to certain design tests. Demonstration of margins (capabilities) beyond the standard requirements is unnecessary.

3.3 design tests: Tests made by the manufacturer to determine the adequacy of the design of a particular type, or model of equipment, or its component parts to meet its assigned ratings and to operate satisfactorily under normal conditions and under special conditions if specified. These tests may be used to demonstrate compliance with applicable standards of the industry.

NOTE—Design tests, sometimes called type tests, are made on representative apparatus or prototypes to verify the validity of design analysis and calculation methods and to substantiate the ratings assigned to all other apparatus of basically the same design. These tests may also be used to evaluate the modification of a previous design and to ensure that performance has not been adversely affected. Test data from previous similar designs may be used for current designs, where appropriate. Once made, the tests need not be repeated unless the design is changed so as to modify performance.

[2]SAE publications are available from the Society of Automotive Engineers, 400 Commonwealth Drive, Warrendale, PA 15096, USA (http://www.sae.org/).

Copyright © 2003 IEEE. All rights reserved.

Copyright The Institute of Electrical and Electronics Engineers, Inc.
Provided by IHS under license with IEEE
No reproduction or networking permitted without license from IHS Not for Resale

3.4 film thickness: The thickness of any applied coating(s) measured after curing.

3.5 routine tests: Tests made for quality control by the manufacturer on every device or representative samples, or on parts or materials as required to verify during production that the product meets the design specifications and applicable standards.

NOTES

1—Certain quality assurance tests on identified critical parts of repetitive high-production devices may be tested on a planned statistical sampling basis.

2—"Routine tests" are sometimes called "production tests."

4. Enclosure design and coating system requirements

4.1 Enclosure design requirements—objective

The objective of this section is to describe design and performance requirements for carbon steel pole-mounted enclosures. Other stringent performance requirements may be needed to ensure long field life in special or coastal environments.

4.1.1 Accessibility

The enclosure shall be designed such that all exterior surfaces are accessible for proper surface preparation and the application of a uniform amount of the coating materials. Additionally, all exterior surfaces of the enclosure shall be accessible for the purposes of inspection and maintenance of the enclosure over the life of the equipment.

4.1.2 Contaminant accumulation

The enclosure shall be designed to shed water and minimize areas where corrosive elements can accumulate.

4.1.3 Welds—surface preparation

All welds shall be treated to prepare the weld area and the heat affected zones for coating. Weld splatter shall be removed. All welds shall be made in accordance with appropriate industrial welding standards.

4.2 Substrate requirements

The substrate shall be a material that, when coated or otherwise processed, will maintain the structural integrity of the enclosure over the life of the apparatus.

4.3 Coating system requirements

4.3.1 General

All coated surfaces on the exterior of the enclosure that may be exposed to the environments shall be capable of meeting the performance tests required by this standard.

Copyright © 2003 IEEE. All rights reserved.

Copyright The Institute of Electrical and Electronics Engineers, Inc.
Provided by IHS under license with IEEE
No reproduction or networking permitted without license from IHS
Not for Resale

4.3.2 Specification of coating characteristics

If more than one coating system is used for different areas of the enclosure, the areas in which each is used shall be identified. The laboratory test performance data of each coating system shall be identified. The laboratory test performance data of each coating system shall be submitted for approval upon request. This data shall be resubmitted whenever there are changes in the method and/or materials.

4.3.3 Coating touch-up prior to shipment

Touch-up, when required, shall be done at final inspection before any equipment is shipped. In areas where the integrity of the coating system is violated, the touch-up shall blend smoothly and meet all performance criteria of the original coating.

4.3.4 Enclosure color

Unless otherwise specified, the topcoat color shall be Munsell number 5BG 7.0/0.4 (ANSI Gray No. 70).

4.4 Coating system test specimens

Test specimens shall consist of panels of the same material composition used in production. Test specimens shall be in accordance with Figure A.1, Figure A.2, Figure A.3, and Figure A.4 as to size and type. Quantity and type of panels in each test are identified under the specific test. All panels shall be cleaned, coated, and cured using the production coating system. Coated test panels shall be conditioned at room temperature and humidity for a minimum of 7 days prior to any testing.

4.5 Coating system performance requirements

4.5.1 Salt spray test

Three coated panels, per Figure A.1, shall be scribed per ASTM D1654-92 and tested for 1000 hours in a 5% salt spray in accordance with ASTM B117-97. The scribe shall be prepared for evaluation using ASTM D1654-92, procedure A, method 2. The scribe shall be divided into 6 mm zones[3] and the worst spot in each zone will be evaluated (except the first 6 mm of the scribe at each end of the scribe line[4]). The average of the 14 readings shall be rated per ASTM D1654-92, Table 1. After a rating has been set for each of the three panels, the average rating of the three shall not be less than a 6 rating. The area away from the scribe shall have no blisters.

4.5.2 Cross hatch adhesion test

One coated test panel, per Figure A.2, shall be scribed to bare metal in accordance with ASTM D3359-97. Method A shall be used for films thicker than 0.13 mm,[5] and method B shall be used for films less than or equal to 0.13 mm.[6] There shall be 100% adhesion to the substrate and between layers. A rating of 5A for method A and 5B for method B per ASTM D3359-97 is required.

---

[3] 6 mm = 0.25 in

[4] See footnote 3.

[5] 0.13 mm = 5 mils = .005 in

[6] See footnote 5.

Copyright © 2003 IEEE. All rights reserved.

--`,,`-`-`,,`,,`,`,,`---

Copyright The Institute of Electrical and Electronics Engineers, Inc.
Provided by IHS under license with IEEE
No reproduction or networking permitted without license from IHS Not for Resale

4.5.3 Humidity test

Two coated panels, per Figure A.1, shall be tested for 1000 hours in accordance with ASTM D4585-99 except that the test shall be conducted at 45° ± 1° C.[7] Upon completion of the test, panels shall be evaluated for:

a) Blistering—There shall be no blistering observed on the surface of the panels when inspected within 15 minutes after removal from the cabinet.
b) Softening—After removal from the cabinet, allow the panels to air dry for 24 ± 1 hours. There shall be no more than one pencil hardness change when tested per ASTM D3363-00.

Any color change shall be noted.

4.5.4 Impact test

The following test is required for all coated surfaces on the exterior of the pole mounted equipment but does not apply to the cover and ring. One coated panel, prepared per Figure A.2, shall be impacted at room temperature on a concrete floor using procedures described in ASTM D2794-93 with an impact energy of 9.0 Joules (9.0 newton meters).[8] The impacted test panels shall be exposed to 24 hours of salt spray per ASTM B117-97. There shall be no red rust visible in the impact (intrusion) area of the panel.

4.5.5 Insulating fluid resistance tests (for liquid filled equipment only)

Partially immerse one coated panel, per Figure A.2, in the insulating liquid for 72 hours at 100 °C–105 °C.[9] On the immersed portion of the panel, there shall be no loss of adhesion per ASTM D3359-97, no blisters, no streaking, and no more than one pencil hardness change per ASTM D3363-00, using either method. Any color shift shall be noted.

4.5.6 Ultraviolet accelerated weathering (QUV) test

The following test is required for all coated surfaces on the exterior of the pole-mounted equipment. Expose two test panels, per Figure A.2, for 500 hours per ASTM G154-00, utilizing the FS-40 bulb with a cycle of 4 hours ultraviolet at 60 °C followed by 4 hours condensation at 50 °C.[10,11] Loss of gloss shall not exceed 50% of original gloss per ASTM D523-89. The coating shall not exhibit cracking or crazing under unaided visual inspection.

4.5.7 QUV and simulated corrosive atmospheric breakdown (SCAB)

Three coated panels, per Figure A.1, shall be prepared and tested in accordance with the procedure described in Annex A. The scribe shall be prepared for evaluation using ASTM D1654-92, procedure A, method 2. Upon completion of 10 cycles of SCAB, the scribe line shall be divided into 6 mm zones and the worst spot in each zone will be evaluated by measuring the amount of creepage along the scribe line (except the first 6 mm of the scribe at each end of the scribe line).[12] The average of the 14 readings shall be rated per ASTM D1654-92, Table 1. After a rating has been set for each of the three panels, the average rating of the three shall not be less than a 6 rating. The area away from the scribe shall have no blisters.

[7] 45° ± 1° C = 113 °F ± 2 °F
[8] 9.0 newton meters = 80 inch-pounds force
[9] 100 °C–105 °C = 212 °F –221 °F
[10] 60 °C = 140 °F
[11] 50 °C = 122 °F
[12] See footnote 3.

Copyright © 2003 IEEE. All rights reserved.

Copyright The Institute of Electrical and Electronics Engineers, Inc.
Provided by IHS under license with IEEE
No reproduction or networking permitted without license from IHS
Not for Resale

4.5.8 Abrasion resistance Taber Abraser

The following test is required for all coated surfaces on the exterior of the pole-mounted equipment but does not apply to the cover and ring. One coated panel, per Figure A.3, having the minimum dry film thickness of the total coating system shall be tested using CS-10 wheel, 1000 gram weight, in accordance with ASTM D4060-01. A total number of 3000 cycles shall be run with the wheels resurfaced before testing and after each 500 cycle run. The abraded panel shall be exposed to 24 hours of salt spray per ASTM B117-97. There shall be no visible red rust.

4.5.9 Gravelometer

Two coated panels per Figure A.4 are to be tested per ASTM D3170-01 at room temperature using 410 kPa gauge air pressure.[13] Expose the test panels for 24 hours in salt spray per ASTM B117-97. Remove from salt spray, rinse, and dry panels. Evaluate panels per SAE J400-2001 for quantity and size of rusted chipped areas. Minimum rating shall be 4B per SAE J400-2001.

5. General

5.1 Shipment

The manufacturer shall provide a method of shipment that will allow the enclosure to be received by the purchaser such that it still meets the performance tests required by this standard.

5.2 Coating repair procedure

A coating system repair procedure shall be recommended by the manufacturer.

[13] 410 kPa = 60 psi

Copyright © 2003 IEEE. All rights reserved.

Copyright The Institute of Electrical and Electronics Engineers, Inc.
Provided by IHS under license with IEEE
No reproduction or networking permitted without license from IHS Not for Resale

Annex A

(normative)

QUV and SCAB Procedure

a) The three panels prepared per 4.4 and evaluated per 4.5.7 are to be tested per ASTM G154-00 (ultraviolet accelerated weathering) for 504 hours. Test equipment with FS-40 bulbs and the cycle set for 4 hours ultraviolet at 60 °C ± 2 °C, followed by 4 hours condensation at 50 °C ± 2 °C is to be used. No evaluation is necessary after test as this is a conditioning step.[14, 15]

b) Scribe the panels in accordance with ASTM D1654-92 and as shown in Figure A.1.

c) Place the test panel (scribed side facing up) in a plastic or wood rack with the scribe line in a vertical position. The rack shall hold the panels at a 15° (± 5°) angle from the vertical. Multiple panels in the test rack should not touch one another.

d) Expose the panels for the specified number of cycles. (One weekday equals one cycle.)
   1) Mondays only
      i) One hour in oven at 60 °C ± 2 °C.[16]
      ii) 15 min in freezer at –23 °C ± 2 °C.[17] Panel should be transferred into freezer within 1 min after removal from the oven.
      iii) Remove the panels from the freezer and immerse in a 5% NaCl solution for 15 min. The NaCl solution should be at room temperature. The panel transfer time from freezer to the NaCl immersion should be less than 1 min.
      iv) Remove from NaCl bath and let hang in room temperature and humidity atmosphere for 1 hour 15 min.
      v) Place panel in 60 °C ± 2 °C and 85% ± 3% relative humidity cabinet for 21 hours.[18]
   2) Tuesday through Friday
      i) Test panels to be immersed in 5% NaCl solution for 15 min. The NaCl solution should be at room temperature.
      ii) Allow the test panels to age at room temperature and humidity for 1 hour 15 min.
      iii) Place the test panels in 60 °C ± 2 °C and 85% ± 3% relative humidity cabinet for 22 hours 30 min.[19]
   3) Saturdays and Sundays: Leave the test panel in the humidity cabinet at 60 °C ± 2 °C and 85% relative humidity.[20]
   4) Monday (last day): Remove the test panels from the humidity cabinet and evaluate per 4.5.7.

[14] 60 °C ± 2 °C = 140 °F ± 4 °F
[15] 50 °C ± 2 °C = 122 °F ± 4 °F
[16] See footnote 14.
[17] –23 °C ± 2 °C = –10 °F ± 4 °F
[18] See footnote 14.
[19] See footnote 14.
[20] See footnote 14.

Copyright © 2003 IEEE. All rights reserved.

Copyright The Institute of Electrical and Electronics Engineers, Inc.
Provided by IHS under license with IEEE
No reproduction or networking permitted without license from IHS
Not for Resale

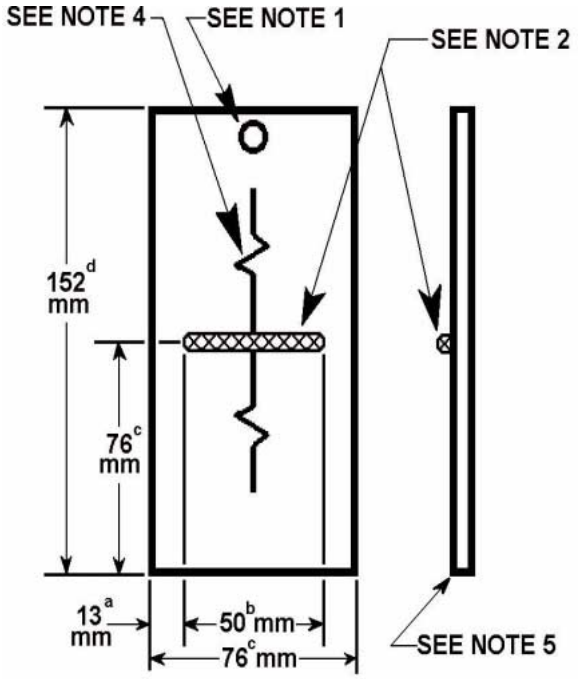

Figure A.1—Corrosion paint test panel

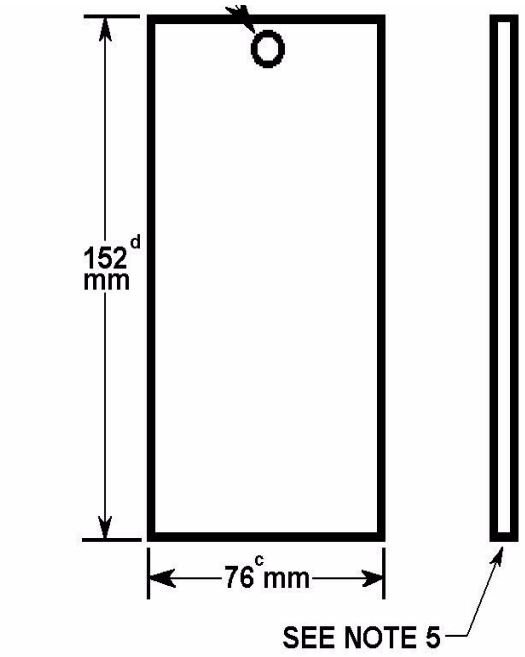

Figure A.2—Plain paint test panel

Copyright © 2003 IEEE. All rights reserved.

Copyright The Institute of Electrical and Electronics Engineers, Inc.
Provided by IHS under license with IEEE
No reproduction or networking permitted without license from IHS
Not for Resale

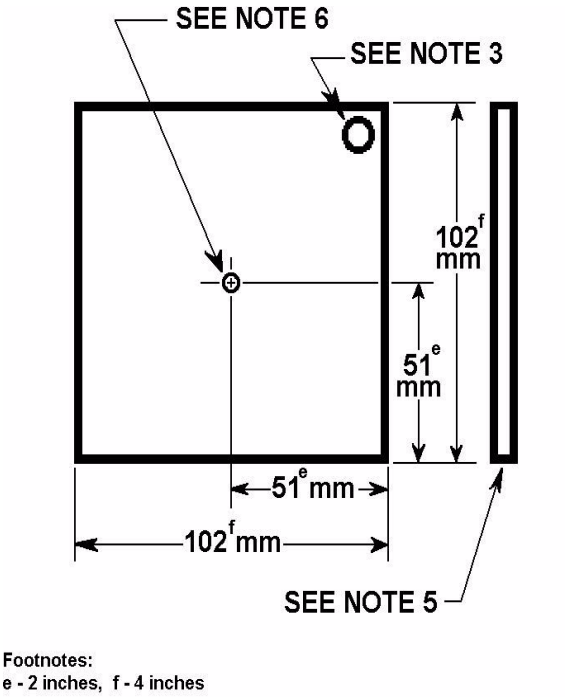

Figure A.3—Taber Abraser paint test panel

NOTES

1—Hole can be placed in panel for hanging for paint operations if required. Locate centered on short dimension and 3 mm to edge of hole on long dimension. Recommended maximum hole size 14 mm diameter.

2—Weld bead to be the same type metal composition as the panel. Weld bead to be 6 mm wide and 3 mm high.

3—Hole can be placed in panel for hanging. To be located in one corner. Recommended maximum hole size 14 mm diameter.

4—Scribe per ASTM D1654-92 across weld approximately 100 mm scribe length.

5—Test panels shall be made from typical production stock of the same material type and thickness used in the construction of the device for which the specified test is intended.

6—6 mm diameter hole may require reaming to fit Taber Abraser post.

Copyright © 2003 IEEE. All rights reserved.

Copyright The Institute of Electrical and Electronics Engineers, Inc.
Provided by IHS under license with IEEE
No reproduction or networking permitted without license from IHS
Not for Resale

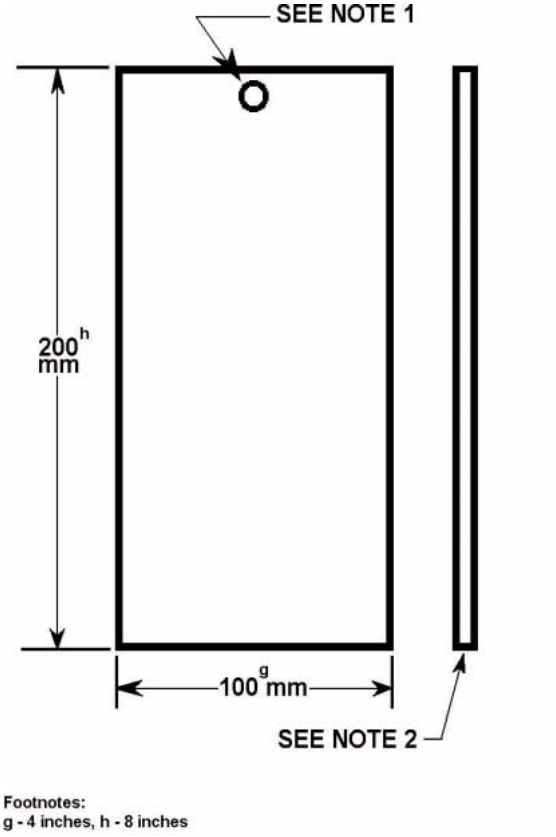

Figure A.4—Gravelometer paint test panel

NOTES

1—Hole can be placed in panel for hanging for paint operations if required. Locate centered on short dimension and 3 mm to edge of hole on long dimension. Recommended maximum hole size 14 mm diameter.

2—Panel thickness to be of typical production stock used in the manufacture of devices test is intended for.

Copyright © 2003 IEEE. All rights reserved.

Copyright The Institute of Electrical and Electronics Engineers, Inc.
Provided by IHS under license with IEEE
No reproduction or networking permitted without license from IHS
Not for Resale

Annex B

(informative)

Bibliography

[B1] Accredited Standards Committee C2-1997, National Electrical Safety Code® (NESC®).[21]

[B2] ANSI C57.12.20-1997, American National Standard for Overhead Distribution Transformers, 500 kVA and Smaller: High Voltage, 34 500 V and below: Low Voltage 7970/13 800 Y V and below—Requirements.

[B3] ANSI C57.12.28-1999, American National Standard Pad-Mounted Equipment—Enclosed Integrity.

[B4] ANSI C57.12.29-1991, American National Standard Switchgear and Transformers—Pad-Mounted Equipment—Enclosure Integrity for Coastal Environments.

[B5] ANSI/IEEE C41.100, Standard Dictionary of Electrical Electronics Terminology.

[B6] Bringas, John E., and Wayman, Michael L., *The Metals Black Book, Ferrous Metals*, 3d ed, Edmonton, Alberta, Canada: CASTI Publishing Inc., 1998.

[B7] IEEE 100™, *The Authoritative Dictionary of IEEE Standards Terms*, Seventh Edition, New York, Institute of Electrical and Electronics Engineers, Inc.[22]

[B8] IEEE Std C57.12.26™-1992, IEEE Standard for Pad-Mounted, Compartmental-Type, Self-Cooled, Three-Phase Distribution Transformers for Use with Separable Insulated High-Voltage Connectors (34 500 GrdY/19 920 Volts and Below; 2500 kVA and Smaller).

[B9] IEEE Std C57.12.32™-2002, IEEE Standard for Submersible Equipment—Enclosure Integrity.

[B10] IEEE Std C57.12.35™-1996, IEEE Standard for Bar Coding for Distribution Transformers.

[B11] IEEE Std C57.15™-1999, IEEE IEEE Standard Requirements, Terminology, and Test Code for Step-Voltage Regulators.

[21]National Electrical Safety Code and NESC are both registered trademarks and service marks of the Institute of Electrical and Electronics Engineers, Inc.

[22]The IEEE standards or products referred to in Annex B are trademarks owned by the Institute of Electrical and Electronics Engineers, Incorporated.

Copyright © 2003 IEEE. All rights reserved.

Copyright The Institute of Electrical and Electronics Engineers, Inc.
Provided by IHS under license with IEEE
No reproduction or networking permitted without license from IHS Not for Resale

Copyright The Institute of Electrical and Electronics Engineers, Inc.
Provided by IHS under license with IEEE
No reproduction or networking permitted without license from IHS
Not for Resale