American National Standard for Transformers—Underground-Type Three-Phase Distribution Transformers, 2500 kVA and Smaller; High Voltage, 34 500 GrdY/19 920 Volts and Below; Low Voltage, 480 Volts and Below—Requirements

Approved June 30, 2000

American National Standards Institute, Inc.

The Institute of Electrical and Electronics Engineers, Inc.
3 Park Avenue, New York, NY 10016-5997, USA

Copyright © 2003 by the Institute of Electrical and Electronics Engineers, Inc.
All rights reserved. Printed in the United States of America.

Print: ISBN 0-7381-3628-X SH95110
PDF: ISBN 0-7381-3653-0 SS95110

No part of this publication may be reproduced in any form, in an electronic retrieval system or otherwise, without the prior written permission of the publisher.

Copyright The Institute of Electrical and Electronics Engineers, Inc.
Provided by IHS under license with IEEE
No reproduction or networking permitted without license from IHS Not for Resale

American National Standard

Approval of an American National Standard requires verification by ANSI that the requirements for due process, consensus, and other criteria for approval have been met by the standards developer.

Consensus is established when, in the judgment of the ANSI Board of Standards Review, substantial agreement has been reached by directly and materially affected interests. Substantial agreement means much more than a simple majority, but not necessarily unanimity. Consensus requires that all views and objections be considered, and that a concerted effort be made toward their resolution.

The use of American National Standards is completely voluntary; their existence does not in any respect preclude anyone, whether he has approved the standards or not, from manufacturing, marketing, purchasing, or using products, processes, or procedures not conforming to the standards.

The American National Standards Institute does not develop standards and will in no circumstances give an interpretation of any American National Standard. Moreover, no person shall have the right or authority to issue an interpretation of an American National Standard in the name of the American National Standards Institute. Requests for interpretations should be addressed to the secretariat or sponsor whose name appears on the title page of this standard.

DISCLAIMER: The standards or guidelines presented in a NEMA Standards Publication are considered technically sound at the time they are approved for publication. They are not a substitute for a product seller's or user's own judgment with respect to the particular product referenced in the standard or guideline, and NEMA does not undertake to guaranty the performance of any individual manufacturer's products by virtue of this standard or guide. Thus, NEMA expressly disclaims any responsibility for damages arising from the use, application, or reliance by others on the information contained in these standards or guidelines.

CAUTION NOTICE: This American National Standard may be revised or withdrawn at any time. The procedures of the American National Standards Institute require that action be taken periodically to reaffirm, revise, or withdraw this standard. Purchasers of American National Standards may receive current information on all standards by calling or writing the American National Standards Institute.

Copyright The Institute of Electrical and Electronics Engineers, Inc.
Provided by IHS under license with IEEE
No reproduction or networking permitted without license from IHS
Not for Resale

CONTENTS

Foreword v

1 Scope 1

2 References 1

3 Ratings 1
3.1 Kilovolt-ampere ratings 1
3.2 Voltage ratings and tap ratings 2

4 Insulation levels 3

5 Impedance 3
5.1 Percent impedance 3
5.2 Impedance tolerance 3
5.3 Tolerance on impedance on a tap 4

6 Tests 4
6.1 General 4
6.2 Reference temperature 4

7 Construction 4
7.1 General 4
7.2 Bushings and terminals 7
7.2.1 Electrical characteristics 7
7.2.2 Neutral terminal connection 10
7.3 Accessory equipment and marking requirements 10
7.3.1 Liquid-level marking 10
7.3.2 Lifting provisions 10
7.3.3 Terminal marking 10
7.3.4 Nameplate 10
7.3.5 Tap changer 11
7.4 Tanks 11
7.4.1 General 11
7.4.2 Covers 11
7.4.3 Handholes 11
7.4.4 Ground provisions 11
7.4.5 Finish 11
7.5 Audible sound levels 12

Copyright The Institute of Electrical and Electronics Engineers, Inc.
Provided by IHS under license with IEEE
No reproduction or networking permitted without license from IHS
Not for Resale

--`,,`-`-`,,`,,`,`,,`---

Copyright The Institute of Electrical and Electronics Engineers, Inc.
Provided by IHS under license with IEEE
No reproduction or networking permitted without license from IHS

Not for Resale

Foreword (This Foreword is not part of American National Standard C57.12.24-2000)

The Accredited Standards Committee on Transformers, Regulators, and Reactors, C57, has for a number of years been developing and correlating standards on transformers and regulators. The data used in this work has been gathered from many sources, including the standards of the Institute of Electrical and Electronics Engineers and the National Electrical Manufacturers Association, reports of committees of the Edison Electric Institute, and others.

The graphics and detailed work required to produce this standard were provided by Mike Boulware of ABB Power T&D Company, Inc. of South Boston, Virginia.

Suggestions for improvement of this standard will be welcome. They should be sent to the National Electrical Manufacturers Association, 1300 N. 17th Street, Rosslyn, Virginia 22209.

This standard was processed and approved for submittal to ANSI by Accredited Standards Committee C57 on Transformers, Regulators, and Reactors. Committee approval of the standard does not necessarily imply that all committee members voted for its approval. At the time it approved this standard, the C57 Committee had the following members:

J. D. Borst, Chairman
J. A. Gauthier, Secretary

Organization Represented	*Name of Representative*
U.S. Dept. of Energy Western Area Power Administration	Kenneth C. Wolohon
Dept. of the Navy, Civil Engineer Corps.	Peyton E. Glenn, Jr.
Dept. of the Interior, Bureau of Reclamation	Boyd Leuenberger
Dept. of Agriculture, R.E.A.	Mehrdad Eskandary
Tennessee Valley Authority	F. Lewis
Underwriters Laboratories, Inc.	M. Shacker
Electric Light & Power Company (EL&P)	P. Orehek, Chairman Carl G. Niemann T. Diamantis K. S. Hanus Gary Miller (Alt.) Glenn Anderson J. Sullivan
Institute of Electrical and Electronics Engineers	W. B. Binder, Chairman J. D. Borst J. W. Matthews B. Patel T. Prevost Jin Sim (Alt.)

Copyright The Institute of Electrical and Electronics Engineers, Inc.
Provided by IHS under license with IEEE
No reproduction or networking permitted without license from IHS
Not for Resale

National Electrical Manufacturers Association (NEMA)	D. Rollings, Chairman of Delegation G. D. Coulter P. J. Hopkinson R. Plaster H. Robin H. Jin Sim (Alt.)

At the time that this standard was approved, the Working Group had the following membership:

C. G. Niemann, **Chairperson**

B. Klaponski	R. Fisher	R. Graham	J. Somma
W. McCain	P. Orehek	J. Sullivan	G. Miller
P. Risse	W. Wimmer	J. Harper	J. Moffat
A. Robinson	D. Mulkey	R. Hayes	I. Hussain

--`,,`-`-`,,`,,`,`,,`---

Copyright The Institute of Electrical and Electronics Engineers, Inc.
Provided by IHS under license with IEEE
No reproduction or networking permitted without license from IHS

Not for Resale

1 Scope

1.1 This standard is intended to set forth characteristics relating to performance, limited electrical and mechanical interchangeability, and safety of the equipment described, and to assist in the proper selection of such equipment.

1.2 This standard describes certain electrical and mechanical characteristics and takes into consideration certain safety features of three phase, 60-Hz, liquid-immersed, self-cooled, underground-type distribution transformers rated 2500 kVA and smaller with high voltages of 34 500GrdY/19 920 volts and below and with low voltages of 480 volts and below. These transformers are generally used for step-down purposes from an underground primary cable supply and are suitable for occasional submerged operation.

2 References

When an American National Standard referred to in this document is superseded by a revision approved by the American National Standards Institute, Inc., the revision shall not apply. The referenced standard and the specific referenced edition shall be the applicable referenced standard until the new version of the referenced document is incorporated by formal action or appropriate revision of the citing standard.

ANSI C57.12.70-1978 (R 1987), *Terminal Markings and Connections for Distribution and Power Transformers*

ANSI C84.1 - 1995, *Electrical Power Systems and Equipment - Voltage Ratings (60 Hertz)*

ANSI/ASME B1.1-1989, *Unified Inch Screw Threads (un and unr thread form)*

ANSI/IEEE 100-1996, *Dictionary of Electrical and Eectronics Terms*

ANSI/IEEE 386-1995, *Separable Insulated Connector Systems for Power Distribution Systems Above 600 V*

ANSI/IEEE C57.12.00-1993, *General Requirements for Liquid-immersed Distribution, Power, and Regulating Transformers.*

ANSI/IEEE C57.12.32 -1994, *Submersible Equipment - Enclosure Integrity*

ANSI/IEEE C57.12.80-1978 (R 1992), *Terminology for Power and Distribution Transformers*

ANSI/IEEE C57.12.90-1993, *Test Code for Liquid-immersed Distribution, Power, and Regulating Transformers and Guide for Short-circuit Testing of Distribution and Power Transformers*

ANSI/IEEE C57.91-1995, *Distribution Transformers rated 500 kVA and Less with 55°C or 65°C Average Winding Rse, Guide for Loading Mineral Oil-immersed Overhead and Padmounted Transformers.*

3 Ratings

3.1 Kilovolt-ampere ratings

3.1.1 Kilovolt-ampere (kVA) ratings are continuous and are based on not exceeding a 55°C average winding temperature rise and a 70°C hottest-spot temperature rise. The temperature rise of the insulating

Copyright The Institute of Electrical and Electronics Engineers, Inc.
Provided by IHS under license with IEEE
No reproduction or networking permitted without license from IHS

Copyright © 2003 IEEE. All rights reserved.
Not for Resale

liquid shall not exceed 55°C when measured near the top of the tank. The transformers shall have a 65°C temperature-rise insulation system.

3.1.2 Transformers conforming to this standard shall be suitable for continuous operation at rated kVA, provided that the temperature of the cooling air (enclosure ambient temperature) does not exceed 50°C and the average temperature of the cooling air does not exceed 40°C for any 24-hour period. For loading beyond rated kVA, refer to loading guide ANSI/IEEE C57.91.

3.1.3 Nonsymmetrical unbalanced excitation or loading of wye-wye-connected units may cause heating of their tanks in excess of that which would be produced by balanced conditions. To reduce the probability of this tank heating, such a unit shall be provided with a core construction that will not saturate when 33-percent zero sequence voltage is applied.

3.2 Voltage ratings and tap ratings

Voltage and tap ratings shall be in accordance with Tables 1 and 2, respectively.

Table 1 – Range of kilovolt-ampere and voltage ratings

Primary rating (volts)	kVA Rating	
	Secondary rating 208Y/120, 240 volts	Secondary rating 480Y/277, 480 volts
Delta or wye:		
2400	75 - 750	75 - 750
4160	75 - 1000	75 - 1000
4800	75 - 1000	75 - 1500
7200	75 - 1000	75 - 2000
12 000, 12 470	75 - 1000	75 - 2500
13 200, 13 800	75 - 1000	75 - 2500
Grounded wye:		
22 860/23 900/24 940/34 500	75 - 1000	75 - 2500

NOTES:
1. This table applies to terminal voltages only and does not indicate internal transformer connections.
2. Kilovolt-ampere ratings separated by a dash indicate that all intervening ratings covered in this standard are included.
3. For complete connector ratings, see ANSI/IEEE 386 - 1995.

Copyright The Institute of Electrical and Electronics Engineers, Inc.
Provided by IHS under license with IEEE
No reproduction or networking permitted without license from IHS

Copyright © 2003 IEEE. All rights reserved.
Not for Resale

Table 2 – Primary insulation levels and taps

Primary rating (volts)	BIL (kV)	Primary taps *			
		75 - 500 kVA rating			
		Secondary 208Y/120	Secondary 240,480Y/277, 480		
		Below	Above	Below	750 - 2500 kVA rating
Delta or wye:					
2400	45	4-2 1/2%	2-2 1/2%	2-2 1/2%	2520/2460/2340/2280
4160	60	4-2 1/2%	2-2 1/2%	2-2 1/2%	4360/4260/4055/3950
4800	60	4-2 1/2%	2-2 1/2%	2-2 1/2%	5040/4920/4680/4560
7200	75	4-2 1/2%	2-2 1/2%	2-2 1/2%	7560/7380/7020/6840
12 000	95	4-2 1/2%	2-2 1/2%	2-2 1/2%	12 600/12 300/11 700/11 400
12 470	95	4-2 1/2%	2-2 1/2%	2-2 1/2%	13 090/12 780/12 160/11 850
13 200	95	4-2 1/2%	2-2 1/2%	2-2 1/2%	13 860/13 530/12 870/12 540
13 800	95	4-2 1/2%	**	**	14 400/14 100/13 500/13 200
Grounded wye:					
22 860GrdY/13 200	125	4-2 1/2%	2-2 1/2%	2-2 1/2%	24 003/23 431/22 288/21 717
23 900GrdY/13 800	125	4-2 1/2%	2-2 1/2%	2-2 1/2%	25 095/24 497/23 302/22 705
24 940GrdY/14 400	125	4-2 1/2%	2-2 1/2%	2-2 1/2%	26 187/25 563/24 316/23 693
34 500GrdY/19 920	150	4-2 1/2%	2-2 1/2%	2-2 1/2%	36 225/35 363/33 638/32 775

* Primary windings without taps may be provided.
** Same taps as for 750 - 2500 kVA sizes (see last column).

4 Insulation levels

4.1 Primary insulation levels shall be as shown in Table 2. Secondary insulation levels shall be 30 kV with a 1.2 kV insulation class.

4.2 Dielectric test levels shall be in accordance with ANSI/IEEE C57.12.00.

5 Impedance

5.1 Percent impedance

The percent impedance on the rated voltage connection shall be as shown in Table 3.

Table 3 – Percent impedance

kVA rating	Percent impedance
75	1.00-5.00
112.5-300	1.20-6.00
500	1.50-7.00
750—2500	5.75

5.2 Impedance tolerance

The tolerance shall be as specified in ANSI/IEEE C57.12.00.

Copyright The Institute of Electrical and Electronics Engineers, Inc.
Provided by IHS under license with IEEE
No reproduction or networking permitted without license from IHS

Copyright © 2003 IEEE. All rights reserved.
Not for Resale

5.3 Tolerance on impedance on a tap

The percent departure of the actual impedance on any tap from the actual impedance at the rated voltage shall not be greater than the total tap voltage range expressed as a percentage of the rated voltage.

6 Tests

6.1 General

All tests shall be performed in accordance with ANSI/IEEE C57.12.00 and C57.12.90.

6.2 Reference temperature

The reference temperature to which load losses, impedance, regulation, and efficiency are corrected shall be 85°C.

7 Construction

7.1 General

The transformer shall include primary bushing wells and secondary terminations.

7.1.1 Devices such as separable connectors, switch handles, plug-in terminators, and replaceable fuses, which are designed for operation after the transformer is in place, shall be located on the transformer cover so that they can be operated from above with hot-line tools.

7.1.2 Mineral-oil-immersed transformers shall have dimensions not exceeding those as shown in Figure 1.

Copyright The Institute of Electrical and Electronics Engineers, Inc.
Provided by IHS under license with IEEE
No reproduction or networking permitted without license from IHS

Copyright © 2003 IEEE. All rights reserved.
Not for Resale

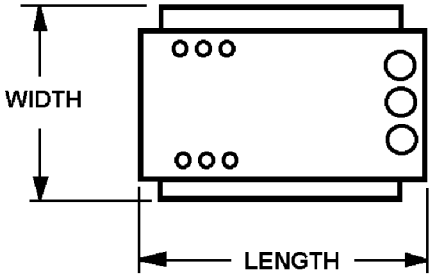

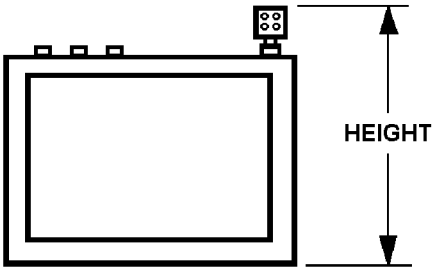

Rectangular transformers

kVA	Width m (in)	Length m (in)	Height m (in)
150 kV BIL			
500	1.52 (60)	2.44 (96)	1.96 (77)
750	1.52 (60)	2.44 (96)	2.34 (92)
1000	1.83 (72)	2.75 (108)	2.36 (93)
1500	1.83 (72)	2.75 (108)	2.46 (97)
2000	2.13 (84)	3.05 (120)	2.87 (113)
2500	2.13 (84)	3.05 (120)	2.97 (117)
125 kV BIL			
300	1.14 (45)	1.85 (73)	1.83 (72)
500	1.32 (52)	2.03 (80)	1.91 (75)
750	1.35 (53)	2.23 (88)	2.18 (86)
1000	1.42 (56)	2.34 (92)	2.29 (90)
1500	1.68 (66)	2.49 (98)	2.46 (97)
2000	1.91 (75)	2.67 (105)	2.87 (113)
2500	2.03 (80)	2.92 (115)	2.97 (117)

Rectangular transformers

kVA	Width m (in)	Length m (in)	Height m (in)
95 kV BIL and below			
75	0.94 (37)	1.60 (63)	1.52 (60)
112.5	0.96 (38)	1.60 (63)	1.52 (60)
150	0.96 (38)	1.60 (63)	1.52 (60)
225	0.96 (38)	1.60 (63)	1.52 (60)
300	1.07 (42)	1.68 (66)	1.70 (67)
500	1.12 (44)	1.83 (72)	1.70 (67)
750	1.17 (46)	2.03 (80)	2.08 (82)
1000	1.32 (52)	2.18 (86)	2.11 (83)
1500	1.55 (61)	2.31 (91)	2.46 (97)
2000	1.75 (69)	2.41 (95)	2.72 (107)
2500	1.80 (71)	2.64 (104)	2.97 (117)

Round transformers

kVA	Diameter m (in)
95 kV BIL and below	
75	0.86 (34)
112.5	0.86 (34)
150	1.02 (40)
225	1.02 (40)

Note: Depending on the accessories required, it may not be possible to construct a unit to these maximum dimensions. Transformers with other insulating liquids may also require different dimensions.

Figure 1 — Maximum transformer dimensions for 150 kV BIL and below (based on mineral-oil filled units)

Copyright The Institute of Electrical and Electronics Engineers, Inc.
Provided by IHS under license with IEEE
No reproduction or networking permitted without license from IHS

Copyright © 2003 IEEE. All rights reserved.
Not for Resale

7.1.3 The transformer tank, cover, and all external appurtenances shall be of corrosion resistant material or shall be otherwise rendered corrosion resistant.

7.1.4 The transformer base structure shall consist of bars parallel to the long axis of the transformer. The base structure shall provide a 40mm (1 1/2-inch) minimum clearance from the floor to the tank bottom, with corners left clear for jacking.

7.1.5 The plan view of the transformer shall be in accordance with Figure 2 for the purpose of locating terminations and operating devices.

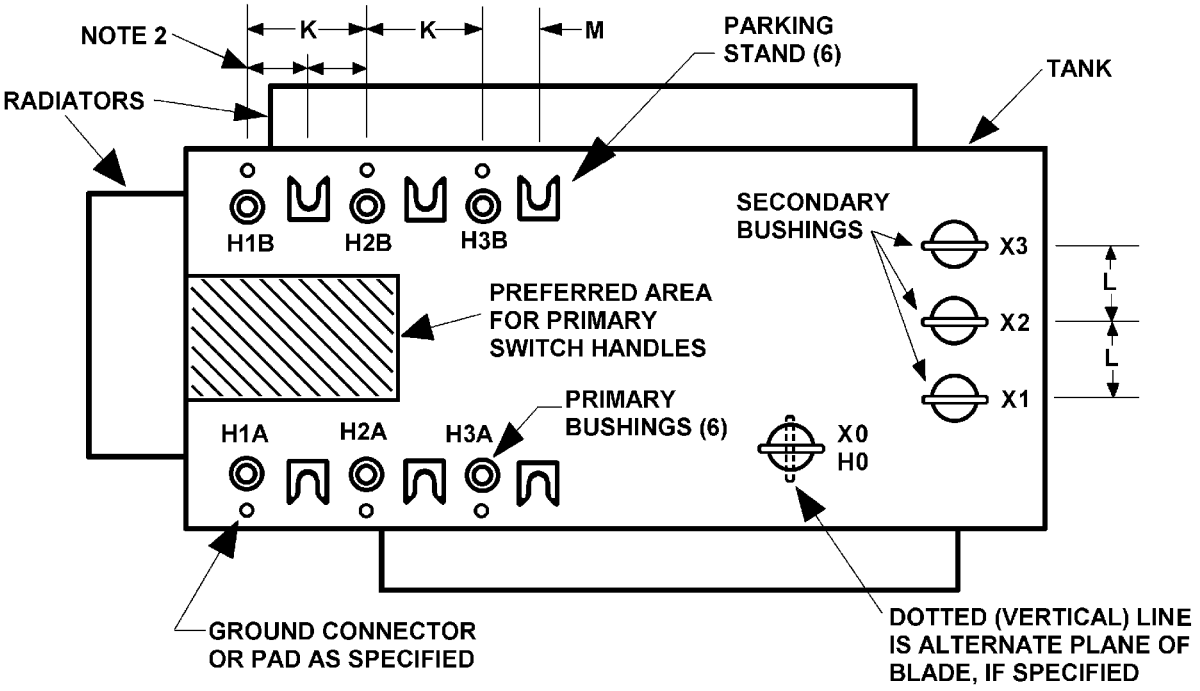

kVA ratings	Low-voltage bushings	Separable insulated connector primary ratings (kV)					
		8.3 and 8.3/14.4		15.2 and 15.2/26.3		21.1 and 21.1/36.5	
	L	K	M	K	M	K	M
300 and below	130 (5)	230 (9)	115 (4.5)	330 (13)	165 (6.5)	360 (14)	180 (7)
500 and above	150 (6)	230 (9)	115 (4.5)	330 (13)	165 (6.5)	360 (14)	180 (7)

NOTES:
1. H1B, H2B, and H3B, indicate the location of additional bushings for loop feed requirements.
2. Parking stands shall be centered between each pair of bushings and shall also be placed dimension “M” to the right of each rightmost bushing.
3. All dimensions are minimum and in mm followed by inches in parentheses.

Figure 2 – Preferred location of primary and secondary bushings and primary switch handles

Copyright The Institute of Electrical and Electronics Engineers, Inc.
Provided by IHS under license with IEEE
No reproduction or networking permitted without license from IHS

Copyright © 2003 IEEE. All rights reserved.
Not for Resale

7.1.6 Parking stands of series 304 stainless steel with 0.05% maximum carbon content shall be provided in accordance with figure 3.

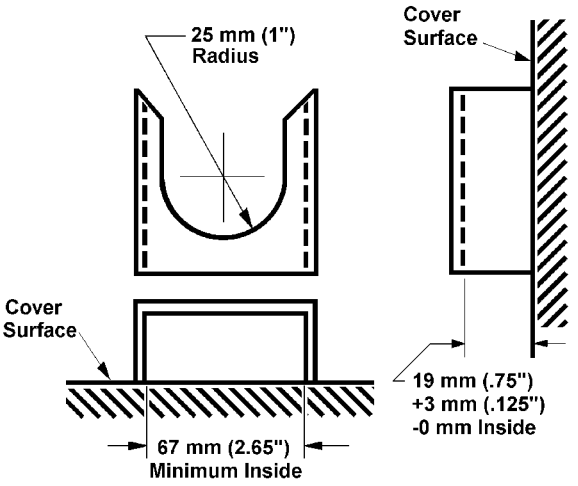

Figure 3 – Detail of parking stand

7.2 Bushings and terminals

7.2.1 Electrical characteristics

The electrical characteristics of the completely assembled high-voltage connectors and the low-voltage termination shall be as given in Table 4.

Table 4 – Electrical characteristics of transformer connectors

Winding insulation levels	Electrical characteristics of the completely assembled connectors*		
BIL (kV)	Voltage 7 (kV)	BIL (kV)	AC 60 Hz for 1 min. (kV)
30	1.2	30	10
45	8.3	95	34
60	8.3	95	34
75	8.3	95	34
95	(8.3 or 15.2)**	(95 or 125)**	(34 or 40)**
125	(15.2 or 21.1)**	125	40
150	21.1	150	50

* For complete primary connector ratings, see ANSI/IEEE 386-1985.
** Required connector rating should be specified.

7.2.1.1 The number, location, and arrangement of the primary terminals and secondary bushings shall be as shown in Figure 2.

7.2.1.2 Primary bushing wells shall be provided for connection to the distribution system. The bushing wells shall be welded to the cover.

Copyright The Institute of Electrical and Electronics Engineers, Inc.
Provided by IHS under license with IEEE
No reproduction or networking permitted without license from IHS

Copyright © 2003 IEEE. All rights reserved.
Not for Resale

7.2.1.3 The secondary terminals shall consist of plated copper spade or stud terminals in accordance with Figure 4.

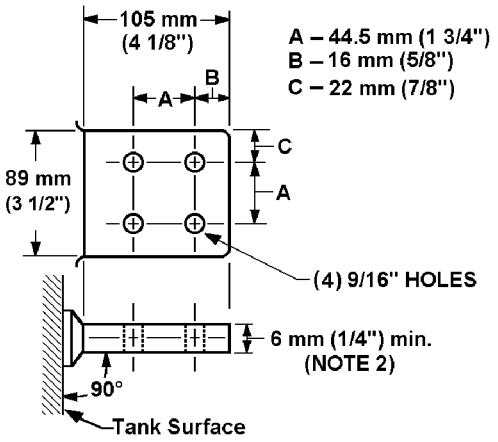

kVA ratings	Secondary ratings (volts)
75 - 300	208Y/120
75 - 500	240
75 - 500	480, 480Y/277

(a)

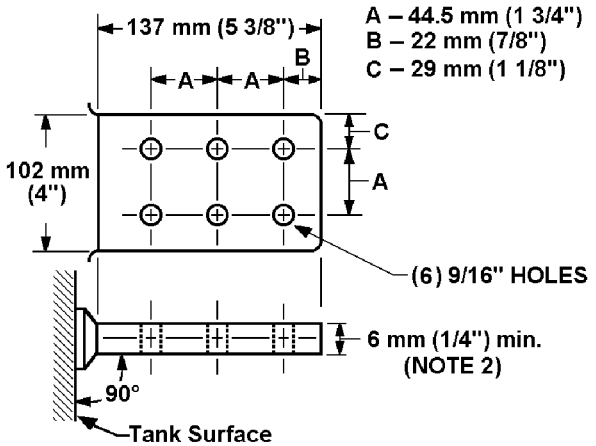

kVA ratings	Secondary ratings (volts)
500	208Y/120
750	240
750 - 1500	480, 480Y/277

(b)

Figure 4 – Secondary copper terminals (*continued*)

Copyright The Institute of Electrical and Electronics Engineers, Inc.
Provided by IHS under license with IEEE
No reproduction or networking permitted without license from IHS

Copyright © 2003 IEEE. All rights reserved.
Not for Resale

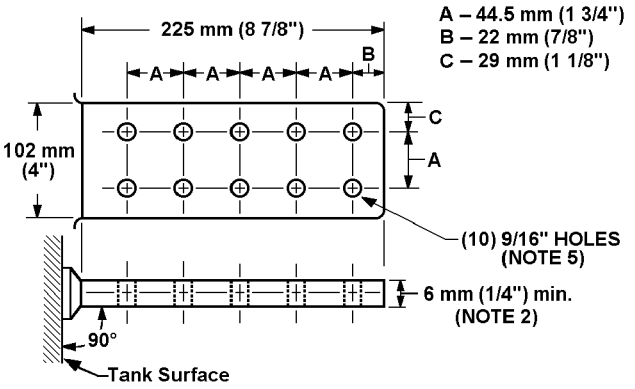

kVA ratings	Secondary ratings (volts)
750 - 1000	208Y/120
1000	240
2000 - 2500	480, 480Y/277

(c)

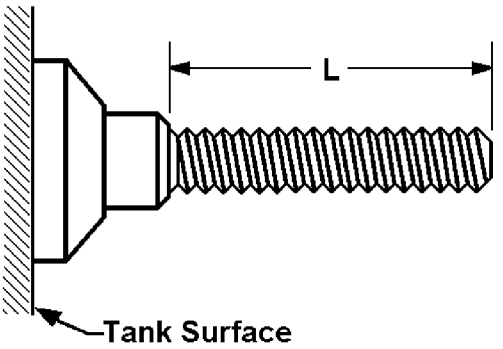

kVA	Voltage	Thread size (note 3)	Minimum L (note 3)
75 – 150	240, 208Y/120	5/8” – 11UNC-2A	32 mm (1.25”)
75 - 300	480, 480Y/277	5/8” – 11UNC-2A	32 mm (1.25”)
225 – 300	240, 208Y/120	1” – 14 UNS-2A	44 mm (1.75”)
500	480, 480Y/277	1” – 14 UNS-2A	44 mm (1.75”)
500	240, 208Y/120	1¼”– 12 UNF-2A	67 mm (2.62”)

(d)

NOTES
1. All dimensions are in mm unless otherwise specified.
2. Greater thickness may be required.
3. Larger thread size, length, or both may be required if materials other than copper are used.
4. Terminals a, b, and c are normally supplied; terminal d is supplied only when specified.
5. To be furnished with additional support, designed by the manufacturer, at the end furthest from the tank cover without interfering with the use of any of the ten holes.

Figure 4 – Secondary copper terminals (*continued*)

Copyright The Institute of Electrical and Electronics Engineers, Inc.
Provided by IHS under license with IEEE
No reproduction or networking permitted without license from IHS
Copyright © 2003 IEEE. All rights reserved.
Not for Resale

7.2.2 Neutral terminal connection

7.2.2.1 The primary neutral of wye-wye units shall be internally connected to the secondary neutral with provision for opening the connection for testing. The connection shall be accessible through a handhole.

7.2.2.2 A fully rated secondary neutral shall be either a blade welded directly to the tank opposite the internal boss, or a fully insulated bushing, if required by the user, in accordance with Figure 4. If a bushing is used, removable ground straps, sized for the short circuit rating of the transformer, shall be provided and connected between the neutral bushing and a ground pad, with two 1/2-13UNC tapped holes, welded to the top of the tank and located a minimum of 300mm (12 inches) from the bushing center.

7.3 Accessory equipment and marking requirements

7.3.1 Liquid-level marking

A suitable marking inside the tank shall indicate the correct liquid level at 25°C.

7.3.2 Lifting provisions

7.3.2.1 Safety factor

Lifting provisions shall be designed to provide a safety factor of five or more assuming a two-point lift. This safety factor is the ratio of the ultimate stress of the material used to the working stress. The working stress is the maximum combined stress developed in the lifting provisions by the static load of the completely assembled transformer.

7.3.2.2 Lifting lugs

Four lifting lugs shall be provided for lifting the transformer with four slings at a maximum angle of 30 degrees with respect to the vertical. The bearing surfaces of the lugs shall be free of sharp edges. Each lug shall have a hole for attaching a 40mm (1 1/2-inch) clevis and shall be located to result in a distributed balanced lift in a vertical direction.

7.3.3 Terminal marking

7.3.3.1 External terminal markings shall be as shown in Figure 2.

7.3.3.2 The identification of terminal connections shall be as shown on the nameplate.

7.3.3.3 The angular displacement shall be as shown in ANSI/IEEE C57.12.00.

7.3.4 Nameplate

7.3.4.1 The nameplate shall be securely attached to the top cover and shall be oriented with the transformer terminals.

7.3.4.2 The nameplate shall conform to the requirements of nameplate "C" as described in ANSI/IEEE C57.12.00.

Copyright The Institute of Electrical and Electronics Engineers, Inc.
Provided by IHS under license with IEEE
No reproduction or networking permitted without license from IHS

Copyright © 2003 IEEE. All rights reserved.
Not for Resale

7.3.5 Tap changer

A tap changer for de-energized operation shall be provided. Each tap-changer position and tap voltage shall be clearly identifiable by reference to nameplate information. All positions of the tap changer shall be operative positions.

The tap changer shall be designed with an operating means available under a 2-inch NPT plug, under suitable cover, or protruding through the cover. An indicator shall clearly show the tap position when the plug or cap is removed.

7.4 Tanks

7.4.1 General

The transformer tank shall be of sealed construction, consisting of a welded main cover equipped with a handhole cover and a subbase. The completely assembled tank shall be of sufficient strength to withstand a pressure of 50 kPa (7 psig) without permanent deformation and 105 kPa (15 psig) without rupture. The completely assembled transformer shall be tested for leaks at a minimum of 50 kPa (7 psig) measured above the static head of liquid for not less than six hours. Alternative methods for leak detection, such as the helium leak detector method, may be used.

7.4.2 Covers

The cover shall be welded in place.

7.4.3 Handholes

When a handhole is required, it shall be located on the cover and shall be of welded construction.

7.4.4 Ground provisions

7.4.4.1 A grounding pad or connecting points shall be provided near the primary bushings for grounding each cable shield.

7.4.4.2 The tank grounding provision shall consist of one of the following:

1. 500 kVA and below: An unpainted, copper-faced-steel or stainless-steel pad with a 1/2-inch-13-NC tapped hole, as shown in figure 4(a). The minimum thickness of the copper facing shall be 0.4 mm (0.015 inch). The minimum thread depth of the hole shall be 11 mm (7/16 inch).

2. Above 500 kVA: An unpainted, copper faced-steel or stainless-steel pad, 51mm (2 inch) x 89mm (3 1/2-inch), with two holes spaced on 44.5mm (1 3/4-inch) centers and tapped for 1/2-inch-13-NC thread, as shown in figure 4(b) & (c). The minimum thickness of the copper facing shall be 0.4mm (0.015 inch). The minimum threaded depth of holes shall be 12.7mm (1/2-inch).

3. All kVA sizes: A corrosion-resistant blade with four 9/16-inch holes spaced on 44.5mm (1-3/4-inch) centers, as shown in figure 4(a).

7.4.4.3 All threaded holes in steel shall be equipped with a non-corrosive bolt or plug to prevent rusting of the steel during storage.

7.4.5 Finish

The finish shall conform to ANSI C57.12.32, *Submersible Equipment Enclosure Integrity*.

--`,,`,,`-`-`,,`,,`,`,,`---

Copyright The Institute of Electrical and Electronics Engineers, Inc.
Provided by IHS under license with IEEE
No reproduction or networking permitted without license from IHS

Copyright © 2003 IEEE. All rights reserved.
Not for Resale

7.5 Audible sound levels

Transformers shall be designed so that the average sound level does not exceed the levels given in Table 5.

Table 5 – Audible sound levels

kVA rating	Average sound levels 35 kV and below (decibels)
75	51
112.5	55
150	55
225	55
300	55
500	56
750	57
1000	58
1500	60
2000	61
2500	62

Copyright The Institute of Electrical and Electronics Engineers, Inc.
Provided by IHS under license with IEEE
No reproduction or networking permitted without license from IHS

Copyright © 2003 IEEE. All rights reserved.
Not for Resale