# American National Standard for Transformers—Pad-Mounted, Compartmental-Type, Self-Cooled Three-Phase Distribution Transformers With High-Voltage Bushings, 2500 kVA and Smaller: High Voltage, 34 500 Grd Y/19 920 Volts and Below; Low Voltage, 480 Volts and Below

Approved July 1993

**American National Standards Institute, Inc.**

The Institute of Electrical and Electronics Engineers, Inc.
3 Park Avenue, New York, NY 10016-5997, USA

Copyright © 2003 by the Institute of Electrical and Electronics Engineers, Inc.
All rights reserved. Printed in the United States of America.

*Print:* ISBN 0-7381-3626-3 SH95109
*PDF:* ISBN 0-7381-3627-1 SS95109

*No part of this publication may be reproduced in any form, in an electronic retrieval system or otherwise, without the prior written permission of the publisher.*

Copyright The Institute of Electrical and Electronics Engineers, Inc.
Provided by IHS under license with IEEE
No reproduction or networking permitted without license from IHS Not for Resale

Copyright The Institute of Electrical and Electronics Engineers, Inc.
Provided by IHS under license with IEEE
No reproduction or networking permitted without license from IHS
Not for Resale

# American National Standard

Approval of an American National Standard requires verification by ANSI that the requirements for due process, consensus, and other criteria for approval have been met by the standards developer.

Consensus is established when, in the judgment of the ANSI Board of Standards Review, substantial agreement has been reached by directly and materially affected interests. Substantial agreement means much more than a simple majority, but not necessarily unanimity. Consensus requires that all views and objections be considered, and that a concerted effort be made toward their resolution.

The use of American National Standards is completely voluntary; their existence does not in any respect preclude anyone, whether he has approved the standards or not, from manufacturing, marketing, purchasing, or using products, processes, or procedures not conforming to the standards.

The American National Standards Institute does not develop standards and will in no circumstances give an interpretation of any American National Standard. Moreover, no person shall have the right or authority to issue an interpretation of an American National Standard in the name of the American National Standards Institute. Requests for interpretations shall be addressed to the secretariat or sponsor whose name appears on the title page of this standard.

**CAUTION NOTICE:** This American National Standard may be revised or withdrawn at any time. The procedures of the American National Standards Institute require that action be taken to reaffirm, revise, or withdraw this standard no later than five years from the date of approval. Purchasers of American National Standards may receive current information on all standards by calling or writing the American National Standards Institute.

--`,,`-`-`,,`,,`,`,,`---

Copyright The Institute of Electrical and Electronics Engineers, Inc.
Provided by IHS under license with IEEE
No reproduction or networking permitted without license from IHS

Not for Resale

Copyright The Institute of Electrical and Electronics Engineers, Inc.
Provided by IHS under license with IEEE
No reproduction or networking permitted without license from IHS
Not for Resale

## CONTENTS

**Page**


Foreword ..... iii
1 Scope ..... 1
2 Referenced American National Standards ..... 1
3 Ratings ..... 2
3.1 Kilovolt-ampere ratings ..... 2
3.2 Volt ratings and tap ratings ..... 2
4 Basic lightning impulse insulation levels and dielectric test levels ..... 2
5 Impedance voltage ..... 2
5.1 Percent impedance voltage ..... 2
5.2 Tolerance on impedance voltage ..... 2
5.3 Tolerance on impedance voltage on a tap ..... 3
6 Tests ..... 3
6.1 General ..... 3
6.2 Dielectric tests ..... 3
7 Construction ..... 3
7.1 General ..... 3
7.2 Bushings and terminals ..... 4
7.3 High-voltage and low-voltage compartments ..... 4
7.4 Instruction nameplate ..... 4
7.5 Oil preservation ..... 5
7.6 Tanks ..... 5
8 Storage and installation ..... 6
8.1 Storage ..... 6
8.2 Installation ..... 6
9 Other requirements that may be specified for some applications ..... 6




--`,,`-`-`,,`,,`,`,,`---
Copyright The Institute of Electrical and Electronics Engineers, Inc.
Provided by IHS under license with IEEE
No reproduction or networking permitted without license from IHS
Not for Resale

Copyright The Institute of Electrical and Electronics Engineers, Inc.
Provided by IHS under license with IEEE
No reproduction or networking permitted without license from IHS
Not for Resale

## Foreword (This Foreword is not part of American National Standard C57.12.22)

The Accredited Standards Committee on Transformers, Regulators, and Reactors, C57, has for many years been developing and correlating standards on transformers and regulators. The data used in this work have been gathered from many sources, including the standard of the Institute of Electrical and Electronics Engineers and the National Electrical Manufacturers Association, reports of committees of the Edison Electric Institute, and others.

This standard and the companion standard on single-phase transformers (ANSI C57.12.21) were prepared by the Subcommittee on Distribution Transformers, Overhead and Pad-mounted, C57.12.2.

Suggestions for improvement of this standard will be welcome. They should be sent to the American National Standards Institute, 1430 Broadway, New York, 10018.

This standard was processed and approved for submittal to ANSI by Accredited Standards Committee on Transformers, Regulators, and Reactors, C57. Committee approval of the standard does not necessarily imply that all committee members voted for its approval. At the time it approved this standard, the C57 Committee had the following members.

**P. Hopkinson, Chairman**
J. Thompson, Vice Chairman
J. A. Gauthier, Secretary

| *Organization Represented* | *Name of Representative* |
|---|---|
| Electric Light and Power | T. Diamantis<br>J. W. Howard<br>M. Mingoia (Alternate)<br>P. Orehek (Delegation Chairman)<br>S. Paiva<br>J. Sullivan<br>J. Thompson (Alternate) |
| Institute of Electrical and Electronic Engineers | J. Borst<br>J. Davis<br>J. H. Harlow<br>L. Savio (Delegation Chairman)<br>H. Smith (Alternate)<br>R. Veitch |
| National Electrical Manufacturers Association | P. Coulter<br>P. Dewever (Alternate)<br>J. Douglas (Alternate)<br>S. Endersbe<br>A. Ghafourian<br>P. Hopkinson (Delegation Chairman)<br>K. Linsley<br>R. Plaster (Alternate)<br>H. Robin (Alternate)<br>T. Reback |



Copyright The Institute of Electrical and Electronics Engineers, Inc.
Provided by IHS under license with IEEE
No reproduction or networking permitted without license from IHS
Not for Resale

| | |
|---|---|
| Underwriters Laboratories | W. O'Grady<br>R. Seelbach (Alt.) |
| U.S. Department of the Navy | H. Stickley |
| U.S. Department of Energy | K. Wolohan |
| U.S. Department of the Interior | R. Chadwick |
| U.S. D.A. REA | J. Bohlk |
| American National Standards Institute | C. Zegers |

Subcommittee C57.12.2, on Distribution Transformers, Overhead and Pad-Mounted which developed this standard, had the following members:

**K. Hanus, Chairman**

**Members:**

G. Andersen
J. Antweiler
J. Bishop
J. Corkran
T. Diamantis
D. Galloway
A. Ghafourian
G. Henry
R. Hollingsworth
J. Hunt
R. Jordan
J. Lazar
M. Mingoia
N. Mohesky
G. Paiva
C. Pearson
T. Pekarek
D. Rolling
E. Smith
R. Scheu
R. Stahara
A. Wilks



--`,,`-`-`,,`,,`,`,,`---

Copyright The Institute of Electrical and Electronics Engineers, Inc.
Provided by IHS under license with IEEE
No reproduction or networking permitted without license from IHS
Not for Resale

# Pad-Mounted, Compartmental-Type, Self Cooled Three Phase Distribution Transformers With High-Voltage Bushings, 2500 kVA and Smaller: High Voltage, 34 500 Grd Y/19 920 Volts and Below; Low Voltage, 480 Volts and Below

## 1 Scope

**1.1** This standard is intended for use as a basis for determining performance, interchangeability, and safety of the equipment covered, and to assist in the proper selection of such equipment.

**1.2** This standard covers certain electrical, dimensional, and mechanical characteristics and takes into consideration certain safety features of three-phase, 60 Hz., mineral-oil-immersed, self-cooled, pad-mounted, compartmental-type distribution transformers with high-voltage bushings. These transformers are rated 2500 kVA and smaller, with high voltages of 34 500 GrdY/19 920 volts and below, and with low voltages of 480 volts and below. These transformers are generally used for step-down purposes from an underground primary cable supply.

NOTE—Refer to latest federal regulations concerning PCB contamination in transformers.

**1.3** This standard covers the bushing and terminal arrangements for radial feed systems. Either certain minimum dimensions (see figures 1-3) or certain specific dimensions (see figures 4-6) shall be specified.

**1.4** This standard does not cover the electrical and mechanical requirements of any accessory devices that may be supplied with the transformer.

## 2 Referenced American National Standards

All characteristics, definitions, terminology, voltage designation, and tests, except as otherwise specified herein, shall be in accordance with the following American National Standards. When an American National Standard referred to in this document is superseded by a revision approved by the American National Standards Institute, Inc., the latest revision shall apply.

ANSI/IEEE C57.12.00-1993, *General Requirements for Liquid-Immersed Distribution, Power, and Regulating Transformers*

ANSI/C57.12.20-1989, *Requirements for Overhead-Type Distribution Transformers, 500 kVA and Smaller: High-Voltage, 34 500 Volts and Below; Low-Voltage, 7970/13 800Y Volts and Below*

ANSI C57.12.28-19XX, *Switchgear and Transformers—Pad-Mounted Equipment—Enclosure Integrity*

ANSI C57.12.70-1978, *Terminal Markings and Connections for Distribution and Power Transformers*

ANSI/IEEE C57.12.80-1978, *Terminology for Power and Distribution Transformers*

ANSI/IEEE C57.12.90-1993, *Test Code for Liquid-Immersed Distribution, Power, and Regulating Transformers and Guide for Short Circuit Testing of Distribution and Power Transformers*



Copyright The Institute of Electrical and Electr
Provided by IHS under license with IEEE
No reproduction or networking permitted witho

Copyright © 2003 IEEE. All rights reserved.

ANSI/IEEE C57.91-1979, *Guide for Loading Mineral Oil-Immersed Overhead and Pad-Mounted Distribution Transformers Rated 500 kVA and less with 65◦C or 55◦C Average Winding Rise*

ANSI/IEEE C57.92-1981, *Guide for Loading Mineral Oil-Immersed Power Transformers up to and including 100 MVA with 55◦C or 65◦C Average Winding Rise*

## 3 Ratings

### 3.1 Kilovolt-ampere ratings

Kilovolt-ampere ratings are continuous and based on not exceeding either a 65◦C average winding temperature rise or an 80◦C hot-spot conductor temperature rise. The temperature rise of the insulating oil shall not exceed 65◦C when measured near the top of the tank. These kilovolt-ampere ratings are based on the usual temperature and altitude service conditions specified in ANSI/IEEE C57.12.00. The kilovolt-ampere ratings shall be as follows:

| | |
|---|---|
| 75 | 750 |
| 112-1/2 | 1000 |
| 150 | 1500 |
| 225 | 2000 |
| 300 | 2500 |
| 500 | |

### 3.2 Voltage ratings and tap ratings

**3.2.1** Voltage ratings shall be in accordance with table 1.

**3.2.2** Voltage taps shall be as given in table 2. The tap changer handle, or the area next to the handle, in the terminating compartment shall be marked indicating suitability for de-energized operation only.

## 4 Basic lightning impulse insulation levels and dielectric test levels

**4.1** Basic lightning impulse insulation levels (BILs) shall be in accordance with tables 1 and 3.

**4.2** Dielectric test levels shall be in accordance with the distribution levels in table 4 of ANSI/IEEE C57.12.00.

## 5 Impedance voltage

### 5.1 Percent impedance voltage

The percent impedance voltage, as measured on the rated voltage connection, shall be as follows:

| kVA Rating | Percent impedance voltage |
|---|---|
| 75 | 1.00 – 5.00 |
| 112-1/2 – 300 | 1.20 – 6.00 |
| 500 | 1.50 – 7.00 |
| 750 – 2500 | 5.75 |

### 5.2 Tolerance on impedance voltage

The tolerance shall be as specified in 9.2 of ANSI/IEEE C57.12.00.

### 5.3 Tolerance on impedance voltage on a tap



Copyright The Institute of Electrical and Electr
Provided by IHS under license with IEEE
No reproduction or networking permitted witho

Copyright © 2003 IEEE. All rights reserved.

The percent departure of the tested impedance voltage on any tap from the tested impedance voltage at rated voltage shall not be greater than the total tap voltage range and shall be expressed as a percentage of the rated voltage.

## 6 Tests

### 6.1 General

Except as specified in 6.2, tests shall be performed as specified in ANSI/IEEE C57.12.00 and ANSI/IEEE C57.12.90.

### 6.2 Dielectric tests

For wye-wye connected units, the transformer primary is designed for solidly grounded application, and no applied voltage test is required on the high-voltage winding. Induced voltage tests shall be performed by applying between the terminals of each winding a voltage that will develop from the high-voltage line terminals to ground a voltage of 1000 volts plus 3.46 times the rated transformer winding voltage, but in no case shall the line-to-ground voltage developed exceed 40 000 volts for 125 kV BIL and 50 000 volts for 150 kV BIL. For this test, the neutral terminal shall be grounded. However, under conditions whereby the neutral terminal ground connection can be removed, both the applied voltage test and the induced voltage test as specified in ANSI/IEEE C57.12.00 may be performed.

## 7 Construction

### 7.1 General

A pad-mounted, compartmental-type transformer shall conform to ANSI C57.12.28 and consist of a tank with high-voltage and low-voltage cable terminating compartments, as shown in figure 2 or figure 5. The compartment shall be separated by a barrier of metal or other rigid material.

**7.1.1** The high-voltage and low-voltage compartments shall be located side-by-side on one side of the transformer tank. When viewed from the front, the low-voltage compartment shall be on the right.

**7.1.2** Each compartment shall have a door so constructed as to provide access to the high-voltage compartment only after the door to the low-voltage compartment has been opened. There shall be one or more additional captive fastening devices that must be disengaged before the high-voltage door can be opened. Where the low-voltage compartment door is of a flat panel design, the door shall have three-point latching with a handle provided for a locking device.

**7.1.3** The bottom edges of the compartments shall be so constructed as to provide for the use of hold-down devices accessible only from inside the compartments.

**7.1.4** The construction of the unit shall be such that it can be lifted, skidded, or slid, or any combination of these, into place on the mounting surface without disturbing the high-voltage or low-voltage cables.

**7.1.5** Jack bosses or jacking facilities shall be provided on the tank. The vertical clearance for a jack shall be 1-1/2 inches minimum, 6-1/2 inches maximum.

**7.1.6** The transformer shall be arranged for rolling in two directions; parallel to and at right angles to one side of the transformer.

**7.1.7** The lifting provisions shall be permanently attached and arranged on the tank to provide a distributed balanced lift in a vertical direction for the completely assembled transformer and shall be designed to provide a safety factor of 5. The safety factor of 5 is the ratio of the ultimate stress of the



Copyright The Institute of Electrical and Electr
Provided by IHS under license with IEEE
No reproduction or networking permitted witho

Copyright © 2003 IEEE. All rights reserved.

material used to the working stress. The working stress is the maximum combined stress developed in the lifting provisions by the static load of the completely assembled transformer.

### 7.2 Bushings and terminals

**7.2.1** The electrical characteristics of the completely assembled high-voltage bushings and low-voltage terminals shall be as shown in table 3.

**7.2.2** The number, location, and arrangement of the high-voltage bushings and low-voltage terminals shall be as shown in figures 1-3 or figures 4-6.

**7.2.3** High voltage bushings shall have tin plated copper alloy clamp-type connectors arranged for vertical take-off. The clamp connectors shall accommodate No. 6 AWG solid to 250 kcmil stranded conductors. All high-voltage bushings shall be field replaceable utilizing access provided or cover removal.

**7.2.4** When provided, the high-voltage neutral bushing may be two insulation classes below that for the phase bushings.

**7.2.5** The low-voltage phase and neutral terminals shall be in accordance with Figures 3(a), 3(b), 6(a) or 6(b) and arranged for vertical take-off. Terminal dimensions shall be as shown in Figures 7(a), 7(b), 7(c) or 7(d), as specified.

All low-voltage bushings shall be field replaceable utilizing access provided or cover removal.

**7.2.6** The low-voltage neutral shall be either a blade connected directly to the tank or a fully insulated terminal. If a fully insulated terminal is used, a ground pad shall be provided on the outer surface of the tank. One or more removable ground straps suitably sized for the short-circuit rating of the transformer as defined in ANSI/IEEE C57.12.00 shall be provided and connected between the low-voltage neutral terminal and the ground pad.

**7.2.7** For wye-wye connected units, the high-voltage neutral shall be connected to the low-voltage neutral internally with provision for opening this connection for testing.

**7.2.8** Bushing and terminal designations shall be as defined in ANSI C57.12.70, The high-voltage bushing and low-voltage terminal designations and locations are shown in figures 1-3 or figures 4-6.

The identification of the bushing and terminal connections shall be as shown on the instruction nameplate. The angular displacement shall be as shown in figure 8.

### 7.3 High-voltage and low-voltage compartments

The compartment doors shall be of sufficient size to provide adequate operating and working space when removed or open. The doors shall either be equipped for latching in the open position or designed for manual removal.

### 7.4 Instruction nameplate

**7.4.1** The instruction nameplate shall be located in the low-voltage compartment and shall be readable with the cables in place. When the nameplate is mounted on a removable part, the manufacturer's name and transformer serial number shall be permanently affixed to a nonremovable part.

**7.4.2** The nameplate information shall conform to ANSI/IEEE C57.12.00; nameplate A for 500 kVA and below; nameplate B for 750 kVA and above. The high-voltage BIL shall be included on the nameplate.

### 7.5 Oil preservation

**7.5.1** The transformer shall be of sealed-tank construction. Sealed-tank construction is that construction which seals the interior of the tank from the atmosphere and in which the gas volume plus the oil volume



Copyright The Institute of Electrical and Electr
Provided by IHS under license with IEEE
No reproduction or networking permitted witho

Copyright © 2003 IEEE. All rights reserved.

remains constant. The transformer shall remain effectively sealed for a top-oil temperature of -5◦C to +105◦C continuous and under operating conditions as described in ANSI/IEEE C57.91 and ANSI/IEEE C57.92.

**7.5.2** A replaceable valve shall be provided to relieve pressures that build up slowly in excess of normal operating pressures. These excess pressures may be due to overloads, high ambient temperatures, external secondary faults, and incipient faults in the low-voltage winding. When relieving these excess pressures, the valve shall emit only a negligible amount of oil. The valve shall be furnished in the low-voltage compartment on the tank wall above the 140◦C top oil level, by the manufacturer's calculation, and shall be located so as not to interfere with use of the low- voltage terminals or the operating handle of the low-voltage circuit breaker. The inlet port shall be 1/4 inch or larger NPT (or NF thread with gasket), sized for specified minimum flow rate. Exposed parts shall be of weather and corrosion-resistant materials. Gaskets and O-rings shall withstand oil vapor and a 105◦C temperature continuous under operating conditions as described in ANSI/IEEE C57.91 and ANSI/IEEE C57.92, without seizing or deteriorating, for the life of the transformer. The valve shall have a pull ring for manually reducing pressure to atmospheric using a standard hook-stick and shall be capable of withstanding a static pull force of 25 lb (11.34 kg) for one minute without permanent deformation. The valve shall withstand a static force of 100 lb (445 N) for one minute applied normal to its longitudinal axis at the outermost extremity of the body. When specified, the venting port, on the outward side of the valve head set, shall be protected to prevent entry of dust, moisture, and insects before and after the valve has actuated; or a weather-cap-type indicator shall be provided, which will remain attached to the valve and provide positive indication to an observer that the valve has operated. Venting and sealing characteristics shall be as follows:

—Cracking pressure: 10 psig $\pm$ 2 psig
—Resealing pressure: 6 psig minimum
—Zero leakage from resealing pressure to -8 psig
—Flow at 15 psig: 35 SCFM minimum (where SCFM is flow at cubic feet per minute corrected for air pressure of 14.7 psi and air temperature of 21.1◦C).

### 7.6 Tanks

**7.6.1** The tank shall be of sufficient strength to withstand a pressure of 7 psig without permanent distortion; and 15 psig without rupturing or affecting cabinet security as described in ANSI C57.12.28.

A 1-inch upper plug (or cap) for filling and pressure testing shall be provided. A 1-inch NPT drain valve with built-in sampling device shall be provided. Both the filling cap or plug and the drain valve shall be located within the low-voltage termination compartment. Suitable means for indicating the correct liquid level at 25◦C shall be provided.

**7.6.2** Where internal connections for test purposes or internal tap changer is required, access shall be provided.

**7.6.3** Tank ground provisions shall consist of the following pads:

(1) 500 kVA and below: two steel pads, each with a 1/2-13 UNC tapped hole, 7/16 inch deep.
(2) Above 500 kVA: two unpainted, copper-faced steel or stainless steel pads, 2 x 3-1/2 inches each with two holes spaced on 1-3/4 inch centers and tapped for 1/2-13 UNC thread. The minimum thickness of the copper facing shall be 0.015 inch. Minimum thread depth of holes shall be 1/2 inch.

These ground pads shall be welded on or near the transformer base, one in the high-voltage compartment and one in the low-voltage compartment. In cases where the transformer tank and compartment are separate, they shall be electrically bonded.

**7.6.4** Mounting provisions for surge arresters shall consist of six steel pads with 1/2-13 UNC tapped holes 7/16 inch deep, or 1/2-13 UNC studs, 1 inch long, located in the high-voltage compartment.



Copyright The Institute of Electrical and Electr
Provided by IHS under license with IEEE
No reproduction or networking permitted witho

Copyright © 2003 IEEE. All rights reserved.

# 8 Storage and installation

## 8.1 Storage

The transformer shall be stored in a vertical position and shall remain essentially in that position at all times, including transport to the site and during installations.

## 8.2 Installation

Equipment manufactured to this specification may be installed in areas where environmental and climatic conditions make operation at varying angles of tilt from the horizontal an important consideration. Under these circumstances, the users may wish to make a particular "angle of tilt" part of their specifications.

# 9 Other requirements that may be specified for some applications

Certain specific applications call for transformer requirements not covered in Section 3 through 8. They shall be met only when specified in conjunction with the requirements of Section 3 through 8. These specific requirements may change the dimensions in figures 5, 6, and 7. They are not included in this standard in order to avoid the implication of great or lesser availability by listing some and omitting others.

**Table 1 – Range of kVA and voltage ratings**

| High-Voltage Rating (volts) | Minimum BIL (kV) | kVA Rating | |
|---|---|---|---|
| | | Low-Voltage Rating 208 Y/120, 240 (volts) | Low-Voltage Rating 480 Y/277, 480 (volts) |
| **Delta or wye:** | | | |
| 2 400 | 45 | 75- 750 | 75- 750 |
| 4 160 | 60 | 75-1000 | 75-1000 |
| 4 800 | 60 | 75-1000 | 75-1500 |
| 7 200 | 75 | 75-1000 | 75-2000 |
| 12 000 | 95 | 75-1000 | 75-2500 |
| 12 470 | 95 | 75-1000 | 75-2500 |
| 13 200 | 95 | 75-1000 | 75-2500 |
| 13 800 | 95 | 75-1000 | 75-2500 |
| 16 340 | 95 | 75-1000 | 75-2500 |
| **Grounded wye:** | | | |
| 22 860Grd Y/13 200 | 125 | 75-1000 | 75-2500 |
| 23 900Grd Y/13 800 | 125 | 75-1000 | 75-2500 |
| 24 940Grd Y/14 400 | 125 | 75-1000 | 75-2500 |
| 34 500Grd Y/19 920 (Note 3) | 150 | 75-1000 | 75-2500 |

NOTES
1 Kilovolt-ampere ratings separated by a dash indicate that all intervening ratings covered in this standard are included.
2 Unsymmetrical excitation or loading of Y-Y connected units may cause heating of their tanks in excess of that which would be produced by balanced conditions. To reduce the probability of tank heating, such units shall be provided with a core construction that will not saturate when 33% zero-sequence voltage is applied.
3 When specifying 125 kV BIL, adequate grounding and surge protection studies should be made.

**Table 2 – High voltage taps**

| High-Voltage Rating (volts) | High-Voltage Taps | | | |
|---|---|---|---|---|
| | 75–500 kVA | | | 750–2500 kVA |
| | Low-Voltage Rating 208 Y/120 (volts) | Low-Voltage Rating 240, 480 Y/277, 480 (volts) | | Low-Voltage Rating 208 Y/120, 240 480 Y/277, 480 (volts) |
| | Below | Above | Below | |
| 2 400 | 4–2-1/2% | 2–2-1/2% | 2–2-1/2% | 2 520/2 460/2 340/2 280 |
| 4 160 | 4–2-1/2% | 2–2-1/2% | 2–2-1/2% | 4 370/4 265/4 055/3 950 |
| 4 800 | 4–2-1/2% | 2–2-1/2% | 2–2-1/2% | 5 040/4 920/4 680/4 560 |
| 7 200 | 4–2-1/2% | 2–2-1/2% | 2–2-1/2% | 7 560/7 380/7 020/6 840 |



Copyright The Institute of Electrical and Electr
Provided by IHS under license with IEEE
No reproduction or networking permitted witho

Copyright © 2003 IEEE. All rights reserved.

| | | | | |
|---|---|---|---|---|
| 12 000 | 4–2-1/2% | 2–2-1/2% | 2–2-1/2% | 12 600/12 300/11 700/11 400 |
| 12 470 | 4–2-1/2% | 2–2-1/2% | 2–2-1/2% | 13 090/12 780/12 160/11 850 |
| 13 200 | 4–2-1/2% | 2–2-1/2% | 2–2-1/2% | 13 860/13 530/12 870/12 540 |
| 13 800 | 4–2-1/2% | * | * | 14 400/14 100/13 500/13 200 |
| 16 340 | * | * | * | 17 200/16 770/15 910/15 480 |
| | | | | |
| 22 860Grd Y/13 200 | 4–2-1/2% | 2–2-1/2% | 2–2-1/2% | 24 010/23 430/22 290/21 720 |
| 23 900Grd Y/13 800 | 4–2-1/2% | 2–2-1/2% | 2–2-1/2% | 25 100/24 500/23 300/22 710 |
| 24 940Grd Y/14 400 | 4–2-1/2% | 2–2-1/2% | 2–2-1/2% | 26 190/25 570/24 320/23 690 |
| 34 500Grd Y/19 920 | 4–2-1/2% | 2–2-1/2% | 2–2-1/2% | 36 230/35 370/33 640/32 780 |

* Same taps as for 750–2500 kVA ratings (see last column).

**Table 3 – Electrical Characteristics and Minimum Electrical Clearances of High-Voltage Bushings and Low-Voltage Terminals**

| Transformer Voltage (volts) | BIL (kV) | 60-Hz Dry-One-Minute Withstand (kV) | Minimum Clearance Live Parts to Ground* (inches) | Minimum Clearance Live Parts Phase to Phase* (inches) |
|---|---|---|---|---|
| 208 Y/120, 240, 480 Y/277, 480 | 30 | 10 | 1 | 1 |
| 2 400 | 45 | 15 | 2 | 2 |
| 4 160 to 4 800 | 60 | 21 | 2-1/2 | 2-1/2 |
| 7 200 | 75 | 27 | 3-1/2† | 4 |
| 12 000 to 16 340 | 95 | 35 | 5† | 5-1/2 |
| 22 860Grd Y to 24 940Grd Y | 125 | 42 | 5-3/4† | 6-1/4† |
| 34 500Grd Y | 150 | 70 | 8† | 9† |

* These dimensions should be increased wherever possible to allow for ease in making connections by the user.

† Where clearances are less than those shown, an adequate nonhygroscopic insulating barrier shall be provided, but in no case shall the dimension between live parts and the barrier be less than three inches at 125 kV BIL or smaller and four inches at 150 kV BIL. The use of barriers shall not reduce the above electrical characteristics.



Copyright The Institute of Electrical and Electr
Provided by IHS under license with IEEE
No reproduction or networking permitted witho

Copyright © 2003 IEEE. All rights reserved.

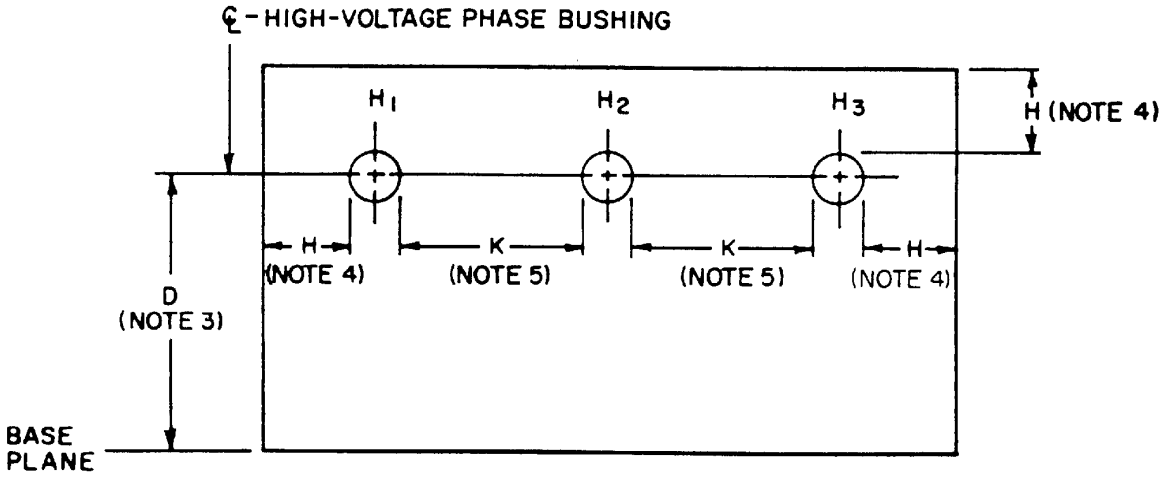


NOTES
1 High-voltage bushing arrangements and dimensions for applications requiring minimum dimensions are provided.
2 All dimensions are in inches and are minimum.
3 D is as specified in Figure 2.
4 H designated as live part to ground is as specified in Table 3.
5 K designated as live parts phase to phase is as specified in Table 3.
6 When barriers are applied, refer to Table 3.

**Figure 1 – Minimum dimensions for radial-feed transformers**



Copyright The Institute of Electrical and Electr
Provided by IHS under license with IEEE
No reproduction or networking permitted witho

Copyright © 2003 IEEE. All rights reserved.

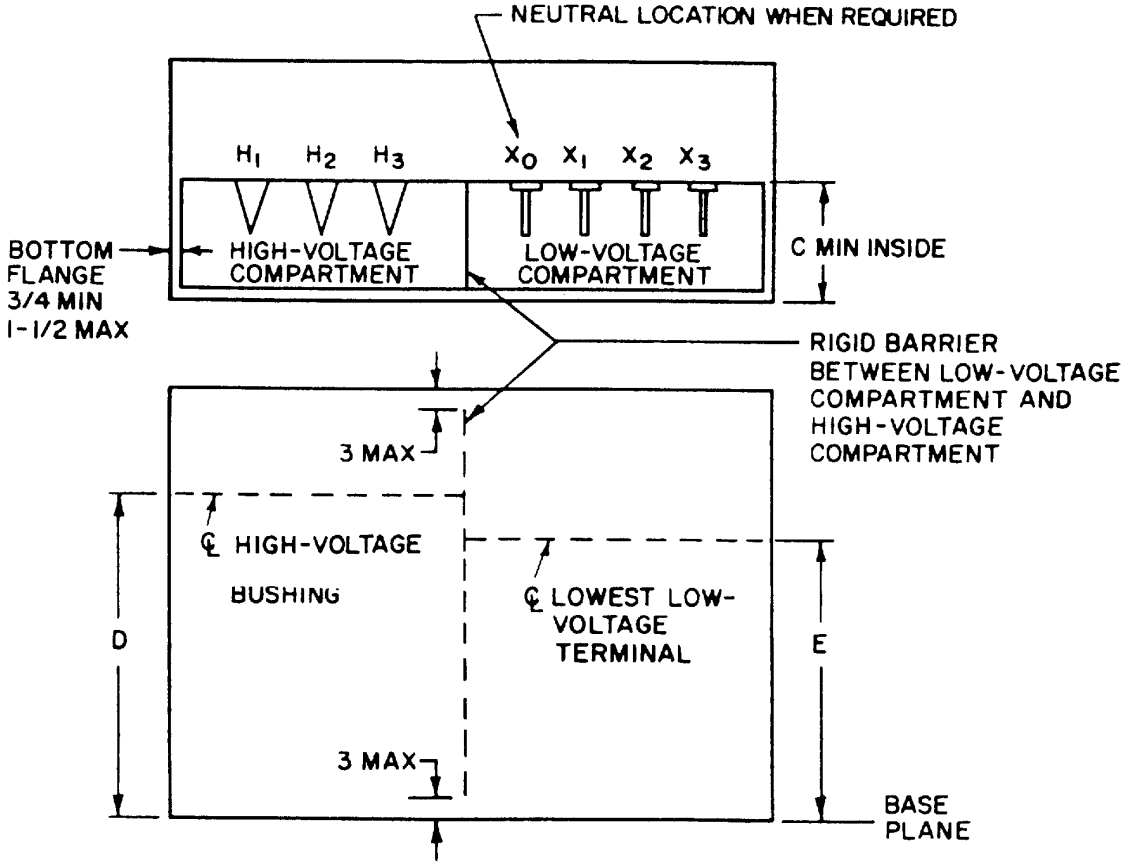


| kVA Ratings | Low-Voltage Rating (volts) | C BIL (kV) | | | D BIL (kV) | | | E |
|---|---|---|---|---|---|---|---|---|
| | | 95 and less | 125 | 150 | 95 and less | 125 | 150 | |
| 75–500 | All | 16 | 18 | 19 | 24 | 24 | 24 | 20 |
| 750–1000 | 240, 208 Y/120 | 16 | 18 | 21 | 36 | 36 | 36 | 27 |
| 750–2500 | 480, 480 Y/277 | 16 | 18 | 21 | 36 | 36 | 36 | 27 |

NOTES
1 High-voltage bushing and low-voltage terminal arrangements and dimensions for applications requiring certain minimum dimensions are provided.
2 All dimensions are in inches and are minimum unless otherwise indicated.
3 The BIL level is shown. For transformer high-voltage ratings included, refer to Table 1.

**Figure 2 – Compartment designations and minimum dimensions for radial-feed transformers**



Copyright The Institute of Electrical and Electr
Provided by IHS under license with IEEE
No reproduction or networking permitted witho

Copyright © 2003 IEEE. All rights reserved.

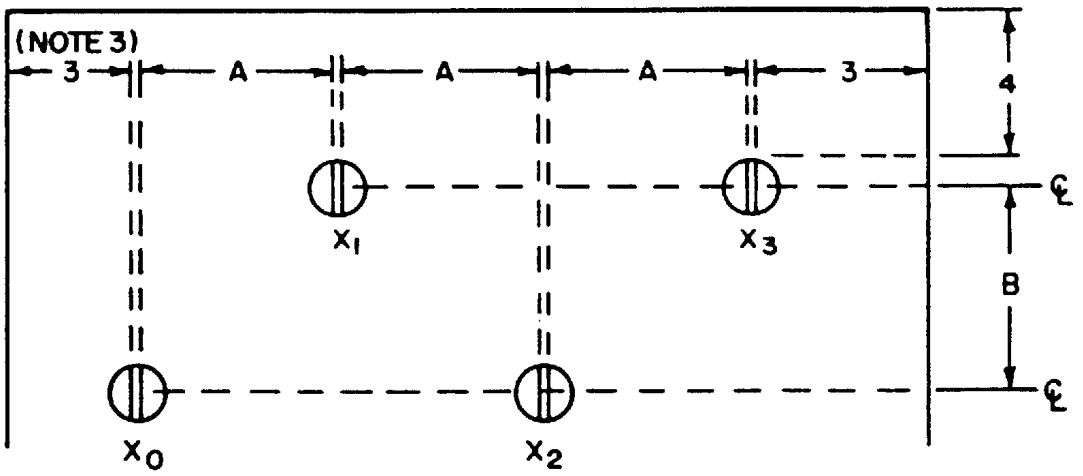


| kVA Rating | A | B |
|---|---|---|
| 75–150 | 3 | 6 |
| 225–500 | 4 | 8 |
| 750–2500 | 5 | 8 |

*(a) Staggered Low-Voltage Terminal Arrangement*

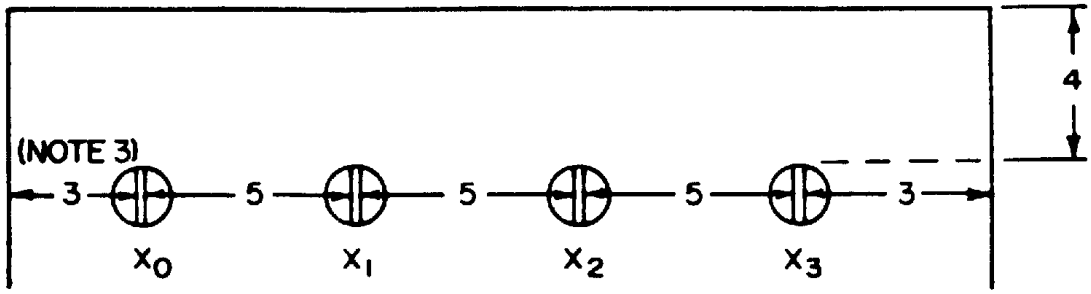


*(b) In-Line Low-Voltage Terminal Arrangement*

NOTES
1 Low-voltage terminal arrangements and dimensions for applications requiring certain minimum dimensions are provided.
2 All dimensions are in inches and are minimum.
3 This is the dimension to the rigid barrier between the high-voltage compartment and the low-voltage compartment.

**Figure 3 – Low-voltage terminal arrangements and minimum dimensions**



Copyright The Institute of Electrical and Electr
Provided by IHS under license with IEEE
No reproduction or networking permitted witho

Copyright © 2003 IEEE. All rights reserved.

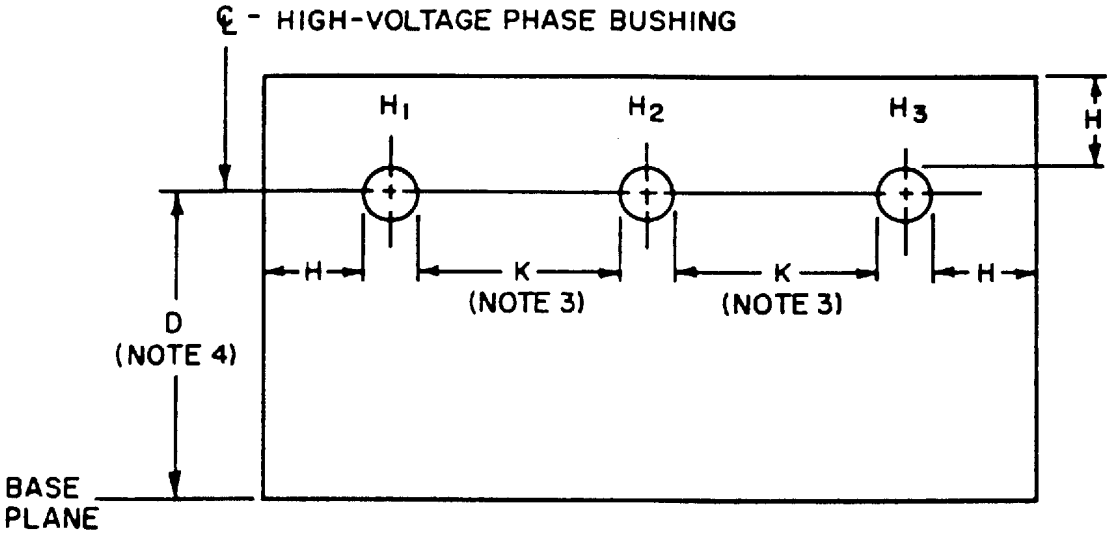


| BIL (kV) | H (Minimum Clearance, Live Parts to Ground) | K (Live Part Clearance, Phase to Phase) |
|---|---|---|
| 95 and below | 5.5 | 6.5 |
| 125 | 6 | 7 |
| 150 | 8 | 9 |

NOTES
1 High-voltage bushing arrangements and dimensions for applications requiring certain specific dimensions are provided.
2 All dimensions are in inches.
3 The tolerance of K is +1.00 inch, -0.00 inch.
4 D is as specified in Figure 5.
5 The BIL level is shown. For transformer high-voltage ratings included, refer to Table 1.

**Figure 4 – Specific dimensions for radial-feed transformers**



Copyright The Institute of Electrical and Electr
Provided by IHS under license with IEEE
No reproduction or networking permitted witho

Copyright © 2003 IEEE. All rights reserved.

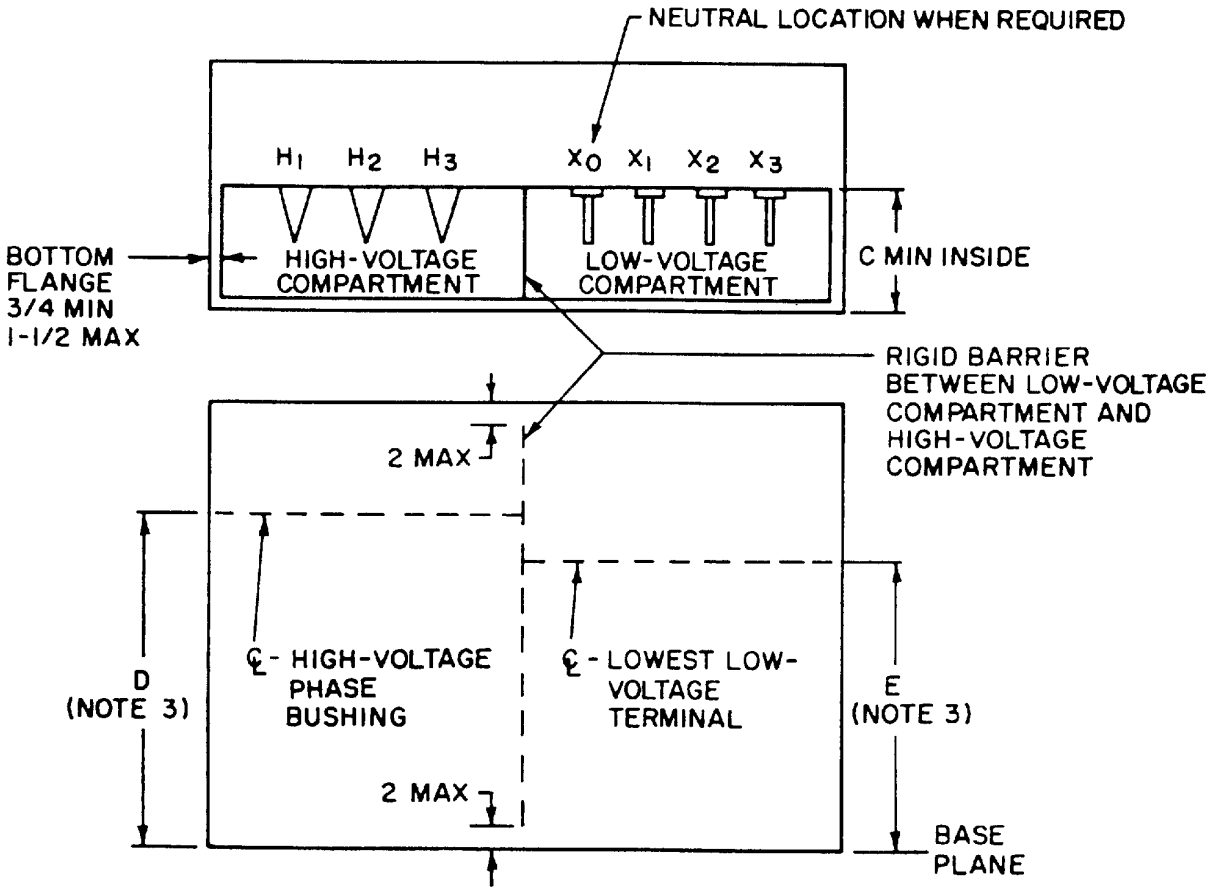


| kVA Rating | C BIL (kV) 95 and Less | C BIL (kV) 125 | C BIL (kV) 150 | D BIL (kV) 95 and Less | D BIL (kV) 125 | D BIL (kV) 150 | E |
|---|---|---|---|---|---|---|---|
| 75–150 | 18 | 24 | 24 | 30 | 30 | 42 | 27 |
| 225–500 | 18 | 24 | 24 | 36 | 36 | 48 | 31 |
| 750–2500 | 18 | 24 | 24 | 50 | 50 | 54 | 46 |

NOTES
1 High-voltage bushing and low-voltage terminal arrangements and dimensions for applications requiring certain specific dimensions are provided.
2 All dimensions are in inches unless otherwise specified.
3 The tolerance on D and E is ± 0.25 inch.
4 The BIL level is shown. For transformer high-voltage ratings included, refer to Table 1.

**Figure 5 – Compartment designations and specific dimensions for radial-feed transformers**



Copyright The Institute of Electrical and Electr
Provided by IHS under license with IEEE
No reproduction or networking permitted witho

Copyright © 2003 IEEE. All rights reserved.

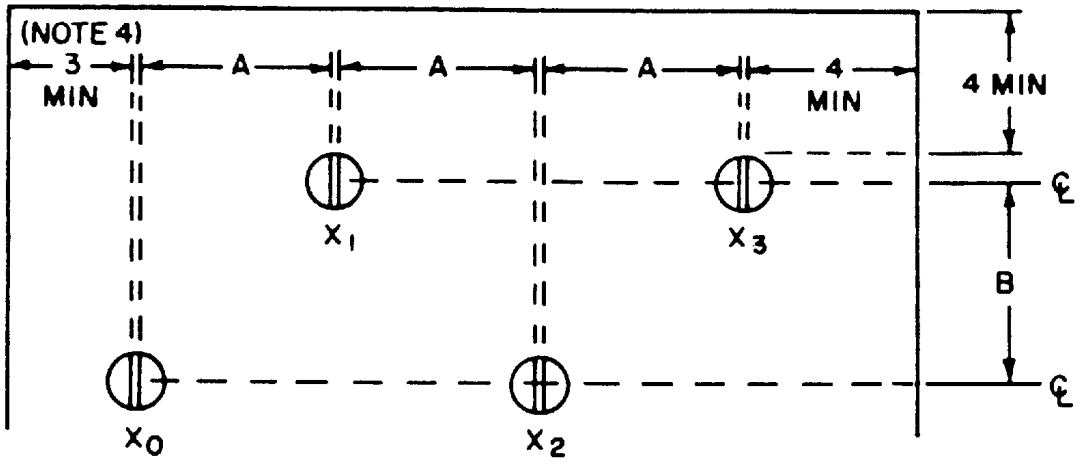


| kVA Rating | A | B |
|---|---|---|
| 75–150 | 5 | 6 |
| 225–2500 | 6 | 8 |

*(a) Staggered Low-Voltage Terminal Arrangement*

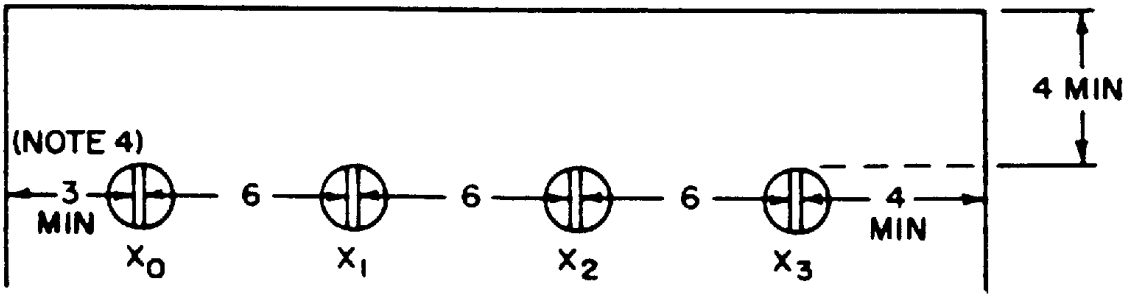


*(b) In-Line Low-Voltage Terminal Arrangement*

NOTES
1 Low-voltage terminal arrangements and dimensions for applications requiring certain specific dimensions are provided.
2 All dimensions are in inches.
3 The tolerance of all dimensions is ± 0.25 inch unless otherwise specified.
4 This is the dimension to the rigid barrier between the high-voltage compartment and the low-voltage compartment.

**Figure 6 – Low-voltage terminal arrangements and specific dimensions**



Copyright The Institute of Electrical and Electr
Provided by IHS under license with IEEE
No reproduction or networking permitted witho

Copyright © 2003 IEEE. All rights reserved.

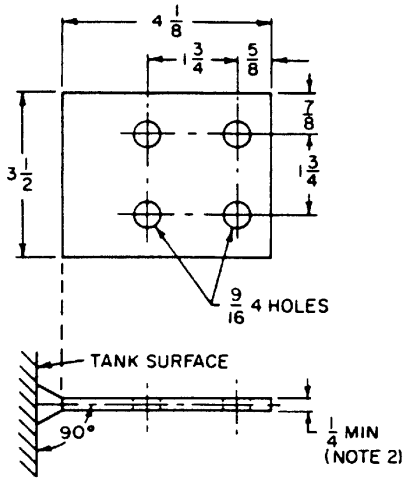


| kVA Rating | Low-Voltage Rating (volts) |
|---|---|
| 75–300 | 208Y/120 |
| 75–500 | 240 |
| 75–500 | 480, 480Y/277 |

*(a)*

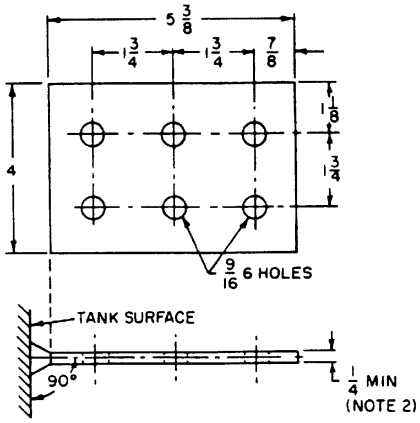


| kVA Rating | Low-Voltage Rating (volts) |
|---|---|
| 500 | 208Y/120 |
| 750 | 240 |
| 750–1500 | 480, 480Y/277 |

*(b)*

**Figure 7 – Low-voltage terminals**



Copyright The Institute of Electrical and Electr
Provided by IHS under license with IEEE
No reproduction or networking permitted witho

Copyright © 2003 IEEE. All rights reserved.

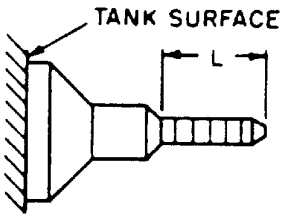


| kVA Rating | Low-Voltage Rating (volts) | Thread Size (Note 3) | Minimum L (Note 3) |
|---|---|---|---|
| 75–150 | 240, 208Y/120 | 5/8-11 UNC-2A | 1.25 |
| 75–300 | 480, 480Y/277 | 5/8-11 UNC-2A | 1.25 |
| 225–300 | 240, 208Y/120 | 1-14 UNS-2A | 1.75 |
| 500 | 480, 480Y/277 | 1-14 UNS-2A | 1.75 |
| 500 | 240, 208Y/120 | 1-1/4-12 UNF-2A | 2.62 |

*(c)*

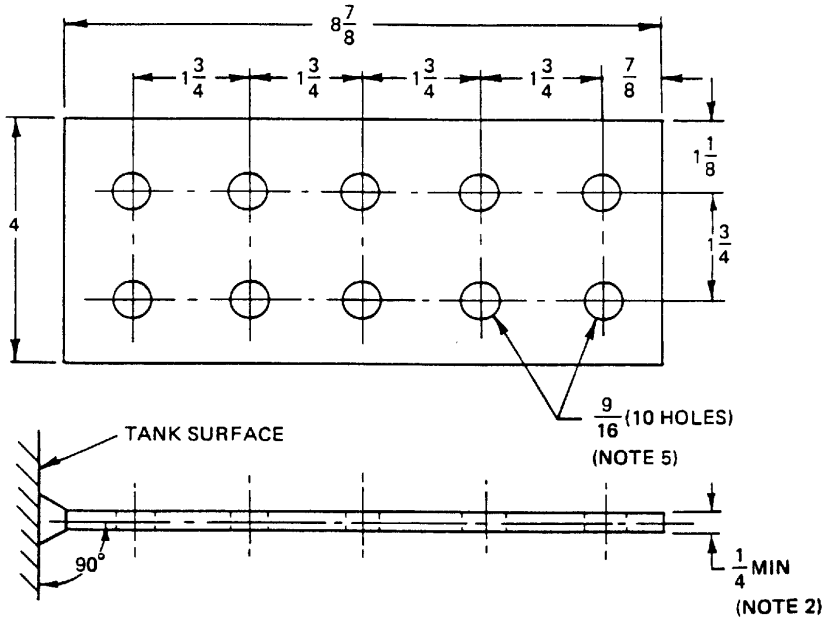


| kVA Rating | Low-Voltage Rating (volts) |
|---|---|
| 750–1000 | 208Y/120 |
| 1000 | 240 |
| 2000–2500 | 480, 480Y/277 |

*(d)*

NOTES
1 All dimensions are in inches, unless otherwise specified.
2 Greater thickness may be required to provide adequate conductivity.
3 Larger thread size or length, or both, may be required if materials other than copper are used.
4 Terminals a, b, and d are normally supplied; terminal c is supplied only when specified.
5 To be furnished with additional support, design by manufacturer, at the end furthest the tank wall without interfering with the use of any of the ten holes.
6 Corners and edges may be rounded for Figures 7a, 7,b, and 7d.

**Figure 7 *(continued)* – Low-voltage terminals**



--`,,`--`,,`,,`,`,,`---
Copyright The Institute of Electrical and Electr
Provided by IHS under license with IEEE
No reproduction or networking permitted witho
Copyright © 2003 IEEE. All rights reserved.

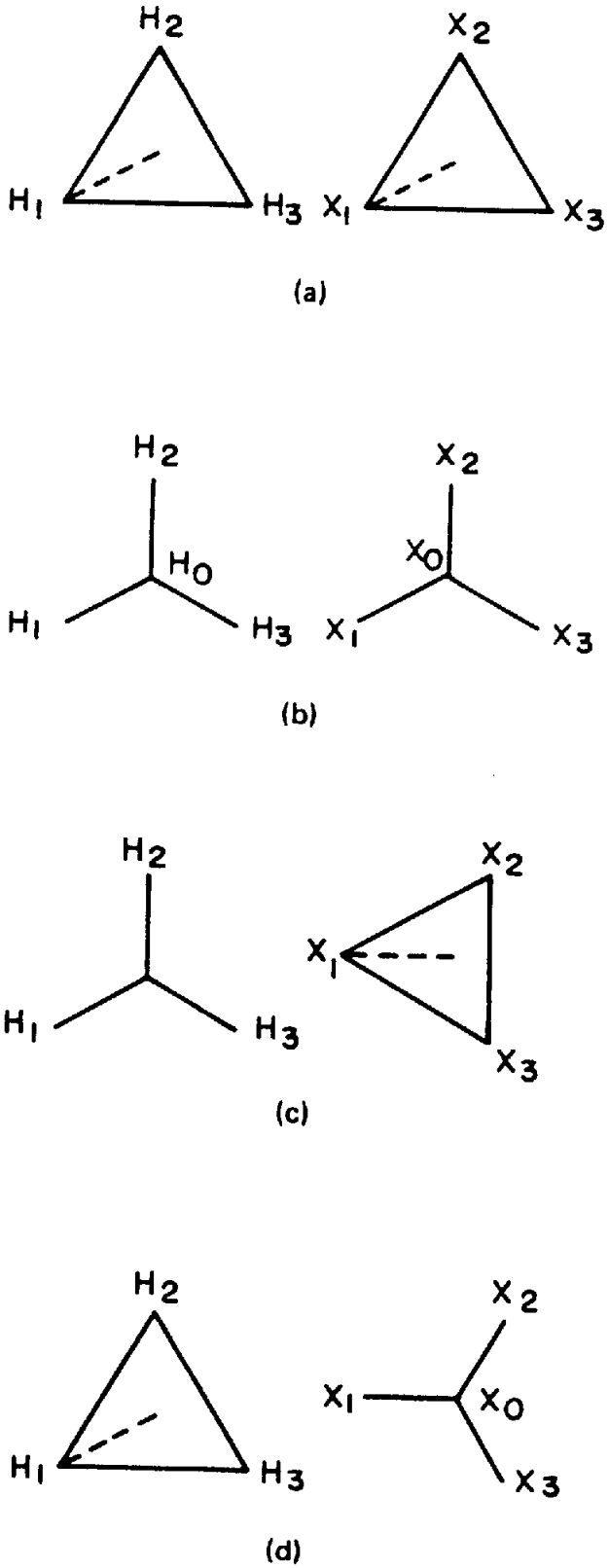


**Figure 8 – Angular displacement**



Copyright The Institute of Electrical and Electr
Provided by IHS under license with IEEE
No reproduction or networking permitted witho

Copyright © 2003 IEEE. All rights reserved.