American National Standard Requirements for Pad-Mounted, Compartmental-Type Self-Cooled, Single-Phase Distribution Transformers With High Voltage Bushings; High-Voltage, 34500 GRYD/19920 Volts and Below; Low-Voltage, 240/120 Volts; 167 kVA and Smaller

Approved 5/7/92

American National Standards Institute, Inc.

The Institute of Electrical and Electronics Engineers, Inc.
3 Park Avenue, New York, NY 10016-5997, USA

Copyright © 2003 by the Institute of Electrical and Electronics Engineers, Inc.
All rights reserved. Printed in the United States of America.

Print: ISBN 0-7381-3624-7 SH95108
PDF: ISBN 0-7381-3625-5 SS95108

No part of this publication may be reproduced in any form, in an electronic retrieval system or otherwise, without the prior written permission of the publisher.

Copyright The Institute of Electrical and Electronics Engineers, Inc.
Provided by IHS under license with IEEE
No reproduction or networking permitted without license from IHS

Copyright © 2003 IEEE. All rights reserved.

Copyright The Institute of Electrical and Electronics Engineers, Inc.
Provided by IHS under license with IEEE
No reproduction or networking permitted without license from IHS

Copyright © 2003 IEEE. All rights reserved.

American National Standard

Approval of an American National Standard requires verification by ANSI that the requirements for due process, consensus, and other criteria for approval have been met by the standards developer.

Consensus is established when, in the judgment of the ANSI Board of Standards Review, substantial agreement has been reached by directly and materially affected interests. Substantial agreement means much more than a simple majority, but not necessarily unanimity. Consensus requires that all views and objections be considered, and that a concerted effort be made toward their resolution.

The use of American National Standards is completely voluntary; their existence does not in any respect preclude anyone, whether he has approved the standards or not, from manufacturing, marketing, purchasing, or using products, processes, or procedures not conforming to the standards.

The American National Standards Institute does not develop standards and will in no circumstances give an interpretation of any American National Standard. Moreover, no person shall have the right or authority to issue an interpretation of an American National Standard in the name of the American National Standards Institute. Requests for interpretations shall be addressed to the secretariat or sponsor whose name appears on the title page of this standard.

CAUTION NOTICE: This American National Standard may be revised or withdrawn at any time. The procedures of the American National Standards Institute require that action be taken to reaffirm, revise, or withdraw this standard no later than five years from the date of approval. Purchasers of American National Standards may receive current information on all standards by calling or writing the American National Standards Institute.

Copyright The Institute of Electrical and Electronics Engineers, Inc.
Provided by IHS under license with IEEE
No reproduction or networking permitted without license from IHS

Copyright © 2003 IEEE. All rights reserved.

Copyright The Institute of Electrical and Electronics Engineers, Inc.
Provided by IHS under license with IEEE
No reproduction or networking permitted without license from IHS

Copyright © 2003 IEEE. All rights reserved.

CONTENTS

Page

Foreword iv
1 Scope 1

2 References 1
2.1 General 1

3 Ratings 2
3.1 Kilovolt-ampere ratings 2
3.2 Voltage ratings and tap ratings 2

4 Basic lightning impulse insulation levels and dielectric test levels 3

5 Tests 3
5.1 General 3
5.2 Dielectric tests 3

6 Construction 3
6.1 General 3
6.2 Bushings and terminals 4
6.3 High-voltage and low-voltage compartments 4
6.4 Instruction nameplate 5
6.5 Oil preservation 5
6.6 Tanks 5

7 Storage and installation 6
7.1 Storage 6
7.2 Installation 6

8 Other requirements that may be specified for some applications 6

Copyright The Institute of Electrical and Electronics Engineers, Inc.
Provided by IHS under license with IEEE
No reproduction or networking permitted without license from IHS

Copyright © 2003 IEEE. All rights reserved.

Foreword (This Foreword is not part of American National Standard C57.12.21-1992)

The Accredited Standards Committee on Transformers, Regulators, and Reactors, C57, has for a number of years been developing and correlating standards on transformers and regulators. The data used in this work have been gathered from many sources, including the standards of the Institute of Electrical and Electronics Engineers and the National Electrical Manufacturers Association, reports of committees of the Edison Electric Institute, and others.

This standard was prepared by the Working Group of the Subcommittee on Distribution Transformers, Overhead and Pad-Mounted, C57.12.2, and is a revision of the 1986 edition. Added to this revision are sections on storage and installation with emphasis being placed on the actual position when stored and the consideration of the angle of tilt when installed.

At the time of approval, the Working Group members were as follows:

Gerald A. Paiva, *Chair*

A. Ghafourian	M. Mingoia	R. Stahara
K. Hanus	D. Peters	J. Valdes
J. Malloy	R. Scheu	D. Whitley

This standard was processed and approved for submittal to ANSI by Accredited Standards Committee on Transformers, Regulators, and Reactors, C57. Committee approval of the standard does not necessarily imply that all committee members voted for its approval. At the time it approved this standard, the C57 Committee had the following members:

Chairman: P. J. Hopkinson, NEMA Delegation
Vice Chairman: J. C. Thompson, EL&P Delegation
Secretary: John A. Gauthier, NEMA

Organization	*Committee Member*
U.S. Dept. of Energy, Western Area Power Admin.	Kenneth C. Wolohon
Dept. of the Navy, Civil Engineer Corps.	Howard Stickley
Dept. of the Interior, Bureau of Reclamation	R. Chadwick
Department of Agriculture, R.E.A.	J. Bohlk
Tennessee Valley Authority	F. Lewis
Underwriters Laboratories, Inc.	W. O'Grady

Copyright The Institute of Electrical and Electronics Engineers, Inc.
Provided by IHS under license with IEEE
No reproduction or networking permitted without license from IHS

Copyright © 2003 IEEE. All rights reserved.

Electric Light & Power Company (EL&P)	P. E. Orehek, Chairman of Delegation T. Diamantis J. W. Howard M. Mingoia (Alternate) G. Paiva J. Sullivan J. Thompson
Institute of Electrical and Electronics Engineers (IEEE)	L. Savio, Chairman of Delegation J. D. Borst J. Davis J. H. Harlow H. Smith (Alternate) R. A. Veitch
National Electrical Manufacturers Association (NEMA)	G. D. Coulter P. Dewever (Alternate) S. Douglas P. J. Hopkinson (Alternate) K. R. Linsley J. J. Nay (Alternate) A. Ghafourian R. Plaster Harral Robin Susan Endersbe

Copyright The Institute of Electrical and Electronics Engineers, Inc.
Provided by IHS under license with IEEE
No reproduction or networking permitted without license from IHS

Copyright © 2003 IEEE. All rights reserved.

Copyright The Institute of Electrical and Electronics Engineers, Inc.
Provided by IHS under license with IEEE
No reproduction or networking permitted without license from IHS

Copyright © 2003 IEEE. All rights reserved.

Requirements for Pad-Mounted, Compartmental-Type Self-Cooled, Single-Phase Distribution Transformers with High Voltage Bushings; High-Voltage, 34500 GRDY/19920 Volts and Below; Low-Voltage, 240/120 Volts; 167 kVA and Smaller

1 Scope

This standard is intended for use as a basis for determining performance, interchangeability, and safety of the equipment covered, and to assist in the proper selection of such equipment.

1.2 This standard covers certain electrical, dimensional, and mechanical characteristics and takes into consideration certain safety features of single-phase, 60 Hz, mineral-oil-immersed, self-cooled, pad-mounted, compartmental-type distribution transformers with high-voltage bushings. These transformers are rated 167 kVA and smaller, with high-voltages of 34500 GRD/19900 volts and below for operation between one phase and grounded neutral, and low-voltage of 240/120 volts. These transformers are generally used for step-down purposes from an underground primary cable supply.

NOTE—Refer to latest federal regulations concerning polychlorinated biphenyl (PCB) contaminations in transformers.

1.3 This standard covers bushing and terminal arrangements for both radial and loop feed systems.

1.4 This standard does not cover the electrical and mechanical requirements of any accessory devices that may be supplied with the transformer.

2 References

2.1 General

All characteristics, definitions, terminology, voltage designations, and tests, except as otherwise specified herein, shall be in accordance with the following American National Standards (see 2.2):

ANSI C57.12.00-1987, *American National Standard Requirements for Overhead-Type Distribution Transformers, 500 kVA and Smaller; High-Voltage, 34,500 Volts and Below; Low Voltage, 7970/13800 Y Volts and Below.*

ANSI C57.12.20-1988, American National Standard Requirements for Overhead-Type Distribution Transformers, 500 kVA and Smaller; High-Voltage, 34,500 Volts and Below; Low-Voltage, 7970/13800 Y Volts and Below.

ANSI C57.12.28-1988, *American National Standard for Switchgear and Transformers—Pad-Mounted Equipment—Enclosure Integrity*.

ANSI C57.12.70-1978 (Reaff. 1987), *American National Standard Terminal Markings and Connections for Distribution and Power Transformers.*

ANSI C57.12.80-1978, *American National Standard Terminology for Power and Distribution Transformers.*

ANSI C57.12.90-1987, *American National Standard Test Code for Liquid-Immersed Distribution, Power, and Regulating Transformers and Guide for Short-Circuit Testing of Distribution and Power Transformers.*

Copyright The Institute of Electrical and Electronics Engineers, Inc.
Provided by IHS under license with IEEE
No reproduction or networking permitted without license from IHS

Copyright © 2003 IEEE. All rights reserved.

ANSI/IEEE C57.12.91-1981, *American National Standard Guide for Loading Mineral-Oil-Immersed Overhead and Pad-Mounted Distribution Transformers Rated 500 kVA and Below with 65°C or 55°C Average Winding Rise*.

2.2 Revision of American National Standards referred to in this document. When an American National Standard referred to in this document is superseded by a revision approved by the American National Standards Institute, Inc., the latest revision shall apply.

3 Ratings

3.1 Kilovolt-ampere ratings

Kilovoltampere ratings shall be continuous and based on not exceeding either a 65°C average winding temperature rise or an 80°C hotspot conductor temperature rise. The temperature rise of the insulating oil shall not exceed 65°C when measured near the top of the tank. These kilovolt-ampere ratings are based on the usual temperature and altitude service conditions specified in ANSI/IEEE C57.12.00.

The kilovolt-ampere ratings shall be as follows:

25	75
37.5	100
50	167

3.2 Voltage ratings and tap ratings

3.2.1 Voltage ratings shall be in accordance with table 1.

3.2.2 No taps shall be provided.

Table 1–Transformer high-voltage ratings and insulation levels

High-Voltage Rating (Volts)	Minimum BIL (kV)
4160 GrdY/2400	60
8320 GrdY/4800	75
12000 GrdY/6930	95
12470 GrdY/7200	95
13200 GrdY/7620	95
13800 GrdY/7970	95
16340 GrdY/9430	95
22860 GrdY/13200	125
23900 GrdY/13800	125
24940 GrdY/14400	125
34500 GrdY/19920	150

4 Basic lightning impulse insulation levels and dielectric test levels

4.1 Basic lightning impulse insulation levels (BILs) shall be in accordance with table 1 and 6.2.1.

4.2 Dielectric test levels shall be in accordance with the distribution levels in ANSI/IEEE C57.12.00.

Copyright The Institute of Electrical and Electronics Engineers, Inc.
Provided by IHS under license with IEEE
No reproduction or networking permitted without license from IHS

Copyright © 2003 IEEE. All rights reserved.

5 Tests

5.1 General

Except as specified in 5.2, tests shall be performed as specified in ANSI/IEEE C57.12.00 and ANSI/IEEE C57.12.90.

5.2 Dielectric tests

No applied voltage test is required on the high voltage winding. Induced voltage tests shall be performed by applying between the terminals of one winding a voltage that will develop from the high-voltage line terminals to ground a voltage of 1000 volts plus 3.46 times the rated transformer winding voltage, in no case shall the line to ground voltage developed exceed 40,000 volts for 125 kV BIL and 50,000 volts for 150 kV BIL. For this test the neutral terminal shall be grounded.

6 Construction

6.1 General

A pad-mounted, compartmental-type transformer shall conform to ANSI C57.12.28 and consist of a tank with high voltage and low-voltage cable terminating compartment, as shown in figure 1. The compartment shall be separated by a barrier of metal or other rigid material.

6.1.1 The high-voltage and low-voltage compartments shall be located side-by-side on one side of the transformer tank. When viewed from the front, the low-voltage compartment shall be on the right.

6.1.2 Access to the terminal compartments shall be provided by a single door or by individual compartment doors. If individual compartment doors are provided, they shall be so constructed as to provide access to high-voltage compartment only after the door to the low-voltage compartment has been opened. There shall be one or more additional captive fastening devices that must be disengaged before the high-voltage door can be opened. Where the low-voltage compartment door is of a flat-panel deign, or where only a single door is provided, the door shall have three-point latching with a handle provided for a locking device. If a lift-up hood or single door provides access to both the high-voltage compartment and the low-voltage compartment, one-point latching with provision for a locking device shall be provided, along with an additional door or lift-out panel that must be removed before access can be gained to the high-voltage compartment.

6.1.3 The bottom edges of the compartments shall be so constructed as to provide for the use of hold-down devices accessible only from inside the compartments.

6.1.4 The construction of the unit shall be such that it can be lifted, skidded, or slid, or a combination of these, into place on the mounting surface without disturbing the high-voltage or low-voltage cables.

6.1.5 The transformer base shall be arranged for rolling in two directions; parallel to and at right angles to one side of the transformer.

6.1.6 The lifting provisions shall be on the tank to provide a distributed balanced lift in a vertical direction for the completely assembled transformer and shall be designed to provide a safety factor of 5. The safety factor of 5 is the ratio of the ultimate stress of the material used to be working stress. The working stress is the maximum combined stress developed in the lifting provisions by the static load of the completely assembled transformer.

Copyright The Institute of Electrical and Electronics Engineers, Inc.
Provided by IHS under license with IEEE
No reproduction or networking permitted without license from IHS

Copyright © 2003 IEEE. All rights reserved.

6.2 Bushings and terminals

6.2.1 The electrical characteristics and clearances of the completely assembled high-voltage bushing and low-voltage terminals shall be as shown in table 2.

Table 2–Electrical characteristics and minimum electrical clearances of high-voltage bushings and low-voltage terminals

Rating (volts)	BIL (kV)	60 Hz Dry-One-Minute Withstand (kV)	Minimum Clearance Live Parts to Ground* (Inches)
240/120	30	10	1
4160 GrdY/2400	60	21	2-1/2
8320 GrdY/4800	75	27	3-1/2**
12000 GrdY/6930 to 16340 GrdY/9430	95	35	5**
22860 GrdY/133200 to 24940 grdY/14400	125	42	5-3/4**
34500 GrdY/19920	150	70	8**

* These dimensions should be increased wherever possible to allow the user ease in making connections.
**Where clearances are less than those shown, an adequate non-hygroscopic insulating barrier shall be provided, but in no case shall the dimension between live parts and the barrier be less than four inches for 150 BIL, three inches for others. The use of barriers shall not reduce the above electrical characteristics.

6.2.2 The number, location, and arrangement of the high-voltage bushings and low-voltage terminals shall be as shown in figure 1.

6.2.3 High-voltage bushings shall have tinned copper alloy clamp-type connectors and shall be arranged fro vertical take-off. The clamp connectors shall accommodate No. 8 AWG solid to 2/0 AWG stranded conductors and shall be as shown in figure 2.

6.2.4 The H_2 end of the high-voltage winding shall be securely connected internally to the grounded clamping structure or the tank. This connection shall be independent of all other electrical connections.

6.2.5 Low-voltage line and neutral terminals shall be in accordance with figure and arranged for vertical take-off. Terminal dimensions shall be as shown in figure 3.

6.2.6 The low-voltage neutral shall be either a blade connected directly to the tank or a fully insulated terminal. If a fully insulated terminal is used, a ground pad shall be provided on the outer surface of the tank. One or more removable ground straps suitably sized for the short-circuit rating of the transformer as defined in ANSI C57.12.00 shall be provided and connected between the low-voltage neutral terminal and ground pad.

6.2.7 Bushing and terminal designations shall be as defined in ANSI C57.12.70. The high-voltage bushing and low voltage terminal designations and locations are shown in figure 1.

The identification of bushing and terminal connections shall be shown on the instruction nameplate.

Copyright The Institute of Electrical and Electronics Engineers, Inc.
Provided by IHS under license with IEEE
No reproduction or networking permitted without license from IHS

Copyright © 2003 IEEE. All rights reserved.

6.3 High-voltage and low-voltage compartments

6.3.1 The compartment door or doors shall be of sufficient size to provide adequate operating and working space when removed or open. The doors shall either be equipped for latching in the open position or designed for manual removal.

6.4 Instruction nameplate

6.4.1 The instruction nameplate shall be located in the low-voltage compartment and shall be readable with the cables in place. where the nameplate is mounted on a removable part, the manufacturer's name and the transformer serial number shall be permanently affixed to a non-removable part.

6.4.2 The nameplate shall conform to Nameplate A as described in table 9 of ANSI C57.12.00 except the BIL rating shall be shown for 34500 GrdY/19920 v units.

6.5 Oil preservation

6.5.1 The transformer shall be of sealed-tank construction. Sealed-tank construction is that construction which seals the interior of the tank from the atmosphere and in which the gas volume plus the oil volume remain constant. The transformer shall remain effectively sealed for a top-oil temperature range of -5 to +105°C continuous and under operating conditions as described in ANSI/IEEE C57.91.

6.5.2 A replaceable valve shall be provided to relieve pressure in excess of pressure resulting from normal operation, which builds up slowly due to overloads, high ambient temperatures, external secondary faults, and internally incipient faults in the transformer windings, with the emission of only a negligible amount of oil. The valve shall be furnished in the low-voltage terminating compartment on the tank wall above the 140°C top oil level, by the manufacturer's calculation, and shall be located so as not to interfere with the use of the high-voltage and low-voltage bushings, the operating handle of the low-voltage and low-breaker, and the high-voltage fusing. The inlet port shall be 1/4 inch or larger NPT (or NF thread with gasket), sized for the specified minimum flow rate. Exposed parts shall be of weather withstand oil vapor and a 105°C temperature continuous under operating conditions as described in ANSI/IEEE C57.91, without seizing or deteriorating, for the life of the transformer. The valve shall have a pull ring for manually reducing pressure to atmospheric using a standard hook-stick and shall be capable of withstanding for one minute a static pull force of 25 pounds (11.34 kg) without permanent deformation. The valve shall withstand for one minute a static force of 100 pounds (45.36 kg) applied normal to its longitudinal axis at the outer most extremity of the body. When specified, the venting port on the outward side of the valve head seat shall be protected to prevent entry of dust, moisture, and insects before and after the valve has actuated; or a weather-cap-type indicator shall be provided, which will remain attached to the valve and provide positive indication to an observer that the valve has operated. Venting and sealing characteristics shall be as follows:

Cracking pressure	10 psig ± 2 psig
Resealing pressure	6 psig minimum
Zero leakage from resealing pressure to minus 8 psig	
Flow at 15 psi	35 SCFM minimum (where SCFM is the flow in cubic feet per minute corrected for air pressure of 14.7 psi and air temperature of 21.1°C)

6.6 Tanks

6.6.1 The tank shall be of sufficient strength to withstand a pressure of 7 psig without permanent distortion, and 15 psig without rupturing or affecting cabinet security as described in ANSI C57.12.28. A 1/2-inch minimum NPT upper plug (or cap) for filling and pressure testing shall be provided in the low voltage terminating compartment. A 1/2-inch minimum NPT drain plug (or cap) shall be provided in the low voltage terminating compartment. Suitable means for indicating the correct liquid level at 25°C shall be provided.

--`,,-`-`,,`,,`,`,,`---

Copyright The Institute of Electrical and Electronics Engineers, Inc.
Provided by IHS under license with IEEE
No reproduction or networking permitted without license from IHS

Copyright © 2003 IEEE. All rights reserved.

6.6.2 The cover shall be welded or shall be bolted in place with adequate gasketing.

6.6.3 Tank ground provisions shall consist of two steel pads, each with a 1/2-13 UNC tapped hole, 7/16-inch deep. These ground pads shall be welded on or near the transformer base, one in the high-voltage compartment and one in the low-voltage compartment, as shown in figure 1. In cases where the transformer tank and compartments are separate, they shall be electrically bonded.

6.6.4 Mounting provisions for the usage arrester shall consist of two steel pads, each with 1/2-13 UNC tapped holes, 7/16-inch deep or 1/2-13 UNC studs, 1-inch long, located in the high-voltage compartment as shown in figure 1.

7 Storage and installation

7.1 Storage

The transformer shall be stored in a vertical position and shall remain essentially in that position at all times including transport to the site and during installation.

7.2 Installation

Equipment manufactured to this standard may be installed in areas where environmental and climatic conditions make operation at varying angles of tilt from the horizontal an important consideration. Under these circumstances, the user may wish to make a particular maximum “angle of tilt” part of their specification.

8 Other requirements that may be specified for some applications

Certain specific applications call for transformer requirements not covered in Sections 3 through 6. They shall be made only when specified in conjunction with the requirements of Section 3 through 6. These specific requirements may change the dimensions in figures 1, 2, and 3. They are not included in this standard an din order to avoid the implication of greater or lesser availability by listing some and omitting others.

--`,,`-`-`,,`,,`,`,,`---

Copyright The Institute of Electrical and Electronics Engineers, Inc.
Provided by IHS under license with IEEE
No reproduction or networking permitted without license from IHS

Copyright © 2003 IEEE. All rights reserved.

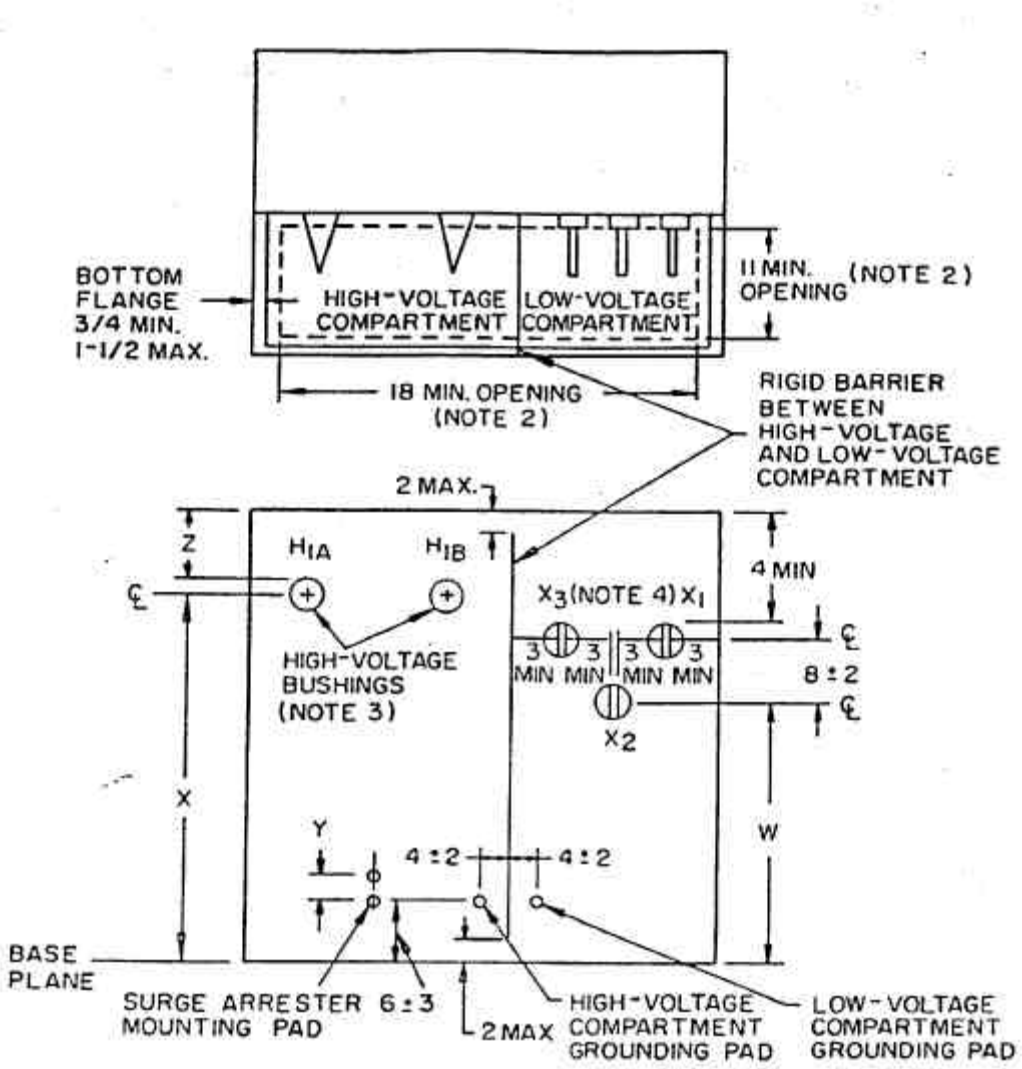

BIL (kV)	X	X	Y	Z (Minimum)
60, 75, 95	20 ± 4	22 ± 2	2-1/2 ± 1/4	5
125	25 ± 9	30 ± 6	2-1/2 ± 1/4	5-3/4
150	25 ± 9	36 ± 6	9-1/4 ± 1/4	8

NOTES
1 All dimensions are in inches unless otherwise specified.
2 This is the minimum opening in the bottom of the compartment for cable entrance.
3 When loop feed is not required, omit one high-voltage bushing.
4 Low voltage is shown for additive polarity transformers. The location of X_1 and X_3 is reversed for subtractive polarity.

Figure 1–Interchangeability dimensions

Copyright The Institute of Electrical and Electronics Engineers, Inc.
Provided by IHS under license with IEEE
No reproduction or networking permitted without license from IHS

Copyright © 2003 IEEE. All rights reserved.

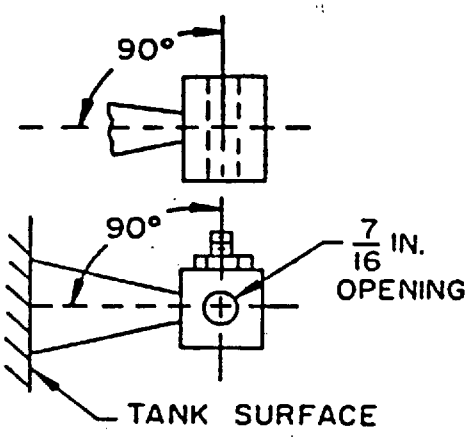

NOTES
1 Threaded parts of the connector shall be removable without removing the bushings.
2 Connector clamping bolts shall be 3/8-inch NC threads class-2 fit.
3 One or two connector clamping bolts may be used, but U-bolts or J-bolts shall not be used.

Figure 2–High-voltage terminals

Copyright The Institute of Electrical and Electronics Engineers, Inc.
Provided by IHS under license with IEEE
No reproduction or networking permitted without license from IHS

Copyright © 2003 IEEE. All rights reserved.

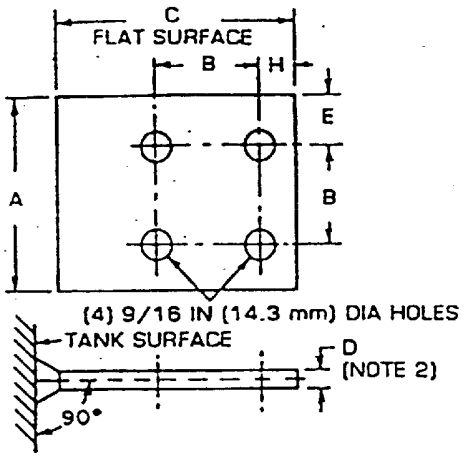

(a)

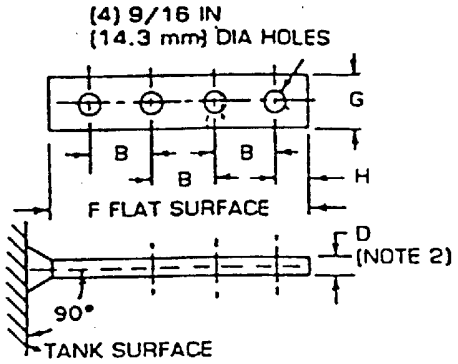

(b)

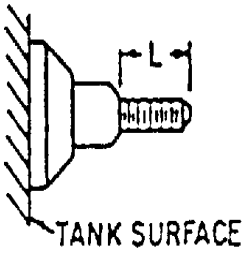

Dimensions (Note 1)	Inches	Millimeters
A	3-1/2	88.9
B	1-3/4	44.5
C	3-3/8 min.	85.7 min.
D	1/4 min.	6.4 min.
E	7/8	22.2
F	6-3/4 min.	171.4 min.
G	1-3/8 min.	35.0 min.
H	5/8	15.9

kVA rating	Thread size Note 3	Minimum L (Note 3)	
		in.	mm
25–75	0.625–11 UNS-2A	1.25	31.9
100–167	1.000–14 UNS 2S	1.75	44.5

(c)

NOTES
1 All dimensions are nominal, except as noted.
2 Greater thickness may be required to provide adequate conductivity.
3 Larger thread size or length, or both, may be required if materials other than copper are used.
4 Corners and edges may be rounded for figures 3(a) and 3(b).

Figure 3–Low-voltage terminals

Copyright The Institute of Electrical and Electronics Engineers, Inc.
Provided by IHS under license with IEEE
No reproduction or networking permitted without license from IHS

Copyright © 2003 IEEE. All rights reserved.