IEEE Guide for Application of Transformer Connections in Three-Phase Distribution Systems

Sponsor
Transformers Committee
of the
IEEE Power Engineering Society

Approved 2 June 1977
Reaffirmed 11 June 1987
Reaffirmed 18 June 1992

Institute of Electrical and Electronics Engineers

Secretariat

Edison Electric Institute
Institute of Electrical and Electronics Engineers
National Electric Manufacturers Association

Approved May 19, 1978
Approved March 2, 1989

American National Standards Institute

Published by

The Institute of Electrical and Electronics Engineers, Inc
345 East 47th Street, New York, NY 10017

Copyright The Institute of Electrical and Electronics Engineers, Inc.
Provided by IHS under license with IEEE
No reproduction or networking permitted without license from IHS
Not for Resale

American National Standard

An American National Standard implies a consensus of those substantially concerned with its scope and provisions. An American National Standard is intended as a guide to aid the manufacturer, the consumer, and the general public. The existence of an American National Standard does not in any respect preclude anyone, whether he has approved the standard or not, from manufacturing, marketing, purchasing, or using products, processes, or procedures not conforming to the standard. American National Standards are subject to periodic review and users are cautioned to obtain the latest editions.

CAUTION NOTICE: This American National Standard may be revised or withdrawn at any time. The procedures of the American National Standards Institute require that action be taken to reaffirm, revise, or withdraw this standard no later than five years from the date of publication. Purchasers of American National Standards may receive current information on all standards by calling or writing the American National Standards Institute.

© Copyright by

The Institute of Electrical and Electronics Engineers, Inc

No part of this publication may be reproduced in any form, in an electronic retrieval system or otherwise, without the prior written permission of the publisher.

Copyright The Institute of Electrical and Electronics Engineers, Inc.
Provided by IHS under license with IEEE
No reproduction or networking permitted without license from IHS Not for Resale

Foreword

(This Foreword is not a part of ANSI/IEEE C57.105-1978, American National Standard Guide for Application of Transformer Connections in Three-Phase Distribution Systems.)

In the fall of 1968, a Working Group was formed by the Performance Characteristics Subcommittee of the IEEE Transformers Committee to prepare a user's guide for application of Y-Y transformers considering user systems, manufacturing capabilities, tank heating, ferroresonance and telephone interference. The scope of the proposed user's guide was subsequently expanded to cover the full range of transformer connections commonly used in 3-phase distribution systems with emphasis on those characteristics of connections which distinguish one from another, appear most prominently with asymmetrical system conditions, and affect the selection of connections.

The guide assumes the reader has an educational or practical background equivalent to that of a graduate electrical engineer with some knowledge of transformers and distribution practices. Recognizing from the start, however, that the guide would be most needed by and most useful to the engineer with relatively little experience, the Working Group has incorporated explanatory material where considered to be helpful.

The Institute wishes to acknowledge its indebtedness to those who have given so freely of their time and knowledge to the development of this guide.

At the time it approved this standard, C57 had the following membership:

H. D. Lewis, *Chair*
C. R. Wilmore, *Secretary*

Bonneville Power Administration ..... George W. Iliff
Electric Light and Power Group ..... R. R. Best
I. O. Berkhan
I. H. Koponen
J. P. Markey (Alt)
P. H. Philippidis
W. A. Richter
B. F. Smith
E. A. Villasuso
Institute of Electrical and Electronics Engineers ..... S. Bennon
W. P. Burt
J. C. Dutton
D. C. Johnson (Alt)
L. W. Long
D. E. Massey
Naval Facilities Engineering Command ..... Leonard W. Johnson
National Electrical Manufacturers Association ..... L. C. Aicher
W. R. Courtade
J. D. Douglass
W. C. Kendall
G. W. Mayall (Alt)
W. J. McNutt
Norman M. Neagle (Alt)
R. L. Schwab
R. E. Uptegraff, Jr
G. C. Wilburn (Alt)
Rural Electrification Administration ..... J. C. Arnold, Jr
Tennessee Valley Authority ..... L. R. Smith
Underwriters Laboratories ..... W. A. Farquhar (Alt)

Copyright The Institute of Electrical and Electronics Engineers, Inc.
Provided by IHS under license with IEEE
No reproduction or networking permitted without license from IHS
Not for Resale

E. J. Huber
U. S. Bureau of Reclamation ..... R. H. Richardson

This guide was developed by a Working Group of the Performance Characteristics Committee of the IEEE Transformers Committee of the IEEE Power Engineering Society which had the following membership:

L. W. Long, *Chair*

J. D. Borst	K. M. McWilliams	D. R. Smith
D. E. Massey	D. A. Roach	

Other members who have served in the past are:

E. R. Freitag*	A. M. Lockie	R. L. Schmid
R. H. Hollister	R. L. Macdonald	

*First chairman

Special acknowledgement is due C. R. French, Chairman of the Performance Characteristics Subcommittee at the time of Working Group formation, who saw the need for this work and contributed substantially to the initial efforts.

The Transformers Committee of the IEEE Power Engineering Society of 1976 and 1977 reviewed and approved this standard.

When this standard was approved June 2, 1977, the IEEE Standards Board had the following membership:

William R. Kruesi, *Chair*
Irvin N. Howell, Jr, *Vice Chair*
Ivan G. Easton, *Secretary*

William E. Andrus	R. O. Duncan	Donald T. Michael
Jean Jacques Archambault	Charles W. Flint	Voss A. Moore
Mark Barber	Jay Forster	William S. Morgan
Edward J. Cohen	Ralph I. Hauser	William J. Neiswender
Warren H. Cook	Joseph L. Koepfinger	Ralph M. Showers
Louis Costrell	Irving Kolodny	Robert A. Soderman
R. L. Curtis	Benjamin J. Leon	Leonard W. Thomas, Sr
David B. Dobson	Thomas J. Martin	B. W. Whittington

Copyright The Institute of Electrical and Electronics Engineers, Inc.
Provided by IHS under license with IEEE
No reproduction or networking permitted without license from IHS
Not for Resale

CLAUSE PAGE

1. Scope 1

2. Electrical Connections 1

2.1 Primary and Secondary Systems 1
2.2 Δ and Y Connections 2
2.3 Zigzag-Connected Winding 3
2.4 T–T Connections 5
2.5 Terminal Markings, Phase Relations, and Paralleling 5
2.6 Connection of the Neutral 9

3. Magnetic Circuits 9

3.1 General Transformer Design 9
3.2 3-Phase Transformer Core Configuration 10
3.3 Magnetic Circuit Effects on 3-Phase Transformer Behavior 12

4. Harmonic Currents and Voltages 13

4.1 Exciting Current Harmonics 13
4.2 Harmonic Generation 13
4.3 Flow on 3-Phase System 14
4.4 Telephone Noise 15

5. Primary Faults 15

5.1 Types and Clearing of Faults 15
5.2 Ground Faults 15
5.3 Open Conductor Faults 16

6. Unbalanced Loads and Secondary Ground Faults 17

6.1 Phase-to-Neutral Loads 17
6.2 Phase-to-Phase Loads 18
6.3 Secondary Faults 19

7. Ferroresonance 20

7.1 Qualitative Description 20
7.2 Transformer Connections Highly Susceptible to Ferroresonance 22
7.3 Measures to Minimize the Probability of Ferroresonance with Ungrounded Primary Connection 24
7.4 Transformer Connections Least Susceptible to Ferroresonance 25
7.5 Measures to Minimize the Probability of Ferroresonance with Grounded Primary Connections 26
7.6 Bibliography 27

8. Unsymmetrical Banks and Special Connections 27

8.1 T-Connected 27
8.2 Circulating Delta Currents 27
8.3 Grounded Delta Secondary 28
8.4 Open-Δ Secondary 30
8.5 Open-Y primary to 4-Wire 208 V Service 31
8.6 Effect on Voltage Balance 31

Copyright The Institute of Electrical and Electronics Engineers, Inc.
Provided by IHS under license with IEEE
No reproduction or networking permitted without license from IHS
Not for Resale

CLAUSE PAGE

9. References and Bibliography 31

9.1 General 31
9.2 Ferroresonance 31
9.3 Special Connections 33

Copyright The Institute of Electrical and Electronics Engineers, Inc.
Provided by IHS under license with IEEE
No reproduction or networking permitted without license from IHS Not for Resale

IEEE Guide for Application of Transformer Connections in Three-Phase Distribution Systems

1. Scope

This guide concerns transformer connections in 3-phase distribution systems. Distribution systems are characterized by primary voltages up to and including 34.5 kV, usually have a preponderance of connected transformers with low-voltage windings below 1000 V and furnish electric service to consumers. The characteristics of the various transformer connections and possible operating problems under normal or abnormal conditions are treated.

All combinations of Δ and Y, grounded and ungrounded, T connected, zigzag, and certain special connections are considered. Only two-winding transformers are included.

Phasing procedures and loading practices are not covered. Guides for loading of oil-immersed and dry-type transformers are available in publications of the American National Standards Institute: American National Standard C57.91-1974, Appendix to C57.12.00-1973, Guide for Loading Mineral Oil-Immersed Overhead-Type Distribution Transformers with 55°C or 65°C Average Winding Rise; American National Standard C57.92-1962, Appendix to C57.12 Standards, Guide for Loading Oil-Immersed Distribution and Power Transformers; and American National Standard C57.96-1959, Appendix to C57.12 Standards, Guide for Loading Dry-Type Distribution and Power Transformers, respectively.

2. Electrical Connections

2.1 Primary and Secondary Systems

In general, permissible transformer connections are related to the type of service to be delivered and the type of primary supply.

2.1.1 *Types of Service*

Three-phase services may be 3-wire or 4-wire. The 3-wire service is quite commonly called “delta” service and consists only of three-phase conductors, having no neutral conductor. The 4-wire service is commonly called a “wye” service

Copyright © 1978 IEEE All Rights Reserved

Copyright The Institute of Electrical and Electronics Engineers, Inc.
Provided by IHS under license with IEEE
No reproduction or networking permitted without license from IHS
Not for Resale

and includes a neutral conductor which is customarily grounded at the service for 208 Y/120 and 480 Y/277 V services and, if the supply originates outside the building served, at one other point on the secondary side of the transformer supplying the system, either at the transformer or elsewhere. Some 4-wire services are derived from a Δ-or open-Δ-connected secondary with the center tap of one leg grounded. This connection is commonly rated 240/120 V, 3-phase, 4-wire, and is also grounded in the manner described.

2.1.2 *Types of Sources*

The primary supply may be either an ungrounded, effectively grounded, or impedance-grounded source. An ungrounded supply may have a grounded shield wire or cable sheath, but such conductor should not be mistaken for a neutral conductor if it is not intended for such service. The ungrounded supply is frequently called a delta (Δ) source because such systems generally consist of the three phase conductors only.

The effectively grounded distribution system normally includes a solidly grounded neutral conductor derived from the source. Usually the neutral is multigrounded along the feeder. Such systems are referred to as “grounded Y” systems.

The impedance-grounded systems are usually found in industrial plant circuits operating at distribution voltage levels of 4160 V and higher. Such systems may be Y or Δ. If Y, the neutral is derived from the source, but is insulated and grounded through a resistor or reactor. If Δ, the grounding is through a grounding transformer to which an external impedance may or may not be connected. Such systems allow the flow of sufficient ground fault current to afford positive high-speed protective relaying, but limit the ground fault current in order to minimize damage to faulted equipment. Although the impedance-grounded Y systems are sometimes said to have a “floating neutral,” this terminology is misleading. The neutral is actually stabilized at the source, and with fairly well-balanced loads, the neutral voltage remains near ground voltage except during fault conditions.

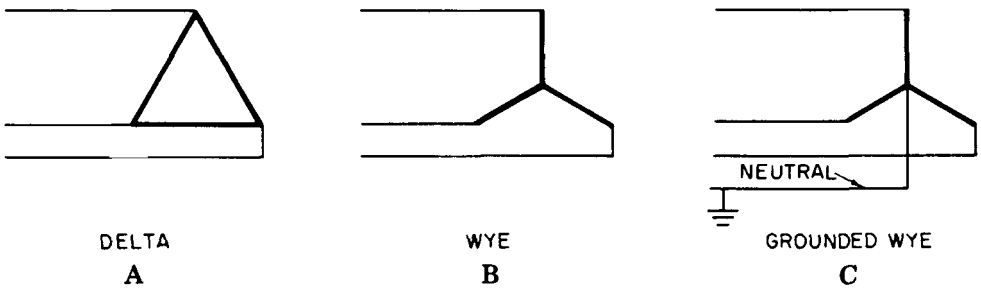

Figure 1— Quasi-Phasor Δ and Y Connection Diagrams
A—Δ, B—Y, C—Grounded Y

In the Y systems, the integrity of the neutral conductor is very important to proper z operation and safety.

2.2 Δ and Y Connections

In both 3-phase transformers and banks of three single-phase transformers, the transformer windings are connected either phase-to-phase or phase-to-neutral in all but certain special connections (for example, the T connection). When the windings are connected phase-to-phase as in Fig 1A, the quasi-phasor arrangement of the connection diagram resembles the capital Greek letter delta from which it gets the name and symbol Δ. When the windings are connected phase-to-neutral as in Fig 1B and C, the quasi-phasor connection diagram resembles the letter Y which is used as its symbol. (The Y is inverted in the figure so as to conform to its usual appearance in standard diagrams.) Y connections are also referred to as star connections, a more general term applicable to systems with any number of phases. Y connections may have a grounded or ungrounded neutral. In this guide the term Y and symbol Y will represent the ungrounded neutral connection, and the term Y-grounded and symbol YG will represent the grounded neutral connection.

Copyright © 1978 IEEE All Rights Reserved

Copyright The Institute of Electrical and Electronics Engineers, Inc.
Provided by IHS under license with IEEE
No reproduction or networking permitted without license from IHS Not for Resale

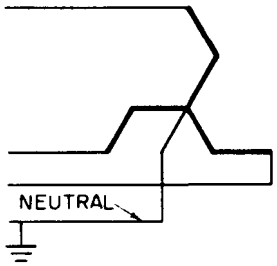

Figure 2— Quasi-Phasor Zigzag Connection Diagram

The primary and secondary windings may be connected in any combination desired. However, certain combinations may be quite undesirable for a particular application. Table 1 shows all combinations of Δ and Y connections and indicates the characteristics of each configuration which relate to its application. The connections which should receive special consideration to avoid misapplication are indicated to be "problem" connections.

2.3 Zigzag-Connected Winding

The zigzag-connected winding has each electrical phase linked equally by two magnetic phases as shown in Fig 2. This winding connection is most commonly used in a single-winding transformer to perform grounding duty. The connection presents a low-impedance path to ground for zero-sequence currents (that is, current components of equal magnitude and phase angle in each leg), and therefore gound current flows with any shift of the system neutral. Grounding transformers may be sized so as to furnish only the magnitude of ground current required for relaying or may be large enough to stabilize the neutral of an otherwise ungrounded system. In the latter case, the grounding transformer supplies the unbalanced phase-to-neutral load as well as ground fault current.

Table 1— Application Characteristics of Connections

Connection		Suitable for Ungrounded Source	Suitable for 4-Wire Service	Phase Shift High-Voltage to Low-Voltage (Note 1)	Subject to Primary Grounding Duty	Triple Harmonic Primary Line Currents Suppressed	"Problem" Connections (Note 2)
Primary	Secondary						
	Δ	Yes	No	0°	No	Yes	
Δ		Yes	No	−30°	No	Yes	
		Yes	Yes	−30°	No	Yes	
		Yes	No	−30°	No	Yes	
	Y	Yes	No	0°	No	Yes	
		Yes	No	0°	No	Yes	Note 3

Copyright © 1978 IEEE All Rights Reserved

Copyright The Institute of Electrical and Electronics Engineers, Inc.
Provided by IHS under license with IEEE
No reproduction or networking permitted without license from IHS
Not for Resale

Table 1— Application Characteristics of Connections (Continued)

Connection		Suitable for Ungrounded Source	Suitable for 4-Wire Service	Phase Shift High-Voltage to Low-Voltage (Note 1)	Subject to Primary Grounding Duty	Triple Harmonic Primary Line Currents Suppressed	"Problem" Connections (Note 2)
Primary	Secondary						
		Note 4	No	–30°	Yes	Yes	Note 4
		No	No	0°	No	No	
		No	Yes	0°	No	No	Note 5
		Yes	No	Note 6	No	No	
		Yes	Yes	Note 6	No	No	
		Note 4	No	Note 6	Yes	No	Note 4
		Note 4	Yes	Note 6	Yes	No	Note 4
		Yes	Yes	0°	No	Yes	
		Yes	Yes	–30°	No	Yes	
		No	Yes	–30°	No	No	

NOTES:

1 — Based on standard connections and phasor diagrams.

2 — "Problem" connections are those connections which should receive special consideration to avoid misapplication.

3 — This connection is incapable of furnishing a stabilized neutral, and its use may result in phase-to-neutral overvoltage on one or two legs as a result of unbalanced phase-to-neutral load.

4 — Connections designated act as primary grounding transformers and should not be used unless intended for such duty.

5 — The 3-phase transformer of 3-legged core-form construction is susceptible to tank heating with unbalanced phase-to-neutral loads or ground faults.

6 — The T connections in this table represent either similar or rotated orientation. The connection can be made to simulate any of the Δ and Y combinations.

Copyright © 1978 IEEE All Rights Reserved

--`,,`-`-`,,`,,`,`,,`---

Copyright The Institute of Electrical and Electronics Engineers, Inc.
Provided by IHS under license with IEEE
No reproduction or networking permitted without license from IHS

Not for Resale

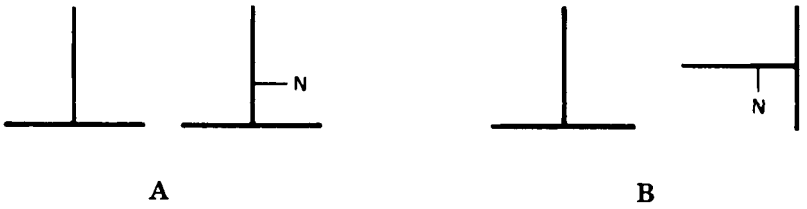

Figure 3— Orientation of Windings in T Connection
A—0° or Similar Orientation Simulates Y-Y,
B—90° or Rotated Orientation Simulates Δ-Y

The zigzag winding is also combined with either Y or Δ connections in two-winding transformers in order to provide a desired phase relation with grounded neutral.

In this guide the symbol ZZ will indicate the zigzag connection, and the symbol ZZG will indicate that the neutral is grounded. Table 1 shows application characteristics of transformer banks with zigzag-grounded secondaries.

2.4 T-T Connections

Some 3-phase distribution transformers consist of two single-phase transformers in a common tank with the interconnection of the two primaries and two secondaries in the manner shown in Fig 3, the end of one winding connecting to the midpoint of the other to form a configuration similar to the letter T. The crossbar of the T is called the main winding, and the stem is called the teaser winding. Voltages of the main and teaser coils are such that balanced 3-phase voltages are obtained. The neutral point is at one third of the teaser coil from the main. Although not actually a symmetrical connection, the 3-phase T-connected transformer simulates the symmetrical Y and Δ connections.

Basically only two configurations are possible, although the designation of terminals (see 2.5.1) so as to simulate standard Δ-Y, Y-Δ, Δ-Δ, and Y-Y may seem to increase the number of connections possible to four. One basic arrangement is shown in Fig 3A with both primary T and secondary T oriented similarly. This connection simulates Δ-Δ or Y-Y. The other basic connection is shown in Fig 3B with one T rotated 90° relative to the other. This connection simulates Δ-Y or Y-Δ. T-connected transformers may be paralleled with Δ and Y combinations provided the usual requirements for paralleling are met (see 2.5.3).

The T connection has two very interesting properties. First, if the neutral is grounded, a T-connected winding presents a low impedance to zero-sequence current and permits the flow of such currents independently of the other winding. The implication of this fact is that the primary should not be grounded since the transformer will then act as a grounding transformer (see 2.6), but it still is capable of providing a 4-wire grounded service even with an ungrounded primary, and it may do so regardless of relative orientation of the windings. The symbol TG will be used in this guide to represent a T-connected winding with neutral grounded.

Second, the flow of triple-harmonic excitation currents in the windings and in the lines is not suppressed regardless of whether the primary or secondary is grounded or not, and these harmonics may flow on the phase conductors only. Harmonic voltages and currents and their effects are discussed in Section 4.

Table 1 shows the application characteristics of T-connected transformers.

2.5 Terminal Markings, Phase Relations, and Paralleling

2.5.1 *Terminal Designation*

American National Standard C57.12.20-1974, Requirements for Overhead Type Distribution Transformers 67 000 Volts and Below, 500 kVA and Smaller, and American National Standard C57.12.70-1964 (R 1971), Terminal

Copyright © 1978 IEEE All Rights Reserved

Copyright The Institute of Electrical and Electronics Engineers, Inc.
Provided by IHS under license with IEEE
No reproduction or networking permitted without license from IHS Not for Resale

Markings and Connections for Distribution and Power Transformers, are the standards which specify the terminal markings and connections for distribution and power transformers. The user should obtain copies of these standards because this guide is not intended to supplant or to unnecessarily repeat application information from the standards.

In general, however, the terminals of two-winding transformers and autotransformers without tertiaries are designated by the alphabetic symbols *H* and *X* for the high voltage and low voltage, respectively, with numerical subscripts to distinguish the winding ends and taps. Neutral terminals of 3-phase transformers are designated by the subscript 0; that is, H_0, X_0, and, for the case of a common neutral, H_0X_0. The three leads which connect to full phase windings of a 3-phase transformer are designated H_1, H_2, H_3 and X_1, X_2, X_3.

Single-phase transformers do not have the 0 subscript marking, but have markings of all leads brought out of the case in a subscript sequence 1, 2, 3, 4, 5, etc so that the lowest and highest numbers indicate the full winding. Most transformers have only two high-voltage leads brought out of the case, and if one of the two terminals is intended to be grounded, it is designated as H_2, the other being, of course, H_1. This convention also applies to low-voltage terminals X_1 and X_2, when only the two leads are brought out. However, the low-voltage leads brought out of the case of a single-phase transformer may number from 2 to 4 in commonly used ratings and are so designated that consecutive subscript values must indicate progress along the windings when connected in series.

2.5.2 *Phase Relations*

In a single-phase transformer conforming to the standard, the phase of H_1 and X_1 coincide. In a standard 3-phase transformer, the phase of H_1 and X_1 coincides if the connection is Y-Y, Δ-Δ, ZZ-Δ, or Δ-ZZ. If the connection is Y-Δ, Δ-Y, Y-ZZ, or ZZ-Y, then the phase of X_1 lags that of H_1 by 30°. Fig 4 shows the phasor relationship of these connections. This figure is taken from ANSI C57.12.00-1973 with the addition of the Y-ZZ combinations. The T-T windings are marked to simulate the Δ and Y combinations as indicated in Fig 3.

American National Standard C57.12.70-1964 (R1971) has a complete set of diagrams for the banking of three single-phase transormers and for the connection of 3-phase transformers in all combinations of Δ and Y. Also, connections for other angles of phase shift than 0° and 30° lagging are shown.

2.5.3 *Paralleling*

Four requirements must be met for paralleling transformers: (1) the phase relations on high-voltage and low-voltage sides must be the same, (2) the voltage ratios line-to-line must be equal or nearly so, (3) if connected for 4-wire service to phase-to-neutral loads, the voltages to neutral must also agree in ratio and phase, and (4) the impedances of the transformers in percent on transformer base must be equal or nearly so.

Requirement (1) is met if standard transformers with connections which give the same phase shift between H_1 and X_1 are used and if leads of similar marking on each transformer are connected together; that is, H_1 to H_1, X_1 to X_1, etc.

Requirements (2), (3), and (4) are necessary to maintain satisfactory load division between transformers and to avoid large circulating currents. Requirement (3) is not intended to mean that the Δ-Δ connection may not be paralleled with YG-YG, for example, but in such a circumstance, only the YG-YG transformer will supply the unbalanced phase-to-neutral load.

Calculation of load division or no-load circulating current is quite lengthy if exact methods are used. Approximate methods can be quite rapid and satisfactory. The assumptions of the method are (1) that transformer impedance is approximately the leakage reactance and (2) that the effect of load losses may be neglected. The method is best illustrated by an example.

Assume two transformers delivering 750 kVA at 480 V and 85% power factor with data as follows:

Copyright © 1978 IEEE All Rights Reserved

Copyright The Institute of Electrical and Electronics Engineers, Inc.
Provided by IHS under license with IEEE
No reproduction or networking permitted without license from IHS Not for Resale

	Transformer A	Transformer B
Rating (kVA)	500	300
High-voltage tap (volts)	13 200	12 470
Low-voltage rating (volts)	277/480	265/460
Impedance (%)	5.5	4.5
Load loss (%)	0.5	0.6

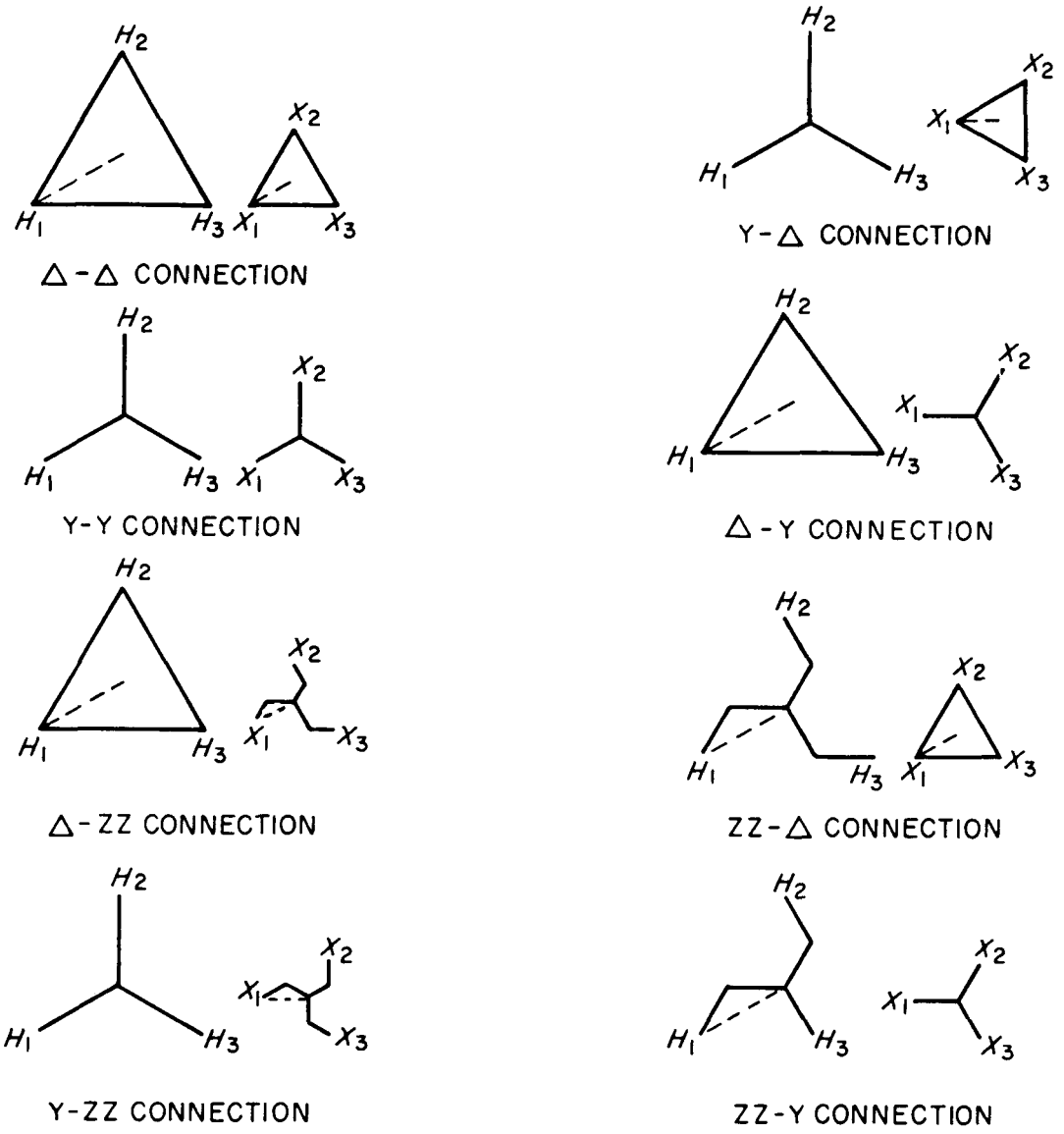

Figure 4— Phase Relation of Terminal Designations for 3-Phase Transformers

Copyright © 1978 IEEE All Rights Reserved

Copyright The Institute of Electrical and Electronics Engineers, Inc.
Provided by IHS under license with IEEE
No reproduction or networking permitted without license from IHS
Not for Resale

First, the impedance values are put on a common base. The base selected is 500 kVA, 13 200 V so that Transformer A values need not be shifted:

$$\frac{500}{300} \times \left(\frac{12\,470}{13\,200}\right)^2 \times 4.5 = 6.7\% \quad \text{impedance for Transformer B}$$

Second, the unbalanced open-circuit secondary voltage in percent is determined:

$$\left(\frac{13\,200}{12\,470} \times \frac{460}{480}\right) - 1100 = 1.44\% \quad \text{higher secondary voltage for Transformer B}$$

The load division is found by considering parallel impedances 5.5% and 6.7%, the load current being 150% of the base value for 500 kVA at 480 V.

Transformer A: $150 \times \frac{6.7}{5.5 + 6.7} = 82.4\%$ or 412 kVA

Transformer B: $150 \times \frac{5.5}{5.5 + 6.7} = 67.6\%$ or 338 kVA

These loads are at 85% power factor. To them must be added the no-load circulating current which is 90° lagging

$$\frac{1.44}{5.5 + 6.7} \times 100 = 11.8\% \text{ or } 59 \text{ kvar}$$

circulating forward through Transformer B and reverse direction through Transformer A.

Total load is now found.

Transformer A:

$$\begin{aligned} 412(0.85 + j0.527) = \; & 350 + j217 \\ & -j\;\;59 \\ \hline & 350 + j158 = 384 \text{ kVA} \end{aligned}$$

Transformer B:

$$\begin{aligned} 338(0.85 + j0.527) = \; & 287 + j178 \\ & +j\;\;59 \\ \hline & 287 + j237 = 372 \text{ kVA} \end{aligned}$$

Total load = 637 + j395 = 750 kVA at 85% PF

This example should not be construed to imply that continuous overload and possible overexcitation of Transformer B is permissible. Obviously an aggravated case has been chosen to emphasize the principles. For comparison, calculation by exact methods yields results not greatly different considering the poor paralleling characteristics of the transformers in this example.

Transformer A — 380 kVA at 89.8% PF

Transformer B — 373 kVA at 79.3% PF

Copyright © 1978 IEEE All Rights Reserved

Copyright The Institute of Electrical and Electronics Engineers, Inc.
Provided by IHS under license with IEEE
No reproduction or networking permitted without license from IHS
Not for Resale

2.6 Connection of the Neutral

The Y, ZZ, and T connections offer the opportunity to connect the neutral point of the transformer windings to the system neutral on either source side or load side, or both. If the neutral is grounded, the connection is referred to as a grounded-neutral connection.

Obviously, to serve phase-to-neutral loads, a grounded-neutral secondary is necessary. If the primary is not an effectively grounded system (see 2.1.2), the permissible connections are Δ-YG, Δ-ZZG, Y-ZZG, and T-TG, either orientation of the T-T sufficing. The YG-YG should not be used except on 4-wire effectively grounded primaries as it merely carries the system ground through the transformation, and the ZZ or T primary should never be grounded unless intended to serve as a ground source (see 2.3, 2.4, and the following paragraph).

Certain connections or winding configurations offer low impedance to the flow of zero-sequence currents. If the connection is such as to permit this condition on the primary side, the transformer will supply part of the unbalanced phase-to-neutral loads and line-to-ground fault currents. The transformer bank is said to be a ground source. Such connections on Y-grounded distribution primaries are a hindrance to providing reliable and sensitive ground-fault protection at the source substation. Furthermore, such transformer banks are subject to serious overloads under certain open-conductor fault conditions (see Section 5.). The YG-Δ connection is a ground source on the primary side. The grounded T winding is similar to the grounded zigzag connection in that the ground source capability is inherent in the grounded winding alone.

3. Magnetic Circuits

3.1 General Transformer Design

The ferromagnetic core is basic to power-frequency transformer operation. A fundamental understanding of the design, performance, and limitations of the magnetic circuit provides significant insight into transformer behavior.

3.1.1 *Ferromagnetic Material*

Ferromagnetic Material is characterized by its high relative permeability; that is, the ability to attain high levels of magnetic flux density at low values of magnetizing force. The flux density is a nonlinear function of magnetizing force, and the magnetizing characteristic exhibits decreasing values of permeability as the flux density approaches its maximum or saturation level. Near saturation the incremental relative permeability drops sharply, approaching a value of one. The magnetizing force in a transformer is provided by the magnetizing or exciting current flowing in the windings. This current is quite small provided the ferromagnetic material does not saturate.

3.1.2 *Basic Design Equation*

The high permeability of ferromagnetic materials allows the efficient transformation of power in transformers. The basis of this transformation is Faraday's law: $E = N\, d\,\varphi/dt$, where N is the number of winding turns, φ is the flux linked by the turns, t is time, and E is the voltage induced in the winding. In a ferromagnetic core transformer where the exciting current is small, the induced voltage is virtually equal to the applied voltage. Application of Faraday's law to transformers yields the basic design equation: $E \propto Nf\,\varphi_{max}$, where f is the frequency. In order to use core material efficiently, transformers are designed so that φ_{max} max approaches the saturation level.

3.1.3 *Hysteresis Losses*

Hysteresis losses represent that portion of the excitation losses required for the cyclic magnetization of ferromagnetic material. This energy loss occurs because only a portion of the energy taken from the electric circuit is stored and wholly recovered from the ferromagnetic material when the magnetizing force is removed.

Copyright © 1978 IEEE All Rights Reserved

Copyright The Institute of Electrical and Electronics Engineers, Inc.
Provided by IHS under license with IEEE
No reproduction or networking permitted without license from IHS Not for Resale

3.1.4 *Eddy-Current Losses*

The voltage induced by a time-changing magnetic field causes eddy currents to flow in electrical conductors lying in the field. The resultant energy losses are called eddy-current losses. Since core steel is a conductor, eddy-current losses are present in the core. The magnitude of these losses can be reduced by laminating the core material.

Not all the flux is restricted to the ferromagnetic core. This noncore flux can cause stray losses due to eddy currents within other transformer conductor materials such as the core clamping and tank. Excessive heating can result if these losses are not controlled.

3.1.5 *Core Construction*

Two basic core and coil configurations are used in the manufacture of transformers: core type and shell type. In the core type, the core is surrounded by the coils while in the shell type the cores surround the coil. Examples of core and shell configurations in single-phase transformers are given in Figs 5 and 6, respectively.

3.2 3-Phase Transformer Core Configuration

In a 3-phase transformer, the steady-state voltages applied to the individual phases are each displaced by 120° from one another. Under balanced conditions the fluxes in the individual phases are also displaced by 120° and the sum of the three fluxes is zero. The phase displacement of the fluxes allow 3-phase transformers to utilize core legs as flux-return paths for the other phases, thus permitting lower losses and more efficient use of core material.

Certain unbalanced conditions can cause the sum of the fluxes in the individual phases to be unequal to zero. The resulting zero-sequence or in-phase component of flux may require a ferromagnetic return path to assure proper transformer operation.

3.2.1 *3-Legged Core*

The 3-legged core configuration takes full advantage of the fact that the net flux is zero under balanced voltage conditions. It provides only one core leg for each phase, eliminating return legs completely. An example of a 3-legged core is shown in Fig 7. Any zero-sequence flux must return outside the core by way of a high-reluctance air path. Thus, the 3-legged core presents a high reluctance to zero-sequence flux.

3.2.2 *4-Legged and 5-Legged Cores*

The 4-legged core configuration provides a single return leg of full cross-section in addition to the phase legs. The 5-legged core configuration provides two return legs, each of reduced cross section, in addition to the phase legs. Typical 4-legged and 5-legged configurations are shown in Figs 8 and 9, respectively. With either configuration, the return leg(s) allows a degree of zero-sequence flux to be returned within the core, thus presenting a low reluctance to sequence flux below saturation of the return leg(s). Usual design practice is to provide sufficient iron cross section to tolerate normal phase flux in the return leg(s). Saturation of the return leg(s) will then occur when the zero-sequence voltage exceeds about 33% of the normal line-to-neutral voltage.

3.2.3 *Single-Phase Cores*

Some 3-phase transformers utilize single-phase core-coil assemblies. The triplex core configuration consists of three single-phase assemblies in a single tank. There is essentially no magnetic coupling between phases. The single-phase cores provide full capacity return paths. Thus, the triplex configuration presents a low reluctance to zero-sequence flux.

The duplex and T-connected transformers consist of two single-phase assemblies in a single tank. The single-phase cores provide full capacity return paths. These connections are discussed in Sections 2. and 8.

Copyright © 1978 IEEE All Rights Reserved

Copyright The Institute of Electrical and Electronics Engineers, Inc.
Provided by IHS under license with IEEE
No reproduction or networking permitted without license from IHS Not for Resale

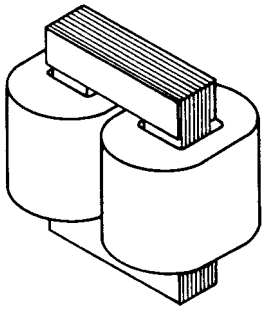

Figure 5— Single-Phase Core-Type Transformer

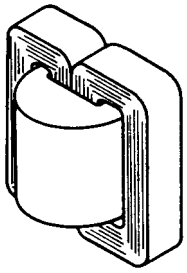

Figure 6— Single-Phase Shell-Type Transformer

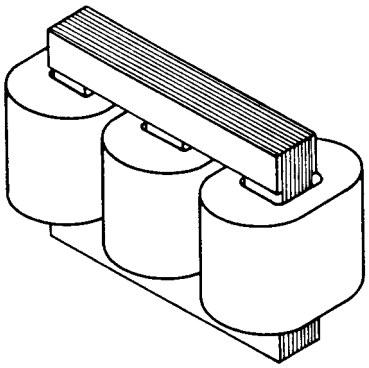

Figure 7— 3-Phase 3-Legged Core

Copyright © 1978 IEEE All Rights Reserved

Copyright The Institute of Electrical and Electronics Engineers, Inc.
Provided by IHS under license with IEEE
No reproduction or networking permitted without license from IHS
Not for Resale

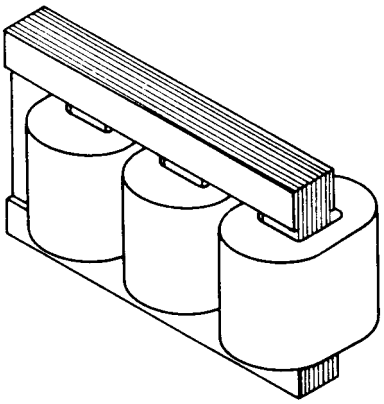

Figure 8— 3-Phase 4-Legged Core

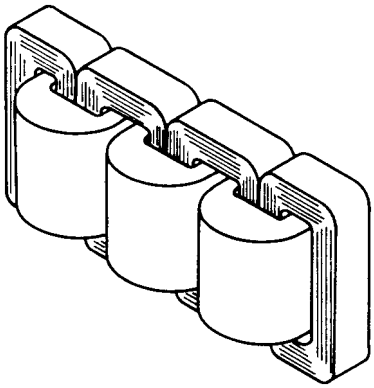

Figure 9— 3-Phase 5-Legged Core

3.3 Magnetic Circuit Effects on 3-Phase Transformer Behavior

Magnetic circuit design and configuration must be included in the consideration of 3-phase transformer performance and application.

3.3.1 *Inrush Current Transient*

When a transformer is subjected to switching, a core flux transient almost always results. Since economical transformer design dictates that the cores be operated near saturation under steady-state conditions, the flux transient may cause a core leg to saturate. At saturation the exciting current increases significantly. The large, but rapidly decaying, unidirectional exciting current which results is called inrush current. It can have a peak value far in excess of transformer rated current. Inrush current should be considered for source side protection coordination and is a significant factor in the ferroresonant behavior discussed in Section 7.

3.3.2 *Mutual Coupling*

In addition to the electrical coupling between phases of a 3-phase transformer, magnetic coupling exists between the phases for all core configurations except duplex an triplex. The phases are essentially magnetically isolated in the duplex and triplex designs. The magnetic coupling can affect the voltages on open phases and can have significant effects on switching voltages and ferroresonance.

Copyright © 1978 IEEE All Rights Reserved

Copyright The Institute of Electrical and Electronics Engineers, Inc.
Provided by IHS under license with IEEE
No reproduction or networking permitted without license from IHS Not for Resale

3.3.3 *Zero-Sequence Flux*

Certain external conditions such as faults and unbalanced loading can cause significant zero-sequence flux to occur for some connections. Unless a ferromagnetic return path is provide, this flux returns outside the core and can cause eddy-current heating in other transformer conductive materials such as the tank. The existence of zero-sequence flux either within or outside the core depends on both core configuration and winding connection.

Except for configurations utilizing single-phase core assemblies, 3-phase transformer cores do not provide full-capacity return legs for zero-sequence flux. Thus, if sufficient zero-sequence flux occurs, it will be forced to return outside the cores.

If the winding connection itself suppresses the flow of zero-sequence flux, then a return path is unnecessary. The Δ winding, because it acts as a short-circuited coil surrounding the entire core, largely suppresses zero-sequence flux. Thus, units with a Δ winding do not require a return leg.

However, if the winding connection can allow significant zero-sequence flux, then can return path is desirable to prevent excessive noncore flux. The Y-grounded-Y-grounded connection can sustain appreciable zero-sequence flux and requires a return path. Unless significant zero-sequence terminal voltage can be avoided, the 3-legged core configuration should not be used with this connection (see also 6.3.1).

4. Harmonic Currents and Voltages

4.1 Exciting Current Harmonics

Because of the nonlinear magnetization characteristic of iron cores, transformers require exciting currents with strong harmonic content even when excited by perfectly sinusoidal voltages. The harmonic current requirement is dependent upon the degree of iron saturation, and at ordinary levels of maximum flux, the third harmonic is most prominent. Customarily, the harmonic values are expressed as percentages of the rms value of the total exciting current. A typical case may be represented by these values: 45% third, 15% fifth, 3% seventh, and smaller percentages of higher frequency. Harmonic percentages for a given transformer do not change much within the usual range of terminal voltage variation. Normally, the even harmonics (second, fourth, etc) are not present in steady-state exciting currents.

4.2 Harmonic Generation

Because of their demand for harmonic excitation current, transformers may act as harmonic generators under certain system conditions. Under normal conditions, the voltage drop on a primary feeder due to transformer exciting current harmonics is negligible. But if the system is near resonance at a harmonic frequency, the system current response causes increased harmonic voltage drop.

The transformer exciting current harmonic itself does not change drastically, but the resonant or near-resonant harmonic currents between inductive and capacitive system elements reach relatively high levels. The resulting increased harmonic voltage drop may be sufficient to cause very noticeable voltage wave distortion. Thus, the influence of the transformer may be viewed as that of a low-energy constant-current source exciting a resonant response of the system. The harmonic currents and voltages produced may be objectionable.

Copyright © 1978 IEEE All Rights Reserved

Copyright The Institute of Electrical and Electronics Engineers, Inc.
Provided by IHS under license with IEEE
No reproduction or networking permitted without license from IHS Not for Resale

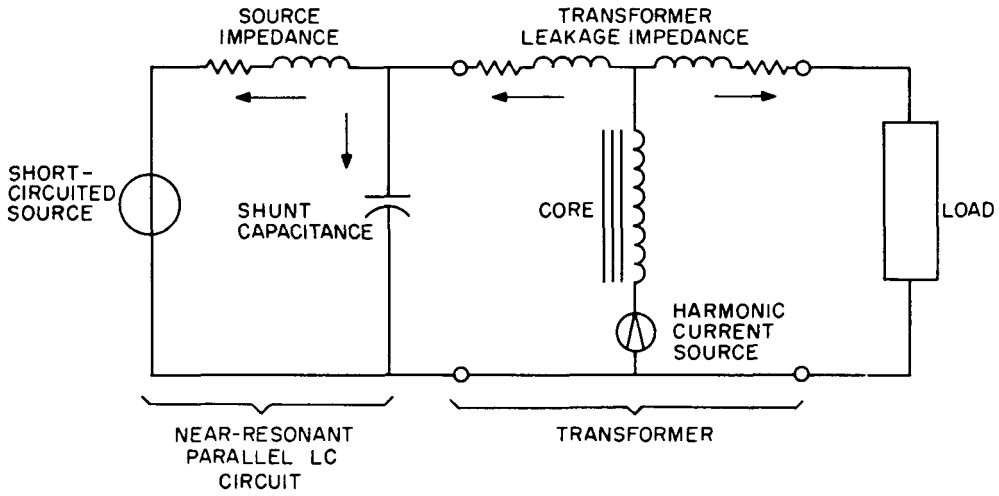

Figure 10— Schematic of Transformer Considered as Harmonic Current Source

Distribution operating experience indicates that shunt capacitor banks may be involved in harmonic resonances with the source inductance when abnormal waveforms occur. If so, the current wave form of the capacitor bank will reveal a high percentage of the harmonic.

A schematic diagram of a transformer acting as a harmonic generator is shown in Fig 10. Although actual systems are more complex than this simple case, the behavior is very well illustrated.

4.3 Flow on 3-Phase System

On ungrounded 3-phase supply systems, flow of the third harmonic current and its multiples on the primary feeder is suppressed. In symmetrical systems, the multiple third harmonic currents of all three phases have a common time phase. Consequently, their sum for all three phases cannot be zero unless each current itself is zero. Since no low-impedance path to neutral is provided by the ungrounded primary, however, the sum must be zero. Hence the third harmonic currents are suppressed.

With Δ-connected primaries or secondaries, the third harmonic of exciting current circulates in the low-impedance path of the closed Δ. Groups of single-phase and reasonably well balanced also present a low-impedance path for local circulation of thirds. However, when 3-phase transformers or banks of single-phase transformers are connected Y-ungrounded-Y-ungrounded, no path at all exists for the third harmonic excitation current. A third-harmonic voltage then appears across all 3-phase windings in common time phase and results in a displacement of the transformer neutral voltage. The neutral of the transformer connection thus exhibits the multiple third harmonic voltages which with normal line voltage may be 40% third, 30% ninth, 20% fifteenth, etc.

When the supply is from a grounded source, a path does exist for all harmonics regardless of transformer connection except for the Y-Y-ungrounded connection described in the previous paragraph. The multiple third harm in time phase on the line conductors and return on the neutral system. In the case of Y-grounded-Y-grounded transformers, the thirds may flow on both primary and secondary system. Other harmonics balance out on the line conductors so that only a residual harmonic current resulting from system dissymetry appears on the neutral.

It is the harmonic currents on the neutral system which cause most problems of interference with communication circuits (see 4.4).

Copyright © 1978 IEEE All Rights Reserved

Copyright The Institute of Electrical and Electronics Engineers, Inc.
Provided by IHS under license with IEEE
No reproduction or networking permitted without license from IHS Not for Resale

4.4 Telephone Noise

Harmonic currents flowing on power circuits may cause objectionable noise levels in telephone circuits paralleling the line route. The noise is coupled by induction of longitudinal voltage into both sides of the telephone pair. The currents most likely to produce interference are those which flow on the power system neutral, including single-phase or unbalanced load fundamental-frequency current in grounded-neutral systems. Harmonics which flow on the neutral of 3-phase systems are the triple harmonics. Noise exists where harmonics are unduly heavy, the paralleling of power and telephone lines is both close and long, and where the frequencies are in a sensitive range.

Although equal longitudinal voltages are induced in both sides of the telephone pair, very small series and shunt unbalances in the pair convert some of the induced voltage to currents circulating within the pair. If large enough and a sensitive frequency range, the signal is heard by the telephone user as a noisy hum. Different harmonics have different relative interfering effects because of the frequency response of the telephone circuit and of the human ear, which has greatest sensitivity near 100 Hz. Telephone circuits are designed to suppress the 180-Hz component, but as harmonic frequency increases, less suppression is possible without degrading the signal. Nevertheless, telephone circuit design has made considerable advance in reducing the telephone influence factors associated with frequencies most likely to occur and to interfere. The increased use of shielded cable and, for long communication channels, electronic equipment has also greatly diminished the problem.

Occasionally resonance with grounded-neutral capacitor banks is involved in noise problems. It should always be considered if such banks are near the noisy section.

5. Primary Faults

5.1 Types and Clearing of Faults

Power system faults considered in this section are short circuits or open conductors occurring on the distribution primary system. In either case, some fault independence may exist; that is, the short-circuit fault may have an independence, or the “open” conductor may have an extremely high series impedance.

Short circuits are normally cleared within a few cycles by 3-pole or single-pole protective devices which either sense or are actuated by overcurrent. These devices include circuit breakers, reclosers, sectionalizers, and fuses. They are usually cascaded along radial primary feeders beginning with the supply substation breaker or recloser and coordinated so that the device nearest a permanent fault will open to isolate the faulted section. Coordination schemes provide for upstream breakers and reclosers to clear transient faults without the opening of sectionalizers or blowing of fuses.

Distribution transformers are normally protected on the primary side by single-pole protective devices which usually are fuses. When references are made to fuses in this guide, particularly in Sections 6. and 7., other single-phase devices may be inferred.

Fault protection on the secondary of 3-phase transformers is seldom supplied as part of the transformer. Secondary breakers or fuses or both may be applied for fault protection.

5.2 Ground Faults

The most frequently occurring fault is the single-line-to-ground (SLG) fault, commonly called simply “ground fault.”

Copyright © 1978 IEEE All Rights Reserved

Copyright The Institute of Electrical and Electronics Engineers, Inc.
Provided by IHS under license with IEEE
No reproduction or networking permitted without license from IHS Not for Resale

5.2.1 *Effect on System Conditions*

On a grounded primary system (see 2.1.2), ground fault current is usually of sufficient magnitude to provide positive clearing by protective devices. When fault clearing is by single-phase devices (reclosers, sectionalizers, or fuses), the open-conductor condition becomes a natural consequence of the ground fault, and for purposes of this guide must also be deemed a fault. Double-line-to-ground (DLG) faults will result in two open conductors as is usually true for the phase-to-phase (ø–ø) fault. Open-conductor faults are discussed in 5.3.

On ungrounded primary systems, SLG fault current is so low as to be undetectable, and accordingly the fault is not automatically cleared in most cases. If the ground fault is permanent, the voltage to ground on two phases will equal full line voltage. Because of this voltage rise on the unfaulted phases, not only is the transformer insulation highly stressed, but also surge arrester ratings must necessarily be higher than for grounded systems, thereby affording a lower impulse protective margin to the connected transformers. Therefore, transformers applied on ungrounded systems should be rated for such service.

Ground faults on ungrounded systems may also be of an arcing-fault type in which the arc, perhaps initiated by contact or near contact, builds up sufficient length and voltage to extinguish at a current zero only to restrike a haft-cycle or so later. The resulting discharges of line capacitance may generate quite high steep-fronted voltage surges, with frequencies much higher than power frequency present in the restrikes. Although the risk of a restriking fault, commonly called an arcing fault, is admittedly more serious for low-voltage systems than for the medium-voltage systems of distribution primaries, consideration of the high-voltage surges associated with restriking faults on ungrounded systems reinforces the recommendation that transformers applied on ungrounded systems be rated for such service.

5.2.2 *Grounding Connections*

The connection of the neutral is discussed in 2.6. If the primary source is ungrounded, grounding the primary neutral of Y-Δ, zigzag, and T-connected transformer banks results in grounding of the system, although the degree of system grounding will usually be much less than required for achieving an effectively grounded system. Unless such grounding is done deliberately to provide a ground, perhaps for ground fault detection, and unless adequate provision is made to interrupt the ground fault current contributed from each such ground source, neutral grounding on an ungrounded-source system should be avoided. Good practice limits the use of such neutral-grounded banks to the source substation.

If the primary source is effectively grounded, the grounding of the primary neutral of the Y-Δ, zigzag, and T-connected banks will cause them to furnish a contribution to ground fault current. With the resulting scattered ground sources and with various locations of ground faults required to be considered, the coordination of primary protective devices becomes extremely difficult or impossible.

Furthermore, with unbalanced phase-to-neutral loads on the grounded primary system, these grounded-neutral banks will be subjected to increased load because they will transform power from the two less loaded phases to the third more heavily loaded phase. Therefore, as a result of either ground faults or unbalanced phase-to-neutral loads on the primary system, grounding the primary neutral of Y-Δ, zigzag, and T-connected transformer connections may cause fuse blowing on one leg with resultant single-phasing of the customer served therefrom.

Primary neutral grounding of the cited connections is not recommended. (See also 5.3.2.)

5.3 Open Conductor Faults

Open conductor conditions occur frequently on distribution primary systems. Single-phase protective devices (fuses, sectionalizers, or reclosers) operating to clear faults may open one or two phases leaving the remaining phase or phases energized from the source. Also during switching operations and during the energizing of new installations, a brief

Copyright © 1978 IEEE All Rights Reserved

Copyright The Institute of Electrical and Electronics Engineers, Inc.
Provided by IHS under license with IEEE
No reproduction or networking permitted without license from IHS Not for Resale

period may exist with only one and then two conductors connected directly to the source. For purposes of discussion, these open-conductor conditions will be considered as faults although not necessarily attributable to defects.

5.3.1 *Neutral Inversion and Ferroresonance*

Open-conductor faults on 4-wire grounded primary systems may result in resonances of transformer reactance with shunt capacitance on the transformer side of the fault. The resonance occurs only under conditions of very light load on the transformers affected by the fault and may cause overvoltage, neutral inversion, or ferroresonance. Ferroresonance is of such importance that it is treated separately in Section 7.

Neutral inversion is a steady-state voltage condition such that the system neutral lies outside the triangle formed by the line voltage phasors in a manner to produce reversal of phase rotation. In general, neutral inversions with sinusoidal waveform are not prevalent because the necessary range of capacitance, transformer excitation, and load in which such neutral inversion is possible seldom occurs. Neutral inversion is closely related to ferroresonance, and the circuit conditions which might produce it almost always result in ferroresonance. Therefore, the ferroresonant conditions described in Section 7. in which core saturation effects dominate have a much greater importance.

5.3.2 *Grounding Connections*

Transformer banks which serve as ground sources (see 5.2.2) are particularly vulnerable to open-conductor faults on 4-wire grounded neutral systems. Loads which are connected to the faulted phase or phases on the transformer side of the fault add to the load on the transformer. Quite commonly, the added duty is several times the transformer rating. If unprotected, the transformer will fail thermally. Otherwise, protective devices will operate to disconnect the transformer. Because of the severe overloads possible, the recommendation *not* to ground the Y-Δ, zigzag, and T-connected primary given in 5.2.2 is reinforced.

5.3.3 *Overloads from Single-Phasing*

Regardless of the system grounding or transformer connection, transformer banks supplying large 3-phase motors may be subjected to severe overload because of single-phasing. The open-conductor fault permits the motors to be driven by single-phase power from the source and to generate 3-phase power which not only supplies the transformer load, but is also backfed through the transformer to other primary loads. Usually the motor thermal protection can be depended upon to disconnect it before the transformer is damaged. If not, such transformer banks should have protective devices suitable for overload protection. (See 6.3.2.)

6. Unbalanced Loads and Secondary Ground Faults

6.1 Phase-to-Neutral Loads

Supply of loads connected phase-to-neutral requires a transformer connection capable of providing a neutral. Not only is this provision necessary to stabilize the neutral voltage, but the proper operation of protective devices during secondary ground faults may be dependent on such provision.

To provide a neutral, the secondary winding must have a physical neutral brought out of the tank for connection to the load circuit neutral. Additionally, the transformer connection must provide for flow of zero-sequence current resulting from unbalanced phase-to-neutral load. Otherwise, the neutral of the load circuit will float, and unequal phase-to-neutral voltages will result from the neutral displacement. Lightly loaded phases will have voltage above normal, and heavily loaded phases will suffer low voltage. The connections which are permitted under any conditions are Δ-YG, the T connection which simulates Δ-YG (see 2.4), and the ZZG secondary. If the primary source is 4-wire effectively grounded, then the YG-YG connection may be used, but not otherwise. The Y-YG is unsuitable, and Δ secondaries

Copyright © 1978 IEEE All Rights Reserved

Copyright The Institute of Electrical and Electronics Engineers, Inc.
Provided by IHS under license with IEEE
No reproduction or networking permitted without license from IHS Not for Resale

obviously cannot provide the neutral of 3-phase voltages. However, Δ secondaries can be used to supply 3-wire single-phase loads in addition to 3-phase loads when one leg is midtapped to supply a so-called neutral conductor. (See 8.3.2.)

Each phase-to-neutral load supplied by the Δ-YG or YG-YG, as well as T connections which simulate them (see 2.4), is transformed entirely by the windings of the associated phase. Therefore, the effect of unbalanced load is easily understood and needs no further comment.

6.2 Phase-to-Phase Loads

Loads connected between phase conductors do not require a stabilized neutral and may be supplied from any combination of primary and secondary connections. The effect of load unbalance is most easily explained in terms of one single-phase load. With Y-connected secondaries, a single-phase load involves only the two windings connected to the two line conductors between which the load is connected. Each winding is loaded to 57.7% ($1/\sqrt{3}$) of the total single-phase load as shown in Fig 11A. With Δ-connected secondaries, all three windings are involved. The winding connected to the two load phases supplies $^2/_3$ of the total load, and the other two windings are each loaded to $^1/_3$ the total load as shown in Fig 11B. (If the connection is Δ-Δ, this statement is true only if each phase has the same transformer impedance. See 8.2.)

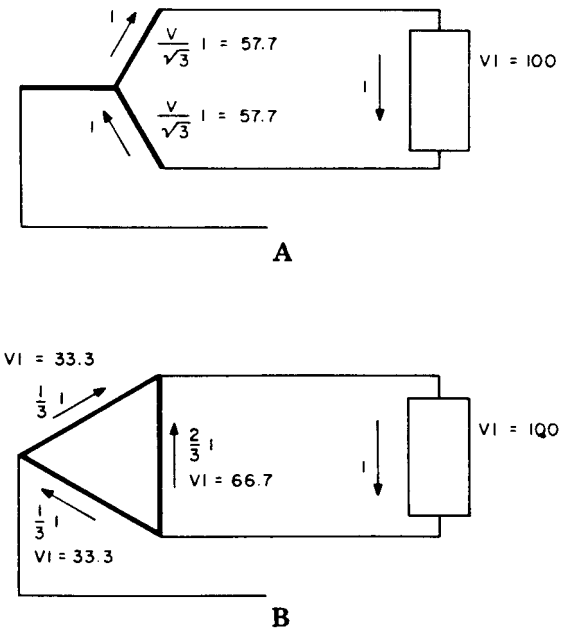

Figure 11— Unbalanced Phase-to-Phase Load Division in Y and Δ Windings

Copyright © 1978 IEEE All Rights Reserved

Copyright The Institute of Electrical and Electronics Engineers, Inc.
Provided by IHS under license with IEEE
No reproduction or networking permitted without license from IHS
Not for Resale

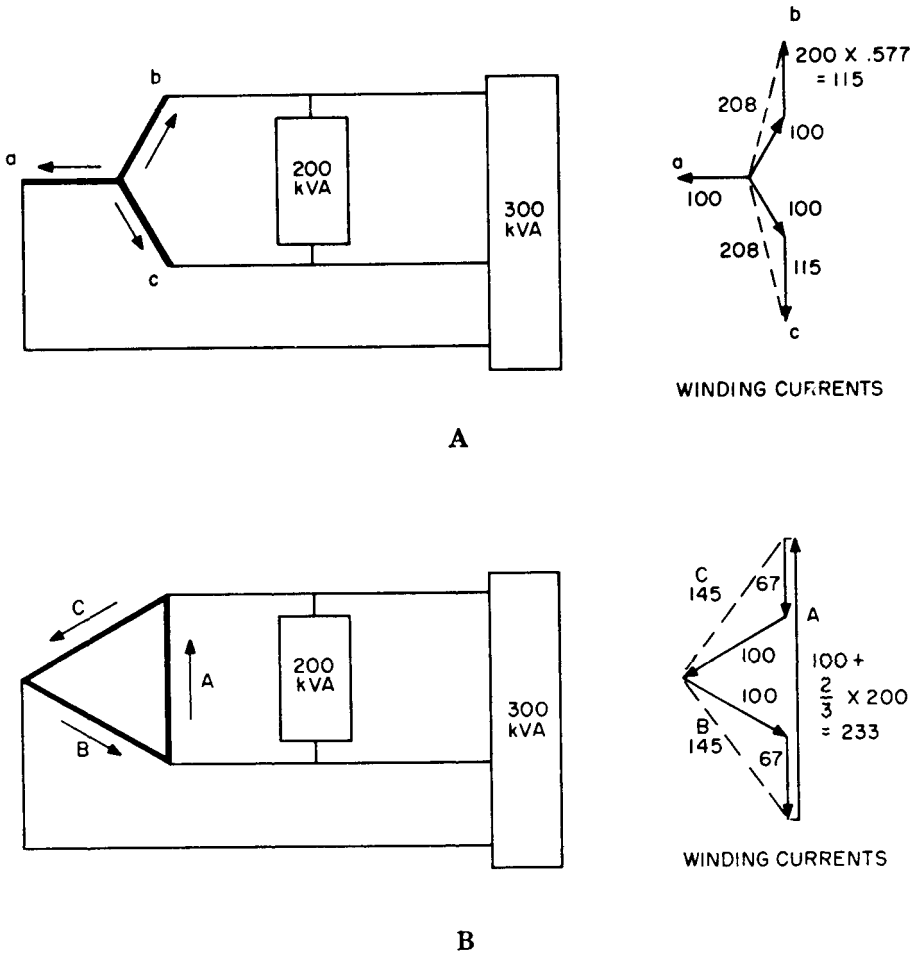

Figure 12— Balanced 3-Phase Load Combined with Phase-to-Phase Unbalanced Load in Y and Δ Windings (Currents Are Expressed in Kilovoltamperes at Terminal Voltage; Load Power Factors Are Equal)

When single-phase and 3-phase loads are combined in Y-connected secondaries, phase difference between these load currents exists even with similar power factors, and simple addition of the two load components, though conservative, is not correct. For Δ-connected secondaries, 3-phase and single-phase components of similar power factor add directly in the most heavily loaded phase. As an example, consider three 167 kVA transformers supply a 500 kVA load, 300 kVA balanced, and 200 kVA single-phase connected phase-to-phase, both of the same power factor. For a Y secondary, the 3-phase load component is 100 kVA in each leg and the single-phase load component is $200/\sqrt{3} = 115$ kVA in two legs. These values add to 215 kVA, but the actual load on the two legs is 208 kVA as seen in Fig 12A. For a Δ secondary, the single-phase load component is $200 \times {}^{2}/_{3} = 133$ kVA in one leg. Simple addition yields 233 kVA which is the actual load as seen in Fig 12B.

The example shows that the Δ secondary is much more affected than the Δ secondary by unbalanced load.

6.3 Secondary Faults

6.3.1 *Tank Heating*

A SLG fault subjects the 3-phase transformer with YG-YG connection and 3-legged core-form construction to severe tank heating. Under normal conditions, the magnetic fluxes in the three core legs have equal maximum values and are

Copyright © 1978 IEEE All Rights Reserved

Copyright The Institute of Electrical and Electronics Engineers, Inc.
Provided by IHS under license with IEEE
No reproduction or networking permitted without license from IHS
Not for Resale

in such time phase that the total net flux entering either end yoke from all three legs is zero (triple harmonics excepted). If the voltages exciting each leg are unbalanced by a neutral shift, then the three fluxes do not add to zero, and the resulting net flux is forced out of the end yokes with a return path from one yoke to the other through air, tank, and core-clamping structures. This net flux may be viewed as the sum of three equal in-phase flux components in the three legs and is commonly called the zero-sequence flux.

Any condition which impresses zero-sequence voltage on a YG-YG transformer with 3-legged core will cause tank fluxes. In order of increasing severity, but without regard to duration, these conditions are unbalanced phase-to-neutral load, unbalanced primary voltages with, neutral shift, SLG primary fault, and SLG secondary fault. During the secondary SLG fault, the short-circuited secondary coil on one leg will not tolerate flux in the faulted leg. Therefore, almost the full magnitude of normal core leg flux is forced out of the yoke into the tank. Severe heating of the tank wall and core clamping parts results from eddy-current and hysteresis losses.

Measures which have been used to counter the tank-heating effect in YG-YG transformers with 3-legged core-form construction are only partly effective and are not economical for small transformers. Placing a heavy conductive belt around the interior of the tank wall to completely enclose the core in a shorted turn restrains the flux from entering the tank wall, but does not prevent the flux from entering the core-clamping structures. Adding a third winding (tertiary) of a substantially lower power rating and connected Δ reduces the zero-sequence exciting flux by reducing the level to which zero-sequence voltage may rise, but does not prevent flux from entering the tank. Also, the tertiary causes the transformer to act as a ground current source with the attendant disadvantages and hazards described in 2.6, 5.2.2, and 5.3.2. For this reason, if a Δ tertiary is employed, the primary-to-tertiary impedance should be low enough to assure that primary protective devices will isolate the transformer under abnormal conditions before thermal damage occurs to the transformer windings.

It is recommended that YG-YG transformers with core-form construction have 4- or 5-legged cores or be of triplex construction.

6.3.2 *Open-Conductor Faults*

When a very substantial part of the load consists of 3-phase induction motors, an open-conductor fault on either primary or secondary may result in serious overload. The motors, if running when the fault occurs, continue to run as single-phase motors unless or until disconnected by motor protection devices. While thus running, the motors draw single-phase power from the unfaulted conductors and transform power to the remaining two phases by furnishing voltage to the faulted conductor. In this manner virtually all of the normal 3-phase load must be supplied through the transformer bank as single-phase power. The condition is obviously one of severe unbalance. The effect of single-phase load is described in 6.2.

6.3.3 *Phase-to-Phase Faults*

Secondary phase-to-phase faults may cause blowing of one or more primary fuses. On systems supplied by Y-Y connections, whether grounded or not, the combination of the blown fuse(s) and a phase-to-phase fault not involving ground may result in full line-to-line primary voltage, appearing across the open fuses. Unless the probability of ungrounded faults is minimal, full-rated primary fuses are recommended for Y-Y connections.

7. Ferroresonance

7.1 Qualitative Description

Ferroresonance is a phenomenon usually characterized by over-voltages and very irregular wave shapes and is associated with the excitation of one or more saturable inductors through capacitance in series with the inductor. In single- and 3-phase power distribution circuits susceptible to ferroresonance, the capacitance usually is due to

 Copyright © 1978 IEEE All Rights Reserved

Copyright The Institute of Electrical and Electronics Engineers, Inc.
Provided by IHS under license with IEEE
No reproduction or networking permitted without license from IHS Not for Resale

presence of shunt capacitor banks, series capacitor banks, cable circuits, overhead lines, and the internal capacitance of transformers and other equipment. The saturable inductor usually is present in the form of a transformer or reactor which utilizes an iron core. Under normal conditions, ferroresonance will not occur in distribution systems, but certain conditions may be established during single-pole switching or the operation of single-pole protective devices which permit ferroresonance to result. The widing connections used for distribution transformer banks are an important factor influencing whether ferroresonance can occur during single-phase conditions.

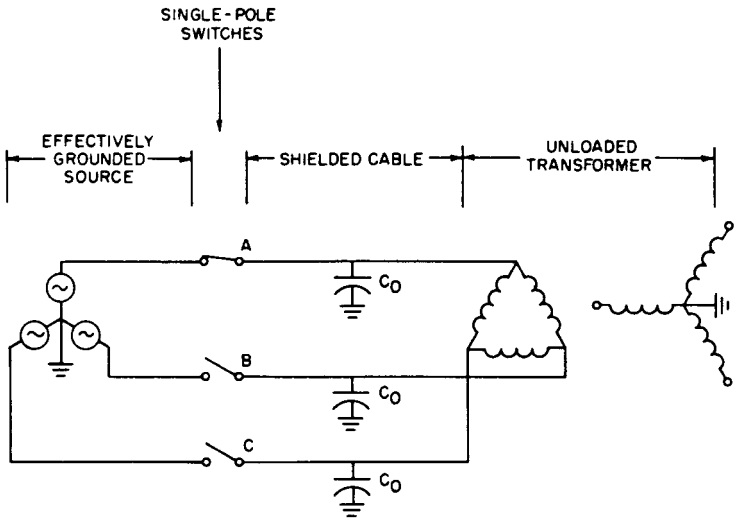

Figure 13— Circuit for Ferroresonance Discussion

When ferroresonance is present in a distribution system, it usually causes one or more of the following abnormalities which are easily measured or observed:

1) High voltage phase-to-phase, phase-to-ground, or both with peak voltages which may be five or more times the system normal peak voltage
2) Extremely jagged and irregular voltage and current wave shapes
3) Excessively loud noise in the transformer due primarily to magnetostriction at high flux densities. Frequently the transformer is described as rattling, rumbling, or whining when ferroresonance is present. These noises are considerably different from those which emanate from the transformer when excited from a sinusoidal source at rated voltage and frequency.

The simple 3-phase circuit of Fig 13 will be used to discuss how ferroresonance can occur. A 3-phase effectively grounded source supplies single-conductor shielded cables through three single-pole switches. This type of cable has capacitance from phase to ground C_0, but phase-to-phase capacitance essentially is not present. At the end of the cable circuit is an unloaded 3-phase transformer bank with the primary windings connected in Δ. When the single-pole switch for phase A is closed as shown in Fig 13, two phases of the transformer are energized by a path through the cable capacitances from phases B and C to ground. At the instant the switch in phase A is closed, the capacitance to ground on phases B and C appears as a short circuit, and the transformer windings of legs A-B and A-C start to draw normal inrush or exciting current. The transformer iron during the first cycle of applied voltage may saturate due to closing at or near voltage zero, or due to residual flux in the transformer core or both. Saturation results in a large current pulse through the transformer windings and capacitances of phases B and C. Next the transformer iron drops out of saturation leaving a substantial trapped charge (voltage) on the cable capacitance. In subsequent cycles the transformer iron may go into saturation in the opposite direction, thereby changing the polarity of the trapped charge on the capacitance. If the transformer continues to go into and out of saturation in either a cyclical or random fashion, high sustained overvoltages will occur phase-to-phase and phase-to-ground. These sustained overvoltages can cause over-excitation of the transformer, surge attester failure, and even failure of major insulation in the transformer or

Copyright © 1978 IEEE All Rights Reserved

Copyright The Institute of Electrical and Electronics Engineers, Inc.
Provided by IHS under license with IEEE
No reproduction or networking permitted without license from IHS
Not for Resale

system. When the second phase in Fig 13 is closed, the overvoltages may persist or become higher. Closing the third phase restores balanced 3-phase conditions, and ferroresonance will terminate.

A distribution system should be designed and operated so that ferroresonance is unable or very unlikely to occur during single-phase conditions. For a given system and method of operation, the transformer connections and switching arrangements should be selected so that the probability of ferroresonance and the resultant overvoltages is minimized.

7.2 Transformer Connections Highly Susceptible to Ferroresonance

Transformer banks with certain connections are more likely than others to experience ferroresonance when the bank is energized or de-energized with single-pole switches at a location remote from the transformer, or when a conductor or fuse at a remote location opens. In general, ferroresonance is possible if the primary windings of the transformer bank are not grounded, phase-to-phase or phase-to-ground capacitance or both is present between the single-pole switches or fuses and transformer, and the supply system is effectively grounded (3-phase 4-wire). Table 2 shows frequently employed transformer connections which are susceptible to ferroresonance during normal and abnormal single-phase conditions.

Whether ferroresonance will occur with the transformer connections shown in Table 2 depends on the system and transformer electrical characteristics. For a particular transfomer connection, the phase-to-phase and phase-to-ground capacitances of the lateral circuit plus the transformer internal capacitance are the parameters which have the most effect on the establishment of sustained ferroresonance during single-phase conditions. For a particular connection sustained ferroresonance will occur only if the capacitances of the lateral circuit and transformer fall within a given range. The upper and lower bounds on this capacitance range are determined mainly by the primary voltage level, transformer size, and to some extent the transformer design. The lower bound is of most interest, and for a given primary voltage level the lower bound of the range decreases as the transformer size decreases. For a given transformer size, the lower bound of the range decreases as the primary voltage level increases. Therefore, ferroresonance is more likely with higher primary voltage in smaller transformers.

The type of construction used for the lateral circuit between the transformer and single-pole devices determines the capacitance and thus is the factor which has the greatest influence on the establishment of a potential ferroresonant circuit. This 3-phase lateral circuit usually consists of overhead line (open wire) or single-conductor shielded cables. The capacitance to ground of cable may be 50 or more times that of overhead line, and this fact greatly increases the probability that the capacitances will be above the lower bound of the range at which ferroresonance can occur with the connections in Table 2.

Copyright © 1978 IEEE All Rights Reserved

Copyright The Institute of Electrical and Electronics Engineers, Inc.
Provided by IHS under license with IEEE
No reproduction or networking permitted without license from IHS Not for Resale

Table 2— Connections Susceptible to Ferroresonance

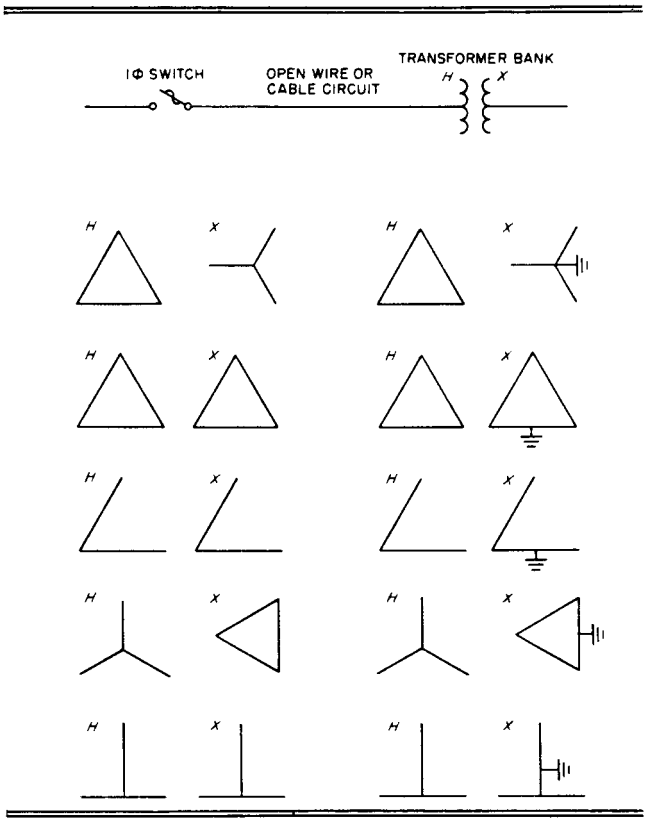

For the connections shown in Table 2, ferroresonance usually does not occur if the primary voltage is 15 kV or lower and the lateral circuit' is overhead line (open wire) provided the length of line between the single-pole devices and transformer bank does not exceed ordinary lengths. Relatively few cases of ferroresonance have been reported for these conditions because either the line lengths involved are relatively short or the switching and fusing is performed at the transformer location. However, in 25 kV and particularly in 35 kV multigrounded neutral overhead systems ferroresonance is more likely with the connections shown in Table 2. In fact, ferroresonance with overvoltages as high as 4 to 5 per unit has been observed when energizing, at the transformer terminals, ungrounded-Y-Δ banks employing small single-phase transformers. This is due to nonlinear resonance between the internal capacitance of the transformer and the transformers' exciting impedance.

For the connections shown in Table 2, ferroresonance is also likely if the primary voltage is 12 kV or higher (effectively grounded system) and the lateral circuit is single-conductor shielded cable or 3-conductor shielded cable. The chance of occurrence is increased as primary voltage is increased, cable length is increased, and transformer size is reduced. Ferroresonance also can occur for primary voltages below 12 kV when single-conductor shielded cable is used to connect the single-pole switches or fuses to the transformer. However, the experience in the utility industry has shown that ferroresonance is not as likely at the lower voltages (4160 Y and 8320 Y) as at the higher voltages.

Various technical papers have defined the maximum lateral cable lengths which can be used with different sizes of transformers and different primary voltage levels for the connections shown in Table 2, if ferroresonance is to be prevented. A comparison of the data in the various papers shows that the maximum cable lengths, for the same primary voltage and transformer size, vary considerably. This guide does not attempt to arbitrate the differences and arrive at industry acceptable values for maximum allowable cable lengths. It is generally agreed, however, that the allowed cable lengths are relatively short for the transformer connections shown in Table 2, particularly for system voltages of 12 kV and higher. Nevertheless, considering the trend of placing more distribution circuits underground, with resultant

Copyright © 1978 IEEE All Rights Reserved

Copyright The Institute of Electrical and Electronics Engineers, Inc.
Provided by IHS under license with IEEE
No reproduction or networking permitted without license from IHS
Not for Resale

increase of the distance between single-pole devices and transformer, reliance upon limiting cable length to prevent ferroresonance with the connections in Table 2 is unreasonable.

7.3 Measures to Minimize the Probability of Ferroresonance with Ungrounded Primary Connection

As discussed in 7.2, ferroresonance is quite likely with the connections in Table 2 if the bank is supplied through single-conductor shielded cables with single-pole devices at the source end of the cables. Although the trend in the utility industry is away from the connections shown in Table 2 (for padmounted and submersible banks, supplied through cable circuits), measures are available which will minimize the probability of ferroresonance if these connections are used.

7.3.1 *3-Pole Switches and Fault Interrupters*

The use of properly adjusted 3-pole switches and fault interrupters at the source end of the cable circuit will prevent single-phasing during switching and fault conditions and consequently will prevent sustained ferroresonance. However, this is a costly solution which most utilities reject from an economic standpoint. A similar solution is to use only a 3-pole switch at the remote location and fuses only at the transformer location. This is a workable solution, but it has the drawback of causing a line lockout for faults on the cable circuit. Fortunately, the compromise of a 3-pole switch and fuses at the source end of the cable will greatly reduce the probability of ferroresonance when the primary windings are not grounded. Sustained ferroresonance will not occur during switching operations by virtue of the 3-pole switch. If a fuse blows due to a fault on the cable, the capacitance to ground on the open phase is shunted by the impedance in the fault path, and ferroresonance would not be expected. But if a fuse or conductor in the primary circuit causes an open circuit in the absence of a shunt fault, and the transformer is unloaded, ferroresonance can occur.

Fortunately, when a fuse or conductor opens, the load connected to the secondary of the transformer usually is sufficient to prevent sustained ferroresonance. However, if all of the connected secondary load is fed through a breaker or breakers which have undervoltage tripping, then the total secondary load may be disconnected during an open circuit on the primary, and ferroresonance may occur.

7.3.2 *Secondary Load*

If sufficient load is connected to the secondary of the transformer bank, sustained ferroresonance will not occur during single-phase conditions. The amount of load required depends primarily on transformer kVA rating, primary voltage, cable length, transformer connections, and load characteristics including energy absorbing characteristics. Generally, decreasing the transformer size, increasing primary voltage, and increasing cable length requires increasing the load in order to prevent ferroresonance. Tests and model studies have shown that almost always a high power factor resistive load (one whose inductance is due to stray flux linkages and not by intentional design) equal to 10% of transformer nameplate rating will prevent ferroresonance, and in many cases the resistive load can be considerably less than 10% depending upon the parameters mentioned above. Reliance upon sufficient user connected secondary load to prevent ferroresonance during single-pole switching is not considered acceptable practice by many system operators since secondary load frequently is disconnected during the switching.

7.3.3 *Switching at the Transformer*

As discussed in 7.2, performance of the single-pole switching at the transformer location generally will not result in ferroresonance except when small banks of three singe-phase transformers in 25 and 35 kV distribution systems are energized or de-energized. On 15, 25, and 35 kV systems, ferroresonance generally is not a problem when the single-pole switching is performed at the 3-phase padmounted or subsurface transformers because of the size of the transformers normally involved (150 kVA and above).

Copyright © 1978 IEEE All Rights Reserved

Copyright The Institute of Electrical and Electronics Engineers, Inc.
Provided by IHS under license with IEEE
No reproduction or networking permitted without license from IHS Not for Resale

7.3.4 *Resistance Grounding of Y-Connected Primary*

When the neutral of the primary in a Y–Δ bank is grounded through a resistor, ferroresonance can be avoided. This potential solution may establish conflicting constraints in that a resistor must be selected which is low enough to prevent the ferroresonance, yet high enough to prevent the bank from acting as a low-impedance ground-current source. Furthermore, the design of the installation must include adequate protective barriers or warnings to prevent human contact witch the neutral point of the primary windings. For the reasons discussed in 2.6, 5.2.2, and 5.3.2, solid grounding of the Y with this connection is not recommended even though grounding would either prevent ferroresonance or minimize its probability.

7.4 Transformer Connections Least Susceptible to Ferroresonance

Table 3 shows two transformer connections which, under certain system conditions, will prevent ferroresonance. The open-Y–open-Δ connections will prevent ferroresonance when the single-pole switches are at the source end of the lateral circuit if all lateral circuit capacitance is from phase to ground. In most underground distribution circuits today, single-conductor shielded cables

are used, and these do have all capacitance from phase to ground. The open-Y–open-Δ connection is made with either external connection of two single-phase transformers, or by placing two single-phase core-coil assemblies in a common tank. In either case, the two primary windings are not coupled magnetically, the three phases of the lateral circuit are not coupled capacitively, and ferroresonance will not occur. However, if the circuit between the single-pole switches and open-Y–open-Δ bank has phase-to-phase capacitance as with open wire, ferroresonance can occur. Fortunately, the length of open-wire lateral necessary to permit ferroresonance is much longer than is normally employed. For practical purposes, the open-Y–open-Δ connection can be considered free from ferroresonance.

Table 3— Connections Which Prevent or are Least Susceptible to Ferroresonance

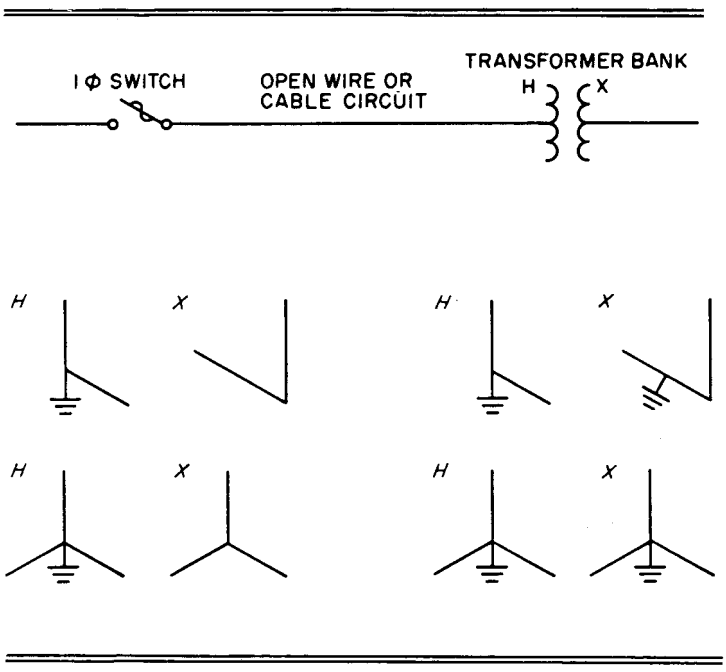

Usually underground systems have single-conductor shielded cable for which all circuit capacitance is phase to ground. When this is the case, ferroresonance will not occur with the grounded-Y–grounded-Y connection during remote single-pole switching provided the bank consists of three single-phase transformers or a 3-phase unit with

Copyright © 1978 IEEE All Rights Reserved

Copyright The Institute of Electrical and Electronics Engineers, Inc.
Provided by IHS under license with IEEE
No reproduction or networking permitted without license from IHS
Not for Resale

triplex construction (three single-phase core-coil assemblies in the same tank). If the grounded-Y–grounded-Y transformer is supplied through open-wire circuits where phase-to-phase capacitance is also present, ferroresonance can occur whether or not the bank consists of three single-phase units or is a triplex 3-phase unit. However, the length of line necessary to permit ferroresonance under these conditions (over two miles) is usually greater than that which exists between the single-pole devices and the transformers. But it should be recognized that if an ungrounded-Y or Δ capacitor bank exists between the single-pole devices and transformer, ferroresonance can result. For situations where capacitor banks do not exist between the switches and transformer, the grounded-Y–grounded-Y bank made from three single-phase transformers or a 3-phase unit with triplex construction can be considered free from ferroresonance.

Most 3-phase padmounted and submersible transformers with the grounded-Y-grounded-Y winding connections do not employ triplex construction, but they are constructed on a 4- or 5-legged core. This method is used since generally it results in lower coat, weight, and size for the 3-phase transformers. Also these transformers are usually fed through primary circuits consisting of single-conductor shielded cable, and frequently the single-pole switches or fuses are at the source end of the cable circuit. Tests and field experience have shown that ferroresonance can occur with 4- or 5-legged core-form grounded-Y–grounded-Y transformers when supplied through single-conductor shielded cables. The limited test data show that crest voltages as high as 2.35 per unit may occur, but usually they are considerably less than this. Also the available data show that the length of cable which can be used with grounded-Y–grounded-Y transformers is considerably longer than that which can be used with ungrounded primary winding connections without increasing the probability of high overvoltages and ferroresonance. This fact its evidenced by the generally good experiences which utilities have had with transformers employing this type of construction.

7.5 Measures to Minimize the Probability of Ferroresonance with Grounded Primary Connections

As discussed in 7.4, there are only two winding connections where ferroresonance definitely will not occur, providing all capacitance of the primary system between the single-pole devices and transformer is from phase to ground. These connections are the open-Y–open-Δ and grounded-Y–grounded-Y connections made up of either single-phase transformers or a 3-phase triplex unit. If the primary circuit has phase-to-phase capacitance or if the grounded-Y–grounded-Y bank is constructed on a 4- or 5-legged core, ferroresonance can occur. For most systems, the probability of ferroresonance due to the presence of phase-to-phase capacitance in open-wire lines is infinitesimal. However, when 4-or 5-legged core-form grounded-Y–grounded-Y transformers are supplied through circuits where all circuit capacitance is from phase to ground, ferroresonance can occur. Fortunately, the resultant overvoltages should not prove harmful to the transformer or other primary equipment for the time they are present during normal single-pole switching operations. Measures are available, however, to minimize the probability of overvoltages and ferroresonance when the primary windings are grounded.

7.5.1 *3-Pole Switches and Fault Interrupters*

The application of properly adjusted 3-pole switches and fault interrupters at the source end of the supply circuit will prevent sustained overvoltages and ferroresonance, but generally is not an acceptable solution from an economic standpoint. The preventative measures outlined in 7.3.1 also can be used with the open-Y-open-Δ, and grounded-Y–grounded-Y connections if conditions are such that ferroresonance is possible.

7.5.2 *Secondary Load*

Connecting sufficient load to the secondary of the open-Y–open-Δ, and grounded-Y–grounded-Y transformers will prevent overvoltages. Usually a resistive load of 10% of bank rating will prevent overvoltage, and in many cases the load can be considerably less than 10% depending upon cable or lateral circuit length, primary voltage, transformer size, and load characteristics.

Copyright © 1978 IEEE All Rights Reserved

Copyright The Institute of Electrical and Electronics Engineers, Inc.
Provided by IHS under license with IEEE
No reproduction or networking permitted without license from IHS Not for Resale

7.5.3 *Switching at the Transformer*

If the single-pole switching and fusing devices are located at the transformer, and the neutral of the primary windings is grounded, overvoltages and ferroresonance will not occur with either the open-Y-open-Δ or grounded-Y-grounded–Y connections.

7.6 Bibliography

The qualitative guides presented in this section will not suffice for those who desire quantitative information and a more complete and thorough understanding of the basic phenomenon. For these reasons a bibliography is included as part of this guide and appears in Section 9.

8. Unsymmetrical Banks and Special Connections

Symmetrical transformer banks are those in which each phase has similar kVA rating, impedance, and voltage ratio. The 3-phase transformers and banks of three similar single-phase transformers connected in Y, Δ, or zigzag are symmetrical connections.

8.1 T-Connected

The T-connected 3-phase transformer is not a symmetrical connection. Its characteristics are described in 2.4. Although a T connection is theoretically possible with two single-phase transformers, standard voltage ratings do not permit such a connection to have practical significance. The use of the T connection between 2-phase and 3-phase systems (Scott connection) is beyond the scope of this guide. Therefore, the T connection will not be further discussed.

8.2 Circulating Delta Currents

8.2.1 *Dissymmetry of Voltage Ratios*

In Δ–Δ transformer connections, a large circulating current may flow due to dissymmetry of the voltage ratios of the three phases. Fig 14 shows an energized Δ-Δ bank with the secondary open at one corner and a voltmeter inserted. The voltage across the open terminals reversed in phase may be considered an emf which drives current around the closed Δ through the impedances of the three legs in series. If, for example, 1.5% of line voltage were measured at the open corner of three otherwise similar transformers having 5% impedance, the circulating current in the Δ windings would be $1.5 \div (5 \times 3) \times 100 = 10\%$ of transformer rated current. No matter what the time phase of this current with respect to load current, at least half and possibly all will add directly in phase with load current in one leg of the Δ. (This statement assumes load currents disposed at 120° intervals, but not necessarily otherwise balanced.) Transformer losses are significantly increased, and the circulating current may cause overload. The severity of the additional heating with balanced load may be estimated by a simple equation. With K standing for the ratio of circulating current to rated current, p standing for the ratio of load current to rated current, and θ standing for the angle between the two currents, the load losses of the most-affected leg in per unit of full-load value are given by $p^2 + 2pk \cos \theta + k^2$. For example, if the circulating current is 10% of rated and the load is 100%, the load loss in the most-affected leg ranges from 111% to 121% of normal full-load value as the angle θ changes from 60° to 0°.

Although the condition of circulating current is not easily detectable in the excitation current of an unloaded bank, it is apparent in the no-load losses. The easiest method to check for abnormal circulating current in a bank of single-phase units is, of course, to use an ammeter in the Δ with the load disconnected.

The circulating current may also occur with the little-used YG–Δ connection, but source zero-sequence impedance as well as transformer impedance is presented in series to the driving voltage because the currents must circulate through

Copyright © 1978 IEEE All Rights Reserved

Copyright The Institute of Electrical and Electronics Engineers, Inc.
Provided by IHS under license with IEEE
No reproduction or networking permitted without license from IHS Not for Resale

the source neutral on the primary side. Depending upon bank size and location, the circulating current may be much less than for the Δ–Δ connection with otherwise similar conditions.

8.2.2 *Assymmetry of Impedances*

When the three legs of a Δ–Δ bank have different impedances (either ohmic or referred to a common kVA base), the currents within the Δ are not balanced even through the external currents are balanced. The assymmetry of the impedances may be explained or calculated in terms of an emf which gives rise to a circulating current superimposed on the load current, First, a current distribution in the Δ is assumed; for example, if the load is balanced, balanced currents are assumed. Second, the phasor voltage drops in each leg are calculated and added to obtain a residual voltage similar in character to the open-corner voltage caused by dissymmetry of voltage ratios. Third, this voltage reversed in phase is treated as an emf which causes a circulating current superimposed on the assumed Δ currents. The circulating current is calculated as in 8.2.1 by dividing the emf by the sum of impedances of the three legs. The, equation given in 8.2.1 for estimating the severity of the additional heating attributable to the circulating current applies if the load is balanced or nearly so.

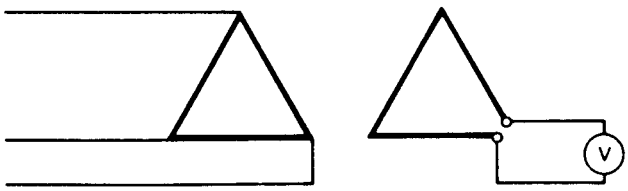

Figure 14— Open-Corner Voltage of Δ–Δ Connection

8.3 Grounded Delta Secondary

8.3.1 *Corner Grounded*

In a 3-wire low-voltage system supplied from a Δ secondary, the advantages of grounding may be obtained by grounding one secondary line lead, a procedure which grounds one corner of the Δ as shown in Fig 15A. The bank may otherwise be symmetrical.

8.3.2 *Midphase Grounded*

In order to provide both 3-wire single-phase and 3-phase low-voltage service from one transformer bank, the mid tap of one phase of the Δ may be grounded as shown in Fig 15B. When three single-phase units are used, the grounded transformer, often called the lighting transformer, is usually larger than the other two units. In this case, secondary circuit breakers should not be used with this connection because opening of these breakers in the lighting transformer causes the midphase ground to become unstabilized with respect to the phase-to-phase voltage. The single-phase load continues to be serviced by the open Δ, but the voltage to ground may be excessively high on one side and low on the other as a result of load imbalance.

The load division among the legs of the Δ depends upon the primary connection. If the primary is connected ungrounded Y, 3-phase load divides equally between the legs, and the single-phase load connected to the lighting by that transformer terminals is supplied $^{2}/_{3}$ by that transformer and $^{1}/_{3}$ by the other two. A conservative rule is to size the Lighting trans former to carry all of the single-phase load (to allow for single-phase load unbalance plus) $^{1}/_{3}$ of the balanced 3-phase load. The remaining two transformers are each sized for $^{1}/_{3}$ the 1 balanced 3-phase load plus $^{1}/_{3}$ of the single-phase load. This rule does not recognize the phasor relation of the 3-phase and single-phase loads.

When the primary is also Δ, the load division may be determined by the method described in 8.2.2. A shorter calculation based on that method assumes that two of the transformers have equal impedances. With the impedance (ohmic or on common kVA base) of the lighting transformer represented by *L* and the impedance of each of the other

Copyright © 1978 IEEE All Rights Reserved

Copyright The Institute of Electrical and Electronics Engineers, Inc.
Provided by IHS under license with IEEE
No reproduction or networking permitted without license from IHS Not for Resale

two transformers by *P*, the proportion of 3-phase load carried by lighting transformer is $P/(2P+L)$. The remainder is divided equally between the other two transformers. The single-phase load divides so that the proportion carried by the lighting transformer is $2P/(2P+L)$. The other two units each carry, the full remainder which. is $L/(2P+L)$.

For example, assume a Δ-Δ bank consisting of a 15 kVA lighting transformer with 3.6% impedance and two 5 kVA transformers with 3.2% impedance. Each impedance is converted to a 1 kVA base by merely dividing the transformer kVA rating into its percent impedance, yielding 0.24% for the lighting transformer and 0.65% for the other two. Then $2P+L = 1.52$ = the sum of all three impedances. The proportion of load carried by the lighting transformer, then, is $0.64/1.52 = 0.421$ for 3-phase and $2 \times 0.421 = 0.841$ for single-phase load, or about 42% and 84%; respectively. The other two units must each carry half the remaining 3-phase and all of the remaining single-phase load, or about 29% and 16%, respectively. It is conservative to add the 3-phase and single-phase loads arithmetically.



Figure 15— Grounded Δ Secondaries
A—Corner Grounded, B—Midphase Grounded

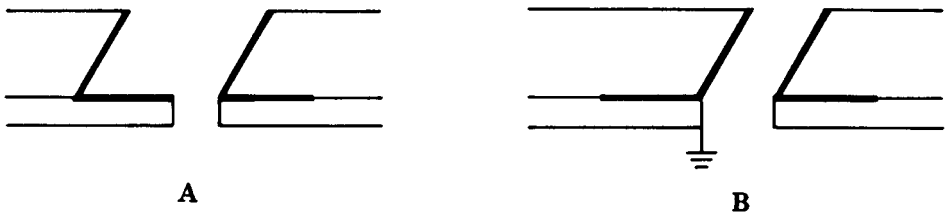

Figure 16— Open-Δ Secondaries
A—Open-Δ Primary, B—Open-Y Primary

Copyright © 1978 IEEE All Rights Reserved

Copyright The Institute of Electrical and Electronics Engineers, Inc.
Provided by IHS under license with IEEE
No reproduction or networking permitted without license from IHS
Not for Resale

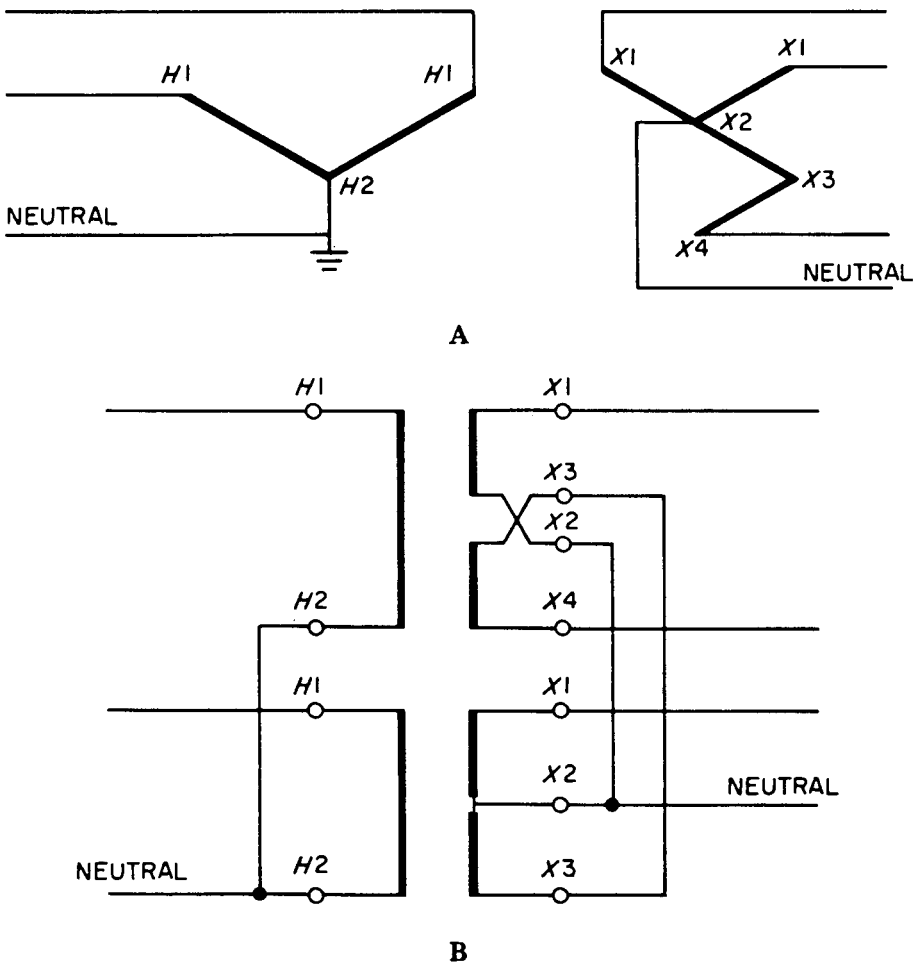

Figure 17— Open-Y Primary to 4-Wire Secondary
A—Quasi-Phasor Diagram,
B—Connection Diagram

Care must also be taken when the primary is Δ-connected to consider the possibility of circulating currents arising from voltage dissymmetry as described in 8.2.1.

8.4 Open-Δ Secondary

The single-phase transformers may be connected to provide 3-phase 3-wire service. The connection is essentially a Δ connection with one leg removed. The primary may be either open-Δ as in Figure 16A or open-Y as in Fig 16B, the latter requiring a grounded-Y primary system. Three-phase transformers of this connection have been built in a single tank as duplex units.

For balanced 3-phase load, the total transformer kilovoltampere requirement is $2/\sqrt{3} = 1.154$ times that required for closed Δ operation. Secondary grounding described in 8.3 is permissible, and with a grounded mid-tap on the secondary phase as described in 8.3.2, the lighting transformer should be sized to carry $1/\sqrt{3} = 0.577$ times the balanced 3-phase load plus the single-phase load. It is conservative to add these two load components arithmetically when sizing the lighting transformer.

Copyright © 1978 IEEE All Rights Reserved

Copyright The Institute of Electrical and Electronics Engineers, Inc.
Provided by IHS under license with IEEE
No reproduction or networking permitted without license from IHS
Not for Resale

8.5 Open-Y primary to 4-Wire 208 V Service

If a 4-wire 3-phase 208 V service must be installed and only an open-Y primary is available, and the expense of adding the third-phase conductor is considerable, resort may be had to a connection of two single-phase transformers with dual-voltage secondaries. At, least, one transformer must have four secondary bushings, that, is, the secondary voltage rating must be 120/240 V. The other transformer may be a 3-bushing transformer rated 240/120 V. The connection is made as shown in Fig 17. Each single-phase transformer must be sized for $^{2}/_{3}$ of the balanced 3-phase load.

8.6 Effect on Voltage Balance

Just as unbalanced currents flowing in symmetrical banks produce voltage unbalance, so do balanced currents flowing in unsymmetrical banks. The combined effect of unbalanced currents and unsymmetrical banks is too complex for any but the most general remarks.

If balanced primary voltage is supplied, and if the regulation of the individual transformers is satisfactory for the load, voltage unbalance should not be a problem. A relatively large 3-phase induction motor load tends to aid in maintaining voltage balance.

9. References and Bibliography

9.1 General

[1] *Electrical Transmission and Distribution Reference Book*. East Pittsburgh, PA: Westinghouse Electric Corporation, 1950, 4th ed, ch 5.

[2] HILL, L. H. *Transformers*. Scranton, PA: International Textbook Company, 1937.

[3] BLUME, L. F., and BOYAJIAN, A. *Transformer Connections*. Schenectady, NY: General Electric Company, 1951.

[4] BLUME, L. F., BOYAJIAN, A., CAMILLI, G., LENNOX, T. C., MINNECI, S., and MONTSINGER, V. M. *Transformer Engineering*. New York: Wiley, 1951.

[5] BEAN, R. L., CHACKAN, N., JR, MOORE, H. R., and WENTZ, E. C. *Transformers for the Electric Power Industry*. East Pittsburgh, PA: Westinghouse Electric Corporation, 1959.

[6] Members of the Staff of the Department of Electrical Engineering, Massachusetts Institute of Technology. *Magnetic circuits and Transformers*. New York: Wiley, 1943.

[7] STIGANT, S. A., and FRANKLIN, A. C. *The J & P Transformer Book*. New York: Wiley, 1973.

9.2 Ferroresonance

[8] HENDRICKSON, P. E., JOHNSON, I. B., and SCHULTZ, N. R. Abnormal Voltage Conditions Produced by Open Conductors on 3-Phase Circuits Using Shunt Capacitors. *AIEE Transactions (Power Apparatus and Systems)*, vol 72, pp 1183-1193, Dec 1953.

[9] AUER, G. G., and SCHULTZ, A. J. An Analysis of 14.4/24.9 kV Grounded-Y Distribution System Overvoltages. *AIEE Transactions (Power Apparatus and Systems)*, vol 73, pp 1027-1032, Aug 1954.

Copyright © 1978 IEEE All Rights Reserved

Copyright The Institute of Electrical and Electronics Engineers, Inc.
Provided by IHS under license with IEEE
No reproduction or networking permitted without license from IHS Not for Resale

[10] SCHMID, R. L. An Analysis and Results of Ferroresonance. *Transmission and Distribution*, pp 114-117, Oct 1969.

[11] HARLOW, J. H., KILGOUR, A. E., and PHADKE, A. G. Analyzing and Understanding Ferroresonance on Distribution Systems. *Transmission and Distribution*, pp 82-87, June 1968.

[12] CLARKE, E. Circuit Analysis of AC Power Systems, vol. II. New York: Wiley, 1950, ch 5.

[13] FINGER, G. T. Ferroresonance, presented before the Engineering and Operation Section of the Southeastern Electric Exchange, Biloxi MS, Apr 8-9, 1965.

[14] KELLY, G. E. The Ferroresonant Circuit. *AIEE Transactions (Communication and Electronics)*, vol 77, pp 843-848, Jan 1959.

[15] SCHULTZ, R. A. Ferroresonance in Distribution Transformer Banks on 19.8/34.5 kV Systems, presented at the Rocky Mountain Electrical League Conference, Apr 24, 1964.

[16] HOPKINSON, R. H. Ferroresonance During Single-Phase Switching of 3-Phase Distribution Transformer Banks. *IEEE Transactions on Power Apparatus and Systems*, vol PAS-84, pp 289-293, Apr 1965; Discussion. IEEE Transactions on Power Apparatus and Systems, vol PAS-84, pp 514-517, Jun 1965.

[17] HOPKINSON, R. H. Ferroresonance and the Grounded Y-Y Transformer, presented at the Electrical Meter School conducted by North Carolina State University at Wilmington College, NC, Jun 7-10, 1965.

[18] TURLEY, S. Q. Ferroresonance Oversimplified. *Transmission and Distribution*, pp 36-40, Oct 1966.

[19] HOPKINSON, R. H. Ferroresonant Over-voltage Control Based on TNA Tests on Three-Phase Δ-Y Transformer Banks. *IEEE Transactions on Power Apparatus and Systems*, vol PAS-86, pp 1258-1265, Oct 1967.

[20] HOPKINSON, R. H. Ferroresonant Over-voltage Control Based on TNA Tests on Three-Phase Y-Δ Transformer Banks. *IEEE Transactions on Power Apparatus and Systems*, vol PAS-87, pp 352-361, Feb 1968.

[21] KRESSER, J. V. Ferroresonance Phenomena in Distribution Transformers, presented at the PCEA Engineering and Operating Conference, Los Angeles, CA, Mar 18-19, 1965.

[22] KRATZ, E. F., MANNING, L. W., and MAXWELL, M. Ferroresonance in Series Capacitor-Distribution Transformer Applications. *AIEE Transactions (Power Apparatus and Systems)*, vol 78, pp 438-449, Aug 1959.

[23] YOUNG, F. S., SCHMID, R. L., and FERGESTAD, P. I. A Laboratory Investigation of Ferroresonance in Cable-Connected Transformers. *IEEE Transactions on Power Apparatus and Systems*, vol PAS-87, pp 1240-1249, May 1968.

[24] CRANN, L. B. and FLICKINGER, R. B. Overvoltages on 14.4/24.9-kV Rural Distribution Systems. *AIEE Transactions (Power Apparatus and Systems)*, vol 73, pp 1208-1212, Oct 1954.

[25] STOELTING, H. O. A Practical Approach to Ferroresonance as Established by Tests, presented at the Pacific Coast Electric Association Engineering and Operating Meeting, Mar 4, 1966.

[26] FERGUSON, J. S. A Practical Look at Ferroresonance, presented at the Engineering Conference of the Missouri Valley Electric Association, Kansas City, MO, Apr 17-19, 1968.

[27] BATES, W. H., Series Capacitors Successfully Applied on Distribution Systems. *Transmission and Distribution*, pp 90-95, Oct 1968.

 Copyright © 1978 IEEE All Rights Reserved

Copyright The Institute of Electrical and Electronics Engineers, Inc.
Provided by IHS under license with IEEE
No reproduction or networking permitted without license from IHS Not for Resale

[28] VANWORMER, F. C. Switching Three-Phase Distribution Transformer Banks and Related Problems, presented at the Southeastern Electric Exchange Engineering and Operation Section, Miami Beach, FL, Oct 21, 1965.

[29] RUDENBERG, R. *Transient Performance of Electric Power Systems.* New York: McGraw-Hill, 1950, ch 48.

[30] PETERSON, H. A. *Transients in Power Systems.* New York: Wiley, 1951, ch 9.

[31] SALIHI, J. T. Theory of Ferroresonance. *AIEE Transactions (Communication and Electronics),* vol 78, pp 755-763, Jan 1960.

[32] SMITH, D. R., SWANSON, S. R., and BORST, J. D. Overvoltages with Remotely Switched Cable-Fed Grounded Y-Y Transformers. *IEEE Transactions on Power Apparatus and Systems,* vol PAS-94, pp 1843-1853, Sep/Oct 1975.

9.3 Special Connections

[33] LEWIS, H. S. Two Phases Can Supply 4-Wire 120/208 V. *Electrical World,* p 95, Nov 18, 1957; Discussion, *Electrical World,* p 124, Dec 16, 1957.

[34] MCKEE, L. T. Three-Phase and Single-Phase from One Transformer Bank. *Transmission and Distribution,* p 56, Aug 1973.

Copyright © 1978 IEEE All Rights Reserved

Copyright The Institute of Electrical and Electronics Engineers, Inc.
Provided by IHS under license with IEEE
No reproduction or networking permitted without license from IHS
Not for Resale