Recognized as an American National Standard (ANSI)

IEEE Std C57.104-1991
(Revision of IEEE C57.104-1978)

IEEE Guide for the Interpretation of Gases Generated in Oil-Immersed Transformers

Sponsor
Transformers Committee
of the
IEEE Power Engineering Society

Approved June 27, 1991
IEEE Standards Board

Approved November 20, 1991
American National Standards Institute

Abstract: Detailed procedures for analyzing gas from gas spaces or gas-collecting devices as well as gas dissolved in oil are described. The procedures cover: (1) the calibration and use of field instruments for detecting and estimating the amount of combustible gases present in gas blankets above oil, or in gas detector relays; (2) the use of fixed instruments for detecting and determining the quantity of combustible gases present in gas-blanketed equipment; (3) obtaining samples of gas and oil from the transformer for laboratory analysis; (4) laboratory methods for analyzing the gas blanket and the gases extracted from the oil; and (5) interpreting the results in terms of transformer serviceability. The intent is to provide the operator with positive and useful information concerning the serviceability of the equipment. An extensive bibliography on gas evolution, detection, and interpretation is included.
Keywords: gas analysis, oil, oil-filled transformers, transformers

---

The Institute of Electrical and Electronics Engineers, Inc. 345 East 47th Street, New York, NY 10017-2394, USA

Copyright © 1992 by the Institute of Electrical and Electronics Engineers, Inc. All rights reserved. Published 1992 Printed in the United States of America

ISBN 1-55937-157-9

No part of this publication may be reproduced in any form, in an electronic retrieval system or otherwise, without the prior written permission of the publisher.

--`,,`-`-`,,`,,`,`,,`---

Copyright The Institute of Electrical and Electronics Engineers, Inc.
Provided by IHS under license with IEEE
No reproduction or networking permitted without license from IHS
Not for Resale

IEEE Standards documents are developed within the Technical Committees of the IEEE Societies and the Standards Coordinating Committees of the IEEE Standards Board. Members of the committees serve voluntarily and without compensation. They are not necessarily members of the Institute. The standards developed within IEEE represent a consensus of the broad expertise on the subject within the Institute as well as those activities outside of IEEE that have expressed an interest in participating in the development of the standard.

Use of an IEEE Standard is wholly voluntary. The existence of an IEEE Standard does not imply that there are no other ways to produce, test, measure, purchase, market, or provide other goods and services related to the scope of the IEEE Standard. Furthermore, the viewpoint expressed at the time a standard is approved and issued is subject to change brought about through developments in the state of the art and comments received from users of the standard. Every IEEE Standard is subjected to review at least every five years for revision or reaffirmation. When a document is more than five years old and has not been reaffirmed, it is reasonable to conclude that its contents, although still of some value, do not wholly reflect the present state of the art. Users are cautioned to check to determine that they have the latest edition of any IEEE Standard.

Comments for revision of IEEE Standards are welcome from any interested party, regardless of membership affiliation with IEEE. Suggestions for changes in documents should be in the form of a proposed change of text, together with appropriate supporting comments.

Interpretations: Occasionally questions may arise regarding the meaning of portions of standards as they relate to specific applications. When the need for interpretations is brought to the attention of IEEE, the Institute will initiate action to prepare appropriate responses. Since IEEE Standards represent a consensus of all concerned interests, it is important to ensure that any interpretation has also received the concurrence of a balance of interests. For this reason IEEE and the members of its technical committees are not able to provide an instant response to interpretation requests except in those cases where the matter has previously received formal consideration.

Comments on standards and requests for interpretations should be addressed to:

Secretary, IEEE Standards Board
445 Hoes Lane
P.O. Box 1331
Piscataway, NJ 08855-1331
USA

IEEE Standards documents are adopted by the Institute of Electrical and Electronics Engineers without regard to whether their adoption may involve patents on articles, materials, or processes. Such adoption does assume any liability to any patent owner, nor does it assume any obligation whatever to parties adopting the standards documents.

Copyright The Institute of Electrical and Electronics Engineers, Inc.
Provided by IHS under license with IEEE
No reproduction or networking permitted without license from IHS
Not for Resale

Foreword

(This foreword is not a part of IEEE Std C57.104-1991, IEEE Guide for the Interpretation of Gases Generated in Oil-Immersed Transformers.)

At the time that this standard was completed, the Transformers Committee had the following officers:

J. D. Borst, *Chair*
J. H. Harlow, *Vice Chair*
W. B. Binder, *Secretary*

At the time that this standard was completed, the Insulating Fluids Subcommittee had the following members:

H. A. Pearce, *Chair*
F. W. Heinrichs, *Secretary*

D. J. Allan
H. Azizian
D. Baranowski
J. G. Bryant
G. Bryant
J. Corkran
D. W. Crofts
D. H. Douglas
M. Fitzgerald
R. M. Frey
M. Frydman
P. Gervais
J. P. Gibeault
D. A. Gillies
J. Goudie
F. M. Gragg
F. J. Gryszkiewicz
T. J. Haupert
F. W. Heinrichs
P. J. Hoefler
C. R. Hoesel
B. G. Hunter
D. L. Johnson
J. J. Kelly
J. P. Kinney
J. G. Lackey
R. I. Lowe
G. G. McRae
M. M. McGee
K. McManamon
C. K. Miller
R. E. Minkwitz
R. J. Musil
W. Mutschler, Jr.
E. J. Norton
T. Orbeck
C. T. Raymond
A. D. Recchuite
G. J. Reitter
T. O. Rouse
L. J. Savio
G. J. Schreuders
D. W. Sundin
J. A. Thompson
T. P. Traub
R. A. Veitch
R. M. Vincent
L. Wagenaar

At the time that it balloted and approved this standard for submission to the IEEE Standards Board, the Transformers Committee had the following members:

E. J. Adolphson
L. C. Aicher
D. J. Allan
B. Allen
R. Allustiarti
S. Altman
J. C. Arnold
J. Aubin
R. Bancroft
D. Barnard
D. L. Basel
P. L. Bellaschi
S. Bennon
W. B. Binder
J. V. Bonucchi
J. D. Borst
C .V. Brown
O. R. Compton
F. W. Cook
J. L. Corkran
D. W. Crofts
J. N. Davis
D. H. Douglas
J. C. Dutton
J. K. Easley
J. A. Ebert
D. J. Fallon
S. L. Foster
M. Frydman
H. E. Gabel
R. E. Gearhart
D. W. Gerlach
D. A. Gillies
R. S. Girgis
R. L. Grubb
F. J. Gryszkiewicz
G. Hall
J. H. Harlow
F. W. Heinrichs
W. R. Henning
K. R. Highton
P. J. Hoefler
C. Hoesel
R.H. Hollister
C. C. Honey
E. Howells
C. Hurty
Y. P. Iijima
G. W. Iliff
R. G. Jacobsen
D. L. Johnson
D. C. Johnson
A. J. Jonnatti
C. P. Kappeler

Copyright The Institute of Electrical and Electronics Engineers, Inc.
Provided by IHS under license with IEEE
No reproduction or networking permitted without license from IHS
Not for Resale

R. B. Kaufman
J. J. Kelly
W. N. Kennedy
J. P. Kinney
B. Klaponski
A. D. Kline
E. Koenig
J. G. Lackey
R. E. Lee
H. F. Light
S. R. Lindgren
L. W. Long
L. A. Lowdermilk
R. I. Lowe
M. L. Manning
H. B. Margolis
T. Massouda
J. W. Matthews
J. McGill
C. J. McMillen
W. J. McNutt
S. P. Mehta
C. K. Miller
C. H. Millian
R. E. Minkwitz
M. Mitelman
H. R. Moore
R. J. Musil
W. H. Mutschler
E. T. Norton
R. A. Olsson
B. K. Patel
W. F. Patterson
H. A. Pearce
D. Perco
L. W. Pierce
J. M. Pollitt
C. P. Raymond
C. A. Robbins
L. J. Savio
W. E. Saxon
D. N. Sharma
V. Shenoy
W. W. Stein
L. R. Stensland
E. G. Strangas
D. Sundin
L. A. Swenson
D. S. Takach
A. M. Teplitzky
V. Thenappan
R. C. Thomas
J. A. Thompson
T. P. Traub
D. E. Truax
W. B. Uhl
R. E. Uptegraff, Jr.
G. H. Vaillancourt
R. A. Veitch
L. B. Wagenaar
R. J. Whearty
A. L. Wilks
W. E. Wrenn
A. C. Wurdack
E. J. Yasuda

The Accredited Standards Committee on Transformers, Regulators, and Reactors, C57, that reviewed and approved this document, had the following members at the time of approval:

Leo J. Savio, *Chair*
John A. Gauthier, *Secretary*

Organization Represented	Name of Representative
Electric Light and Power Group	P. E. Orehek
	S. M. A. Rizvi
	F. Stevens
	J. Sullivan
	J. C. Thompson
	M. C. Mingoia (*Alt.*)
Institute of Electrical and Electronics Engineers	J. D. Borst
	J. Davis
	J. H. Harlow
	L. Savio
	H. D. Smith
	R. A. Veitch
National Electrical Manufacturers Association	G. D. Coulter
	P. Dewever
	J. D. Douglas
	A. A. Ghafourian
	K. R. Linsley
	R. L. Plaster
	H. Robin
	R. E. Uptegraff, Jr.
	P. J. Hopkinson (*Alt.*)
	J. Nay (*Alt.*)
Tennessee Valley Authority	F. A. Lewis
Underwriters Laboratories, Inc.	W. T. O'Grady

Copyright The Institute of Electrical and Electronics Engineers, Inc.
Provided by IHS under license with IEEE
No reproduction or networking permitted without license from IHS
Not for Resale

US Department of Agriculture, REA ..... J. Bohlk
US Department of Energy Western Area Power Administration ..... D. R. Torgerson
US Department of the Interior, Bureau of Reclamation ..... F. W. Cook, Sr.
US Department of the Navy, Civil Engineering Corps ..... H. P. Stickley

When the IEEE Standards Board approved this standard on June 27, 1991, it had the following membership:

Marco W. Migliaro, *Chair*
Donald C. Loughry, *Vice Chair*
Andrew G. Salem, *Secretary*

Dennis Bodson	Donald N. Heirman	Lawrence V. McCall
Paul L. Borrill	Kenneth D. Hendrix	T. Don Michael*
Clyde Camp	John W. Horch	Stig L. Nilsson
James M. Daly	Ben C. Johnson	John L. Rankine
Donald C. Fleckenstein	Ivor N. Knight	Ronald H. Reimer
Jay Forster*	Joseph Koepfinger*	Gary S. Robinson
David F. Franklin	Irving Kolodny	Terrance R. Whittemore
Ingrid Fromm	Michael A. Lawler	
Thomas L. Hannan	John E. May, Jr.	

*Member Emeritus

Also included were the following nonvoting IEEE Standards Board liaisons:

Fernando Aldana	James Beall	Stanley Warshaw
Satish K. Aggarwal	Richard B. Engelman	

Mary Lynne Nielsen
IEEE Standards Department Project Editor

--`,,`,,-`-`,,`,,`,`,,`---

Copyright The Institute of Electrical and Electronics Engineers, Inc.
Provided by IHS under license with IEEE
No reproduction or networking permitted without license from IHS
Not for Resale

CLAUSE PAGE

1. Introduction 1

1.1 Scope 1
1.2 Limitations 2
1.3 References 2
1.4 Definitions 2

2. General Theory 3

2.1 Cellulosic Decomposition 3
2.2 Oil Decomposition 3
2.3 Application to Equipment 4
2.4 Establishing Baseline Data 5
2.5 Recognition of a Gassing Problem—Establishing Operating Priorities 5

3. Interpretation of Gas Analysis 5

3.1 Thermal Faults 5
3.2 Electrical Faults—Low Intensity Discharges 5
3.3 Electrical Faults—High Intensity Arcing 6

4. Suggested Operating Procedures Utilizing the Detection and Analysis of Combustible Gases 6

4.1 Determining Combustible Gas Generating Rates 6
4.2 Determining the Gas Space and Dissolved Gas-in-Oil Equivalents 8
4.3 Monitoring Insulation Deterioration Using Dissolved Gas Volume 8
4.4 Evaluation of Transformer Condition Using Individual and TDCG Concentrations 9
4.5 Evaluation of Possible Fault Type by the Key Gas Method 12
4.6 Evaluation of Possible Fault Type by Analysis of the Separate Combustible Gases Generated 14

5. Instruments for Detecting and Determining the Amount of Combustible Gases Present 16

5.1 Portable Instruments 16
5.2 Fixed Instruments 17

6. Procedures for Obtaining Samples of Gas and Oil From the Transformer for Laboratory Analysis 19

6.1 Gas Samples for Laboratory Analysis 19
6.2 Gas Dissolved in Oil 19

7. Laboratory Methods for Analyzing the Gas Blanket and the Gases Extracted From the Oil 19

7.1 Determination of Total Dissolved Gas 19
7.2 Determination of Individual Dissolved Gases 19
7.3 Determination of Individual Gases Present in the Gas Blanket 19

8. Bibliography 20

8.1 Sources 20
8.2 Gas Evolution 20
8.3 Detection and Interpretation 22

Copyright The Institute of Electrical and Electronics Engineers, Inc.
Provided by IHS under license with IEEE
No reproduction or networking permitted without license from IHS Not for Resale

IEEE Guide for the Interpretation of Gases Generated in Oil-Immersed Transformers

1. Introduction

The detection of certain gases generated in an oil-filled transformer in service is frequently the first available indication of a malfunction that may eventually lead to failure if not corrected. Arcing, corona discharge, low-energy sparking, severe overloading, pump motor failure, and overheating in the insulation system are some of the possible mechanisms. These conditions occurring singly, or as several simultaneous events, can result in decomposition of the insulating materials and the formation of various combustible and noncombustible gases. Normal operation will also result in the formation of some gases. In fact, it is possible for some transformers to operate throughout their useful life with substantial quantities of combustible gases present. Operating a transformer with large quantities of combustible gas present is not a normal occurrence but it does happen, usually after some degree of investigation and an evaluation of the possible risk.

In a transformer, generated gases can be found dissolved in the insulating oil, in the gas blanket above the oil, or in gas collecting devices. The detection of an abnormal condition requires an evaluation of the amount of generated gas present and the continuing rate of generation. Some indication of the source of the gases and the kind of insulation involved may be gained by determining the composition of the generated gases.

1.1 Scope

This guide applies to mineral-oil-immersed transformers and addresses:

1) The theory of combustible gas generation in a transformer
2) The interpretation of gas analysis
3) Suggested operating procedures
4) Various diagnostic techniques, such as key gases, Dornenberg ratios, and Rogers ratios
5) Instruments for detecting and determining the amount of combustible gases present
6) A bibliography of related literature

--`,,`-`-`,,`,,`,`,,`---

Copyright The Institute of Electrical and Electronics Engineers, Inc.
Provided by IHS under license with IEEE
No reproduction or networking permitted without license from IHS
Not for Resale

1.2 Limitations

Many techniques for the detection and the measurement of gases have been established. However, it must be recognized that analysis of these gases and interpretation of their significance is at this time not a science, but an art subject to variability. Their presence and quantity are dependent on equipment variables such as type, location, and temperature of the fault; solubility and degree of saturation of various gases in oil; the type of oil preservation system; the type and rate of oil circulation; the kinds of material in contact with the fault; and finally, variables associated with the sampling and measuring procedures themselves. Because of the variability of acceptable gas limits and the significance of various gases and generation rates, a consensus is difficult to obtain. The principal obstacle in the development of fault interpretation as an exact science is the lack of positive correlation of the fault-identifying gases with faults found in actual transformers.

The result of various ASTM testing round robins indicates that the analytical procedures for gas analysis are difficult, have poor precision, and can be wildly inaccurate, especially between laboratories. A replicate analysis confirming a diagnosis should be made before taking any major action.

This guide is, in general, an advisory document. It provides guidance on specific methods and procedures to assist the transformer operator in deciding on the status and continued operation of a transformer that exhibits combustible gas formation. However, operators must be cautioned that, although the physical reasons for gas formation have a firm technical basis, interpretation of that data in terms of the specific cause or causes is not an exact science, but is the result of empirical evidence from which rules for interpretation have been derived. Hence, exact causes or conditions within transformers may not be inferred from the various procedures. The continued application of the rules and limits in this guide, accompanied by actual confirmation of the causes of gas formation, will result in continued refinement and improvement in the correlation of the rules and limits for interpretation.

Individual experience with this guide will assist the operators in determining the best procedure, or combination of procedures, for each specific case. Some of the factors involved in the decision of the operator are: the type of oil preservation system, the type and frequency of the sampling program, and the analytical facilities available. However, whether used separately or as complements to one another, the procedures disclosed in this guide all provide the operator with positive and useful information concerning the serviceability of the equipment.

1.3 References

The following references should be used in conjunction with this guide:

[1] ASTM D2945-90, Test Methods for Gas Content of Insulating Oils.[1]

[2] ASTM D3305-84 (Reaff. 89), Method for Sampling Gas from a Transformer.

[3] ASTM D3612-90, Test Methods for Analysis of Gases Dissolved in Electrical Insulating Oil by Gas Chromatography.

[4] ASTM D3613-87, Methods for Sampling Electrical Insulating Oils for Gas Analysis and Determination of Water Content.

1.4 Definitions

The following definitions of terms are used in this guide:

[1]ASTM publications are available from the Customer Service Department, American Society for Testing and Materials, 1916 Race Street, Philadelphia, PA 19103, USA.

Copyright © 1992 IEEE All Rights Reserved

--`,,-`-`,,`,,`,`,,`---

Copyright The Institute of Electrical and Electronics Engineers, Inc.
Provided by IHS under license with IEEE
No reproduction or networking permitted without license from IHS Not for Resale

key gases: Gases generated in oil-filled transformers that can be used for qualitative determination of fault types, based on which gases are typical or predominant at various temperatures.

partial discharge: An electric discharge that only partially bridges the insulation between conductors, and that may or may not to the conductor.

TCG: Total combustible gas.

TDCG: Total dissolved combustible gas.

2. General Theory

The two principal causes of gas formation within an operating transformer are thermal and electrical disturbances. Conductor losses due to loading produce gases from thermal decomposition of the associated oil and solid insulation. Gases are also produced from the decomposition of oil and insulation exposed to arc temperatures. Generally, where decomposition gases are formed principally by ionic bombardment, there is little or no heat associated with low-energy discharges and corona.

2.1 Cellulosic Decomposition

The thermal decomposition of oil-impregnated cellulose insulation produces carbon oxides (CO, CO_2) and some hydrogen or methane (H_2, CH_4) due to the oil (CO_2 is not a combustible gas). The rate at which they are produced depends exponentially on the temperature and directly on the volume of material at that temperature. Because of the volume effect, a large, heated volume of insulation at moderate temperature will produce the same quantity of gas as a smaller volume at a higher temperature.

2.2 Oil Decomposition

Mineral transformer oils are mixtures of many different hydrocarbon molecules, and the decomposition processes for these hydrocarbons in thermal or electrical faults are complex. The fundamental steps are the breaking of carbon-hydrogen and carbon-carbon bonds. Active hydrogen atoms and hydrocarbon fragments are formed. These free radicals can combine with each other to form gases, molecular hydrogen, methane, ethane, etc., or can recombine to form new, condensable molecules. Further decomposition and rearrangement processes lead to the formation of products such as ethylene and acetylene and, in the extreme, to modestly hydrogenated carbon in particulate form. These processes are dependent on the presence of individual hydrocarbons, on the distribution of energy and temperature in the neighborhood of the fault, and on the time during which the oil is thermally or electrically stressed. These reactions occur stoichiometrically; therefore, the specific degradations of the transformer oil hydrocarbon ensembles and the fault conditions cannot be predicted reliably from chemical kinetic considerations. An alternative approach is to assume that all hydrocarbons in the oil are decomposed into the same products and that each product is in equilibrium with all the others. Thermodynamic models permit calculation of the partial pressure of each gaseous product as a function of temperature, using known equilibrium constants for the relevant decomposition reactions. An example of the results of this approach is shown in Fig 1 due to Halstead. The quantity of hydrogen formed is relatively high and insensitive to temperature; formation of acetylene becomes appreciable only at temperatures nearing 1000 °C. Formation of methane, ethane, and ethylene each also have unique dependences on temperature in the model. The thermodynamic approach has limits; it must assume an idealized but nonexistent isothermal equilibrium in the region of a fault, and there is no provision for dealing with multiple faults in a transformer. However, the concentrations of the individual gases actually found in a transformer can be used directly or in ratios to estimate the thermal history of the oil in the transformer from a model and to adduce any past or potential faults on the unit. As the simplest example: the presence of acetylene suggests a high temperature fault, perhaps an arc, has occurred in the oil in a transformer; the presence of methane suggests that—*if* a fault has occurred—it is a lower energy electrical or thermal fault. Much work has been done to correlate predictions from thermodynamic models with actual behavior of transformers.

Copyright © 1992 IEEE All Rights Reserved

Copyright The Institute of Electrical and Electronics Engineers, Inc.
Provided by IHS under license with IEEE
No reproduction or networking permitted without license from IHS Not for Resale

2.3 Application to Equipment

All transformers generate gases to some extent at normal operating temperatures. But occasionally a gas-generating abnormality does occur within an operating transformer such as a local or general overheating, dielectric problems, or a combination of these. In electrical equipment, these abnormalities are called “faults.” Thermal, corona, and arcing faults are described in 3.1, 3.2, and 3.3. Internal faults in oil produce the gaseous byproducts hydrogen (H_2), methane (CH_4), acetylene (C_2H_2), ethylene (C_2H_4), and ethane (C_2H_6). When cellulose is involved, the faults produce methane (CH_4), hydrogen (H_2), carbon monoxide (CO), and carbon dioxide (CO_2). Each of these types of faults produce certain gases that are generally combustible. The total of all combustible gases may indicate the existence of any one, or a combination, of thermal, electrical, or corona faults. Certain combinations of each of the separate gases determined by chromatography are unique for different fault temperatures. Also, the ratios of certain key gases have been found to suggest fault types. Interpretation by the individual gases can become difficult when there is more than one fault, or when one type of fault progresses to another type, such as an electrical problem developing from a thermal one.

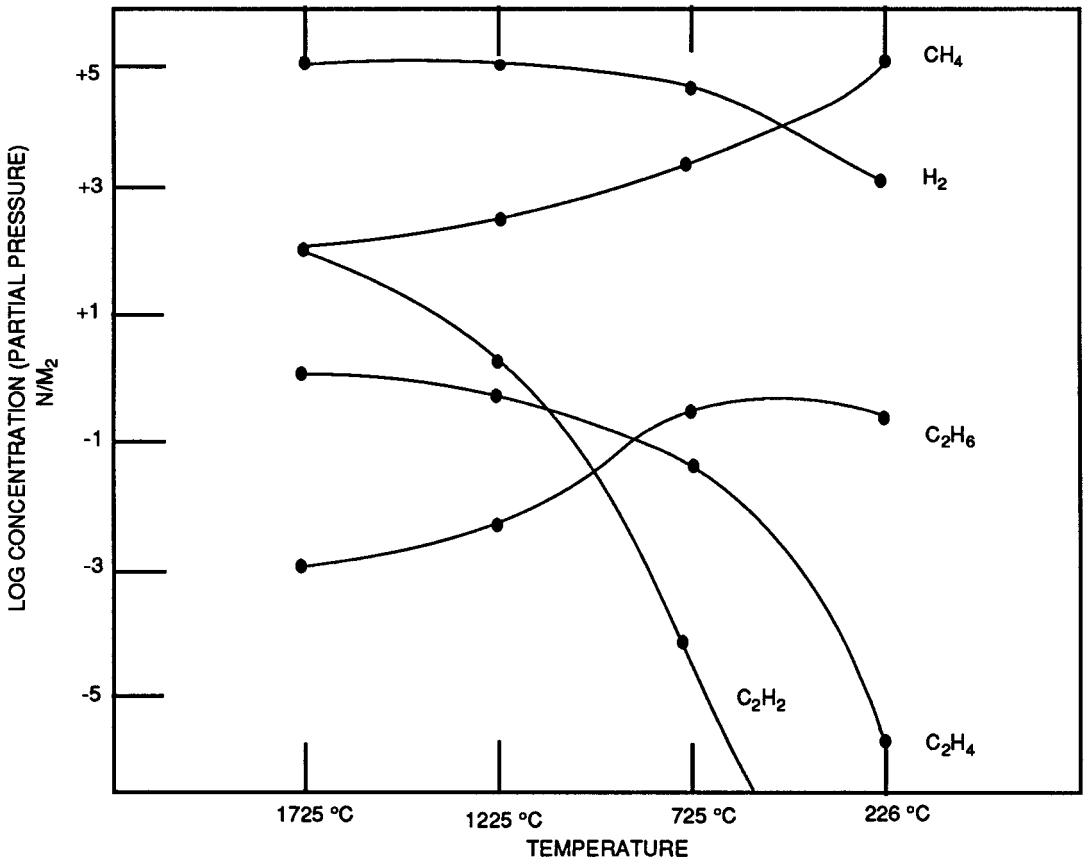

Figure 1— Halstead's Thermal Equilibrium Partial Pressures as a Function of Temperature

Attempts to assign greater significance to gas than justified by the natural variability of the generating and measuring events themselves will lead to gross errors in interpretation. However, in spite these gas-generating mechanisms are the only existing basis for the analytical rules and procedures developed in this guide. In fact, it is known that some transformers continue to operate for many years in spite of above average rates of gas generation.

Copyright © 1992 IEEE All Rights Reserved

Copyright The Institute of Electrical and Electronics Engineers, Inc.
Provided by IHS under license with IEEE
No reproduction or networking permitted without license from IHS Not for Resale

2.4 Establishing Baseline Data

Establishing a reference point for gas concentration in new or repaired transformers and following this with a routine monitoring program is a key element in the application of this guide. Monitoring the health (serviceability) of a transformer must be done on a routine basis and can start anytime, not just for new units.

Generally, daily or weekly sampling is recommended after start-up, followed by monthly or longer intervals. Routine sampling intervals may vary depending on application and individual system requirements. For example, some utilities sample generator step-up (GSU) transformers four to six times a year, units rated over 138 kV twice a year, and some 765 kV units are sampled monthly.

2.5 Recognition of a Gassing Problem—Establishing Operating Priorities

Much information has been acquired over the past 20 years on diagnosing incipient fault conditions in transformer systems. This information is of a general nature but is often applied to very specific problems or situations. One consistent finding with all schemes for interpreting gas analysis is that the more information available concerning the history of the transformer and test data, the greater the probability for a correct diagnosis of the health of the unit.

A number of simple schemes employing principal gases or programs using ratios of key gases have been employed for providing a tentative diagnosis when previous information is unavailable or indicated no fault condition existed. Principal gas or ratio methods require detectable or minimum levels of gases to be presents or norms to be exceeded, before they can provide a useful diagnosis.

3. Interpretation of Gas Analysis

3.1 Thermal Faults

Referring to Fig 1, the decomposition of mineral oil from 150 °C to 500 °C produces relatively large quantities of the low molecular weight gases, such as hydrogen (H_2) and methane (CH_4), and trace quantities of the higher molecular weight gases ethylene (C_2H_4) and ethane (C_2H_6). As the fault temperature in mineral oil increases to modest temperatures, the hydrogen concentration exceeds that of methane, but now the temperatures are accompanied by significant quantities of higher molecular weight gases, first ethane and then ethylene. At the upper end of the thermal fault range, increasing quantities of hydrogen and ethylene and traces of acetylene (C_2H_2) may be produced. In contrast with the thermal decomposition of oil, the thermal decomposition of cellulose and other solid insulation produces carbon monoxide (CO), carbon dioxide (CO_2), and water vapor at temperatures much lower than that for decomposition of oil and at rates exponentially proportional to the temperature. Because the paper begins to degrade at lower temperatures than the oil, its gaseous byproducts are found at normal operating temperatures in the transformer. A GSU transformer, for example, that operates at or near nameplate rating will normally generate several hundred parts per million (ppm) of CO and several thousand parts per million of CO_2 without excessive hot spots.

The ratio of CO_2/CO is sometimes used as an indicator of the thermal decomposition of cellulose. This ratio is normally more than seven. For the CO_2/CO ratio, the respective values of CO_2 and CO should exceed 5000 ppm and 500 ppm in order to improve the certainty factor, i.e., ratios are sensitive to minimum values. As the magnitude of CO increases, the ratio of CO_2/CO decreases. This may indicate an abnormality that is degrading cellulosic insulation.

3.2 Electrical Faults—Low Intensity Discharges

Referring to Fig 1, low intensity discharges such as partial discharges and very low level intermittent arcing produce mainly hydrogen, with decreasing quantities of methane and trace quantities of acetylene. As the intensity of the discharge increases, the acetylene and ethylene concentrations rise significantly (see Table 6).

Copyright © 1992 IEEE All Rights Reserved

Copyright The Institute of Electrical and Electronics Engineers, Inc.
Provided by IHS under license with IEEE
No reproduction or networking permitted without license from IHS Not for Resale

3.3 Electrical Faults—High Intensity Arcing

Referring to Fig 1, as the intensity of the electrical discharge reaches arcing or continuing discharge proportions that produce temperatures from 700 °C to 1800 °C, the quantity of acetylene becomes pronounced.

4. Suggested Operating Procedures Utilizing the Detection and Analysis of Combustible Gases

From an operational point of view, it is important to establish the following priorities:

1) *Detection*. Detect the generation of any gases that exceed “normal” quantities and utilize appropriate guidelines so the possible abnormality may be recognized at the earliest possible time in order to minimize damage or avoid a failure.
2) *Evaluation*. Evaluate the impact of an abnormality on the serviceability of the transformer, using a set of guidelines or recommendations.
3) *Action*. Take the recommended action, beginning with increased surveillance and confirming or supplementary analysis and leading to either a determination of load sensitivity, reducing the load on the transformer, or actually removing the unit from service.

The success of fault gas analysis necessitates the earliest possible detection of gases using the following methods:

— Direct measurement of the amount of combustible gas in the gas space or relay [Total Combustible Gas (TCG)—See 5.2.1 and 5.2.2].
— Direct measurement of the amount of combustible gas dissolved in the oil (gas-in-oil monitors—See 5.2).
— Chromatographic separation and analysis for the individual components in a gas mixture extracted from a sample of the transformer oil or a sample of the transformer gas space (See Section 7.).

An operating procedure utilizing the gas data from the above sources is to be developed immediately following the initial detection of combustible gases. Fig 2 is a flow chart that traces the suggested process from the initial detection of combustible gas to the final assessment of the status of the transformer.

4.1 Determining Combustible Gas Generating Rates

A given gas volume and distribution may be generated over a long time period by a relatively insignificant fault or in a very short time period by a more severe fault. Hence, one measurement does not indicate the rate of generation and may indicate very little about the severity of the fault. Once a suspicious gas presence is detected, it is important to be certain whether the fault that generated the gas is active.

An evolution rate greater than (0.1) ft^3 of combustible gas per day may indicate the unit has an active internal fault. To calculate the rate of evolution, take the sum of the concentrations (in ppm) of all the combustible (everything but CO_2, O_2, N_2) in the first and second samples and use Eq 1.

$$R = \frac{(S_T - S_O) \times V \times 10^{-6}}{7.5 \times T} \quad (1)$$

where:

R = Rate (ft^3/day)
S_O = First sample (ppm)
S_T = Second sample (ppm)

Copyright © 1992 IEEE All Rights Reserved

Copyright The Institute of Electrical and Electronics Engineers, Inc.
Provided by IHS under license with IEEE
No reproduction or networking permitted without license from IHS Not for Resale

V = Tank oil volume (gallons)
T = Time (days)

Limits for average gas generation rates are given for gas space analysis (TCG) in 4.4.1, and for total dissolved gas analysis (TDCG) in 4.4.2.

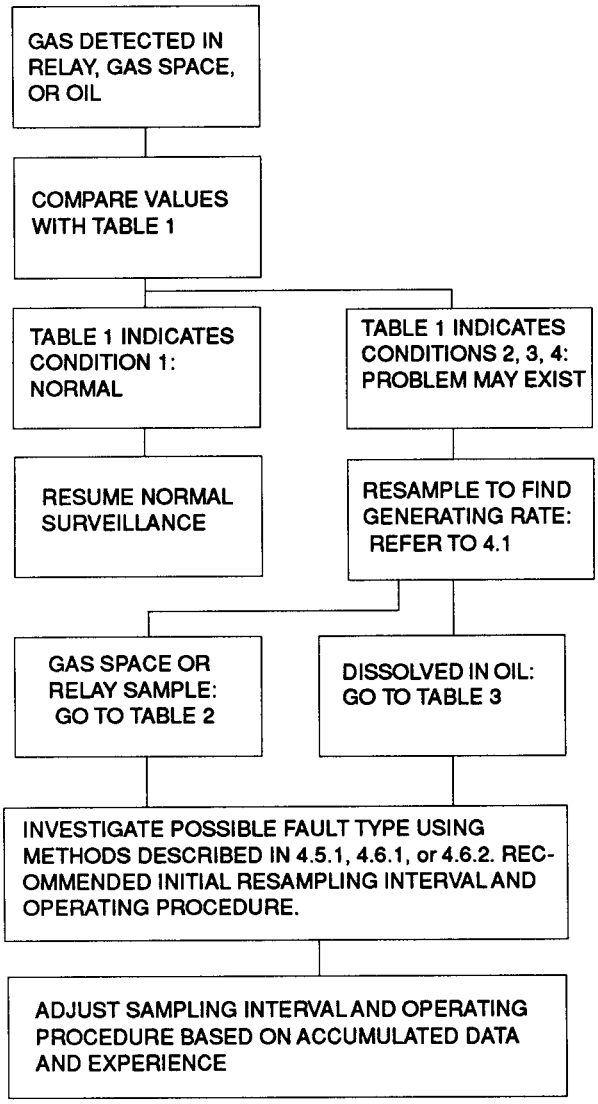

EXAMPLES

	CONSERVATOR	GAS SPACE
STEP 1:	GAS DETECTED IN OIL	GAS DETECTED IN GAS SPACE
STEP 2:	DATA (PPM): H_2 = 270, CH_4 = 190, CO = 280, C_2H_2 = 37, C_2H_4 = 17, C_2H_6 = 4 TOTAL DISSOLVED COMBUSTIBLE GAS (TDCG)=798	TOTAL GAS = 1.5%
STEP 3:	TABLE 1 INDICATES CONDITION 2	PROCEED TO STEP 4
STEP 4:	RESAMPLE (SEE 4.1) INDICATES A RATE OF 20 PPM/ DAY AND INCREASING	RESAMPLE (SEE 4.1) INDICATES A RATE OF .025%/ DAY AND INCREASING
STEP 5:	TABLE 3	TABLE 2
	INDICATES CONDITION 2, INTERVAL C AND PROCEDURE 3. ADVISE MANUFACTURER; EXTREME CAUTION; PLAN OUTAGE; RESAMPLE PER INTERVAL; ANALYZE GAS SPACE AND DISSOLVED GAS COMPONENTS [SEE NOTE (1)]	
STEP 6:	4.5 KEY GAS: H_2, CH_4—ELECTRICAL-CORONA. 4.6.1 DOERNENBURG [SEE NOTE (1)] FAULT TYPE: POSSIBLE ARCING. 4.6.2 ROGERS: FAULT TYPE: CASE 2 POSSIBLE ARCING.	

NOTES:

1 — Assume equal dissolved components in both examples.

2 — Actual case was inspected when C_2H_2 reached 40 ppm. Found arcing between insulated NLTC shaft pin and coupling of drive mechanism.

Figure 2— Operating Procedure Flow Chart

Copyright © 1992 IEEE All Rights Reserved

Copyright The Institute of Electrical and Electronics Engineers, Inc.
Provided by IHS under license with IEEE
No reproduction or networking permitted without license from IHS
Not for Resale

4.2 Determining the Gas Space and Dissolved Gas-in-Oil Equivalents

Gas space and oil equivalents are used to compare the results of analysis of the gas space (TCG) with results from analysis of the gases dissolved in the oil (TDCG). Comparisons of gas ratios obtained from the gas space can then be compared to similar ratios of gases extracted from the oil. It should be noted that the calculated equivalent values of TCG_e and experimentally measured values of TCG probably do not show close agreement, since the equation for obtaining the equivalents assumes the existence of equilibrium between the gas blanket and the oil. This condition may not exist, particularly in the case of an actively progressing fault. However, the equation is valuable for the determination of a limiting value for the expected total combustible gas concentration in the gas blanket. The dissolved gas equivalent of the TCG_e is obtained using the following equation:

$$TCG_e = \sum_{C_1}^{C_n} \left[\frac{\frac{F_c}{B_c}}{\sum_{G_n} \frac{F_g}{B_g}} \right] \times 100 \qquad (2)$$

where:

TCG_e = An estimate of the percent of combustible gas in the gas space
C = Combustible gas
G = Each gas dissolved in oil (combustible and noncombustible)
F_c = The concentration expressed in parts per million (ppm) of combustible gas *g* dissolved in oil
B_c = The Ostwald solubility coefficient of combustible gas *g*
F_g = The concetration of a particular gas dissolved in oil
B_g = The Ostwald solubility coefficient of particular gas

Gas	Ostwald Coefficient (*B*) (25°C)
H_2*	0.0429
O_2	0.138
CO_2	0.900
C_2H_2*	0.938
C_2H_4*	1.35
N_2	0.0745
CO*	0.102
C_2H_6*	1.99
C_2H_4*	0.337

NOTE — Ostwald coefficients are for an oil with a density of 0.880, a temperature of 25 °C, and a pressure of 1 atmosphere.

*Combustibles

4.3 Monitoring Insulation Deterioration Using Dissolved Gas Volume

One acceptable method for monitoring the deterioration of transformer insulating material involves calculating the total volume of gas evolved. The total volume of evolved gas is an indicator of the magnitude of incipient faults.

Copyright © 1992 IEEE All Rights Reserved

Copyright The Institute of Electrical and Electronics Engineers, Inc.
Provided by IHS under license with IEEE
No reproduction or networking permitted without license from IHS Not for Resale

Succeeding samples indicate changes with time as the fault(s) develop. Trends are readily apparent when gas volume is plotted versus time.

To determine the volume, in gallons, of fault gas dissolved in insulating oil, use Eq 3.

$$TCG_V = \frac{FG\ (V)}{1,\ 000,\ 000} \tag{3}$$

where:

FG = Sum of H_2, CH_4, C_2H_6, C_2H_4, C_2H_2, and CO (ppm)
V = Volume of oil in transformer (gallons)
TCG_V = Total dissolved combustible gas (gallons)

This straightforward method is useful for completely oil-filled (conservator-type) transformers with conditions that produce small quantities of fault gas. These conditions warrant continued monitoring but have not yet developed a distinct character according to the other methods of fault determination described in this guide. This fault-gas volume method continues to be useful as fault conditions enlarge, with the added advantage that it permits continuous monitoring of insulation deterioration in spite of any oil handling activity that includes degassification.

4.4 Evaluation of Transformer Condition Using Individual and TDCG Concentrations

It can be difficult to determine whether a transformer is behaving normally if it has no previous dissolved gas history. Also, considerable differences of opinion exist for what is considered a “normal transformer” with acceptable concentrations of gases.

A four-level criterion has been developed to classify risks to transformers, when there is no previous dissolved gas history, for continued operation at various combustible gas levels. The criterion uses both concentrations for separate gases and the total concentration of all combustible gases. See Table 1.

Condition 1 TDCG below this level indicates the transformer is operating satisfactorily (see Fig 2). Any individual combustible gas exceeding specified levels should prompt additional investigation (see 4.5 and 4.6).

Condition 2 TDCG within this range indicates greater than normal combustible gas level. Any individual combustible gas exceeding specified levels should prompt additional investigation. Proceed per Fig 2, Step 3. Action should be taken to establish a trend (Fig 2, Step 4). Fault(s) may be present. Proceed to 4.4.1 or 4.4.2.

Condition 3 TDCG within this range indicates a high level of decomposition. Any individual combustible gas exceeding specified levels should prompt additional investigation. Proceed per Fig 2, Step 3. Immediate action should be taken to establish a trend (Fig 2, Step 4). Fault(s) are probably present. Proceed to 4.4.1 or 4.4.2.

Condition 4 TDCG within this range indicates excessive decomposition. Continued operation could result in failure of the transformer. Proceed immediately and with caution per Fig 2, Step 3, and 4.4.1 or 4.4.2.

Table 1 lists the dissolved gas concentrations for the individual gases and TDCG for Conditions 1 through 4. This table is used to make the original assessment of a gas sing condition on a new or recently repaired transformer or is used if there are no previous tests on the transformer for dissolved gases or if there is no recent history. Users of this guide are advised that the dissolved gas concentrations contained in Table 1 are consensus values based on the experiences of many companies. The transformer operator may decide to use different dissolved gas concentrations for the individual gases (particularly acetylene) and TDCG based on engineering judgment and experience with other similar transformers.

Copyright © 1992 IEEE All Rights Reserved

Copyright The Institute of Electrical and Electronics Engineers, Inc.
Provided by IHS under license with IEEE
No reproduction or networking permitted without license from IHS Not for Resale

Table 1— Dissolved Gas Concentrations

Status	Dissolved Key Gas Concentration Limits (ppm*)							
	H_2	CH_4	C_2H_2	C_2H_4	C_2H_6	CO	CO_2	TDCG†
Condition 1	100	120	35	50	65	350	2500	720
Condition 2	101–700	121–400	36–50	51–100	66–100	351–570	2500–4000	721–1920
Condition 3	701–1800	401–1000	51–80	101–200	101–150	571–1400	4001–10000	1921–4630
Condition 4	>1800	>1000	>80	>200	>150	>1400	>10000	>4630

NOTES:
1 — Table 1 assumes that no previous tests on the transformer for dissolved gas analysis have been made or that no recent history exists. If a previous analysis exists, it should be reviewed to determine if the situation is stable or unstable. Refer to Tables 2 and 3 for appropriate action(s) tb be taken.
2 — An ASTM round robin indicated variability in gas analysis between labs. This should be considered when having gas analysis made by different labs.

*The numbers shown in Table 1 are in parts of gas per million parts of oil (ppm) volumetrically and are based on a large power transformer with several thousand gallons of oil. With a smaller oil volume, the same volume of gas will give a higher gas concentration. Small distribution transformers and voltage regulators may contain combustible gases because of the operation of internal expulsion fuses or load break switches. The status codes in Table 1 are also not applicable to other apparatus in which load break switches operate under oil.
†The TDCG value does not include CO_2, which is not a combustible gas.

The condition for a particular transformer is determined by finding the highest level for individual gases or the TDCG in Table 1. For example, if a sample contained the following gas concentrations (in ppm, vol/vol):

H_2	CH_4	C_2H_2	C_2H_4	C_2H_6	CO	TDCG
270	253	37	17	75	524	1034

the gases that fall into the highest condition are H_2, CH_4, C_2H_2, C_2H_6, and TDCG. Therefore, this data would indicate that the transformer would be classified as Condition 2. This example can also be used to show two other factors that should be considered when using this table, that is, the age of the transformer and the type of incipient condition.

New transformers (a year or less) usually contain levels of gases that would fall well below Condition 1 and do not contain detectable levels of acetylene. Therefore, the degree of concern in the example would be much higher for a one-month-old transformer than a 20-year-old transformer.

Another consideration is that acetylene may be generated from three different incipient fault conditions, i.e., high temperature overheating of oil, partial discharge (low energy discharge), or arcing. In the case of overheating, acetylene will represent a small proportion of the hydrocarbon gases. In the case of partial discharge, very high concentrations of hydrogen will be generated relative to acetylene, and this would generally be a cause for concern even though the TDCG is not abnormally high. The most severe condition is arcing. When high-energy arcing occurs, hydrogen and acetylene are generally of the same magnitude, as are the hydrocarbon gases. When an active arcing condition is found, immediate attention is required.

4.4.1 Determining the Transformer Condition and Operating Procedure Utilizing TCG in the Gas Space

When sudden increases in the combustible gas concentrations or generating rates in the gas space of successfully operating transformers occur and an internal fault is suspected, use the procedure recommended in Fig 2.

Table 2 indicates the recommended initial sampling intervals and operating procedures for various levels of TCG (in percent).

Copyright © 1992 IEEE All Rights Reserved

Copyright The Institute of Electrical and Electronics Engineers, Inc.
Provided by IHS under license with IEEE
No reproduction or networking permitted without license from IHS Not for Resale

Once the source of gassing is determined by analysis, inspection, consultation, or combinations thereof and the risk has been assessed, then engineering judgment should be applied to determine the final sampling interval and operating procedure.

Table 2— Actions Based on TCG

	TCG Levels (%)	TCG Rate (%/day)	Sampling Intervals and Operating Procedures for Gas Generation Rates	
			Sampling Interval	Operating Procedures
Condition 4	> = 5	>.03	Daily	Consider removal from service. Advise manufacturer.
		.03–.01	Daily	
		<.01	Weekly	Exercise extreme caution. Analyze for individual gases. Plan outage. Advise manufacturer.
Condition 3	<5 to > = 2	>.03	Weekly	Exercise extreme caution. Analyze for individual gases. Plan outage. Advise manufacturer.
		.03–.01	Weekly	
		<.01	Monthly	
Condition 2	<2 to > = .5	>.03	Monthly	Exercise caution. Analyze for individual gases. Determine load dependence.
		.03–.01	Monthly	
		<01	Quarterly	
Condition 1	<.5	>.03	Monthly	Exercise caution. Analyze for individual gases. Determine load dependence.
		.03–.01	Quarterly	Continue normal operation.
		<.01	Annual	

Example: A transformer has a TCG level of 0.4% and is generating gas at a constant rate of 0.035% TCG per day. The table indicates Condition 2. It should be sampled monthly, and the operator should follow Procedure 2 in Table 2.

4.4.2 Determining the Operating Procedure and Sampling Interval From the TDCG Levels and Generating Rates in the Oil

When sudden increases in the dissolved gas content of the oil in successfully operating transformers occur and an internal fault is suspected, the procedures recommended in Fig 2 should be used. Table 3 indicates the recommended initial sampling intervals and operating procedures for various levels of TDCG (in ppm). An increasing gas generation rate indicates a problem of increasing severity; therefore, a shorter sampling interval is recommended.

Once the source of of gassing is determined by analysis, inspection, consultation, or combinations thereof and the risk, has been assessed, then engineering judgment should be applied to determine the final sampling interval and operating procedure.

Copyright © 1992 IEEE All Rights Reserved

Copyright The Institute of Electrical and Electronics Engineers, Inc.
Provided by IHS under license with IEEE
No reproduction or networking permitted without license from IHS
Not for Resale

Table 3— Actions Based on TDCG

	TDCG Levels (ppm)	TDCG Rates (ppm/day)	Sampling Intervals and Operating Procedures for Gas Generation Rates	
			Sampling Interval	Operating Procedures
Condition 4	>4630	>30	Daily	Consider removal from service. Advise manufacturer.
		10–30	Daily	
		<10	Weekly	Exercise extreme caution. Analyze for individual gases. Plan outage. Advise manufacturer.
Condition 3	1921–4630	>30	Weekly	Exercise extreme caution. Analyze for individual gases. Plan outage. Advise manufacturer.
		10–30	Weekly	
		<10	Monthly	
Condition 2	721–1920	>30	Monthly	Exercise caution. Analyze for individual gases. Determine load dependence.
		10–30	Monthly	
		<10	Quarterly	
Condition 1	≤ 720	>30	Monthly	Exercise caution. Analyze for individual gases. Determine load dependence.
		10–30	Quarterly	Continue normal operation.
		<10	Annual	

Example: If a transformer has a TDCG level of 1300 ppm and generates gas at a constant rate below 10 ppm per day, it should be sampled quarterly, and the operator should follow Procedure 2. If the rate increases to 30 ppm per day but remains constant, the operator should now sample monthly.

4.5 Evaluation of Possible Fault Type by the Key Gas Method

The preceding discussion of the dependence on temperature of the types of oil and cellulose decomposition gases (2.1 and 2.2) provides the basis for the qualitative determination of fault types from the gases that are typical, or predominant, at various temperatures. These significant gases and proportions are called “key gases.” Fig 3 indicates these “key gases” and relative proportions for the four general fault types.

Copyright © 1992 IEEE All Rights Reserved

Copyright The Institute of Electrical and Electronics Engineers, Inc.
Provided by IHS under license with IEEE
No reproduction or networking permitted without license from IHS Not for Resale

1. Thermal—Oil: Decomposition products include ethylene and methane, together with smaller quanities of hydrogen and ethane. Traces of acetylene may be formed if the fault is servere or involves electrical contracts.
Principal Gas — Ethylene

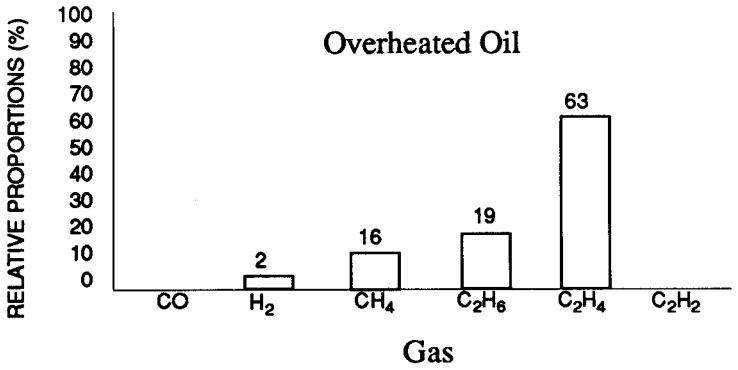

2. Thermal—Cellulose: Large quantities of carbon dioxide and carbon monoxide are evolved from overheated cellulose. Hydrocarbon gases, such as methane and ethylene, will be formed if the fault involves an oil-impregnated structure.
Principal Gas — Carbon Monoxide

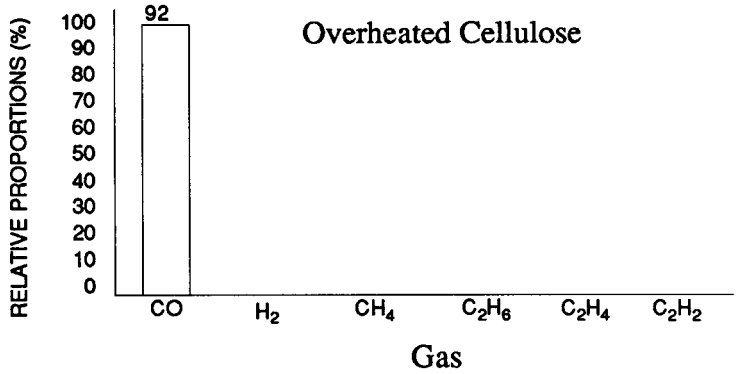

3. Electrical—Corona: Low-energy electrical discharges produce hydrogen and methane, with small quanities of ethane and ethylene. Comparable amounts of carbon monoxide and dioxide may result from discharges in cellulose.
Principal Gas — Hydrogen

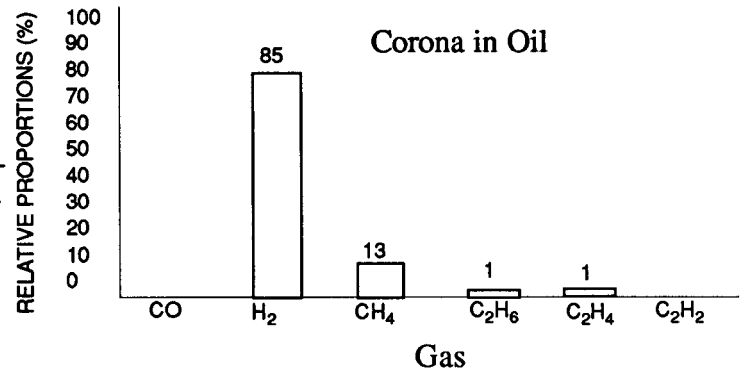

4. Electrical—Arcing: Large amounts of hydrogen and acetylene are produced, with minor quantities of methane and ethylene. Carbon dioxide and carbon monoxide may also be formed if the fault involves cellulose. Oil may be carbonized.
Principal Gas — Acetylene

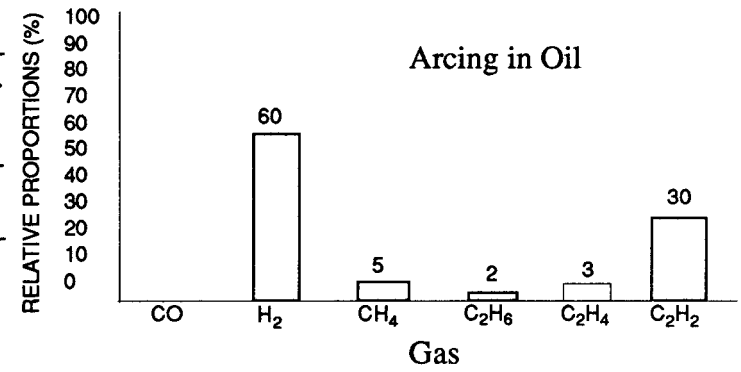

Figure 3— Key Gases Evaluation

Copyright © 1992 IEEE All Rights Reserved

Copyright The Institute of Electrical and Electronics Engineers, Inc.
Provided by IHS under license with IEEE
No reproduction or networking permitted without license from IHS
Not for Resale

4.6 Evaluation of Possible Fault Type by Analysis of the Separate Combustible Gases Generated

The use of gas ratios to indicate a single possible fault type is an empirical process based upon the experience of each individual investigator in correlating the gas analyses of many units with the fault type subsequently assigned as the cause for disturbance or failure when the unit was examined. This process was attributed to Doernenburg and subsequently confirmed by Rogers on European systems, from which the bulk of the diagnostic correlation is obtained. US investigators have applied the European rules to units on US systems with varying degrees of success; however, a US data base of comparable size to the European reports does not exist.

The diagnostic theories based upon the thermal degradation principles described in 2.1 and 2.2 employ an array of ratios of certain key combustible gases as the fault type indicators. These five ratios are:

Ratio 1 (R1) = CH_4/H_2

Ratio 2 (R2) = C_2H_2/C_2H_4

Ratio 3 (R3) = C_2H_2/CH_4

Ratio 4 (R4) = C_2H_6/C_2H_2

Ratio 5 (R5) = C_2H_4/C_2H_6

The first ratio method (Doernenburg; see 4.6.1) utilizes Ratios 1, 2, 3, and 4. This procedure requires significant levels of the gases to be present in order for the diagnosis to be valid.

The second method (Rogers; see 4.6.2) utilizes Ratios 1, 2, and 5. The Rogers method does not depend on specific gas concentrations to exist in the transformer for the diagnosis to be valid. However, it suggests that the method be used only when the normal limits of the individual gases have been exceeded.

4.6.1 Evaluation of Possible Fault Type by the Doernenburg Ratio Method

The Doernenburg method suggests the existence of three general fault types as discussed in Sections 2. and 3. The method utilizes gas concentrations from which Ratios 1, 2, 3, and 4 are calculated. The step-by-step procedure (flow chart) is shown in Fig 4.

The values for these gases are first compared to special concentrations—*L*1—Table 4 (see Steps 2, 3, and 4 in Fig 4)—to ascertain whether there really is a problem with the unit and then whether there is sufficient generation of each gas for the ratio analysis to be applicable. Then the ratios in the order Ratio 1, Ratio 2, Ratio 3, and Ratio 4 are compared to limiting values, providing a suggested fault diagnosis as given in Table 5. This table gives the limiting values for ratios of gases dissolved in the oil and gases obtained from the transformer gas space or gas relay.

The flow chart in Fig 4 illustrates the step-by-step application of the Doernenburg ratio method for gases extracted from the transformer oil only. Exactly the same procedure is followed for gases obtained from the gas space or gas relays, except the limiting values for the ratios will be those appropriate for gas space (Table 5).

Descriptions of the steps indicated in Fig 4:

Step 1 Gas concentrations are obtained by extracting the gases and separating them by chromatograph (see Section 7.).

Step 2 If at least one of the gas concentrations (in ppm) for H_2, CH_4, C_2H_2, and C_2H_4 exceeds twice the values for limit *L*1 (see Table 4) and one of the other three gases exceeds the values for limit *L*1, the unit is considered faulty; proceed to Step 3 to determine validity of the ratio procedure.

Copyright © 1992 IEEE All Rights Reserved

Copyright The Institute of Electrical and Electronics Engineers, Inc.
Provided by IHS under license with IEEE
No reproduction or networking permitted without license from IHS Not for Resale

Step 3 Determining validity of ratio procedure: If at least one of the gases in *each* ratio R1, R2, R3, or R4 exceeds limit *L*1, the ratio procedure is valid; otherwise, the ratios are not significant, and the unit should be resampled and investigated by alternate procedures.

Step 4 Assuming that the ratio analysis is valid, each successive ratio is compared to the values obtained from Table 5 in the order R1, R2, R3, and R4.

Step 5 If all succeeding ratios for a specific fault type fall within the values given in Table 5, the suggested diagnosis is valid.

Table 4—
Concentration of Dissolved Gas*

Key Gas	Concentrations *L*1 (ppm)
Hydrogen (H_2)	100
Methane (CH_4)	120
Carbon Monoxide (CO)	350
Acetylene (C_2H_2)	35
Ethylene (C_2H_4)	50
Ethane (C_2H_6)	65

*These values differ from Doernenburg's and coincide with Condition 1 of Table 1.

Table 5— Ratios for Key Gases—Doernenburg

	Ratio 1 (R1) CH_4/H_2		Ratio 2 (R2) C_2H_2/C_2H_4		Ratio 3 (R3) C_2H_2/CH_4		Ratio 4 (R4) C_2H_6/C_2H_2	
Suggested Fault Diagnosis	**Extracted From Oil Gas Space**		**Extracted From Oil Gas Space**		**Extracted From Oil Gas Space**		**Extracted From Oil Gas Space**	
1–Thermal Decomposition	>1.0	>0.1	<0.75	<1.0	<0.3	<0.1	>0.4	>0.2
2–Corona (Low Intensity PD)	<0.1	<0.01	Not Significant		<0.3	<0.1	>0.4	>0.2
3–Arcing (High Intensity PD)	>0.1 <1.0	>0.01 <0.1	>0.75	>1.0	>0.3	>0.1	<0.4	<0.2

4.6.2 Evaluation of Possible Fault Type by the Rogers Ratio Method

The Rogers ratio method follows the same general procedure as the Doernenburg method, except only three ratios (R1, R2, and R5) are used. This method, shown in the step-by-step flow chart (Fig 5), is also based on the thermal degradation principles described in 2.1 and 2.2. The validity of this method is based on correlation of the results of a much larger number of failure investigations with the gas analysis for each case. But, as with the Doernenburg method, the Rogers ratios can give ratios that do not fit into the diagnostic codes; therefore, other analytical methods given in 4.4 and 4.5 should be considered, as well as other options outlined in Fig 2.

Copyright © 1992 IEEE All Rights Reserved

Copyright The Institute of Electrical and Electronics Engineers, Inc.
Provided by IHS under license with IEEE
No reproduction or networking permitted without license from IHS
Not for Resale

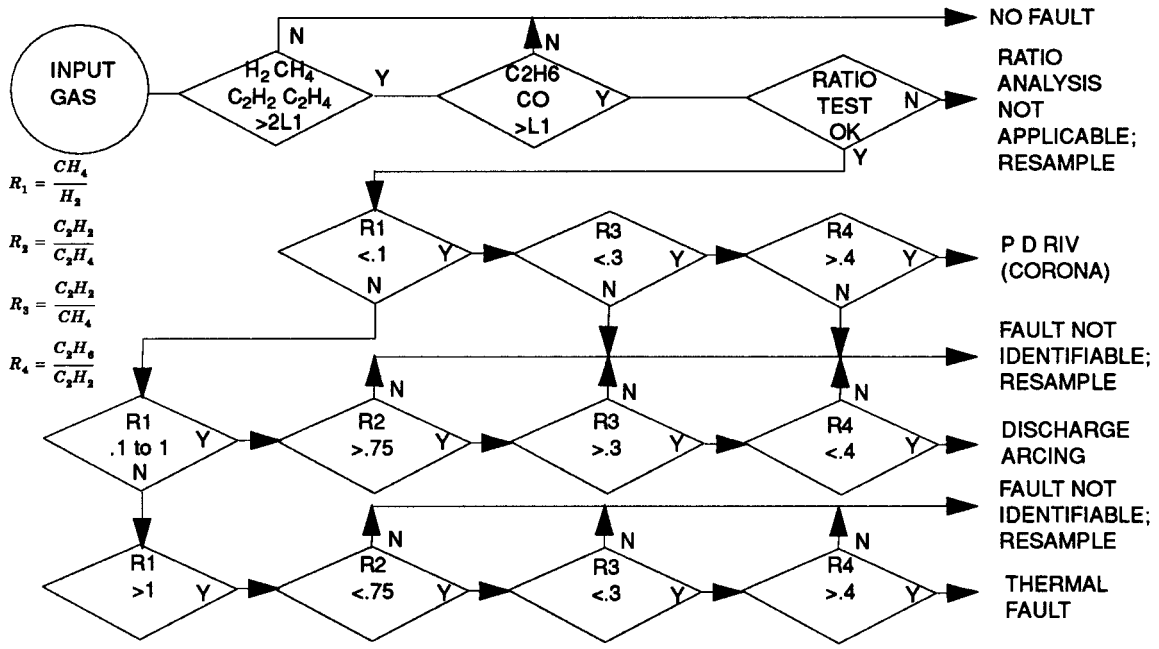

Figure 4— Doernenburg Ratio Method Flow Chart

Table 6 gives the values for the three key gas ratios corresponding to suggested diagnoses (cases). These ratios, according to Rogers, are applicable to both gases taken from the gas space (or relay) and gases extracted from the oil. The fault types (cases) given in Table 6 have been chosen by combining some cases from the number of fault types originally suggested by Rogers.

Fig 5 is a flow chart describing the step-by-step application of the Rogers ratio method.

5. Instruments for Detecting and Determining the Amount of Combustible Gases Present

5.1 Portable Instruments

Many of the gases generated by a possible malfunction in an oil-filled transformer are combustible. The on-site detection and estimation of combustible gases in the transformer in the field using a portable combustible gas meter can be the first and the easiest indication of a possible malfunction, and it may form the basis for further testing or an operating decision.

When a more accurate determination of the total amount of combustible gases or a quantitative determination of the individual components is desired, a laboratory analytical method using a gas chromatograph or mass spectrometer may be used.

Gases generated in transformers can be explosive. Strict precautions should be observed when sampling the gases from the transformer.

Copyright © 1992 IEEE All Rights Reserved

Copyright The Institute of Electrical and Electronics Engineers, Inc.
Provided by IHS under license with IEEE
No reproduction or networking permitted without license from IHS Not for Resale

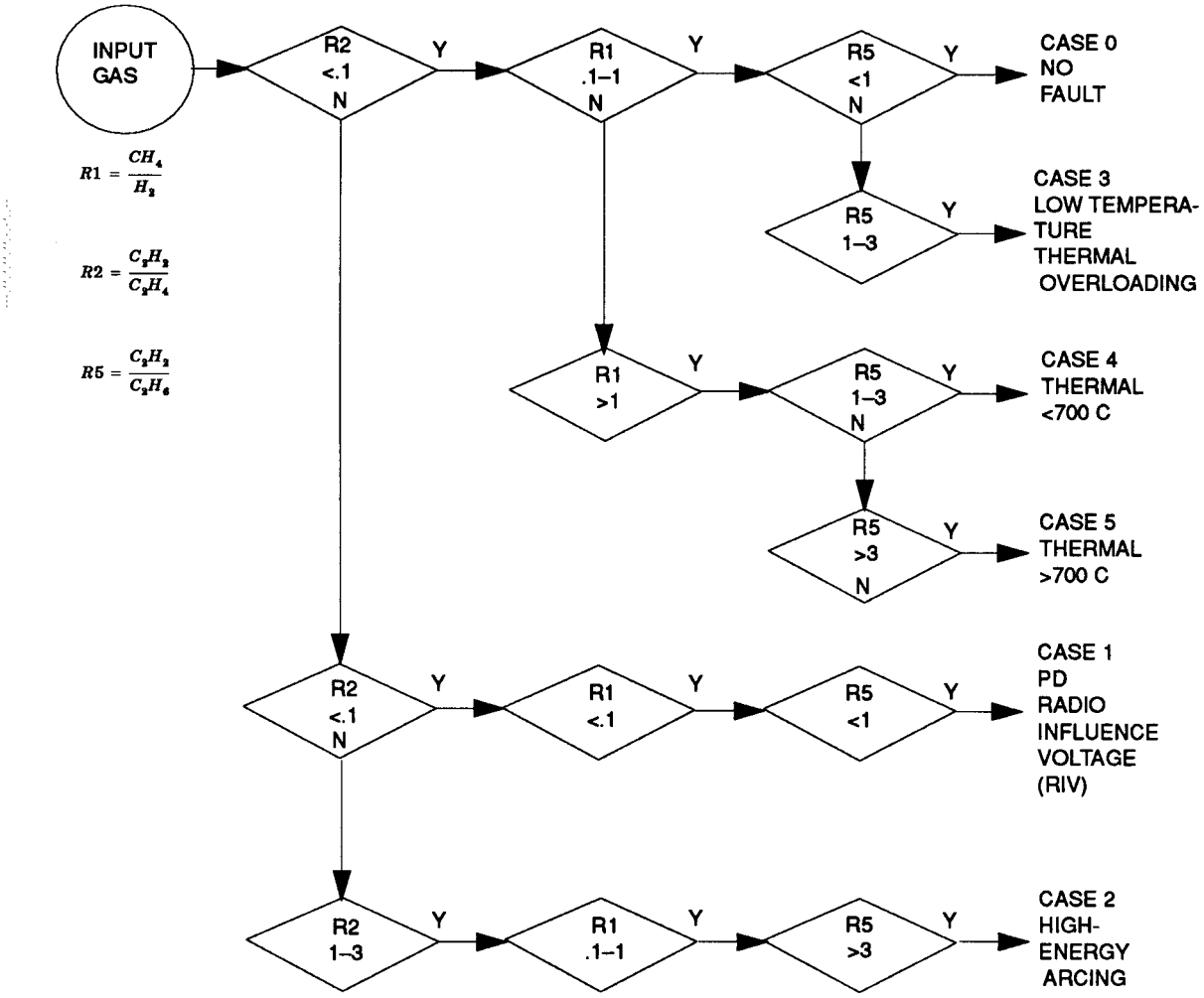

Figure 5— Rogers Ratio Method Flow Chart

5.2 Fixed Instruments

The reliability of transformers can be improved by either monitoring the gas space or the gases dissolved in the oil using self-contained, fixed-mounted instruments. These continuous monitoring instruments indicate the presence of a certain gas or the total combustible gases as well as sound an alarm when the combustible gases exceed a predetermined level. Optional recorders can also be used to provide a daily record of the combustible gases present.

If the amount of the individual gas components is desired, a laboratory analytical method using a gas chromatograph or mass spectrometer should be used.

There are three somewhat related methods of monitoring the gases, as described in the following subsections.

NOTE — There will be a tendency for the ratios R2 and R5 to increase to a ratio above 3 as the discharge develops in intensity

5.2.1 Method 1

The first type of gas monitor continually compares the thermal conductivity of the transformer gas with that of pure nitrogen and is suitable for any transformer of the closed type with a gas space above the transformer oil.

Copyright © 1992 IEEE All Rights Reserved

Copyright The Institute of Electrical and Electronics Engineers, Inc.
Provided by IHS under license with IEEE
No reproduction or networking permitted without license from IHS Not for Resale

It is calibrated with hydrogen, although the proportions of the combustibles are not obtained from the measurements.

Table 6— Rogers Ratios for Key Gases

Case	R2 C_2H_2/C_2H_4	R1 CH_4/H_2	R5 C_2H_4/C_2H_6	Suggested Fault Diagnosis
0	<0.1	>0.1 <1.0	<1.0	Unit normal
1	<0.1	<0.1	<1.0	Low-energy density arcing—PD (See NOTE)
2	0.1–3.0	0.1–1.0	>3.0	Arcing—High-energy discharge
3	<0.1	>0.1 <1.0	1.0 3.0	Low temperature thermal
4	<0.1	>1.0	1.0–3.0	Thermal <700 °C
5	<0.1	>1.0	>3.0	Thermal >700 °C

The transformer gas is continually circulated through one section of a Wheatstone bridge and returned to the transformer. The other section of the bridge contains pure nitrogen and is balanced against the transformer gas.

When combustible gases are produced in the transformer, they mix with the transformer gas and increase the thermal conductivity of the transformer gas. The increase in the thermal conductivity of the transformer gas unbalances the Wheatstone bridge, and the unbalance is proportional to the total of the combustible gases as indicated on a meter.

5.2.2 Method 2

The second type of gas monitor continuously samples the transformer gas at fixed intervals and burns any combustible gases present to provide a measure of the total of the combustible gases. This type of monitor is used only on transformers with a positive pressure of nitrogen over the oil.

At a fixed interval (usually 24 h), a sample of the transformer gas is pumped from the unit, mixed with air, and passed over a platinum heating Sensor of a Wheatstone bridge. Any combustible gas in the sample is burned. This raises the temperature of the sensor and unbalances the bridge, which was balanced against a second platinum sensor in air. The degree of unbalance is proportional to the amount of total combustible gas present in the transformer gas as indicated on a meter.

5.2.3 Method 3

The third type of gas monitor continuously measures the amount of hydrogen and other combustible gases dissolved in the transformer oil.

Hydrogen and the other combustible gases of unknown proportions diffusing through a permeable membrane will be oxidized on a platinum gas-permeable electrode; oxygen from the ambient air will be electrochemically reduced on a second electrode. The ionic contact between the two electrodes is provided by a gelled high-concentration sulfuric acid electrolyte. The electric signal generated by this fuel cell is directly proportional to the total combustible gas concentration and is sent to a conditioning electric circuit. The resulting output signal is temperature compensated.

A relay is operated in conjunction with the percent gas meter so that when the combustible gases exceed a preset value the relay sounds an alarm.

--`,,`-`-`,,`,,`,`,,`---
Copyright © 1992 IEEE All Rights Reserved

Copyright The Institute of Electrical and Electronics Engineers, Inc.
Provided by IHS under license with IEEE
No reproduction or networking permitted without license from IHS
Not for Resale

All units that have sounded an alarm should be sampled for complete analysis by a gas chromatograph or mass spectrometer.

At the time of installation and each year thereafter, the equipment should be standardized to be sure the monitor is operating properly. The operator should follow the instruction guide of the manufacturer.

6. Procedures for Obtaining Samples of Gas and Oil From the Transformer for Laboratory Analysis

6.1 Gas Samples for Laboratory Analysis

All samples of gas from the gas blanket above the oil should be taken in accordance with ASTM D3305-84 [2].

6.2 Gas Dissolved in Oil

All samples of oil from electrical apparatus being taken for the purpose of dissolved gas-in-oil analysis should be taken in accordance with ASTM D3613-87 [4].

Under certain conditions, stratification of dissolved gases in the oil may occur, and complete mixing could require many hours. In these cases, where possible, oil samples should be obtained from more than one location on the transformer.

7. Laboratory Methods for Analyzing the Gas Blanket and the Gases Extracted From the Oil

Comparative tests on essentially identical samples of oil (for instance, from the same transformer) by various laboratories have indicated a lack of precision, with the measured concentration of certain key gases reported to differ by a factor of 3 or more. The principal reason appears to be lack of uniformity in the degree, i.e., the efficiency of gas extraction. For exact and generally applicable threshold or limit values of concentrations or evolution rates of key gases, it would be necessary to obtain uniform and high (for instance, 97%) efficiencies of extraction for individual characteristic gases.

7.1 Determination of Total Dissolved Gas

Determination of total dissolved gas should be made in accordance with ASTM D2945-90 [1].

7.2 Determination of Individual Dissolved Gases

Determination of the individual dissolved gases should be made in accordance with ASTM D3612-90 [3].

7.3 Determination of Individual Gases Present in the Gas Blanket

Analysis of the individual gases present in the gas blanket above the oil may be made by using ASTM D3612-90 [3], beginning at Section 10 of that standard. Sections 13.1 and 13.2 of ASTM D3612-90 [3] are not applicable in this case.

Copyright © 1992 IEEE All Rights Reserved

Copyright The Institute of Electrical and Electronics Engineers, Inc.
Provided by IHS under license with IEEE
No reproduction or networking permitted without license from IHS Not for Resale

8. Bibliography

8.1 Sources

The sources used are:

IEE and IEEE Transactions on Power Apparatus and Systems (PA)	1939–1975
Doble Indices of Minutes of Annual International Conferences of Doble Clients	1935–1975
IEE Proceedings	1949–1972
Electrical World	1949–1969
Science Citation Index	1960–1969
Bulletin Analytique et Signaletique de France	1950–1972
Information and technical papers supplied by Members of the IEEE Transformer Committee (in particular a comprehensive list by T. K. Sloat)	
Chemical Abstracts	1969–1971
Electrical and Electronics Abstracts	1973–1975
Compendex and Inspec	1976–1987

8.2 Gas Evolution

[B1] Clark, F. M., "The Role of Dissolved Gases in Determining the Behavior of Mineral Insulating Oils," *Journal of the Franklin Institute,* vol. 215, p. 39, Jan. 1933.

[B2] Berberich, L. J., "Influence of Gaseous Electric Discharge of Hydrocarbon Oils," *Industrial and Engineering Chemistry,* vol. 30, pp. 280–228, 1938.

[B3] Murphy, E. J., "Gases Evolved by the Thermal Decomposition of Paper," *Transactions of Electrochemical Society,* vol. 83, p. 161, 1943.

[B4] Vogel, F. J., Peterson, C. C., and Matsch, L. M., "Deterioration of Transformer Oil and Paper Insulation by Temperature," *AIEE Transactions,* vol. 78, no. 1, pp. 18–21 (tables), 1951.

[B5] Worner, T., "Behavior of Insulating Oil Under Dielectric Stress with Respect to Gas Evolution and/or Absorption," (in German), *Elektrotech, Z. Dcsch,* (Nüremberg), vol. 72, no. 22, pp. 656–658, 1951.

[B6] Bruce, C. E. R. and Whitney, W. B., *Note on the Quantity and Constitution of Gas Liberated During Arcing in Oil Circuit Breakers.* British Electrical and Allied Industries, Research Association Technical Reports: G/XT35 and G/XT66 (1951) and G/T260 (1954).

[B7] Szelchely, V. G., "Relation Between Gas Evolution and the Physical Properties of Liquids," *Applied Physics,* vol. 22, p. 627, 1951.

Copyright © 1992 IEEE All Rights Reserved

Copyright The Institute of Electrical and Electronics Engineers, Inc.
Provided by IHS under license with IEEE
No reproduction or networking permitted without license from IHS Not for Resale

[B8] Basseches, H. and McClean, D. A., "Gassing of Liquid Dielectrics Under Electrical Stress," *Industrial and Engineering Chemistry*, vol. 47, no. 9, part I, pp. 1782–1794, 1955.

[B9] Paul, "Information on Hydrogen Generation by Heat Decomposition of Paper," *AIEE C.P.*, pp. 57–21, 1957.

[B10] Meador, J. R. and Dillon, N. E., "Transformer Oil Preservation," *AIEE Transactions on Power Apparatus and Systems*, vol. 33, pp. 1208–1211, 1957.

[B11] Harrison, D., "Field Method Finds Arc-Formed Gas in Oil Filled Transformers," *Electrical World*, p. 94, August 4, 1958.

[B12] Kaufman, R. B., Pierce, J. L., and Uhlig, E. R., "The Effect of Transformer-Oil-Preservation Methods on the Dielectric Strength of Oil," *IEEE PA*, vol. 34, pp. 1315–1321, 1958.

[B13] Degnan, W. J. and Doucette, G. G., "Improved Method of Oil Preservation and Its Effect on Gas Evolution," *IEEE PA*, vol. 28, pp. 657–666, 1958.

[B14] Basseches, H. and Barnes, H. W., "Gassing of Liquid Dielectric Under Electrical Stress, Influence of Voltage and Pressure," *Industrial Engineering Chemistry*, vol. 50, no. 6, pp. 959–966, 1958.

[B15] Krasucki, Z., Church, H. F., and Garton, C. G., "A New Explanation of Gas Evolution in Electrically Stressed Oil Impregnated Paper Insulation," *Journal of the Electrochemical Society*, vol. 107, no. 7, pp. 598–602, 1960.

[B16] Saito, Y. and Hino, T., "Study of Thermal Deterioration of Enameled Wires by the Mass Spectrometer Method," *IEEE PA*, vol. 50, pp. 653–657, 1960.

[B17] Rey, E. and Ehart, L., "Die Beurteilung van inhibierten und nicht inhibierten: Isolierolen für Hochspannungs-Transformatoren und Messwandler." *Bull. Ass. Swisse Elec.*, vol. 52, no. 11, p. 401, 1961.

[B18] Baguhn, A. H., Reinhard, R. E., and Oake, S. L., "Gas Generation During Interruption under Oil," *AIEE*, vol. 237, 1962.

[B19] Blodgett, R. B. and Bartlett,. S.C., "Parameters for Predicting Gassing of Oils Under Electric Stress," *IEEE PA*, vol. 55, pp. 528–536, 1961.

[B20] Dakin, T. W. and Sloat, T. K, "Gas Generation and Its Relation to the Dielectric Strength of Oil," *Electrical Insulation Conference (IEEE)*, 1963, pp. 130–133.

[B21] Sheppard, H. R., "The Mechanism of Gas Generation in Oil-Filled Transformers," *Doble Conference Index of Minutes*, 1963, Sec. 6-601.

[B22] Hornsby, E. A., Irving, R., and Patterson, E. A., "New Criterion of the Gassing Tendencies of Insulating Oils," *Proceedings of the Institution of Electrical Engineers*, vol. 112, no. 3, pp. 590–596, March 1965.

[B23] Zaky, A. S. and Hawley, R., "Gas Evolution from Insulating Oils," *Electrical Review*, vol. 3, p. 828, June 1966.

[B24] Brzuska, L. and Widmann, W., "Zur Prufung der Gasfestigkeit von Isolierolen und Isolierungen, *Elektrotech. Z.*, pt. A, vol. 88, no. 3, p. 69, 1967.

[B25] Sloat, T. K, Johnson, J. L., and Sommerman, G. M. L., "Gas Evolution from Transformer Oils under High Voltage Stress," *IEEE Transactions on Power Apparatus and Systems*, vol. PA-86, no. 3, p. 374, 1967.

[B26] Pedersen, G., "Gassing of Insulating Oils under the Influence of an Electric Discharge," *Brown Boveri Review*, vol. 55, no. 415, pp. 222–228, April/May 1968.

Copyright © 1992 IEEE All Rights Reserved

Copyright The Institute of Electrical and Electronics Engineers, Inc.
Provided by IHS under license with IEEE
No reproduction or networking permitted without license from IHS Not for Resale

[B27] Morrison, E. L., "Evaluation of Thermal Stability of Electrical Insulating Paper," *IEEE Transactions on Electrical Insulation,* vol. EI-3, pp. 76–82, August 1968.

[B28] Lipsey, G. F. and Ettlinger, L. T., "Permalex II Insulation System," *IEEE Electrical Insulation Conference Proceedings,* pp. 150–151, 1969.

[B29] Varshavskij, D. S., "Influence de la Valeur Speifique du Degagement Gazeux sur la Duree de Vie Descondensateurer au Papier Huile," *Izvestia Vysshikh Uchebnykh Zavendenii-Elekcomrkhanika,* no. 7, pp. 800–803, 1970.

[B30] Gusev, N. I., "Gas Shielding of a Transformer," *Energetik.,* vol. 10, p. 24, 1970.

[B31] Forster, J. A. and McCrae, G. G., "Gassing Tendency Tests on Service-Aged Insulating Oils," *Doble Conference Proceedings,* 1974, Sec. 10-1501.

8.3 Detection and Interpretation

8.3.1 Gas Detector Relay

[B32] Bucholz, M., "The Bucholz Protective System and its Practical Applications," *Elektrotech. Z.,* vol. 49, pp. 1257–1261, 1928, (In German).

[B33] "Preliminary Report of Subcommittee on Gas Detector Relays," listed in *Advance Report for the 56th Annual Meeting of Canadian Electrical Association Engineering Section,* p. 39, June 1946.

[B34] AIEE Relay Subcommittee, "Relay Protection of Power Transformers.," *AIEE Transactions,* vol. 66, pp. 911–917, 1947.

[B35] Gross, E. T. G., "Simplicity in Transformers Protection, *Electrical Engineering,* vol. 66, pp. 564–569, June 1947."

[B36] Madill, J. T., "Typical Transformer Faults and Gas Detector Relay Protection," *AIEE Transactions,* vol. 66, pp. 1052–1060, 1947.

[B37] "Nipping Incipient Faults," editorial, *Electrical World,* vol. 128, p. 68, July 5, 1947.

[B38] Gudmundsson, E., "Auxiliary Apparatus for Service Supervision and Maintenance of Transformers," *Journal of the ASEA* (Sweden), vol. 22, no. 10, pp. 159–167, 1949.

[B39] Streuli, W. R., "Tranfoscope (Gas Actuated Transformer Protective Relay of Buchholz Type," *Doble Conference Index of Minutes,* 1949, Sec. 6-01.

[B40] Duffy, F. H., "Gas Detector Relay Experience on Saguenay System," *Doble Conference Index of Minutes,* 1951, Sec. 6-501.

[B41] Bean, R. L. and Cole, H. L., "A Sudden Gas Pressure Relay for Transformer Protection," *AIEE Transactions,* vol. 72, no. 3. pp. 480–483, 1953.

[B42] Rossier, C. "Design of Large Power Transformers," Bull. Secheron (Suisse), no. 25F, pp. 9–25, 1956.

[B43] Howe, V. H., Massey, L., and Wilson, A. C. M., "The Identity and Significance of Gases Collected in Buchholz Protectors," *The Metropolitan Vickers Gazette,* Manchester, England, vol. 27, pp. 138–148, 296, 1956.

 Copyright © 1992 IEEE All Rights Reserved

Copyright The Institute of Electrical and Electronics Engineers, Inc.
Provided by IHS under license with IEEE
No reproduction or networking permitted without license from IHS Not for Resale

[B44] Aptov, I. S., "Determination of the Character of Defects Inside Transformers from the Composition of Gas Evolved in the Gas Relay," *British Electric and Alied Industries Research Associations Transaction 1BI532,* pp. 1–6, June 18, 1957.

[B45] Harrison, D., "Transformer Gas Testing," *Ontario Hydro Research News,* vol. 9, no. 4, pp. 11–15, 1957.

[B46] Sterner, V., "Report an the Work of the Study Group on Protection and Relaying. Part II: The Protection of Large Transformers," *CIGRE C. R. Transactions (18th Session),* 24 X 16, no. 334, pp. 8–13, Paris, 1960.

[B47] Vanlund, J. A., "General Electric Transformers," *Doble Conference Index of Minutes,* 1961, Sec. 6-301.

[B48] Sturtevant, D. B., "Experience with Buchholz Gas-Operated Relay," *Doble Conference Index of Minutes,* 1964, Sec. 6-101.

[B49] Seiler, H., "Gas Test Device for Protection of Transformer," *Electrotech. Z,* vol. 19, no. 5, pp. 113–116, 1967.

[B50] McDermid, W., "Generation of Combustible Gas in 230 kV Oil-Filled Current Transformers," *Doble Conference Index of Minutes,* 1968, Sec. 6-301.

8.3.2 Gas Cushion in Sealed Transformers

[B51] Wagner, H. H., "Method Detects Incipient Power Transformer Faults," *Electrical World,* p. 80, Dec. 1959.

[B52] Wagner, H. H., "Detection of Incipient Faults in Power Transformers by Gas Analysis," *Doble Conference Index of Minutes,* 1960, Sec. 6-801.

[B53] Pugh, P. S. and Wagner, H. H., "Detection on Incipient Faults in Transformers by Gas Analysis," *AIEE C.P.,* pp. 60–950, 1960.

[B54] Wagner, H. H., "Gas Analysis Detects Incipient Faults," *Electrical World,* pp. 114, June 20, 1960.

[B55] Pugh, P. S. and Wagner, H. H., "Detection of Incipient Faults in Transformers by Gas Analysis," *AIEE Transactions,* vol. 80, pp. 189–195, 1961.

[B56] Wagner, H. H., "Experience with Transformer Gas-Fault Detector Testings," *Doble Conference Index of Minutes,* 1961, Sec. 6-701.

[B57] Horelick, A. L., "Incipient Fault Detection Method Proves Valuable for Transformer Protective Maintenance," *Transmission and Distribution,* p. 34, Jan. 1961.

[B58] Bore, Gordon and Reichart, "Incipient Transformer Faults Quickly Detected," *Electrical World,* vol. 155, pp. 80–83, April 24, 1961.

[B59] Wagner, H. H., "Pennsylvania Transformers," *Doble Conference Index of Minutes,* 1961, Sec. 6-701.

[B60] Duke, C. A. and Taylor, R. O., "Detection of Combustible Gases in Nitrogen Sealed Power Transformers," *Doble Conference Index of Minutes,* 1962, Sec. 6-101.

[B61] Gronberg, W. L., "Detection of Incipient Power Transformer Faults with Combustible Gas Jet," *Doble Conference Index of Minutes,* 1962, Sec. 6-301.

[B62] Wagner, H. H., "Field Experiences with the Transformer Fault Gas Detector," *Doble Conference Index of Minutes, 1962,* Sec. 6-601.

Copyright © 1992 IEEE All Rights Reserved

Copyright The Institute of Electrical and Electronics Engineers, Inc.
Provided by IHS under license with IEEE
No reproduction or networking permitted without license from IHS Not for Resale

[B63] Taylor, R. O., “TVA's Experiences in Analyzing Combustible Gases in Nitrogen Sealed Power Transformers,” *AIEE C.P.*, pp. 62–528, 1962.

[B64] Rickley, A. L. and Clark, R. E., “Combustible Gas Detection in Transformers,” *Doble Conference Index of Minutes,* 1963, Sec. 6-501.

[B65] Taylor, R. O., “Combustible Gas Tests Warn of Transformer Failures,” *Electrical World,* pp. 74–75, April 22, 1963.

[B66] Barrett, R. D. and Parker, J. C., “Experience in Testing Nitrogen in Oil-Filled Transformers,” *Doble Conference Index of Minutes,* 1963, Sec. 6-201.

[B67] Cromley, R. J., “Failure and Repair of a Transformer Joint,” *Doble Conference Index of Minutes,* 1963, Sec. 6-701.

[B68] Vanlund, J. A., “Gas Analysis for Detection of Incipient Power Transformer Faults,” *Doble Conference Index of Minutes,* 1963, Sec. 6-401.

[B69] Vora, J. P. and Alcher, L. C., “Incipient Transformer Fault Detection and Interpretation,” *IEEE C.P.*, pp. 63–584, 1963.

[B70] Bellaschi, P. L., “Introduction to Symposium on Gas Analysis for Detection of Incipient Faults in Power Transformers,” *Doble Conference Index of Minutes,* 1963, Sec. 6-101.

[B71] Horelick, A. L., Wagner, H. H., and Lynch, J. C., “Method for Testing Electrical Instrumentalities for Incipient Faults,” U.S. Patent No. 3 111 388, November 19, 1963.

[B72] Wagner, H. H., “Pennsylvania Transformer Total Combustible Gas (TCG), Incipient Fault Detector,” *Doble Conference Index of Minutes,* 1963, Sec. 6-302.

[B73] Wagner, H. H., “Progress Report on TCG Incipient Fault Detector Practice,” *IEEE C.P.*, pp. 63–585, 1963.

[B74] Syrjamaki, E. M., “Calibration and Comparison of Fault Gas Detectors,” *Doble Conference Index of Minutes,* 1964, Sec. 2-101.

[B75] Ferguson, M. L., “Combustible Gas Analysis as a Preventive Maintenance Tool,” *Doble Conference Index of Minutes,* 1964, Sec 6-1801.

[B76] Duke, C. A., Goodroe, C. R., Taylor, R. O., and Thompson, W. W., “Detection of Combustible Gases in Nitrogen Sealed Power Transformers,” *Doble Conference Index of Minutes,* 1964, 6-1001.

[B77] Wagner, H. H., “Development of Continuous Monitoring Total Combustible Gas (TCG) Incipient Fault Detector,” *Doble Conference Index of Minutes,* 1964, Sec. 6-1901.

[B78] Crawford, C. E. and Wilson, A. E., “Incipient Transformer Fault Detected by Combustible Gas Monitoring Program and Ultra Sound Tests,” *Doble Conference Index of Minutes,* 1964, Sec. 6-1201.

[B79] Wagner, H. H., “Survey of TCG Tests on Transformers,” *IEEE C.P.*, pp. 6–4209.

[B80] Parker, J. C., “Testing Nitrogen Over Oil in Power Transformers,” *Doble Conference Index of Minutes,* 1964, Sec. 6-1501.

[B81] Ferguson, M. L., “Combustible Gas Problem,” *Doble Conference Index of Minutes,* 1965, Sec. 6-401.

Copyright © 1992 IEEE All Rights Reserved

Copyright The Institute of Electrical and Electronics Engineers, Inc.
Provided by IHS under license with IEEE
No reproduction or networking permitted without license from IHS Not for Resale

[B82] Graham, W. R. and Riner, R. B., "Incipient Fault Detection in Power Transformers," *Doble Conference Index of Minutes,* 1965, Sec. 6-201.

[B83] Wagner, H. H., "Five Years Experience with Transformer TCG Incipient Fault Detector Tests," *IEEE Transactions on Power Apparatus and Systems,* vol. PAS-84, no. 8, pp. 700–706, 1965.

[B84] Vora, J. P. and Aicher, L. C., "Transformer Fault Gas Analysis Interpretation," *IEEE Transactions on Power Apparatus and Systems,* vol. PAS-84, no. 2, pp. 172–176, discussion on p. 487, 1965.

[B85] Thomas, D. J., "Combustible Gas in Power Transformers (Its Detection and Significance)," *Doble Conference Index of Minutes,* 1966, Sec. 6-1010.

[B86] Gochmauer, E. L., "TCG Analysis of Incipient Fault Forecasted," *Doble Conference Index of Minutes,* 1966, Sec. 6-201.

[B87] Price, R. C., "Transformer Failure at the Allen Steam Plants, *Doble Conference Index of Minutes,* 1966, Sec. 6-301."

[B88] Rose, M., "Automatic Sampling and Measurement of Combustible Gases in Transformers," *Doble Conference Index of Minutes,* 1967, Sec. 6-801.

[B89] Thompson, W. W., "Modification of Conservator Transformers to Permit Combustible Gas Surveillance," *Doble Conference Index of Minutes,* 1967, Sec. 6-601.

[B90] Wagner, H. H., "Pennsylvania TCG Transformer Fault-Gas Continuous Monitor," *Doble Conference Index of Minutes,* 1967, Sec. 6-701.

[B91] Sheppard, H. R., "Dangerous Conditions Are Detected by Analyzing Transformer Gases," *Transmission and Distribution,* vol. 20, no. 2, pp. 71–74, 1968.

[B92] Hahn, J. H., "Field Untanking and Repair of a 230/115 kV, 40/50, 3/66.7 MVA, OA/FA/ FA, Autotransformers," *Doble Conference Index of Minutes,* 1968, Sec. 6-101.

[B93] McDermid, W., "Generation of Combustible Gas in 230 kV Oil-Filled Current Transformers," *Doble Conference Index of Minutes,* 1968, Sec. 6-301.

[B94] Sheppard, H. R., "Why is Gas Generated in Oil-Filled Transformers" *Transmission and Distribution,* vol. 20, no. 1, pp. 63–65, 1968.

[B95] Gillies, D. A. and Muckerhelde, L. H., "Combustible Gas Monitoring—500 kV Current Transformers," *Doble Conference Index of Minutes,* 1973, Sec. 6-201.

8.3.3 Dissolved Gas in Transformer Oil

[B96] Clark, F M., "The Role of Dissolved Gases in Determining the Behavior of Mineral Insulating Oils," *Journal of the Franklin Institute,* vol. 215, no. 1, p. 39, 1933.

[B97] Dornenberg, E. and Gerber, O. E., "Analysis of Dissolved and Free Gases for Monitoring Performance of Oil-Filled Transformers," *Brown Boveri Review,* vol. 54, no. 213, p. 104, 1967.

[B98] Stamm, H. and Schulze, W., "Deterioration of Insulators Consisting of Paper-Oil Layers and its Study by Gas Chromatography," presented at CIGRE, Paper 12–14, 1968.

Copyright © 1992 IEEE All Rights Reserved

Copyright The Institute of Electrical and Electronics Engineers, Inc.
Provided by IHS under license with IEEE
No reproduction or networking permitted without license from IHS Not for Resale

[B99] Sheppard, H. R., "Why is Gas Generated in Oil-Filled Transformers?" *Transmission and Distribution*, pp. 63–65, Jan. 1968.

[B100] Strom, R. and Takahashi, S., "Analysis of Fault Gases in Transformer Oil by Improved Method of Gas Chromatography," *Ontario Research Quarterly, second quarter*, pp. 21–25, 1968.

[B101] Hahn, J. H., "Field Untanking and Repair of a 230/115 kV, 40/50, 3/66.7 MVA, OA/FA/FA Autotransformer," *Doble Conference Index of Minutes*, 1968, Sec. 6-101.

[B102] Thibault, M. and Galand, J., "Modern Physical Chemistry Methods for Analysis of Insulation Degradation in Service", *Review Generale de l'Electricite*, vol. 78, no. 3, pp. 301–302, 1969.

[B103] Waddington, F. B. and Allan, D. J., "Transformers Fault Detection by Dissolved Gas Analyses," *Electrical Review*, pp. 751–755, May 23, 1969.

[B104] Coltong, R., "Combustible Gas Testing on Large Oil-Filled Transformers," *Electrical Insulation Conference 69C 33E1-37*, pp. 115–118, 1969.

[B105] Muller, R., Potthoff, K., and Soldner, K., "Analyse des Gas Dissous dans l'Huile en Tant que Moyen de Surveillance des Transformateurs et de Detection de Defaults Naissants," presented at CIGRE, Paper 12-02, 1970.

[B106] Fallou, B., Viale, F., Devaux, A., Fournie, R., Galand, J., Vuarches, P., Davies, I., Rogers, R. R., Reynolds, E. H., and Dornenburg, E., "Application des Methodes d'Analyse Physico-Chimiques à l'Etude des Degradations dans l'Isolation des Materiels Electriques," presented at CIGRE, Paper 15-07, 1970.

[B107] Moraru, D., Popesco, C., Stoica, M., and Tanasesco, F. I, "Detection des Degradations Produites par des Decharges Partielles pour les Types d'Isolation Papier-Huile," presented at CIGRE, Paper 15-05, 1970.

[B108] Wilputte, R., "Contribution a l'Etude de l'Evolution de Gas dans les Isolants Liquides et Solides Soumis a l'Action de Contraintes Electriques," presented at CIGRE, Paper 15-03.

[B109] Beer, G., Onerti, A., Bossi, A., Hirra, C., "Contribution experimentale à l'etude de la degradation produits par les descharges partielles dans le papier isolant impregne à l'huile," presented at CIGRE, Paper 15-02, 1970.

[B110] Discussion of Papers from Group 15 (Insulating Material), presented at CIGRE, 1970.

[B111] Lindeman, K., "Analyze Transformer Gas To Identify Faults," *Power*, vol. 114, no. 4, p. 74, 1970.

[B112] "Detection of Developing Damage in Transformer," *Gorchakova Elek. Sta.*, vol. 41, no. 4, p. 51, 1970.

[B113] Ishii, T. and Namba, S., "Les Gaz Produits Lors de la Deterioration de l'Isolation des Transformateurs," *Journal of the Institute of Electrical Engineers of Japan*, vol. 90, no. 5, p. 910, 1970.

[B114] Dind, J., Daoust, R., Regis, and Morgan, J., "Analysis of Gases Dissolved in Transformer Oil," *Doble Conference Index of Minutes*, vol. 38, AIC71, 1971, Sec. 6-1101.

[B115] Morgan-Schaffer Corporation, *Transformer Fault Detection Service*

[B116] Collins, R. L., "Hydrogen Detector," US Patent 3 559 457, 1971.

[B117] Stoll, P. and Vuillemier, C., "Une Methode Chromatographique de Mesure Absolue de CO_2 dans l'Huille des Transformateurs," *Bull. Ass. Suisse Elec.*, vol. 62, no. 23, p. 1113, 1971.

 Copyright © 1992 IEEE All Rights Reserved

--`,,`-`-`,,`,,`,`,,`---

Copyright The Institute of Electrical and Electronics Engineers, Inc.
Provided by IHS under license with IEEE
No reproduction or networking permitted without license from IHS Not for Resale

[B118] Hino, T. and Suganuma, Y., "Rapid Measurement of the Deterioration of Oil-Immersed Paper," *Electrical Insulation Conference,* 71 C 38EI-41,129, 1971.

[B119] Davies, I., "Composition of the Gases Formed in Electrical Insulating Oils," *Journal of Applied Chemistry and Biotechnology,* vol. 21, p. 194, 1971.

[B120] Thibault, M. and Galand, J., "Methodes Physico-Chimiques d'Etude de Degradations en Service," *Rev. Gen. Elec.,* vol. 80, no. 1, p. 46, Jan. 1971.

[B121] Thibault, M. and Galand, J., "Methodes Physico-Chimiques d'Etude de Degradation en Service," *Rev. Gen. Elec.,* vol. 81, no. 1, p. 48, 1972.

[B122] Daoust, R., "Analysis of Gases Dissolved in Transformer Oils," *Doble Conference Index of Minutes,* vol. 39, AIC71,1972, Sec. 10-601.

[B123] McCrae, G. G., "Experience with Incipient Faults Detection by Gas-in-Oil Analysis," *Doble Conference Index of Minutes,* vol. 39, 1AC72, 1972, Sec. 6-701.

[B124] Hardy, Hurworth, and Robinson, "Diagnostic Testing of Transformer Insulation by Gas-in-Oil Analysis," presented at SUPEC 72 Conference, University of Bradford, 1972.

[B125] "Gas Analysis as an Aid to Transformer Fault Location," *Electric Times,* vol. 161, no. 5, p. 46, 1972.

[B126] Cameron, D. I., "Gas-in-Oil Analysis: A Tool for Early Warning of Equipment Trouble," presented at CEA, Spring 1972.

[B127] Barraclough, B., Bayley, E., Davies, I., Robinson, K., Rogers, R. R., and Shanks, E., "CEGB Experience of the Analysis of Dissolved Gas in Transformer Oil for the Detection of Incipient Faults," In *IEE Conference Publication,* no. 94, Sec. 1, Part 2, March 1973.

[B128] Ballaschi, P. L., "Application of Fault-Gas Detection Methods on Transformer Test at the Factory," *Doble Conference Index of Minutes,* 1973, Sec. 10-301.

[B129] Pugh, D. R., "Combustible Gas Analysis," *Doble Conference Index of Minutes,* 1973, Sec. 10-401.

[B130] Martin, W. B. Jr., and Taylor, R. O., "Experience with Chromatographic Analysis of Fault Gases in Power Transformers," *Doble Conference Index of Minutes,* 1973, Sec. 10-201.

[B131] Booker, J. R., "Experience with Incipient Fault Detection Utilizing Gas Chromatography Analysis," *Doble Conference Index of Minutes,* 1973, Sec. 10-501.

[B132] Raab, E. L., "Symposium on Gas Chromatography," *Doble Conference Index of Minutes,* 1973, Sec. 10-501A.

[B133] Yamaok, M. et al., "GIO Analyser (Auto-Analyser for Gases in Oil)," *Fuji Electr. Rev.* (Japan), vol. 19, no. 2, pp. 83–86, 1973.

[B134] Smirnov, M. A. et al., "Gas-Content of the Oil in Working Transformers," *Elektr. Stantsii* (Rus.), no. 8, pp. 57–60, 1973.

[B135] Pugh, D. R., "Advances in Fault Diagnosis by Combustible Gas Analysis," *Doble Conference Index of Minutes,* 1974, Sec. 10-1201.

[B136] Beeler, G., "Combustible Gas Analysis on Peach Bottom No. i Transformer," *Doble Conference Index of Minutes,* 1974, Sec. 10-1401.

Copyright © 1992 IEEE All Rights Reserved

Copyright The Institute of Electrical and Electronics Engineers, Inc.
Provided by IHS under license with IEEE
No reproduction or networking permitted without license from IHS Not for Resale

[B137] Keene, D. J., “Transformer Problem Detected by Fault-Gas Analysis,” *Doble Conference Index of Minutes*, 1974, Sec. 10-1301.

[B138] Duval, M., “Fault Gases Formed in Oil-Filled Breathing E.H.V. Transformers; Interpretation of Gas Analysis Data,” *IEEE C.P.*, no. C 74, pp. 476–478, 1974.

[B139] Dornenburg, E. and Strittmatter, W., “Monitoring Oil Cooled Transformers by Gas Analysis,” *Brown Boveri Review*, vol. 61, no. 5, pp. 238–247, May 1974.

[B140] Muller, R., Schliesing, H., and Soldner, K., “Testing and Supervision of Transformers by Analysis of the Gases Dissolved in the Oil,” *Elektrizitaetswirtschaft* (Germany), vol. 73, no. 239, pp. 683–687, 1974.

[B141] “Discussion From Group 15 (Insulating Materials),” *CIGRE Conference Proceedings*, vol. I, 1974.

[B142] Rogers, R. R., “U.K. Experience in the Interpretation of Incipient Faults in Power Transformers by Dissolved Gas-In-Oil Chromatographic Analysis,” *Doble Conference Index of Minutes*, 1975, Sec. 10-201.

[B143] Armstrong, G. W. Jr., and Baker, A. E., “Transformer Problems Detected or Confirmed by Use of Combustible Gas Analysis,” *Doble Conference Index of Minutes*, 1975, Sec. 10-301.

[B144] Dvoracek, E. and Walla, J., “Analysis of Gases Dissolved in Transformer Oils,” *Energetika*, vol. 15, no. 1, pp. 8–11, Jan. 1975.

[B145] Pejovic, V. and Bojkovic, A, “Control of Transformer Insulation Systems by Gas Analysis,” *Teknika* (Yugoslavia), vol. 30, no. 5, pp. 5–8, 1975.

[B146] Thibault, M. and Rabaud, J., “Application of the Analysis of Dissolved Gases to the Maintenance of Transformers,” *Rev. Gen. Elec.*, vol. 84, no. 2, p. 21, Feb. 1975.

[B147] Dind, J. E. and Regis, J., “How Hydro-Quebec Diagnoses Incipient Transformer Faults by Using Gas-in-Oil Analysis,” *Pulp Paper Can.*, vol. 76, no. 9:T264, Sept. 1975.

[B148] Davies, I. A., “Review of Methods for Examining the Analysis of Gases in Oil Filled Electrical Equipment, With Observations on the Concentrations Found and Their Dependence an Time,” *C.E.G.B.*, Paper No. SSD/SE/RR/68/75.

[B149] Hubacher, E. J., “Analysis of Dissolved Gas in Transformer Oil to Evaluate Equipment Condition,” P.C.E.A. Engineering and Operation Section Spring Conference, March 1976.

[B150] Tsukioka, H., Sugawara, K, Mori, E., Hukumori, S., and Sakai, S., “New Apparatus for Detecting H(2), CO, and CH(4) Dissolved in Transformer Oil,” *IEEE Transactions on Electrical Insulation*, vol. EI-18, no. 4, pp. 409–419, Aug. 1983.

[B151] Lampe, W., Spicar, E., and Carrender, K, “Gas Analysis as a Means of Monitoring Power Transformers,” *ASEA Journal (Allmaenna Svenska Elektrisha Aktiebolaget)*, vol. 52, no. 2, pp. 39–42, 1979.

[B152] DiGiorgio, J. B., Jakob, E, and Haupert, T., “Transformer Fault Gas Analysis,” minutes of the meeting of Pennsylvania Electr. Assoc. Eng. Sect. Electr. Equip. Comm., Bedford, PA. Oct. 18-19, 1977. Published by Pennsylvania Electr. Assoc. Eng. Sect., Harrisburg, p. 22, 1977.

[B153] Aiyar, D. and Nanda, J. R., “Identification and Estimation of Gases Dissolved in Electrical Insulating Oil by Gas Chromatography,” *Electric India*, vol. 16, no. 9, pp. 17–21, May 15, 1976.

Copyright © 1992 IEEE All Rights Reserved

--`,,`-`-`,,`,,`,`,,`---

Copyright The Institute of Electrical and Electronics Engineers, Inc.
Provided by IHS under license with IEEE
No reproduction or networking permitted without license from IHS Not for Resale

[B154] Tsukioka, H., Sugawara, K., More, E., Hukumori, S., and Sakai, S., "New Apparatus for Detecting H_2, CO, and CH_4 Dissolved in Transformer Oil," *IEEE Transformer Electrical Insulation* (USA), vol. EL-18, no. 4, pp. 409–419, Aug. 1983.

[B155] Surakka, M. L., "Gas Analysis of Oil Monitors Transformer Condition," *Modern Power Systems* (USA), vol. 3, no. 4, pp. 60–61, April 1983.

[B156] Surakka, M. L. and Jaakkola, V. K, "Gassing Properties of Transformer Oils," Presented at Nordisk Isolation Symposium, 1982, Odense, Denmark. Published: ASEA, Stockholm, Sweden.

[B157] Kelly, J. J. and Myers,. S. D., "The Value of Gas-in-Oil Analysis as a Guide to the Operational Conditions Existing in a Power Transformer," Conference Record of the 1972 Thirty-Fourth Annual Conference of Electrical Engineering Problems in the Rubber and Plastics Industries.

[B158] Yamada, H., Nomura, Y., Katayma, Y., Ishii, T., Imamura, O., and Isuchiyama, K., "Automatic Field Monitoring of Dissolved Gas in Transformer Oil," *IEEE Transformer Power Apparatus and Systems* (USA), vol. PAS-100, no. 4, pp. 1538–1544, April 1981.

[B159] Brasel, E. and Langecker, K., "Extraction of the Gas Dissolved in the Transformer Oil," *Elektrie* (Germany), vol. 34, no. 12, pp. 637–641, 1980.

[B160] Kan, H., "Automatic Dissolved-Gas Analyzers for Transformer Monitoring," *Mitsubishi Electric Adv* (Japan), vol. 12, pp. 8–10, June 1980.

[B161] Groves, B. C. and Brinkworth, D. C., "On-Line Gas-in-Oil Monitor," *CEGB Technical Disclosure Bulletin* (GB), no. 349, pp. 1–2, June 1980.

[B162] Kelly, J. J., "Transformer Fault Diagnosis by Dissolved-Gas Analysis," presented at IEEE 26th Annual Petroleum and Chemical Industry Conference, pp. 145–151, 1979. San Diego, CA, Sept. 10–12, 1979.

[B163] Rogers, R. R., "IEEE and IEC Codes to Interpret Incipient Faults in Transformers Using Gas-in-Oil Analysis," *IEEE Transformer Electrical Insulation* (USA), vol. EI-13, no. 5, pp. 349–354, Oct. 1978

[B164] Belanger, G. and Duval, H., "Monitor for Hydrogen Dissolved in Transformer Oil," *IEEE Transformer Electrical Insulation* (USA), vol. EI-12, no. 5, pp. 334–340, Oct. 1977.

[B165] Kauffman, G. H., "Gas Bubbles in Distribution Transformers," *IEEE Transformer Power Apparatus and Systems* (USA), vol. PAS-96, no. 5, pp. 1596–1601, Sept.–Oct. 1977.

[B166] Shirai, H., Shimoji, S., and Ishii, T., "Thermodynamic Study on the Thermal Decomposition of Insulating Oil," *IEEE Transformer Electrical Insulation* (USA), vol. EI-12, no. 4, pp. 272–280, Aug. 1977.

[B167] Muller, R., Schliesing, H., and Soldner, K, "Assessing the Operational State of Transformers by Gas Analysis," *Elektrizitaetswirtschaft* (Germany), vol. 76, no. 11, pp. 345–349, May 23, 1977.

[B168] Glass, R. H., "Dissolved Gas Analysis of Transformer Oil," *Transmission and Distribution* (USA), vol. 29, no. 1, pp. 22–24, 26, 28–29, Jan. 1977.

[B169] Dornenburg, E. and Hutzel, O., "Operational Supervision by Testing the Insulating Oil," *Elektrotech. Z. A* (Germany), vol. 98, no. 3, pp. 211–215, March 1977.

[B170] Heinrichs, F. W., "The Impact of Fault-Detection Methods and Analysis on the Transformer Operating Decision," presented at IEEE/PES Transmission and Distribution Conference, Paper 86 T & D 559-9, Anaheim, California, Sept. 1986.

Copyright © 1992 IEEE All Rights Reserved

--`,,`,,`-`-`,,`,,`,`,,`---
Copyright The Institute of Electrical and Electronics Engineers, Inc.
Provided by IHS under license with IEEE
No reproduction or networking permitted without license from IHS Not for Resale

[B171] Haupert, T. J., Jakob, E, DiGiorgio, J., and Sperry, M., “Use of Transformer Oil Analysis for Reducing Equipment Failures,” *Electrical World,* vol. 192, no. 7, 1979.

[B172] Jakob, F., Haupert, T. J., and DiGiorgio, J., “Cut Failures by Analyzing Transformer Oil,” *Electrical World,* pp. 52–54, Oct. 1, 1979.

[B173] Jakob, F., Haupert, T. J., and DiGiorgio, J., “New Technique Pinpoints Fault Locations,” *Electrical World,* pp. 119–121, May 1981.

[B174] Church, J. O., Haupert, T. O., Jakob, F., “Analyze Incipient Faults with Dissolved Gas Nomograph,” *Electrical World,* Oct. 1987.

[B175] Haupert, T. O. and Jakob, F., “A Review of the Operating and Practice of Dissolved Gas Analysis,” *Electrical Insulation Oils*, STP 998, pp. 108–115, 1928.

[B176] Haupert, T. O., Jakob, F., and Hubacher, E.J., “Application of a New Technique for the Interpretation of Dissolved Gas Analysis Data,” *11th Annual Technical Conference of the International Electrical Testing Association,* pp. 43–51, 1989.

Copyright © 1992 IEEE All Rights Reserved

Copyright The Institute of Electrical and Electronics Engineers, Inc.
Provided by IHS under license with IEEE
No reproduction or networking permitted without license from IHS

Not for Resale