IEEE Std C37.96-2000
Revision of IEEE Std C37.96-1988

IEEE Guide for AC Motor Protection

Sponsor

Power System Relaying Committee
of the
IEEE Power Engineering Society

Approved 30 March 2000

IEEE-SA Standards Board

Abstract: Generally accepted methods of protection for ac motors are provided. This guide identifies and summarizes the functions necessary for adequate protection of motors based on type, size, and application. This guide does not purport to detail the protective requirements of all motors in every situation.
Keywords: ac motor protection, adjustable-speed drive motor protection, induction motor protection, microprocessor-based motor protection, motor, rotating machinery protection, synchronous motor protection, wound rotor motor protection

---

The Institute of Electrical and Electronics Engineers, Inc.
3 Park Avenue, New York, NY 10016-5997, USA

Copyright © 2000 by the Institute of Electrical and Electronics Engineers, Inc.
All rights reserved. Published 12 September 2000. Printed in the United States of America.

Print: ISBN 0-7381-2496-6 SH94857
PDF: ISBN 0-7381-2497-4 SS94857

No part of this publication may be reproduced in any form, in an electronic retrieval system or otherwise, without the prior written permission of the publisher.

--`,,`-`-`,,`,,`,`,,`---

Copyright The Institute of Electrical and Electronics Engineers, Inc.
Provided by IHS under license with IEEE
No reproduction or networking permitted without license from IHS Not for Resale

IEEE Standards documents are developed within the IEEE Societies and the Standards Coordinating Committees of the IEEE Standards Association (IEEE-SA) Standards Board. Members of the committees serve voluntarily and without compensation. They are not necessarily members of the Institute. The standards developed within IEEE represent a consensus of the broad expertise on the subject within the Institute as well as those activities outside of IEEE that have expressed an interest in participating in the development of the standard.

Use of an IEEE Standard is wholly voluntary. The existence of an IEEE Standard does not imply that there are no other ways to produce, test, measure, purchase, market, or provide other goods and services related to the scope of the IEEE Standard. Furthermore, the viewpoint expressed at the time a standard is approved and issued is subject to change brought about through developments in the state of the art and comments received from users of the standard. Every IEEE Standard is subjected to review at least every five years for revision or reaffirmation. When a document is more than five years old and has not been reaffirmed, it is reasonable to conclude that its contents, although still of some value, do not wholly reflect the present state of the art. Users are cautioned to check to determine that they have the latest edition of any IEEE Standard.

Comments for revision of IEEE Standards are welcome from any interested party, regardless of membership affiliation with IEEE. Suggestions for changes in documents should be in the form of a proposed change of text, together with appropriate supporting comments.

Interpretations: Occasionally questions may arise regarding the meaning of portions of standards as they relate to specific applications. When the need for interpretations is brought to the attention of IEEE, the Institute will initiate action to prepare appropriate responses. Since IEEE Standards represent a consensus of all concerned interests, it is important to ensure that any interpretation has also received the concurrence of a balance of interests. For this reason, IEEE and the members of its societies and Standards Coordinating Committees are not able to provide an instant response to interpretation requests except in those cases where the matter has previously received formal consideration.

Comments on standards and requests for interpretations should be addressed to:

Secretary, IEEE-SA Standards Board
445 Hoes Lane
P.O. Box 1331
Piscataway, NJ 08855-1331
USA

Note: Attention is called to the possibility that implementation of this standard may require use of subject matter covered by patent rights. By publication of this standard, no position is taken with respect to the existence or validity of any patent rights in connection therewith. The IEEE shall not be responsible for identifying patents for which a license may be required by an IEEE standard or for conducting inquiries into the legal validity or scope of those patents that are brought to its attention.

IEEE is the sole entity that may authorize the use of certification marks, trademarks, or other designations to indicate compliance with the materials set forth herein.

Authorization to photocopy portions of any individual standard for internal or personal use is granted by the Institute of Electrical and Electronics Engineers, Inc., provided that the appropriate fee is paid to Copyright Clearance Center. To arrange for payment of licensing fee, please contact Copyright Clearance Center, Customer Service, 222 Rosewood Drive, Danvers, MA 01923 USA; (978) 750-8400. Permission to photocopy portions of any individual standard for educational classroom use can also be obtained through the Copyright Clearance Center.

--`,,`-`-`,,`,,`,`,,`---

Copyright The Institute of Electrical and Electronics Engineers, Inc.
Provided by IHS under license with IEEE
No reproduction or networking permitted without license from IHS Not for Resale

Introduction

(This introduction is not part of IEEE Std C37.96-2000, IEEE Guide for AC Motor Protection.)

The following changes have been made in this revision of the AC Motor Protection Guide:

— A glossary of component and terminology definitions has been added as Clause 3.

— Clause 6 has been modified to include more application guidance for the protection of adjustable-speed drives and motor systems.

— Clause 8 has been added to discuss the advantages, benefits, and issues regarding the application of the multifunction, microprocessor-based protection systems because of their widespread use on motor applications.These benefits are discussed in generic terms and are generally obtained when applying this type of protection system. The areas are thermal modeling capability, integration of functions into one package, control, data collection/reporting/remote communications, and certain application issues. Additionally, Clause 8 was added to provide more guidance for the application of multifunction, microprocessor-based protection systems.

Participants

At the time this guide was completed, the AC Motor Protection Guide Working Group had the following membership:

Jonathan D. Gardell, *Chair*
Munnu Bajpai, *Vice Chair*

A. N. Darlington
S. Easterday-McPadden
E. C. Fennell
S. Mazumdar
G. C. Parr
S. C. Patel
G. W. Pence
A. C. Pierce
P. W. Powell
R. V. Rebbapragada
D. W. Smaha
S. M. Usman
W. P. Waudby
K. J. Khunkhun
M. Yalla
S. E. Zocholl

Copyright © 2000 IEEE. All rights reserved.

Copyright The Institute of Electrical and Electronics Engineers, Inc.
Provided by IHS under license with IEEE
No reproduction or networking permitted without license from IHS
Not for Resale

The following members of the balloting committee voted on this standard:

Alexander P. Apostolov
John Appleyard
Michael P. Baldwin
E. A. Baumgartner
Farouk D. Baxter
Robert W. Beckwith
G. Benmouyal
John Boyle
B. Bozoki
Mark Carpenter
Robert C. Carruth
John Carter
John W. Chadwick, Jr.
Simon R. Chano
Simon H. Cheng
D. Mason Clark
Stephen P. Conrad
Albert N. Darlington
Douglas C. Dawson
Robert W. Dempsey
Edward F. Dowling
Walter Elmore
Ahmed Elneweihi
Joseph R. Fragola
Jonathan D. Gardell
Luis C. Gonzalez
Peter A. Goodwin
Lawrence P. Gradin
John Kenneth Greene
Stephen E. Grier
E. A. Guro
Robert W. Haas
Robert E. Hall
George S. Haralampu
Roy E. Hart
Irwin O. Hasenwinkle
Roger A. Hedding
Charles F. Henville
Jerry W. Hohn
Stanley H. Horowitz
John J. Horwath
James D. Huddleston, III
James W. Ingleson
David W. Jackson
K. J. Khunkhun
Joseph L. Koepfinger
J. S. Komisarek
Peter A. Kotos
Albert Livshitz
William A. Maguire
W. J. Marsh, Jr.
John R. Matras
J. E. McConnell
Michael J. McDonald
Jeffrey L. McElray
M. Meisinger
Gary L. Michel
Daleep C. Mohla
Charles J. Mozina
George R. Nail
Bradley D. Nelson
Joseph C. Osterhout
George C. Parr
C. A. Petrizzo
Robert D. Pettigrew
Alan C. Pierce
Ramas Ramaswami
Roger E. Ray
Bob Ryan
Mohindar S. Sachdev
Miriam P. Sanders
Tarlochan Sidhu
H. Stanley Smith
Patrick Smith
Peter A. Solanics
James E. Stephens
James E. Stoner
Alan D. Storms
William M. Strang
Charles Sufana
Malcolm J. Swanson
Richard P. Taylor
John H. Taylor
James S. Thorp
Demetrios A. Tziouvaras
Joe T. Uchiyama
Eric A. Udren
Arnold Vitols
Charles L. Wagner
William P. Waudby
Steve G. Whisenant
Donald M. Worden
Larry E. Yonce
David J. Zaprazny
Karl Zimmerman
John A. Zipp
Stan Zocholl

When the IEEE-SA Standards Board approved this standard on 30 March 2000, it had the following membership:

Donald N. Heirman, *Chair*
James T. Carlo, *Vice Chair*
Judith Gorman, *Secretary*

Satish K. Aggarwal
Mark D. Bowman
Gary R. Engmann
Harold E. Epstein
H. Landis Floyd
Jay Forster*
Howard M. Frazier
Ruben D. Garzon
James H. Gurney
Richard J. Holleman
Lowell G. Johnson
Robert J. Kennelly
Joseph L. Koepfinger*
Peter H. Lips
L. Bruce McClung
Daleep C. Mohla
James W. Moore
Robert F. Munzner
Ronald C. Petersen
Gerald H. Peterson
John B. Posey
Gary S. Robinson
Akio Tojo
Donald W. Zipse

*Member Emeritus

Also included is the following nonvoting IEEE-SA Standards Board liaison:

Alan Cookson, *NIST Representative*
Donald R. Volzka, *TAB Representative*

Catherine Berger
IEEE Standards Project Editor

Copyright © 2000 IEEE. All rights reserved.
Copyright The Institute of Electrical and Electronics Engineers, Inc.
Provided by IHS under license with IEEE
No reproduction or networking permitted without license from IHS
Not for Resale

Contents

1. Scope 1

2. References 2

3. AC motor terminology glossary 3

4. Equipment description 5

4.1 Induction motors 5
4.2 Synchronous motors 5
4.3 Switching and control 6
4.4 Effect of ac and dc control equipment 7

5. Motor protection requirements 12

5.1 Pullout and stall protection 12
5.2 Stator winding protection 14
5.3 Rotor thermal protection 31
5.4 Stator fault protection 31
5.5 Rotor fault protection 40
5.6 Bearing protection 42
5.7 Abnormal power supply conditions 47
5.8 Abnormal operating conditions 53
5.9 Surge protection 55
5.10 Motors or motor controls used in class 1E nuclear exposure 55

6. Motor protection specifications 55

6.1 General considerations 55
6.2 Motor protection tables 56
6.3 Adjustable-speed motor protection 68

7. Setting and adjustment of protective devices 72

7.1 General discussion 72
7.2 Protective device settings 72

8. Device 11—multifunction, microprocessor-based protection systems 86

8.1 General 86
8.2 Thermal protection in microprocessor-based motor protection systems 87
8.3 Multiple functions generally incorporated into one package 88
8.4 Control functions and features 90
8.5 Data collection, reporting, and remote communications 91
8.6 Application issues 92

Annex A (informative) Induction motor thermal protection basics 93

Annex B (informative) Bibliography 96

Copyright © 2000 IEEE. All rights reserved.

Copyright The Institute of Electrical and Electronics Engineers, Inc.
Provided by IHS under license with IEEE
No reproduction or networking permitted without license from IHS
Not for Resale

This page is intentionally blank.

and Electronics Engineers, Inc.
IEEE
itted without license from IHS
Not for Resale

IEEE Guide for AC Motor Protection

1. Scope

This application guide presents generally accepted methods of protection for ac motors. It identifies and summarizes the functions necessary for adequate protection of motors based on type, size, and application. This guide does not purport to detail the protective requirements of all motors in every situation. What it does provide is enough information and guidance for the user to implement adequate protection for particular applications.

The recommendations in this guide are based on typical types of installations. However, sufficient background information relating to protection requirements, applications, and setting philosophy is provided to enable the reader to determine required protective functions for motor installation. The protective functions discussed in this guide can also be implemented with multifunction, microprocessor-based protection systems (digital systems). A complete discussion of this type of protection system's attributes is included in this guide.

Relay protection of squirrel-cage, wound-rotor induction motors, and synchronous motors is presented herein, with a review of the generally accepted forms of motor protection. This guide also summarizes the uses of relays and devices, individually and in combination, so the user may select the necessary equipment to obtain adequate motor protection.

This guide is concerned primarily with the protection of three-phase, integral horsepower motors and adjustable-speed motors where specifically indicated. Its recommendations are of a general nature, designed to cover typical motor installations. Sufficient background information on objectives, application, and setting philosophy is presented.

The following outline describes the order in which information is presented in this guide:

a) Clause 2 lists applicable references.

b) Clause 3 contains a glossary of terminology.

c) Clause 4 gives a brief description of the design of induction and synchronous motors. It also discusses various types of switching and control devices used to interrupt low- and medium-voltage motors, and provides schematics that show how these devices are controlled and protected.

d) Clause 5 gives a brief description of the damaging effect on a motor of abnormal voltage, current, temperature, and incorrect operating conditions or procedures. A clear understanding of the electrical and mechanical response of the motor to these abnormalities will greatly assist the user in evaluating the need for, and the means of obtaining, adequate motor protection in any situation.

Copyright © 2000 IEEE. All rights reserved.

Copyright The Institute of Electrical and Electronics Engineers, Inc.
Provided by IHS under license with IEEE
No reproduction or networking permitted without license from IHS
Not for Resale

e) Clause 6 presents detailed recommendations for good engineering practice in a series of tables and diagrams. The tables and diagrams are classified according to type of switching, normal source voltage, and motor and circuit ratings; they show the combinations of devices normally applied for an associated protective function. See Table 7 for a complete listing of all device designations [both American National Standard Institute (ANSI) and National Electrical Manufacturer's Association (NEMA)] used in this guide. Also included in this clause is application guidance for protection of adjustable-speed drive applications.

f) Clause 7 includes a discussion of the various factors that must be considered in determining the setting of each relay, protective function, or device. Whenever it is applicable, information is provided on the desirability of using a device to actuate an alarm or a trip.

g) Clause 8 includes a discussion of the important aspects of multifunction, microprocessor-based motor protection systems. Five areas are covered that illustrate the enhancements in functionality and the additional features these types of protection systems provide.

2. References

This guide shall be used in conjunction with the following publications. When the following standards are superseded by an approved revision, the revision shall apply.

ANSI C37.06-1997, American National Standard for Switchgear—AC High-Voltage Circuit Breakers Rated on a Symmetrical Current Basis—Preferred Ratings and Related Capabilities.[1]

ANSI C37.16-1997, American National Standard for Switchgear—Low-Voltage Power Circuit Breakers and AC Power Circuit Protectors—Preferred Ratings, Related Requirements and Application Recommendations.

ANSI C50.10-1987, General Requirements for Synchronous Machines (IEC 34-1-1969).

ANSI C50.41-1982, American National Standard for Polyphase Induction Motors for Power Generating Stations.

ANSI/NEMA ICS 1-Rev. 2 (1990), General Standards for Industrial Control and Systems.

ANSI/NEMA ICS 2-1988, Industrial Control Devices, Controllers, and Assemblies.

ANSI/NFPA 70-1999, National Electrical Code® (NEC®).

IEEE Std C37.010-1999, IEEE Application Guide for AC High-Voltage Circuit Breakers Rated on a Symmetrical Current Basis.[2]

IEEE Std C37.2-1996, IEEE Standard Electrical Power System Device Function Numbers and Contact Designations.

IEEE Std C37.13-1990 (Reaff 1995), IEEE Standard for Low-Voltage AC Power Circuit Breakers Used in Enclosures.

IEEE Std C37.90-1989 (Reaff 1994), IEEE Standard for Relays and Relay Systems Associated with Electric Power Apparatus.

[1]ANSI publications are available from the Sales Department, American National Standards Institute, 11 West 42nd Street, 13th Floor, New York, NY 10036, USA (http://www.ansi.org/).

[2]IEEE publications are available from the Institute of Electrical and Electronics Engineers, 445 Hoes Lane, P.O. Box 1331, Piscataway, NJ 08855-1331, USA (http://standards.ieee.org/).

Copyright © 2000 IEEE. All rights reserved.
Copyright The Institute of Electrical and Electronics Engineers, Inc.
Provided by IHS under license with IEEE
No reproduction or networking permitted without license from IHS
Not for Resale

IEEE Std C37.100-1992, IEEE Standard Definitions for Power Switchgear.

IEEE Std C37.101-1993, IEEE Guide for Generator Ground Protection.

IEEE Std C37.102-1995, IEEE Guide for AC Generator Protection.

IEEE Std C62.2-1987 (Reaff 1994), IEEE Guide for the Application of Gapped Silicon-Carbide Surge Arresters for Alternating Current Systems.

IEEE Std C62.22-1997, IEEE Guide for the Application of Metal-Oxide Surge Arresters for Alternating-Current Systems.

IEEE C62.92.1-1987 (Reaff 1993), IEEE Guide for the Application of Neutral Grounding in Electrical Utility Systems, Part I—Introduction.

IEEE Std 242-1986 (Reaff 1991), IEEE Recommended Practice for Protection and Coordination of Industrial and Commercial Power Systems (IEEE Buff Book).

IEEE Std 522-1992 (Reaff 1998), IEEE Guide for Testing Turn-to-Turn Insulation on Form-Wound Stator Coils for Alternating-Current Rotating Electric Machines.

IEEE Std 620-1996, IEEE Guide for the Presentation of Thermal Limit Curves for Squirrel Cage Induction Machines.

NEMA AB1-1993, Standards for Molded Case Circuit Breakers.[3]

NEMA FU1-1986, Standards for Low-Voltage Cartridge Fuses.

NEMA MG1-1998, Motors and Generators.

NEMA MG10-1994, Energy Management Guide for Selection and Use of Polyphase Motors.

NEMA SG3-1995, Standards for Low-Voltage Power Circuit Breakers, Section SG3, 28-9.5, Application of Fused Circuit Breakers to Full-Voltage Motor Starting and Running Duty of Three-Phase, 60 Hz Motors.

3. AC motor terminology glossary

For purposes of this guide, the following terms and definitions apply. These terms and definitions are commonly used in the industry and found in both IEEE 100-1996 [B152][4] and NEMA MG-1-1998. IEEE 100-1996 should be referenced for terms not defined in this clause.

3.1 accelerating thermal limit (loci): The time-current relationship limit based on the allowable temperature limit of the rotor during the accelerating (starting) process.

3.2 accelerating time-current curve: The characteristic starting current vs. time curve representing the motor acceleration at a given applied voltage.

3.3 accelerating torque: The net torque between the motor capability torque and load torque during the starting process, which accelerates the motor and load to operating speed.

[3]NEMA publications are available from Global Engineering Documents, 15 Inverness Way East, Englewood, Colorado 80112, USA (http://global.ihs.com/).

[4]The numbers in brackets correspond to those of the bibliography in Annex B.

Copyright © 2000 IEEE. All rights reserved.

Copyright The Institute of Electrical and Electronics Engineers, Inc.
Provided by IHS under license with IEEE
No reproduction or networking permitted without license from IHS
Not for Resale

3.4 breakdown torque: The maximum torque that a motor will develop with rated voltage at rated frequency, where an abrupt drop in speed will not occur.

3.5 damper winding limited: A synchronous motor that is thermally limited by its damper winding.

3.6 field winding: The rotor circuit on an ac synchronous motor, which consists of winding connected to a dc source and produces the main electromagnetic field of the motor.

3.7 high-inertia load: A load that has a moment of inertia that exceeds normal values, as described in NEMA MG-1-1993, and for which the motor needs to be designed to have both thermal and mechanical capability to accelerate the load to operating speed without exceeding its limits.

3.8 load torque: The torque required by mechanically driven equipment across the operating speed range.

3.9 locked-rotor current: The steady-state motor current with the rotor locked, when supplied from a source at rated voltage and frequency.

3.10 locked-rotor impedance: The impedance at the motor terminals during the locked-rotor condition.

3.11 locked-rotor thermal limit (permissible locked-rotor time): The maximum permissible safe time vs. locked-rotor current flowing in the windings at rated voltage and frequency.

3.12 locked-rotor torque: The minimum torque that a motor will develop at rest, for all angular positions of the rotor, at rated voltage and frequency.

3.13 loss of synchronism (out of step): A condition that exists when the synchronous machine has lost synchronism with respect to the supply system.

3.14 motor torque capability: The torque capability of the motor, supplied with rated voltage and frequency across the operating speed range, during the starting and running processes.

3.15 pull-in torque: The maximum constant torque of a synchronous motor under which the motor will pull its connected inertia load into synchronism, at rated voltage and frequency, when its field excitation is applied.

3.16 pull-up torque: The minimum torque developed by the motor during the period of acceleration from rest to the speed at which breakdown torque occurs.

3.17 rotor: The rotating component of an ac motor that contains the field winding, which may be wound or of the squirrel-cage type. In the case of the synchronous motor, the field winding may be energized from a dc source.

3.18 rotor limited: A motor that is thermally limited by its rotor system.

3.19 running thermal capability: A plot of maximum permissible time vs. percent of rated current flowing in the motor winding when the motor is running.

3.20 service factor: A multiplier which, when applied to the rated horsepower, indicates a permissible horsepower loading that may be carried under the conditions specified for the service factor.

3.21 slip cycle: When a synchronous motor slips out of step (loss of synchronism) a complete 360° with respect to the supply source.

Copyright © 2000 IEEE. All rights reserved.
Copyright The Institute of Electrical and Electronics Engineers, Inc.
Provided by IHS under license with IEEE
No reproduction or networking permitted without license from IHS
Not for Resale

3.22 slip frequency: The frequency of a induction motor rotor's voltage and current when the rotor is rotating at some value of slip.

3.23 starting current: The current required by the motor during the starting process to accelerate the motor and load to operating speed. Maximum starting current at rated voltage is drawn at the time of energizing.

3.24 starting time: The time required to accelerate the load to operating speed.

3.25 starting torque: The rated motor torque capability during start at rated voltage and frequency.

3.26 stator: The stationary component of an ac motor that contains the armature winding and stator core.

3.27 stator-limited: A motor that is thermally limited by its stator system.

3.28 squirrel-cage winding: A rotor circuit that consists of conducting bars, connected with an end ring on each end, which constitute the rotor winding. Voltages are induced on this circuit which, in turn, produces current flow. Interaction between the stator and rotor fields creates the electromagnetic torque of the motor.

3.29 thermal limit curve (cold): A plot of maximum permissible time vs. percent of rated current flowing in the motor winding when the motor is started from ambient temperature.

3.30 thermal limit curve (hot): A plot of maximum permissible time vs. percent of rated current flowing in the motor winding when the motor is started from rated operating temperature.

3.31 wound rotor winding: The rotor circuit on a wound rotor induction motor, which consists of a polyphase winding that carries the alternating current produced by induction.

4. Equipment description

4.1 Induction motors

The stator winding (armature windings) of an induction motor is connected to the power line. The winding in the rotor slots is not connected to any power lines, but receives its current by means of induction. Energy is transferred to the rotor by means of the magnetic field. Depending on the type of power supply, the stator winding is either polyphase (usually three-phase) or single-phase. The rotor winding is designed as either a polyphase winding (wound rotor winding, usually three-phase) or a squirrel-cage winding. In the wound rotor induction motor, the conductors of the rotor winding are insulated and are brought out to slip rings, which are connected to a starting or control device. In the squirrel-cage induction motor, the conductors of the rotor are not insulated, but consist of bare conductors set into the slots. These conductors are connected together solidly by a conducting metallic ring at each end that is compatible with the conductor alloy.

4.2 Synchronous motors

Polyphase synchronous motors have stators and stator windings (armature windings) similar to those of induction motors. The rotor of the synchronous motor, however, differs considerably from that of the induction motor. The rotor has poles, usually salient, corresponding to the number of stator winding poles. The poles are wound with many turns of wire, and a direct current is circulated through the winding to create alternately north and south magnetic flux poles.

Copyright © 2000 IEEE. All rights reserved.

Copyright The Institute of Electrical and Electronics Engineers, Inc.
Provided by IHS under license with IEEE
No reproduction or networking permitted without license from IHS
Not for Resale

The dc excitation may be applied to the field windings through brush rigging and slip rings, or by means of a brushless excitation system consisting of an ac exciter, rectifier, and control equipment mounted on the rotating element.

To start a synchronous motor, it is normally necessary to have a number of bars embedded in the face of each pole, short-circuited at each end to form a squirrel cage (called amortisseur or damper winding) similar to that found in the induction motor. Furthermore, the field winding must be disconnected from the dc supply and shorted, usually by means of an appropriate starting and field-discharge resistor during starting (that is, the synchronous motor is normally started as an induction motor).

The differences between control and motor protection of the synchronous motor, as compared to the induction motor, are related to the rotor construction. Since dc excitation is required for synchronous operation, and synchronous operation is fundamental to the synchronous motor, protection against both loss of field and loss of synchronism should be provided. During starting, the control equipment generally is required to ensure, automatically and accurately, that the rotor speed has reached a proper value before the dc excitation is applied. The synchronous motor rotor thermal capability and its allowable stall time (permissible locked-rotor time) are generally much less than for an induction motor, and special protection for the damper winding must be provided.

However, since the synchronous motor's stator, bearings, and enclosure variations are essentially the same as those of the induction motor, protection schemes for these parts are basically the same.

4.3 Switching and control

All motors require the following functions to be incorporated into their control and switching equipment:

a) Stator disconnection means
b) Stator fault-interrupting devices
c) Stator switching means

Various devices used for these functions are described in 4.3.1, 4.3.2, and 4.3.3. All three functions may be provided in a single device. In some applications, two or three devices may be required. In addition, a synchronous motor must have some means of field switching.

In this subclause, the general types of stator and field interrupting and control devices are described. These devices have been primarily specified with the protection of the motor in mind. In some cases, the question of interruption to production is a very vital consideration for the user, and protection of certain motors may be secondary. In this case, see 5.7.2.1.1 and 5.7.2.1.2.

4.3.1 AC line-interrupting control devices

Since the protective device generally provides only for the detection of an abnormality, it is necessary to consider the interrupting device in selecting the overall protection package. Although a detailed review of such devices is beyond the scope of this guide, a summary of their application and limitations is essential.

4.3.1.1 Low-voltage magnetic contactor with circuit breaker or fuses (up to 600 V)—motor control center (MCC)

These controllers consist of a magnetic contactor used for starting or stopping the motor. The controller is equipped with thermal overload (heaters) and loss-of-voltage protection. Loss-of-voltage protection is inherent with magnetic contactors when used with integral control power supply and three-wire control circuits. Loss-of-voltage protection in this context indicates that the supply power is interrupted and the disconnection is maintained. The voltage must fall sufficiently to permit the contactor to open and break the seal-in

Copyright © 2000 IEEE. All rights reserved.
Copyright The Institute of Electrical and Electronics Engineers, Inc.
Provided by IHS under license with IEEE
No reproduction or networking permitted without license from IHS
Not for Resale

circuit, and may not protect the motor against undervoltage operation. Short-circuit protection may be provided either by the magnetic trip of the circuit breaker or by fuses. The circuit breaker may also serve as the disconnecting means, whereas a separate disconnecting means is required in fused starters.

4.3.1.2 NEMA Class E1 high-voltage motor controllers (2200–4800 V)

Standards for these motor controllers are given in ANSI/NEMA ICS 2-1988, and the ratings are listed in Table 2-324-2 of that document. These controllers consist of a medium-voltage magnetic contactor used for starting and stopping the motor, with thermal overload and undervoltage protection similar to that listed for the low-voltage units. In addition, fault protection is provided by instantaneous overcurrent (IOC) relays to trip a circuit breaker. Other relaying is added as described in Clause 6. The circuit breaker may also serve as the disconnecting means.

4.3.1.3 NEMA Class E2 high-voltage motor controllers (2200–4800 V)

These motor controllers are similar to the Class E1 controllers described in 4.3.1.2, except that the short-circuit protective relays are omitted and fault-interrupting fuses are added. The fuses operate for fault-current magnitudes above the interrupting capability of the main contactor. Special care is required in applying instantaneous relaying so that the contactor does not attempt to interrupt current magnitudes above the contactor rating. In many cases, the contactor opening time is greater than the maximum clearing time for the fuse. However, when large motors (2000 hp and above) are supplied by fused contactors, fuse clearing times are increased, which may require delaying contactor opening.

4.3.2 Switchgear-type motor control

Power circuit breakers can be used for motor control of all stator-disconnecting, fault-interrupting, and switching functions. Standards are available that cover the application and limitations of ac power circuit breakers for these functions. For example, ANSI C37.16-1988 shows the application of low-voltage ac power circuit breakers for full-voltage motor starting and running duty of three-phase, 60 Hz, 40 °C rise motors; whereas ANSI C37.16-1988 covers the limitations related to repetitive duty and normal maintenance. ANSI C37.06-1987 shows the number of operations for various operating conditions that can be performed on medium-voltage circuit breakers before maintenance is required.

4.3.3 Field switching equipment

All synchronous motors are provided with some form of field application equipment to apply the dc source at the appropriate point (time or speed). The control of this power supply must be integrated with the stator control. For smaller motors, contactors are used to switch the power supply to the field. On larger ratings, field circuit breakers may be needed. Two methods are commonly used to apply the dc supply to brushless synchronous motor fields. In one method, an ac power supply is applied to a rotating transformer whose output is rectified and supplied to the field. The other method uses a dc supply to an ac exciter whose output is rectified and supplied to the field. The equipment that rectifies ac power to the dc field is contained on the rotating element.

4.4 Effect of ac and dc control equipment

Synchronous motors require both stator and field control circuits. The control circuit requirements for induction motors depend on the type; for example, a squirrel-cage induction motor requires only stator control, and the wound rotor type requires, additionally, a rotor circuit control. A variety of ac or dc control circuits are used for these purposes. Some examples of stator control schematics are shown in the simplified circuits of Figure 1, Figure 2, and Figure 3.

Copyright © 2000 IEEE. All rights reserved.

Copyright The Institute of Electrical and Electronics Engineers, Inc.
Provided by IHS under license with IEEE
No reproduction or networking permitted without license from IHS
Not for Resale

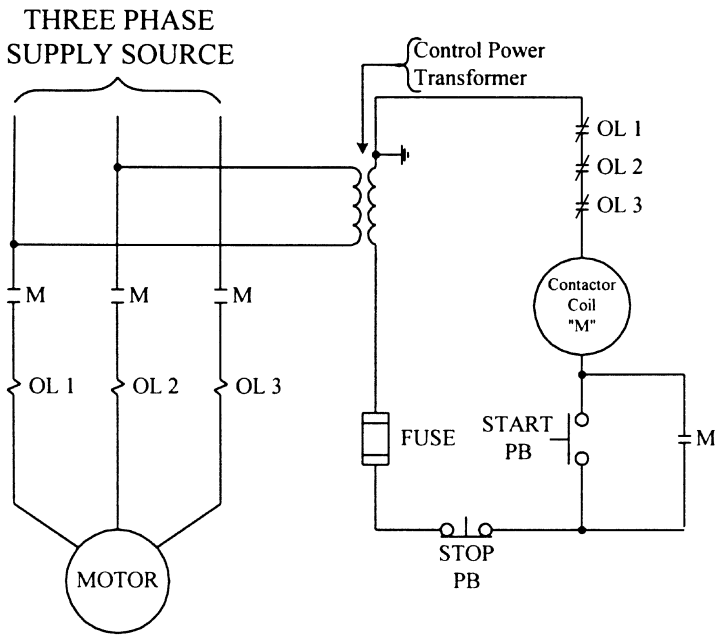

Figure 1—Three-wire control circuit with loss-of-voltage protection (field control not shown)

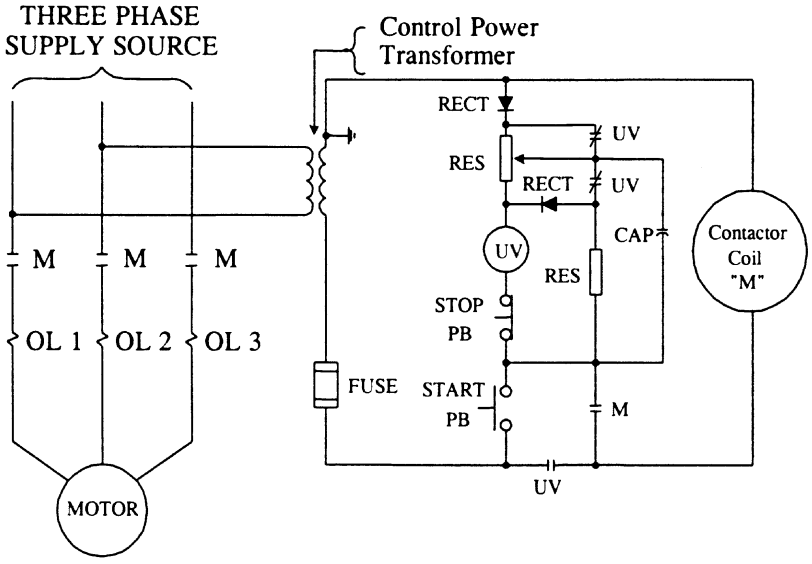

Figure 2—Three-wire control circuit with time-delay loss-of-voltage protection

Copyright The Institute of Electrical and Electronics Engineers, Inc.
Provided by IHS under license with IEEE
No reproduction or networking permitted without license from IHS
Copyright © 2000 IEEE. All rights reserved.
Not for Resale

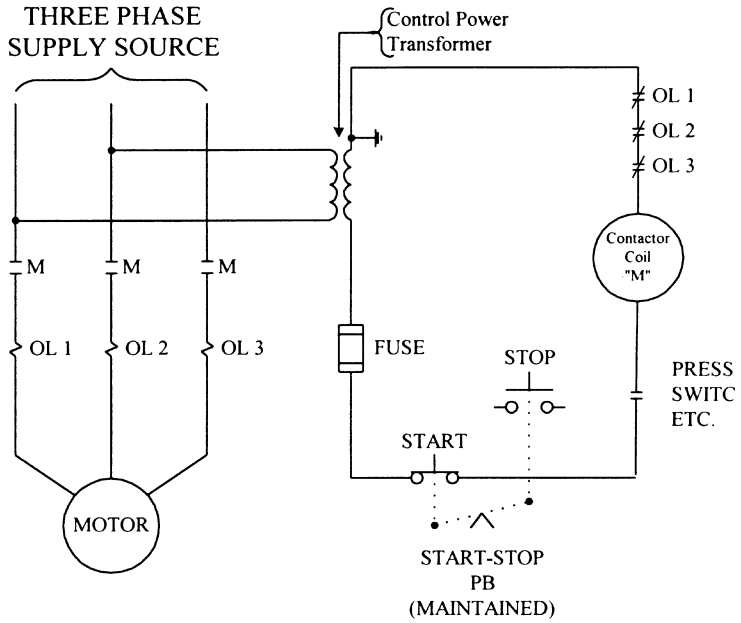

Figure 3—Two-wire control circuit with loss-of-voltage release

4.4.1 Stator control equipment

Protection from extremely low or complete loss of line voltage is an inherent feature of the nonlatched type of ac motor controllers. These devices are not designed to release at any specific level of voltage. A measure of protection against low line voltage is available because the contactors are maintained closed by potential taken directly from the motor line or from a control power transformer. The line contactors must be closed at 85% of rated line voltage, according to ANSI/NEMA ICS 2-1988, 110.41 (b), while the dropout point is not defined and may vary from 20% to 70% of rated voltage (typically 70%). The line contactor will drop open if a severe voltage dip or complete loss of line voltage should occur while a motor is running.

4.4.1.1 Three-wire control with loss-of-voltage protection

When the circuit shown in Figure 1 is used, the contactor (M) is maintained through an auxiliary contact in parallel with the start pushbutton. If the contactor should open due to low line voltage, the coil circuit is broken by the auxiliary control contact, and the motor cannot restart until the start pushbutton is operated. This type of protection is referred to as three-wire control with loss-of-voltage protection. During a condition of low line voltage, a synchronous motor acts as a source of reactive power for a short period of time and, therefore, tends to maintain its ac terminal voltage for a considerably longer period than an induction motor. Voltage-sensitive contactors cannot be relied upon in this instance, since the motor may generate sufficient voltage to prevent the contactor from dropping out. See 5.7.2.1.2 for information on the protection of the motor for this condition.

4.4.1.2 Three-wire control with time-delay loss-of-voltage protection

When it is desired to ensure that the motor will continue to operate during voltage dips or outages of short duration, a control circuit similar to that shown in Figure 2 can be used. This is referred to as three-wire control with time-delay loss-of-voltage protection; it consists of a time-delay undervoltage (UV) relay that maintains a sealing contact for a definite period after a voltage failure. It should be noted that the contactor (M) may drop out during the voltage dip, but will pick up again when the voltage is restored if the undervoltage time delay has not been exceeded.

Copyright © 2000 IEEE. All rights reserved.

Copyright The Institute of Electrical and Electronics Engineers, Inc.
Provided by IHS under license with IEEE
No reproduction or networking permitted without license from IHS
Not for Resale

4.4.1.3 Two-wire control

When the auxiliary control contact (M) of Figure 1 is omitted, and the start-stop pushbutton is replaced with a toggle or latched switch and a knife switch, pressure switch, or other type of maintained contact sensing device, the two-wire control of Figure 3 results. With this scheme, the line contactor opens on any low voltage below the dropout value to disconnect the motor. The motor automatically restarts when sufficient voltage is restored to close the line contactor. This arrangement is referred to as two-wire control with loss-of- voltage release. This two-wire control arrangement has the disadvantage that several motors on the same power system will attempt to restart simultaneously when voltage is restored. Such a strain on a system may depress the voltage to the point where the motors would never be able to accelerate to full speed (less than 80% to 90% of motor rated voltage). This is because the starting torque of a motor is proportional to square of the applied voltage to the motor terminals. In addition, unexpected automatic restarting after restoration of voltage may not be desirable. When the two-wire control is used, overload relays with automatic reset should not be applied. When the automatic reset overload relays are installed in this arrangement, an overload causes the motor to shut down, but the motor is restarted when the relays reset. The cycle could continue until the motor is damaged.

Synchronous motors would probably pull out of step if restored automatically; therefore, the scheme in Figure 3 is not recommended for them.

4.4.1.4 Circuit breaker control

When circuit breakers are used for motor control, no inherent tripping occurs for low (or zero) line voltage. These devices are latched and must be tripped by operating a specific device or contact.

4.4.2 Field-control equipment

Switching the field of a synchronous motor is complicated by the fact that the field may be any of the following:

a) A brush-type field (i.e., one supplied power through slip rings on the shaft and associated brushes) that derives its direct current from
   1) A shaft-driven dc excite.
   2) A separate motor-generator set.
   3) A separate static rectifier.

b) A brushless-type field that requires
   1) DC excitation for the field of a rotating ac exciter.
   2) AC excitation for the primary of a rotating transformer.

   Generally, the field application circuit must
   1) Provide a discharge path for the alternating current induced in the motor field during starting. This circuit may require opening of the field-discharge-resistor circuit when excitation is applied to the motor field.
   2) Apply field at a suitable speed (95% to 99%) and (with some equipment) at a favorable position of the rotor poles with respect to the rotating flux.
   3) Automatically remove field on impending pullout.
   4) Automatically resynchronize upon restoration of favorable conditions, or provide shutdown, whichever is desired.

Copyright © 2000 IEEE. All rights reserved.
Copyright The Institute of Electrical and Electronics Engineers, Inc.
Provided by IHS under license with IEEE
No reproduction or networking permitted without license from IHS
Not for Resale

4.4.2.1 Brush-type (slip rings)

A typical low-voltage, brush-type synchronous motor control is shown in Figure 4. The details of operation vary with the particular equipment supplied by different manufacturers and with different motor applications. The general sequence of operation is as follows: closure of the start pushbutton energizes the line-contactor coil (M), connecting the motor stator to the ac line and sealing in around the pushbutton.

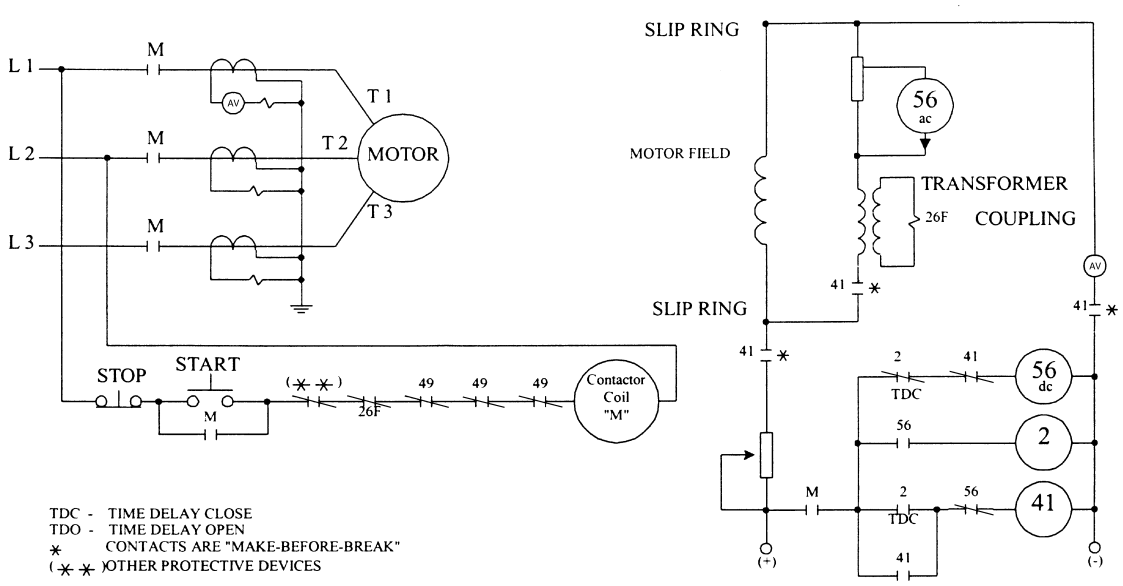

Figure 4—Typical brush-type synchronous motor control

The motor accelerates as an induction motor with its field connected across its starting (and discharging) resistor. A thermal relay (26F) for damper winding protection is in series with this resistor. Should the motor fail to start and accelerate, the relay operates to open the line-contactor coil circuit. This protection is discussed in 3.3. It is frequently important that the field be applied at the proper speed and at a favorable position of the rotor with respect to the rotating flux in the machine. To accomplish this, coordination is required between the field application or synchronizing relay (56 dc) and an ac holding coil (56 ac). When the line contactor (M) closes, its auxiliary contact energizes the closing coil (56 dc), which energizes the timing relay (2) and opens the field contactor (41) coil circuit. The timing relay is used to prevent the application of field until the proper time. When the timer reaches its actuating position, the field application relay closing coil (56 dc) is de-energized, leaving the operation of this relay dependent upon the variable ac voltage signal appearing across the starting resistor, as detected by the holding coil (56 ac). This relay will drop out when the time interval between half waves of the rectified induced field current exceeds the relay setting. This occurs at 94% to 98% of synchronous speed, at which time its contacts will close, energizing the field contactor (41).

4.4.2.2 Brushless-type

In brushless-type synchronous motor control, the motor field and the field application circuit are mounted on the motor shaft. Alternating current is still required for the line contactor and the exciter field. These circuits

Copyright © 2000 IEEE. All rights reserved.

Copyright The Institute of Electrical and Electronics Engineers, Inc.
Provided by IHS under license with IEEE
No reproduction or networking permitted without license from IHS
Not for Resale

are, in general, similar to those for the brush-type motor and need not be repeated. A typical control circuit, inherent in a brushless-type motor and mounted with the rotating equipment, is shown in Figure 5 and operates as follows. The SCR2 is fired during a synchronous motor startup (induction motor stage) for activating the field-discharge resistor. The control circuit holds the rectifier SCR1 from firing until the slip frequency becomes very small, which is approaching synchronous speed; it then fires the rectifier SCR1 at the proper time, and thus applies excitation to the synchronous motor field. At the same time, the field-discharge resistor is removed from the circuit (deactivating) by removing the gate signal of the rectifier SCR2. This frequency-sensitive part of the control circuit ensures that the field excitation is applied at the proper pull-in speed for successful synchronizing.

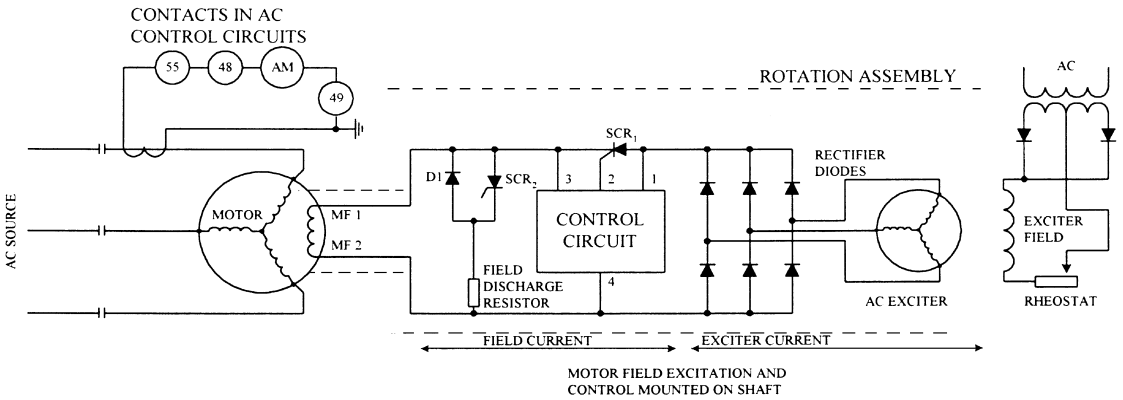

Figure 5—Typical brushless-type synchronous motor control

5. Motor protection requirements

5.1 Pullout and stall protection

5.1.1 Induction-motor stalling

An induction motor stalls when the load torque exceeds the breakdown torque and causes its speed to decrease to zero, or to some stable operating point well below rated speed. This occurs when the applied shaft load is greater than the producing motor torque due to the suppression of the motor terminal voltage. Also, a stall condition can occur when an excessive mechanical load is applied beyond motor torque capability. This condition will develop motor current equal to or approaching locked-rotor current.

5.1.2 Synchronous motor loss of synchronism (pullout)

When a synchronous motor loses synchronism with respect to the system frequency with which it is connected, it is referred to as “out of step.” This condition occurs when the following actions take place individually or in combination:

a) Excessive load is applied to the shaft
b) The supply voltage is reduced excessively
c) The motor excitation is too low

Copyright © 2000 IEEE. All rights reserved.
Copyright The Institute of Electrical and Electronics Engineers, Inc.
Provided by IHS under license with IEEE
No reproduction or networking permitted without license from IHS
Not for Resale

Torque pulsations applied to the shaft of a synchronous motor are also a possible cause of loss of synchronism, if the pulsations occur at an unfavorable period relative to the natural frequency of the rotor with respect to the power system.

A prevalent cause of loss of synchronism is a fault occurring on the supply system. Fault-clearing time, fault location, fault type, and system configuration are significant factors relating to the stability of the motor. Fast fault clearing, multiple ties, and remoteness of faults favor stability.

Underexcitation of the machine is a common cause of out-of-step operation. This may be caused by incorrect tripping of the rotor field circuit breaker (or contactor), or by opening or short circuiting the field circuit. When loss of synchronism (pullout) occurs, and the motor is not separated from the system on the first pole slippage, field excitation must be disconnected and the field connected to the discharge resistor immediately. This minimizes the current that flows until the motor can be isolated. The motor should then be isolated as quickly as possible, because this is not an acceptable long-term operating condition.

5.1.3 Electrical quantities change during a stall

For an induction motor to stall during normal operation, the load torque must exceed the breakdown torque as described in 5.1.1. During this process, the motor current will increase rapidly (which is called “inrush current” or “locked rotor”) until the breakdown torque is reached. Beyond breakdown torque, the motor current continues to increase approaching locked-rotor current. Along with the increase in current, the speed of the motor decreases and the impedance of the motor approaches the locked-rotor impedance.

There are two types of stall causes, as follows:

a) Excess shaft load torque prior to a motor startup (e.g., failure to open the pump’s discharge gate)
b) Sudden change of increased shaft load torque during normal operation (e.g., bearing failures)

For a synchronous motor, loss of synchronism is a gradually evolving phenomenon rather than an instantaneous occurrence, as described in 5.1.2. During the initial phase of pullout, stator current increases, terminal voltage decreases, and a voltage is induced in the rotor circuit at the slip frequency. Power flow into the motor increases until approximately a 90° angle is reached between the equivalent machine voltage and the system voltage. At approximately the 180° point, current is maximum and lags the system voltage by the angle of the total impedance between the motor and the system (including the stator resistance and transient reactance of the motor). Also at this point, the direction of power flow reverses, with the motor mass supplying energy to the system. When resistance is significant, this reversal occurs prior to the 180° point. The reactive power flow for virtually the full slip cycle is into the motor, but it may be provided by the motor for a small part of the slip cycle, depending on the machine excitation.

5.1.4 Protective devices for detecting abnormal motor conditions

Stall detection for an induction motor is usually provided by an overcurrent relay, with an inverse characteristic set to detect current above the breakdown torque level. Since motor starting can result in a stall or locked-rotor condition, this protection is usually covered by setting the motor-starting relays above the motor-starting time-current curves and below the running and accelerating thermal limit for the motor. In cases where motors are applied to high-inertia loads, overcurrent protection may need to be combined with speed switches, distance relays, or additional rotor thermal protection to fully protect the motor (see 5.2.7).

Out-of-step detection devices for synchronous motors usually operate on the stator power-factor angle. Impedance-type devices are available for detecting loss of field, and they may also be set to operate on out-of-step conditions without field failure, where the motor transient reactance exceeds the system impedance viewed from the motor terminals (the usual case).

Copyright © 2000 IEEE. All rights reserved.

Copyright The Institute of Electrical and Electronics Engineers, Inc.
Provided by IHS under license with IEEE
No reproduction or networking permitted without license from IHS
Not for Resale

For very large synchronous motors or synchronous condensers, a loss-of-field relay is often used to detect VAR flow into the machine. Accidental tripping of the rotor field circuit breaker (or contactor) or loss-of-field current can be accurately detected by this device (see 7.2.5). There have also been successful applications of rotor field current devices operating from a rotor field current shunt and of notching relays that count pole slips based on power reversals.

A device sensing alternating current in the rotor field circuit may also detect the motor out-of-step condition. These devices used in the rotor field circuit usually consist of a current transformer (CT) with an ac relay on its secondary. When the machine is operating synchronously, there is no ac component of rotor field current and, therefore, no relay current. If the machine is out-of-step with the system, a current of slip frequency exists; if it is of sufficient magnitude, the relay picks up. During the starting period, this relay must be blocked. This scheme is not adaptable to motors with a brushless excitation scheme. For such a scheme, a power-factor relay may be used (see 7.2.12).

5.2 Stator winding protection

5.2.1 General

Deterioration of the electrical insulating system of stator windings is a common cause of reduced motor life and failure. This may result from numerous causes, such as subjecting the insulation to moisture, excessive dielectric stress, and mechanical or thermal damage.

The physical and dielectric properties of an insulation system deteriorate with age, and like other chemical activity, this process is accelerated by an elevation in temperature. A rule of thumb has been developed from tests and experience to indicate that the life of an insulation system is approximately halved for each 10 °C incremental increase of winding temperature, and approximately doubled for each 10 °C decrease (the range of 7 °C–12 °C is indicated for modern insulation systems). Thus, insulation life is related to the length of time the insulation is maintained at a given temperature.

In practice, winding failures resulting from dielectric breakdown are usually attributed to conditions such as impulse or switching surge voltage, moisture, penetration, or conducting contaminants. Mechanical stresses, such as vibration or distortion forces, can also cause winding failures. These forces occur most often when starting the motor, or possibly during a transfer to another electrical source. Regardless of the reason associated with the failure, the effect of elevated temperature is to reduce the ability of the insulation to withstand electrical or mechanical abuse.

The temperature level at which an insulation system should be protected is subject to engineering judgment and applicable standards. (For limits established by the motor industry, see NEMA MG1-1998, Articles 12.41, 12.42, and 12.52. For induction motors, see NEMA MG1-1998, Article 20.40. For synchronous motors, see NEMA MG1-1998, Article 21.40.)

It should be noted that deriving increased output at the price of higher temperatures for any given motor means accepting a shorter life. However, when motors are used in essential or critical service, such as for fire pumps or boiler-feed pumps, it is often desirable that the operator be given time to correct an overload condition before a motor is stopped. Such service may require the motor to run overloaded for prolonged periods, in situations where the overload does not exceed the breakdown torque rating of the motor. In these cases, the cost of reduced motor life due to the overload conditions must be weighed against the expense and damage that would result from a service interruption.

5.2.2 Motor overloading

Overloads can produce stator total hot spot temperatures in excess of the designed thermal limits of the winding insulation system. However, in all cases of operation that result in overtemperature, time is an

Copyright © 2000 IEEE. All rights reserved.
Copyright The Institute of Electrical and Electronics Engineers, Inc.
Provided by IHS under license with IEEE
No reproduction or networking permitted without license from IHS
Not for Resale

important factor. The heat storage capacity of an induction motor is relatively large. Slight overloading for short periods of time does not result in damaging temperature excursions, because the extra heat is stored in the mass of the conductor, core, and structural members. In contrast, for locked-rotor conditions, the rate of temperature increase is very rapid due to the large currents. Since very little heat is transmitted (in this short time interval) from the conductors to the more massive parts of the motor, the thermal limits of the winding insulation may be reached within seconds.

5.2.3 National Electrical Code® (NEC®) (ANSI/NFPA 70-1999)[5] and OSHA

The National Electrical Code®(NEC®) (ANSI/NFPA 70-1999) has as its purpose the practical safeguarding of persons, buildings, and their contents from hazards arising from the use of electricity. It contains provisions considered necessary for safety. Its scope includes the electric conductors and equipment installed, for example, within or on public or private buildings, industrial substations and mobile homes. It does not cover installations under the exclusive use of electric utilities, mines, and certain other exceptions. The NEC as a recommendation for safe practice is adopted by most of the states, cities, and towns in the United States as the governing electrical code, and is enforced by the local or state-approved authority.

OSHA, 29 CFR, Chapter XVII, Part 1910 is concerned with all establishments engaged in the manufacture of products for interstate commerce. Part 1910 (Subpart S—Electrical) of the regulation has essentially adopted the NEC and incorporates its requirements for electrical installations. The edition of the NEC adopted by OSHA is not generally the same as that enforced by local authority. NFPA Std 70E is generally the standard that influences the OSHA changes.

The adoption of the NEC in the public and private sector, even though excluding installations under the exclusive control of electric utilities when used in connection with the generation, transmission, and distribution of electric energy, essentially represents requirements for practically all residential, commercial, and industrial installations. For this reason, NEC requirements, as they apply to motors and motor circuits, are included.

The NEC specifies overload devices used to protect motors, motor-control apparatus and motor branch-circuit conductors against excessive heating due to overload and failure to start (see ANSI/NFPA 70-1996, Article 430, Part C). The NEC further specifies devices intended to protect the motor, motor-control apparatus, and branch-circuit conductors against overcurrents due to short circuits and grounds (see ANSI/NFPA 70-1996, Article 430, Part D). In motor branch circuits, it is customary to provide for these functions separately, where the running overload protective device protects against motor overloads and locked rotor, and the overcurrent protective device (as a separate device) provides protection against short circuits and ground faults.

The NEC specifies maximum current rating or setting in relation to motor nameplate full-load current for the motor running overload protective device, since the requirement includes the need to monitor the maximum continuous motor branch-circuit current. Of the several means recognized for providing motor running overload protection, the two basic approaches in common use are a separate overcurrent device that is responsive to motor current, and a thermal protector integral with the motor (see ANSI/NFPA 70-1996, Articles 430–432).

For continuous duty motors, a separate overload device responsive to motor current is specified in ANSI/NFPA 70-1996, Articles 430–432, to be rated or selected to trip at no more than 125% of rated full-load current for motors with a marked temperature rise not over 40 °C, or with a service factor not less than 1.15 and not higher than 115% of full-load current rating for all other motors.

For continuous duty motors having a thermal protector integral with the motor, ANSI/NFPA 70-1996, Articles 430–432 specify that the thermal protector shall be approved for use with the motor that it protects on

[5]National Electrical Code and NEC are both registered trademarks of the National Fire Protection Association, Inc.

--`,,`-`-`,,`,,`,`,,`---

Copyright © 2000 IEEE. All rights reserved.

Copyright The Institute of Electrical and Electronics Engineers, Inc.
Provided by IHS under license with IEEE
No reproduction or networking permitted without license from IHS
Not for Resale

the basis that it will prevent dangerous overheating of the motor due to overload and failure to start. For motors rated more than 1 hp, in addition to protecting against excessive temperature, the thermal protector is specified to limit the combination of motor and protector to an ultimate trip current in the following manner. Where full-load current does not exceed 9 A, the trip current should not exceed 170% of motor full-load current. For motors with full-load current values between 9.1 A and 20 A, the trip current should not exceed 156% of motor full-load current. For motors with a full-load current value of 20 A, the trip current should not exceed 140% of motor full-load current.

Other overload protection recognized by ANSI/NFPA 70-1996, Articles 430–432(a) (4), involves the use of embedded temperature detectors used in conjunction with intermediate devices that cause motor current to be interrupted.

5.2.4 Inadequate ventilation

Inadequate ventilation results from a reduction of coolant flow to the motor parts from which heat is to be removed. Motors operated with clogged or partially clogged ventilating passageways may have restricted airflow and thus run hot. Similarly, screens, filters, or devices in the motor air stream may become clogged and reduce coolant flow. With ventilation blocked, a motor operating even at no load may be subject to destructively high temperatures. Ventilation inadequacy can be detected by airflow, pressure, or devices sensing the temperature of the motor winding, and alarming or tripping action can be initiated.

5.2.5 Unusual ambient conditions

Motors and controls, such as separate overload devices, are ordinarily rated for use in a maximum ambient temperatures no higher than 40 °C. In areas where the ambient temperature at the motor, controls, or both exceeds, or is appreciably lower than, the rated maximum ambient, special consideration may be required, as described in the following paragraphs.

When a motor’s ventilating medium increases in temperature, the motor winding and rotor temperatures also increase. Operating the motor at a higher-than-rated ambient temperature, even though at or below rated load, can subject the motor windings to overtemperature similar to that resulting from overloaded operation in a normal ambient. The motor rating may have to be appropriately reduced for operation in such high ambient temperatures.

Locations that may see higher-than-normal ambient temperatures are those in direct sunlight during a hot summer day or in boiler room installations. Additionally, excessive motor temperature may result if the discharge air is misdirected so as to re-enter the inlet ports. Installing motors too close to a wall or to each other can also cause this to occur.

Motors installed at high altitudes operate in an atmosphere of lower-than-normal air density with reduced cooling effectiveness. This again can result in a higher-than-normal temperature rise, and the motor rating may have to be reduced. Motors designed for special applications, such as sealed motors on submersible pumps that have their rotors in the path of the fluid being pumped, involve unusual ambient conditions that require special consideration in selecting and setting thermal devices, and should be evaluated on an individual basis with input from the manufacturer.

When the ambient temperature is considerably lower than the nominal 40 °C, it would appear that a motor could be loaded beyond its rating. This is not necessarily true. Other considerations besides the thermal limitations of motor components must be taken into account. Mechanical parts, such as shafts and bearings, must be suited for increased loading. Margins on pullout torque may be cut dangerously close. Thus, it is not recommended to load motors beyond their ratings in lower-than-normal ambient temperatures without careful investigation.

Copyright © 2000 IEEE. All rights reserved.
Copyright The Institute of Electrical and Electronics Engineers, Inc.
Provided by IHS under license with IEEE
No reproduction or networking permitted without license from IHS
Not for Resale

In some instances, a motor and its thermal overload device(s) may be installed in two different locations, each with its own ambient conditions. For such cases, special consideration must be given to the protective relay setting(s), or ambient-compensated thermal overload devices may be specified. Further details are given in 5.2.10.2.

Totally enclosed motors, which are cooled by internal recirculation of water-cooled air (heat-exchanger-type motors), can experience overheating because of higher-than-normal water temperature or restricted water flow. By monitoring the temperature of the air discharged from the heat exchanger, excessive temperature of the recirculated air can be detected. In some cases, it may be practical to monitor the flow or temperature of the water through the heat exchanger. For these applications, consideration should be given to whether some other critical component, such as a separately driven fan, should be monitored in addition to the water temperature. Various types of detectors are available that may be used for visual instrumentation, signaling, or shutdown.

Whenever operation under specific abnormal ambient conditions is anticipated, special studies should be conducted and/or special operating information (e.g., derating guidelines) should be obtained from the motor manufacturer.

5.2.6 High and low voltage and frequency

According to NEMA MG1-1998, Article 20.45, motors are generally expected to operate successfully under running conditions at rated load with a variation of ±10% of rated voltage, ±5% of rated frequency, or a combination of the two, provided the sum of the absolute values of the deviations does not exceed 10% and the frequency variation does not exceed ±5%. For synchronous motors, rated excitation current is to be maintained.

Variation in voltage or frequency, or both, usually results in an increase in stator winding temperature over that expected at rated nameplate conditions. Within the defined limits, the increase in operating temperature is permissible, because it is characteristically of short duration and, therefore, is considered not damaging to the insulation. The motor can be protected against such overloads by devices that sense line current, but otherwise are independent of frequency.

The selection and application of overload protection devices must be related to the higher than rated current, which can occur at the extremes if the motor is to be permitted to operate at rated load over the range of voltage and frequency variations. The overload protection devices can be set for 115% of rated current to prevent nuisance tripping for most motors. The minimum tripping value of the overload protection should factor in this extra current. However, if these voltage and frequency variations are expected to occur frequently, or to continue for extended periods of time, motor insulation life expectancy is shortened. In such instances, obtain motors with lower than normal temperature rises at rated condition to compensate for the adverse operating conditions.

Motors may be operated from solid state or other types of variable frequency, or variable voltage power supplies, for adjustable-speed drive applications. For these applications, the motors should be individually evaluated for these conditions and appropriately designed so that the maximum temperature rise over its expected operating range does not exceed values acceptable to the insulation system used. In these applications, stator thermal protection is generally obtained by devices that sense winding temperature rather than motor current alone.

5.2.7 Locked rotor or failure to accelerate

Failure of a motor to accelerate when its stator is energized can be caused by several types of abnormal conditions, including mechanical failure of the motor or load bearings, low supply voltage, or an open circuit in one phase of a three-phase voltage supply. When a motor stator winding is energized with the rotor stationary, the motor performs like a transformer with resistance-loaded secondary winding. Typically, stator

Copyright © 2000 IEEE. All rights reserved.

Copyright The Institute of Electrical and Electronics Engineers, Inc.
Provided by IHS under license with IEEE
No reproduction or networking permitted without license from IHS
Not for Resale

winding currents may range from three to seven or more times the rated full-load value, depending on motor design and supply system impedance. The motor controller must be capable of interrupting locked-rotor current. See Figure 6(a) and Figure 6(b) for typical examples of time-current curves indicating starting (accelerating) time-current, locked-rotor thermal limit, accelerating thermal limit, and running overload curve. In Figure 6(a), the locked-rotor thermal limit is a single point for the 100% motor terminal voltage condition.

During starting, the skin effect due to slip frequency operation causes the rotor resistance to exhibit a high locked-rotor value, which decreases to a low running value at rated slip speed. Using a typical locked-rotor current of six times the rated current and a locked-rotor resistance of three times the normal running value, the I^2R heating effect is estimated at $6^2 \times 3$, or 108 times that at normal current. I^2R defines the heating effect and I^2t defines the thermal capability. Consequently, an extreme temperature must be tolerated for a limited time to start the motor. Overtemperature can be prevented by sensing the line-current magnitude and interrupting the power when the starting time is excessive. Since motors require and can tolerate high current for a limited time during acceleration, an appropriate time delay must be incorporated in the current sensing device. To provide locked-rotor or failure-to-accelerate protection, the protective device must be set to disconnect the motor before the stator insulation suffers thermal damage, or the rotor conductors melt or suffer damage from repeated stress and deformation.

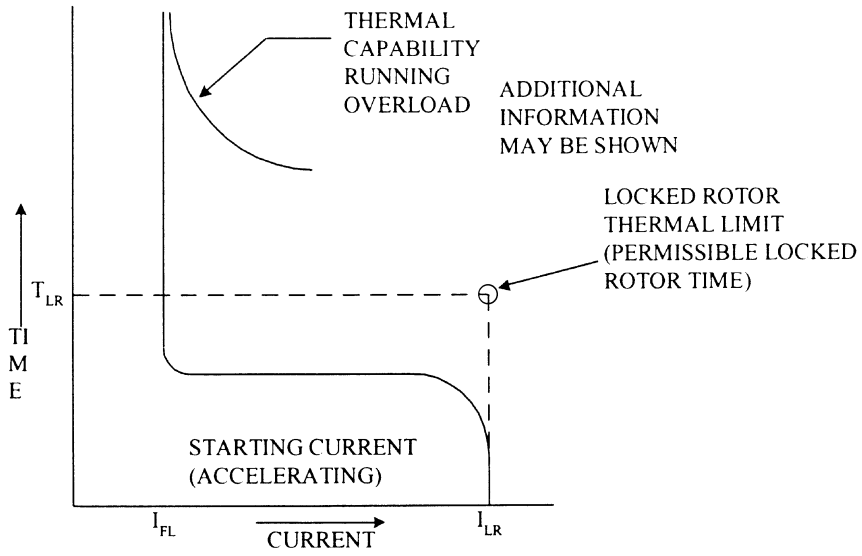

Figure 6 (a)—Typical motor-starting and capability curves (applies for a particular motor terminal voltage and cold start)

Copyright © 2000 IEEE. All rights reserved.
Copyright The Institute of Electrical and Electronics Engineers, Inc.
Provided by IHS under license with IEEE
No reproduction or networking permitted without license from IHS
Not for Resale

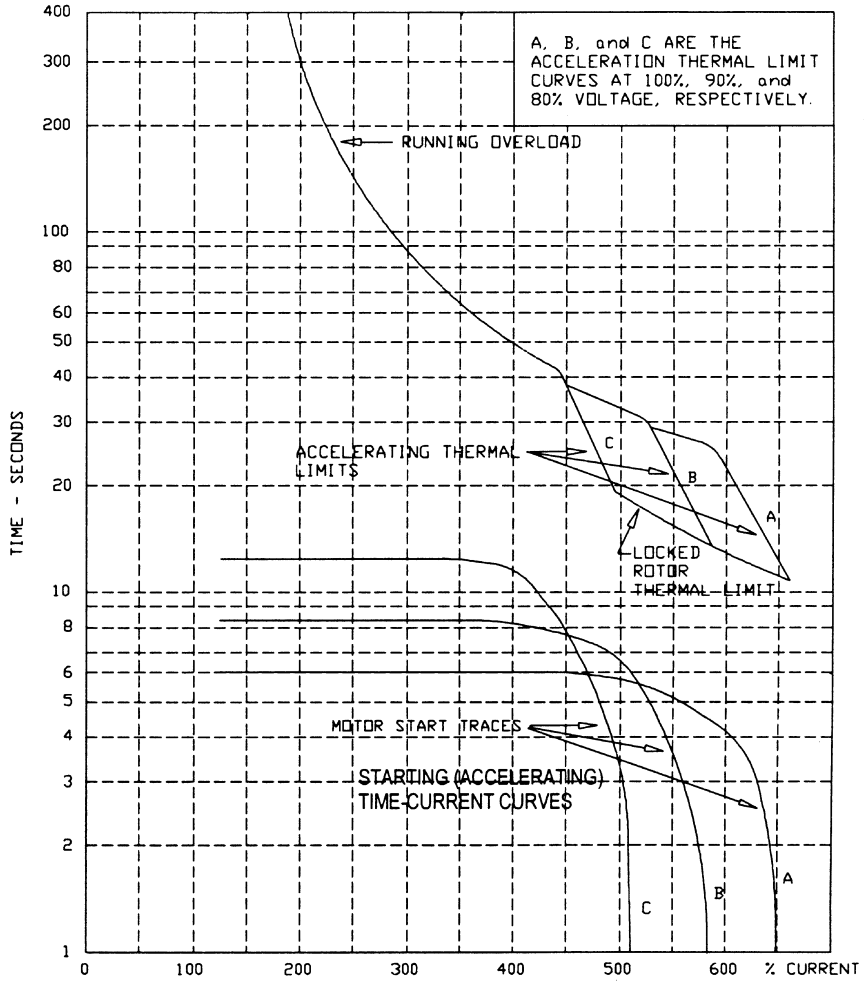

Figure 6 (b)—Typical time-current and thermal limit curves (adapted from IEEE Std 620-1996, Figure 1)

Depending on the design, a motor may be limited thermally by the stator or rotor during accelerating or locked-rotor conditions. In high-horsepower designs, frequent rotor heating and the resulting temperature rise are the limiting factors. The motor designer must address the locked-rotor thermal limit requirement in the design. This allowable locked-rotor thermal limit is usually given for rated locked-rotor current. It can also be given in the form of accelerating thermal limit curves as part of the motor time-current curve, as shown in Figure 6(b). The allowable locked-rotor thermal limit and the accelerating thermal limit curves should be obtained for starting from both rated ambient (cold start) and rated operating (hot start) temperature. It is required that the time-current accelerating (starting) curve be plotted on the same graph as the thermal limit curves for at least 80% and 100% voltage (see IEEE Std 620-1996).

Starting times vary depending on motor design and load torque characteristics. Times may vary from less than two seconds to more than 60 seconds and must be determined for each application. Overload relays applied to detect the locked-rotor conditions must be able to carry full starting current for the entire acceleration period without operating. Although the starting current does drop off near full speed, this effect is normally neglected, providing some margin of safety from relay operation during acceleration.

--`,,`-`-`,,`,,`,`,,`---
Copyright © 2000 IEEE. All rights reserved.

Copyright The Institute of Electrical and Electronics Engineers, Inc.
Provided by IHS under license with IEEE
No reproduction or networking permitted without license from IHS
Not for Resale

Care must be exercised in applying overcurrent relays for locked-rotor conditions. The starting current characteristic, as usually plotted, is a trace of current vs. time. Overcurrent relay operation may occur even though coordination studies show the overcurrent relay characteristic is at all points above the starting characteristic of the motor. The reason for this is that the overcurrent relay curve is a locus of single-current and time values, and the motor-starting current is a dynamic time-current characteristic. A longer time margin should be allowed for the motor accelerating time. Ramsaur [B159] sheds light on the performance of overcurrent relays subject to decreasing current. Proper application of this information allows a satisfactory setting to be chosen.

The starting current at zero time of an induction motor nearly equals the locked-rotor current magnitude, but has a lesser heating effect. This occurs because rotor resistance is a function of slip, and it decreases as the motor accelerates to rated speed. When at rest, the rotor is swept by the rotating field set up by the stator current. The field travels at synchronous speed relative to the stationary rotor and induces a voltage at line frequency. At line frequency, the reactance of the rotor cage causes the current to flow at the outer edge of the bars, occupying only approximately one third of the conductor cross-sectional area. For this condition, the apparent resistance is at a maximum, as is the corresponding I^2R heating. When the rotor accelerates, the rotor conductors catch up with the stator field. The conductors are then subjected to the low-slip frequency, and the current can occupy more of the conductor area. For this condition, the apparent resistance can decrease as much as two-thirds at rated slip, as does the corresponding heating.

The terminal voltage of a large motor may be significantly reduced during starting. An induction motor's starting current varies proportionally with the applied voltage. Because the starting current is reduced, thus reducing the corresponding I^2R heating effect, the allowable accelerating time increases. Allowable accelerating times are commonly specified for 100%, 90%, and 80% starting voltages. Special applications may require motor starting at 70% or even lower voltages. The user should request the specific allowable accelerating time for reduced voltage starting from the manufacturer. The acceleration time of the motor will also change due to the starting voltage. The approximate effect on the motor torque capability is an inverse relationship with the square of the voltage; thus, at 90% voltage, approximately 81% of rated starting (locked rotor) torque capability will be available from the motor. Since the load torque characteristics are not changed, the acceleration time is increased. Figure 6(b) (from IEEE Std 620-1996) is as an example of typical thermal limit and accelerating (starting) time-current curves.

High-inertia loads, such as induced draft fans, require long acceleration times. The starting time may exceed the allowable locked-rotor thermal limit. This is permitted because the rotor resistance is a function of slip and decreases as the motor accelerates. The accelerating (starting) time may exceed the allowable locked-rotor time without excessively heating the rotor. This condition is shown in Figure 7 with the accelerating thermal limit for the applied voltage. The lower end of the curve is the allowable locked-rotor thermal limit (Powell [B92]). For this case, an overcurrent relay set to coordinate with the locked-rotor thermal limit trips on starting current.

Copyright © 2000 IEEE. All rights reserved.
Copyright The Institute of Electrical and Electronics Engineers, Inc.
Provided by IHS under license with IEEE
No reproduction or networking permitted without license from IHS
Not for Resale

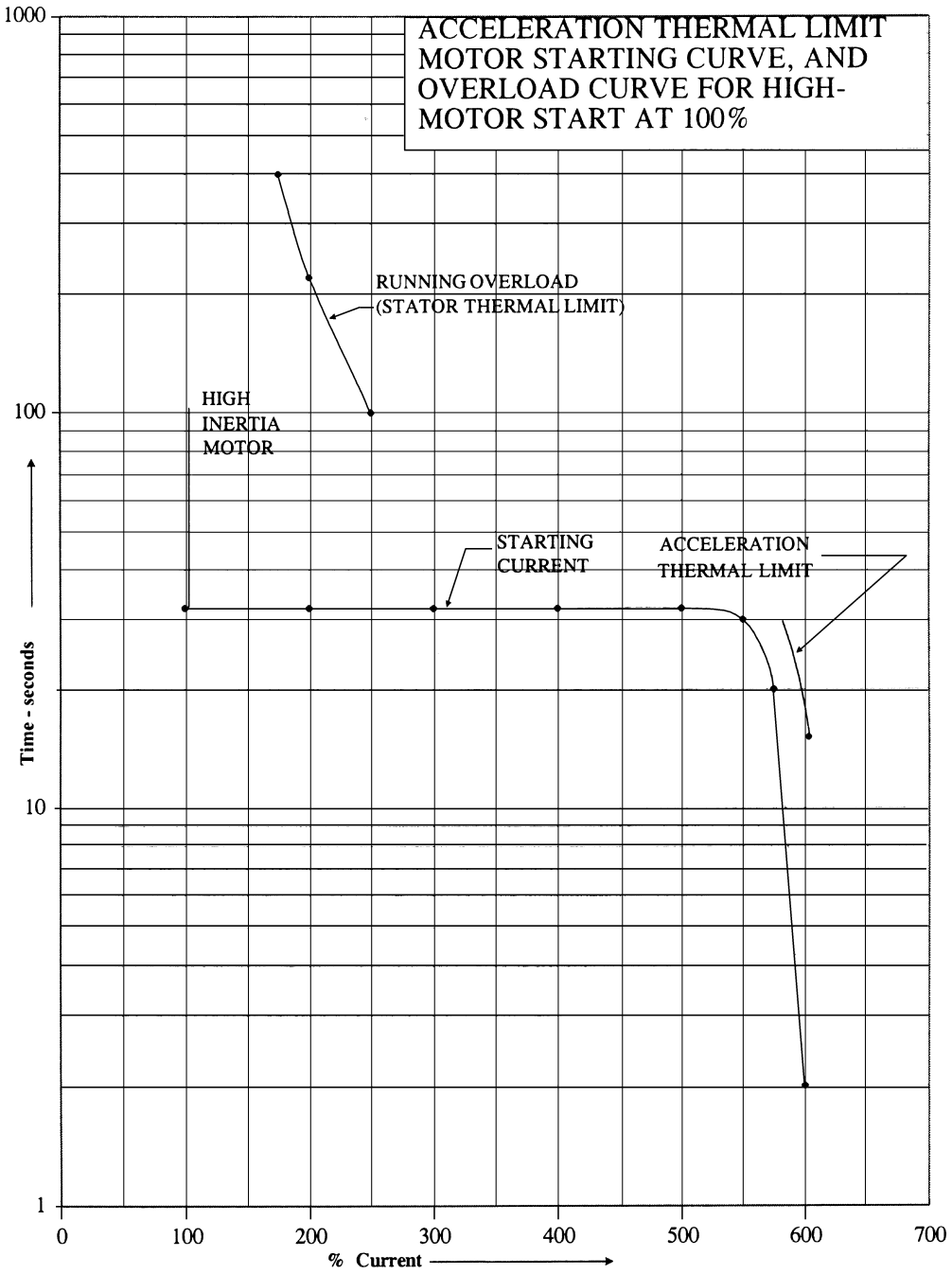

Figure 7—Typical time-current and thermal limit curves for high-inertia motor start

For these applications, the following approaches are possible:

a) Include a motor zero-speed switch (12) that supervises an additional overcurrent relay 51 (START) set to protect the motor against a locked-rotor condition. As soon as the motor begins to accelerate, the 51 (START) is disabled, leaving the overcurrent protection to the longer time overcurrent (TOC) relay 51. When the design is such that the accelerating time exceeds the locked-rotor thermal limit, a zero-speed switch needs to be supplied with the motor [see Figure 8(a)].

Copyright © 2000 IEEE. All rights reserved.

Copyright The Institute of Electrical and Electronics Engineers, Inc.
Provided by IHS under license with IEEE
No reproduction or networking permitted without license from IHS
Not for Resale

b) Apply a distance (mho type) relay, Device 21, to supervise the time-overcurrent (TOC) relay Device 51 (START), which has been set within the locked-rotor thermal limit. For a successful startup of the motor, the mho relay will pick up when the motor is energized, but will prevent unnecessary tripping by resetting before the TOC relay operates. If, upon energization, the motor fails to accelerate, the mho relay will remain picked up, and the motor will be tripped when the TOC relay operates (see Figure 8(b), Figure 9, and Figure 36). Although a single-phase mho relay works, in practice a three-phase relay is used.

The distance relay provides a reliable detection of rotor motion, but is sometimes difficult to set and calibrate to the required accuracy. The relay must drop out fast enough to open the starting overcurrent tripping path as the motor begins to turn. In many cases, the relay is operating very near pickup and must be set very accurately to operate correctly. Usually, in-service startup tests are required because of poor accuracy of the locked-rotor impedance data. Maintaining the high-accuracy set points requires more frequent calibration of the distance relays to correct for normal relay calibration changes.

c) A time-overvoltage relay device (59) may be used instead of the TOC relay Device (51 START) in schemes 1 and 2, since voltage and current are proportional under locked-rotor conditions, as shown in Figure 8(a) and Figure 8(b). The use of a time-overvoltage relay depends on sufficient voltage drop through the source impedance due to the starting current inrush and is, therefore, limited to relatively high-impedance sources (see IEEE Std 620-1996). It is set similar to the TOC relay to obtain thermal protection of the motor for a locked-rotor condition. For some applications, however, the time margin between the reset of the mho relay and pickup of the time-overvoltage relay may be inadequate to permit the use of this relay. Adequate margin is more apt to be obtained using a TOC relay (51 START) because of the decreasing current characteristic of the motor as it accelerates for normal startup.

d) For some applications where the operating time of the TOC relay (51 START) is approximately the same as the startup time of the motor, it is possible that an IOC relay (50) can be used instead of the mho relay (21) [see Figure 10 (a)]. For most high-inertia drive motors, this scheme has limited application. This is because of the difficulty in setting the IOC relay (50) sufficiently low to pick up reliably on motor acceleration, and still resetting it to prevent tripping before the TOC relay (51) times out. The problem is compounded where the accelerating current characteristic of the motor varies with the system operating voltage for abnormal operating conditions. This does not pose a problem, however, with the mho relay application because the impedance characteristic on acceleration is approximately the same, regardless of the voltage at the motor terminals.

e) Use a relay that uses motor voltage and current to calculate the impedance, separating the speed-dependent rotor resistance from the real part of the impedance, and uses it in an I^2R calculation of the watts in the thermal model. The relay will trip in locked-rotor time for a stall condition, but will calculate the slip-dependent heat and allow the start in the high-inertia case (see Zocholl [B114] and Zocholl [B115]).

f) For brush-type synchronous motors, one method for locked-rotor protection uses a device (26F) shown in Figure 4. The effective ratio of the coupling transformer varies with the frequency of the discharge current, so that the tripping time is short for a locked-rotor condition but much larger for a normal acceleration.

Copyright © 2000 IEEE. All rights reserved.
Copyright The Institute of Electrical and Electronics Engineers, Inc.
Provided by IHS under license with IEEE
No reproduction or networking permitted without license from IHS
Not for Resale

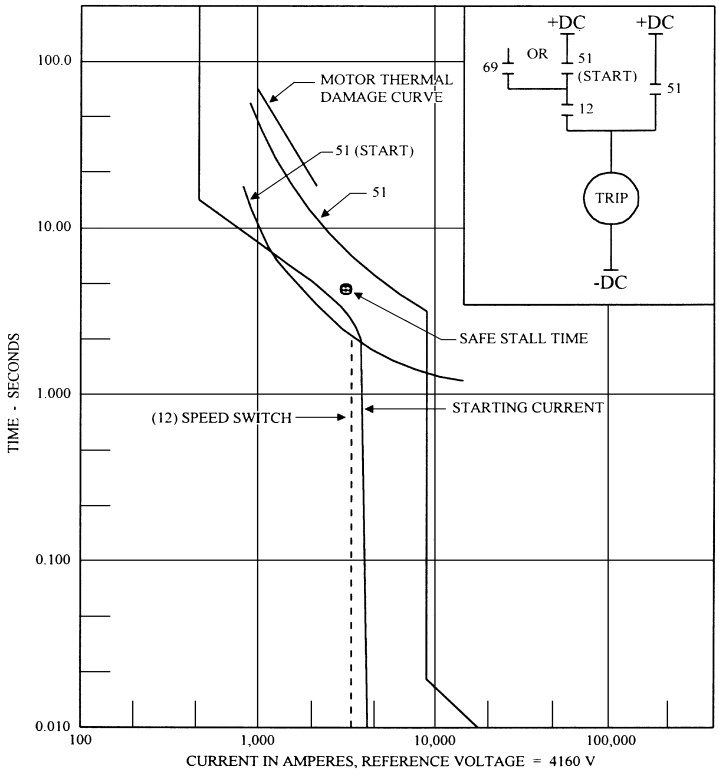

Figure 8 (a)—Starting characteristics using a speed switch (12) supervising the 51 (START) relay

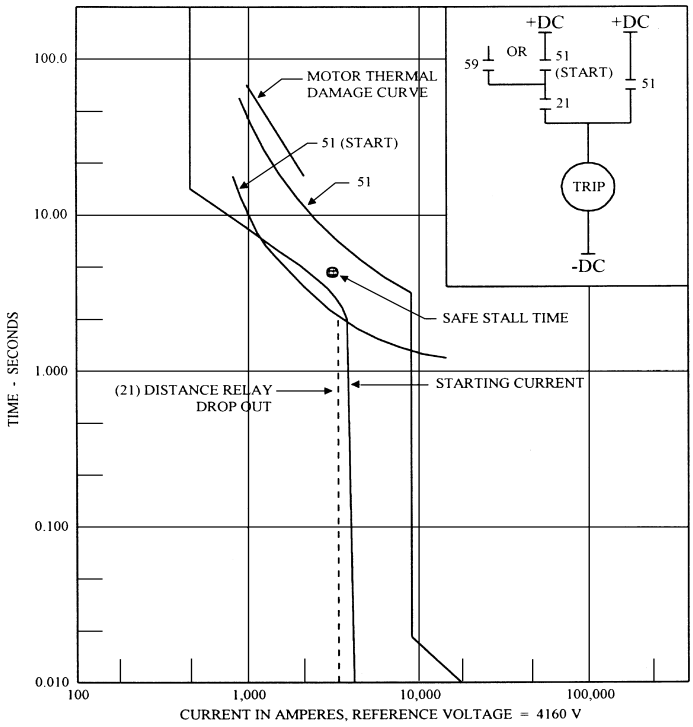

Figure 8 (b)—Starting characteristics using a distance relay (21) supervising the 51 (START) relay

Copyright © 2000 IEEE. All rights reserved.

Copyright The Institute of Electrical and Electronics Engineers, Inc.
Provided by IHS under license with IEEE
No reproduction or networking permitted without license from IHS
Not for Resale

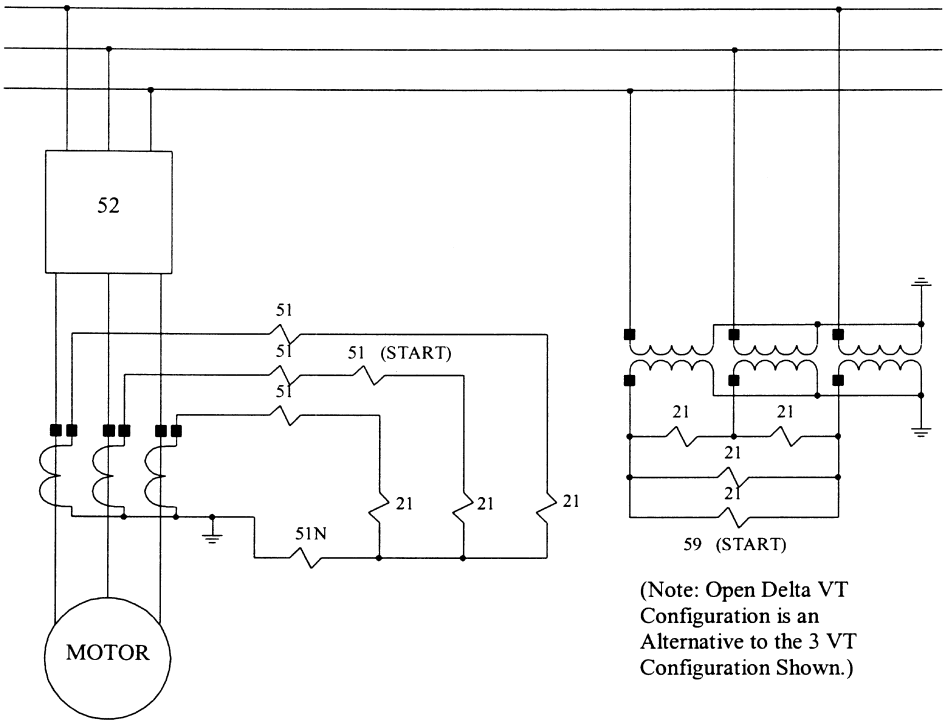

Figure 9—Distance relay and 51 (START) or 59 (START) used for locked-rotor protection

5.2.8 Frequent starting or intermittent operation

During startup, the minimum losses or heat energy developed in the rotor winding of induction motors and the damper winding of synchronous motors equals the kinetic energy stored in the rotating parts at synchronous speed.

In repeated starting and intermittent operation such as jogging, inching, or spotting, the running period is short so that very little heat is carried away by the cooling air induced by rotor rotation. Repeated starts can build up temperatures to dangerously high values in stator or rotor windings, or both, unless enough time is provided to allow the heat to dissipate.

Induction motors and synchronous motors are usually designed for the starting conditions indicated in NEMA MG1-1998, Articles 12.50, 20.43, and 21.43. These standards provide for two starts in succession—coasting to rest between starts with the motor initially at ambient temperature—and for one start when the motor is at a temperature not exceeding its rated load operating temperature. This assumes that the applied voltage, load torque during acceleration, method of starting, and load WK2 are all within values for which the motor was designed. The application and protection of motors having abnormal starting conditions must be coordinated with the motor manufacturer.

Repetitive intermittent operation of the motor types mentioned also can cause mechanical stressing of the stator winding coil ends and of the damper or rotor winding end connections. NEMA MG1-1998, Article 12.50, recommends minimizing the number of starts to maximize the life of the motor. For automatic operation (and in some cases, manual operation) with a remote control device, it may be necessary to provide a fixed-time interval between starts, or limit the number or starts within a period of time to ensure safe operation. A microprocessor-based motor protection system may include this feature.

Copyright © 2000 IEEE. All rights reserved.
Copyright The Institute of Electrical and Electronics Engineers, Inc.
Provided by IHS under license with IEEE
No reproduction or networking permitted without license from IHS
Not for Resale

Information on repetitive start-stop cycling can be found in NEMA MG10-1990.

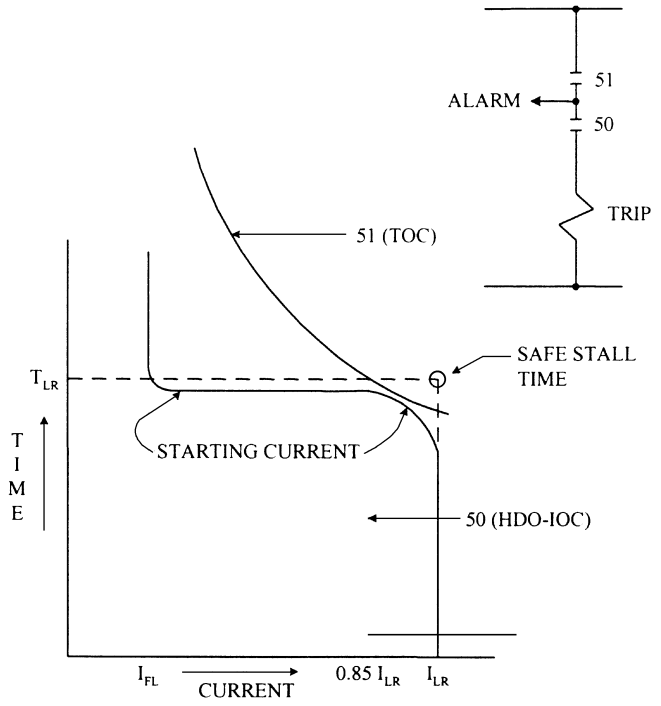

Figure 10 (a)—Locked-rotor protection with TOC element supervised by a high-dropout IOC element

5.2.9 Overtemperature thermal protective devices (49)

There are two main classes of overtemperature thermal protective devices (see 5.2.3). One is a line break type, which interrupts load current directly. The second is a control circuit system using detector devices, which interrupts the motor current through its controller.

Thermal protectors are intended to limit motor-winding temperature and motor current to predetermined values during abnormal motor operating conditions. This prevents premature motor insulation failure.

Abnormal conditions that can result in overheating include overload, stalling, failure to start, high ambient temperature, restricted motor ventilation, reduced speed operation, frequent starting or jogging, high or low line voltage or frequency, mechanical failure of the driven load, improper installation, and unbalanced line voltage or single phasing. Current sensing alone cannot detect some of these conditions, such as restricted ventilation. Temperature sensing alone may be inadequate, for example, with frequent starting or jogging. For some conditions, a coordinated arrangement of current and temperature sensing may be required.

The temperature sensing capability of thermal protectors depends on their location with respect to the motor windings. The protectors should be installed within or on the motor frame in such a manner that the temperature at the device changes in proportion to the winding temperature, and they should be matched to the motor's insulation class.

The advent of microprocessor-based protection systems has made it possible to provide a more refined thermal protection than was possible with electromechanical relays. Since no attempt is made with electromechanical relays to match the thermal time constant of the motor, thermal coordination is achieved under limited operating conditions. Conversely, microprocessor-based protection systems make it possible to

Copyright © 2000 IEEE. All rights reserved.

Copyright The Institute of Electrical and Electronics Engineers, Inc.
Provided by IHS under license with IEEE
No reproduction or networking permitted without license from IHS
Not for Resale

match thermal properties identified by motor data and, as a result, tracks the motor temperature more accurately over a wider range of operating conditions (Zocholl [B115]). Microprocessor systems can also monitor resistance temperature detectors (RTDs) embedded in the motor stator windings to detect temperature rise caused by impaired or lost ventilation not indicated by current. In addition, these systems can monitor temperature detection devices for motor bearings.

5.2.9.1 Control circuit devices sensing motor temperature only

Devices used in this type of control circuit consist of a thermal element and circuit interrupting means. In some forms, the element is calibrated to trip at a fixed temperature value and, in other forms, the trip temperature decreases as the rate of temperature rise increases. The device may automatically reset upon cooling after operating to shut down the motor. These devices are usually connected electrically in the control circuit of the magnetic motor controller that interrupts the motor line current.

Various thermal elements are used, including bimetal snap-acting elements, thermocouples, resistance coils, semiconductor materials (such as thermistors with either negative or positive temperature coefficients), and liquid or gas-filled assemblies.

Operation of the various types depends on the transfer of heat from the motor winding to the thermal element. Since heat flow is involved, the temperature difference between the thermal element and the winding, for a given element mass and installation, is related to the rate of temperature change and increases with the winding heating rate.

For running overload conditions, the rate of temperature change of the winding is generally slow, and the temperature difference between the winding and thermal element is at a minimum. Here, thermal element temperature varies directly with, and easily tracks, winding temperature. When the winding raises the element to its operating temperature, the motor is shut down. For locked-rotor conditions, the rate of increase in winding temperature depends on the motor design. Bimetallic temperature sensors usually are not capable of adequately following winding temperature on locked rotor, and so are used in conjunction with supplementary overload devices. With the supplementary overload device and either manual or automatic restarting, the motor cutoff is initiated by the supplementary overload device detecting the high overcurrent on the first few cycles of a stalled condition; this starts a timing action, which will cut off the motor if the overcurrent exists for a time sufficient to endanger the motor. The winding temperature at cutoff increases on successive restarts until the thermostat operating temperature is reached. At this point, the thermostat trips and assumes control, keeping the motor de-energized until the windings have cooled to the reset temperature of the thermostat and the cycling process can be repeated. The form of bimetallic temperature sensors that also respond to rate of temperature rise may provide effective locked-rotor protection when properly coordinated with the motor thermal characteristic. Either system is capable of providing safe winding protection for manual and automatic restarting on both running overloads and locked rotor.

Sensors such as thermistors, which undergo a change in resistance with temperature, can be small in size and installed directly on, or buried in, the stator winding. These devices can track the winding temperature on locked rotor as well as running overload for some motors; however, for larger motors, they may be inadequate on locked rotor. The resistance change provides a signal to circuitry whose output is in series with the control circuit of a magnetic motor contactor used to interrupt the motor current. The output may be a thyristor, or it may actuate an electromechanical relay. The resistance sensors may be one of three types.

One type of sensor uses a positive temperature coefficient thermistor, which exhibits a large abrupt increase in resistance at a particular design temperature. This change in resistance, occurring at what is known as an anomaly point, is inherent in the material and remains constant once the sensor is manufactured. Sensors are produced with anomaly points at different temperatures to meet application requirements. Another sensor type uses a resistor, which has an approximately linear increase in resistance with temperature. The sensor assumes a specific value of resistance corresponding to each desired value of response or operating temperature. It is used in a circuit that is calibrated to a specific resistance. A third type is a negative temperature

Copyright © 2000 IEEE. All rights reserved.
Copyright The Institute of Electrical and Electronics Engineers, Inc.
Provided by IHS under license with IEEE
No reproduction or networking permitted without license from IHS
Not for Resale

coefficient of resistance sensor, which is used with circuitry similar in concept to that used with the linear resistor sensor. Temperature sensors do not provide locked-rotor protection for motors that

a) Are thermally limited by the rotor, or
b) Have stators having an extremely rapid rate of temperature rise.

In item (a), the rotor reaches its limiting temperature value before the stator reaches its allowable limit. In these motors, sensors responsive to stator winding temperature do not limit the higher rotor temperature to a safe value, and additional means (such as thermal overload relays sensing stator current) are recommended (see 5.2.7). In item (b), the mass of the thermal element and its manner of installation determine the temperature lag between the element and the winding. Carefully installed thermal elements of small mass that reduce this temperature lag, and designs that respond to rate of temperature rise, increase the range of rate of heating of the stator winding over which protection may be obtained.

5.2.9.2 Line break devices sensing motor temperature and current

Devices of this type carry the full motor current through their electrical contacts and interrupt line current directly on operation. Because of physical size limitations, they are available on motors from fractional horsepower sizes through 5 hp single-phase and approximately 10 hp three-phase. Linebreak devices consist of a temperature-sensitive element with a heater(s) and contacts that can interrupt motor current. The elements are designed to simulate the maximum limiting insulation temperature for the winding and open the contacts.

Motor current flow through the heater raises the temperature of the thermal element to approximately the winding temperature. When the winding reaches its maximum allowable temperature, the thermal element reaches its operating temperature and opens its electric circuit to shut down the motor. Locating the protector adjacent to or in the stator winding minimizes the heating required by current in the protector, and further provides optimum correlation of protector and winding temperatures. Approval by the Nationally Recognized Testing Laboratory (NRTL) is related to their use with specific motors for which thermal protectors are designed, based on tests of the motor and protector combination. These motors are designated thermally protected. Both manual-reset and automatic-reset types are available, with the latter designed to provide motor protection even when continuously cycling with the motor stalled or running. Protective devices that do not account for motor operating temperature may not protect the motor during automatic restarting.

5.2.9.3 Control circuit devices sensing motor temperature and current

In this type of motor protective device, RTDs located between the stator coil sides are used in a control circuit responsive to both temperature and motor current. For the unit to operate, both high temperature and overcurrent must exist simultaneously. This device provides protection against locked rotor, repeated starts, overload, or inadequate cooling. Other protective devices will operate on either quantity (i.e., overcurrent, overtemperature)

5.2.10 Current-sensing-type devices

The recommendations given in the NEC for motor overload protection using separate overcurrent (overload) protective devices are referred to in 5.2.3.

The most commonly used device for protection of integral horsepower motors at operating overloads is a thermal overload relay. It simulates the temperature condition in the motor winding by means of current in a heating element, which varies with the motor current. In the event that a current of sufficient magnitude and duration causes excessive heating of the motor winding, the heating element causes a control circuit contact to open the contactor or circuit breaker in the motor circuit. Proper operation depends on the temperature rise of the windings and the heat dissipation of the motor being similar to that of the relay. A heavily overloaded motor should be quickly removed from its power source. A slightly overloaded motor may carry its

Copyright © 2000 IEEE. All rights reserved.

Copyright The Institute of Electrical and Electronics Engineers, Inc.
Provided by IHS under license with IEEE
No reproduction or networking permitted without license from IHS
Not for Resale

load for a considerable length of time before dangerously high temperatures are reached. Overload relays are designed to have characteristics with this inverse current-time relationship.

In one common type of relay, the heating element causes heating and deflection of a bimetallic element to actuate the contact. This type of relay may be arranged for either manual or automatic reset, and may have its trip current adjustable over a limited range, typically ±10%.

In another type of relay, the heating element causes the melting of an eutectic solder, which releases a latch to open the control circuit contacts. This type of relay requires manual reset and is not ordinarily adjustable.

A third type, the thermal induction relay, utilizes the flux produced by a coil carrying the motor current to induce a current in a short-circuited secondary that heats an element to trip the unit.

A fourth relay is a capacitor charge type, where motor line current is sensed by separately furnished current transformers and converted into voltage signals by current-to-voltage transducers. These voltage signals are fed into overload logic, which produces an alarm or trip output. The time vs. current trip characteristic is similar to those of thermal overload devices. However, there is no overshoot or lag as normally found in a thermal overload type relay.

The protection derived by the above four devices depends on their ability to replicate the thermal heating of a motor. The suitability of these devices to protect a T-frame motor requires a comparison of the thermal overload's trip characteristics with the motor's thermal damage curve and time-rated locked-rotor current. These special considerations are described in 5.2.10.3.

Thermal protection for larger motors is often provided using switchgear-type protective relays. These relays are of the following general types:

a) Thermal overload relays (49) incorporating bimetallic elements connected in CT secondaries, thus responding to motor current

b) Temperature relays operating from RTDs (49/26) built into the motor

c) Resistance capacitance (RC) timing circuits energized by current transformers in the motor leads, or combination relays utilizing RC timing circuits and RTDs built into the motor (Boothman [B101]).

d) TOC relays that operate on the induction-disc principle

e) A microprocessor-based system that replicates the thermal characteristics of the motor and provides appropriate protective functions

Overload relays having the same current ratings are available with different time-current characteristics to approximate the motor heating curves of rotating machines with different thermal limitations. As motor heating curves vary substantially, it is desirable to obtain the motor heating characteristics for large or special motors from the manufacturer, and then plot the relay and motor curves to check the protection obtained. Supplementing the thermal relay (Device 49) with other relays, such as a long-TOC relay (51), may be necessary to obtain complete protection. Relays available with adjustable curve shapes allow the heating curve of the motor to be matched very closely. Temperature sensors are useful in supplementing thermal-overload relays by sensing winding temperatures in larger machines. A description of temperature sensors is included in 5.2.9.1, 5.2.9.3, and Boothman [B101].

The use of microprocessor-based protection systems provides a more accurate means of determining the status and temperature of motors under restart conditions than traditional devices. The temperature-resistance histories stored in the microprocessor enable the system to measure fluctuations in temperature at a much faster rate and to respond to them by either alarming the condition, or tripping the motor if temperature is in excess of what is considered acceptable. (See Clause 8 for more details.)

--`,-`-`,,`,,`,`,,`---

Copyright © 2000 IEEE. All rights reserved.
Copyright The Institute of Electrical and Electronics Engineers, Inc.
Provided by IHS under license with IEEE
No reproduction or networking permitted without license from IHS
Not for Resale

5.2.10.1 Protection afforded by thermal overload relays

Most induction motors are protected against damage from unbalanced voltages, running overload, and either a single- or three-phase stalled condition by properly selected thermal overload relays (Device 49) in each phase. However, the rotor heating in some larger induction motors, and in all synchronous motors, is more critical. Such machines may warrant the added investment in control to sense single-phasing or voltage unbalance, such as a phase-voltage relay (Device 47) or negative-sequence current relay (Device 46), to provide specific protection against rotor overheating. (Additional relaying is described in 5.7.1.3.) The NEC requires one thermal element per phase for the protection of all three-phase motors unless protected by other approved means.

After tripping, the relay must cool before it can be reset, and this provides time for the motor winding to cool. Because of its smaller mass, the relay-cooling characteristic is normally somewhat faster than that of the motor. If the overload persists, and the relay is reset either normally or automatically at frequent intervals, it is possible for the motor winding to attain an excessive temperature. For this reason, when an overload relay trips, a check should be made to see whether an abnormal condition exists, such as an overload or phase failure of the power supply. The relay should not be reset repeatedly if the overload condition persists.

For the same reason, relays that reset automatically should not be used with two-wire control or with a circuit, such that the motor would be restarted automatically after an overload trip. Automatic reset should be used only with three-wire control to prevent restarting until a start button or equivalent device is manually actuated.

Thermal overload relays operated by motor current do not protect motors against overheating due to inadequate ventilation.

5.2.10.2 Ambient temperature effects and ambient-compensated types

General and special-purpose motors and industrial control equipment are rated for use in a maximum ambient environment of 40 °C. When the normal temperatures at the control and motor are different, in general, a heater may be used that differs by one size for each approximate 15 °C difference in temperature; however, the control manufacturers' recommendations should be obtained because of the different ambient temperature sensitivities that overload relays exhibit. When the relay ambient is higher than the motor, a higher rated heater is used and vice versa.

The ambient-compensated type of thermal overload relay has essentially the same minimum operating current and time-current characteristics, regardless of its ambient temperature. Thus, it allows the motor to carry its rated load regardless of changes in relay ambient temperature. For essential drives, this prevents the motor from being shut down when carrying its normal load, even though the relay ambient temperature may be abnormally high. Solid-state relays can be compensated for ambient variations.

The ambient-compensated type of relay prevents nuisance tripping due to high relay ambient temperature. Whether this is achieved without sacrifice of motor insulation life depends on the motor-winding temperature profile over several years. In an abnormally low motor ambient temperature, the compensated relay allows the motor to carry only the rated current of the relay and, therefore, protects the motor from inadvertent overload, which might be possible without ambient compensation. It is generally not necessary to use compensated relays when the relay and motor are in the same ambient.

5.2.10.3 Special application problems

For certain duty cycles, such as crane applications, it may be difficult to obtain protection at operating overloads and still permit the motor to perform useful work within its thermal capabilities on a short-time basis. Long acceleration times and below normal speeds characterize these duty cycles. In addition, the normal

Copyright © 2000 IEEE. All rights reserved.

Copyright The Institute of Electrical and Electronics Engineers, Inc.
Provided by IHS under license with IEEE
No reproduction or networking permitted without license from IHS
Not for Resale

cooling effect of a running motor is greatly reduced. To compensate for these conditions, motors are usually derated.

In some instances, the difference between the thermal time constants of the motor and the conventional thermal overload relay can result in premature relay operation. Nuisance tripping may be prevented by applying a trip device with a longer trip characteristic to match the thermal time constants of the motor. Temperature sensors may also be necessary for complete protection. For the type of duty cycles encountered on machine tools, however, thermal overload relays have been used successfully. For high-inertia and other loads requiring a long accelerating time, a thermal overload relay selected to protect the motor at operating overloads may operate during the accelerating cycle, or even after the motor has reached rated speed. The cause of the nuisance tripping is the thermal storage characteristic of the overload device. Again, a comparison of the motor and overload thermal characteristics must be made, thus avoiding the mistake of simply increasing the size of an overload trip device possessing incompatible thermal characteristics.

Generally speaking, directly heated type thermal overload relays designed for long accelerating time applications have proven to be the most suitable protective devices for small motors. Other methods to obtain protection are described in 5.2.7 (see ANSI/NEMA ICS 1-1990). ANSI/NEMA ICS 2-1988, Part 222, includes both definitions and the recommended nomenclature for expressing the performance characteristics. Overload relays are classified in accordance with the response times at a fixed multiple of the current ratings. For example, a Class 20 overload relay can be expected to operate in not more than 20 s at a current value corresponding to six times its assigned current rating in an ambient temperature of 40 °C, while a Class 30 relay can be expected to exhibit an operating time of not more than 30 s at the same overcurrent multiple and ambient temperature. Overload relays with lower response times or for long starting applications are available to meet the protective requirements imposed by the wide variety of motor designs.

In most applications, general and special-purpose NEMA T-frame motors may be considered to be protected at operating overloads when NEMA Class 20 overload relays are used for this function. Both general-purpose and special-purpose motors assembled in NEMA U-frame sizes can usually be protected by the NEMA Class 30 relay; however, Class 20 overload relays should be applied unless individual motor data confirms suitability of Class 30. Replacement of a U-frame motor with a T-frame motor may necessitate the replacement of the overload trip device as well. T-frame motors are designed to be smaller and lighter than U-frame motors and utilize improved insulation. The better insulation results in a higher temperature rise rating for a T-frame motor. The T-frame motor is more sensitive to line current, because an increase in current results in a greater temperature rise than that of the U-frame motor. The motor's thermal damage curve and time at rated locked-rotor current must be compared to the thermal overload's trip characteristic to ensure motor protection. The overload device should operate prior to the manufacturer's stated maximum allowable time at rated locked-rotor current. Similarly, the overload device should have a characteristic similar to that of the motor's thermal damage curve, tripping prior to motor damage.

The manufacturer of the combined equipment usually selects overcurrent devices for the protection of hermetic and other definite-purpose motors, rather than the user, and equipment warranties can be voided by alterations. Some overload relays allow independent locked-rotor and running overload protection adjustments. These electronic devices are commonly supplied by current transformers, and are adjustable over a range of permissible times at locked-rotor current. The overload characteristic of the device is adjustable as well, typically ranging from 90% to 125%. The influence of ambient temperature is minimal on these devices.

5.2.11 Motors operating in ungrounded systems

When the neutral of a system is not grounded, it is possible for destructive transient overvoltages that are several times normal to appear from line to ground during normal switching of a circuit having a line-to-ground fault. The specific magnitude of voltage would be dictated by the circuit topology (X/R ratio). These overvoltages may cause failure of the stator winding insulation of the motors on the system. For this reason, it is prudent to identify and isolate the ground faults as expeditiously as possible.

Copyright © 2000 IEEE. All rights reserved.
Copyright The Institute of Electrical and Electronics Engineers, Inc.
Provided by IHS under license with IEEE
No reproduction or networking permitted without license from IHS
Not for Resale

5.3 Rotor thermal protection

Rotor thermal protection for synchronous motors logically includes both the insulated exciting field winding and the uninsulated starting damper or cage winding. The field winding is not normally temperature monitored during rotation. However, if desired, the field winding temperature can be determined for brush-type (slip rings) motors by the rise-of- resistance method; an accurate evaluation of the rotor hot-running resistance may be obtained using the brush voltage and field current. An allowance for brush voltage drop may be made for improved accuracy. Another method of obtaining the field winding voltage uses soft metallic points momentarily touched to the slip ring to measure voltage directly and thus avoid measuring brush voltage drop.

The damper winding of a synchronous motor or the cage winding of a squirrel-cage motor performs the function of starting the load and thus must be protected against damage. During stalled conditions, dangerously high damper-winding temperatures may be reached in a few seconds. Excessive temperature can damage the damper-winding material, thereby changing its physical characteristics. Repeated excessive thermal stresses can cause the winding bars and short-circuiting end rings, or the brazed joints between them, to crack (see 5.2.8).

For most synchronous machines, the allowable stall time of the rotor is too short to use a stator-winding, temperature-sensing device to provide protection of both rotor and stator. This type of machine is typically damper-winding thermal limited. The methods outlined in 5.2.7, or the use of a long-time stator overcurrent relay, can provide rotor thermal protection. There are also other devices available, such as the damper-winding thermal relay (Device 26) listed in Table 5.

While running, excessive temperatures in parts of the rotor of either synchronous or induction motors can result from excessive unbalanced (negative-sequence) currents. Guidance for derating induction and synchronous motors due to voltage unbalance is provided in NEMA MG-1-1993, Parts 20 and 21, respectively. Negative-sequence currents reduce the available accelerating torque. This lengthens the accelerating time and further contributes to motor overheating (see 5.4.4 and 5.7.1.3).

Operation of synchronous motors drawing reactive power from the system beyond its reactive capability can result in overheating in parts of the stator and rotor that do not normally carry current (end iron heating and redistribution of stray load loss currents). Some loss-of-field relays (40) can detect this phenomenon (see 7.2.5).

5.4 Stator fault protection

5.4.1 General consideration

The current flowing to a fault within a motor can vary greatly in magnitude. The main factors that affect the magnitude of fault currents are the source, motor feeder, and grounding impedance; the type of fault (phase or ground); and the location of the fault in the motor winding.

In the case of high-magnitude, short-circuit currents, immediate isolation of the faulted motor is always necessary. However, when the fault current is only a few amperes and the motor is a critical one, an alarm without immediate tripping is sometimes justified.

5.4.2 Effects of system and motor characteristics

On systems with low source impedance (high fault current), there is little difficulty for protective relays to distinguish between load, starting, and short-circuit currents. On systems grounded through a resistance or impedance, the ground-fault current is approximately equal to the prefault voltage-to-ground at the point of fault, divided by the grounding or neutral impedance. In a solidly grounded system, the maximum

Copyright © 2000 IEEE. All rights reserved.

Copyright The Institute of Electrical and Electronics Engineers, Inc.
Provided by IHS under license with IEEE
No reproduction or networking permitted without license from IHS
Not for Resale

ground-fault current is of the same order of magnitude as the three-phase fault current, assuming zero fault impedance for faults near the ground source.

Internal faults in motors are usually line-to-ground, or line-to-line with or without involving ground. Three-phase faults that do not involve ground are most likely to occur near the line terminals. Faults also may occur from turn-to-turn in the same phase, or between parallel windings in the same phase of a multiple winding. Certain types of faults are more likely to occur than others, due to the motor design and the application. A short circuit in a wye-connected motor can be

a) Near the line end
b) Near the middle
c) Near the neutral end of the winding

In the first case, the voltage across the faulted portion of the winding is the full voltage of the system. With the fault near the neutral end, the voltage across the faulted portion of the winding is quite small. The corresponding short-circuit currents are high at the line end, and are extremely small or essentially zero for faults near the winding neutral.

In a delta-connected machine on a grounded-neutral system, sensitive ground-fault protection can be obtained for the entire winding, because all portions of the winding are at a minimum of 50% of line-to-neutral voltage above ground potential.

The trip settings of the protective relays for motor protection must be carefully selected to ensure security during normal operation. Probably, the most important of these conditions is motor starting. Typical starting current magnitude is approximately six (6) times normal full load current. However, it may be lower or much higher for a particular motor design. This initial inrush current contains a dc component to which some protective devices are responsive (see 7.2.10.3).

CT performance is highly influential in relaying system behavior and can be estimated by methods described in IEEE Report [B82] or Rockefeller [B93].

5.4.3 Phase-overcurrent protection

Motor circuits complying with the NEC are required to have one overcurrent unit (series tripping device, protective relay, or fuse) in each phase conductor, or other approved means. When fuses are used, the consequences of unbalanced operation and backfeeding of faults following a blown fuse must be considered. IOC relays (50) are used to detect motor supply cable faults as well as severe stator faults. They may be connected to trip directly, or through a short time delay to coordinate with the asymmetrical starting current when set just above the locked-rotor current (see Figure 37 and Figure 38). When the motor kilovolt ampere (kVA) rating is less than half that of the transformer (as a rule of thumb), instantaneous relays can be used for phase protection. Where the starting current value approaches the fault current (motor kVA) greater than half of the transformer rating), differential relays should be used.

When a more sensitive setting than allowed by an IOC is required, a TOC relay (51) is applied. TOC relays and motor protection systems are available with time-current characteristics suitable for coordination with motor-starting characteristics and thermal limits.

A TOC relay can usually be set to provide the desired stator and rotor protection and still permit the rotor to accelerate to running speed without an undesired trip. Normally, the TOC relay is connected to trip directly; however, when desirable, it may be supervised by a high-dropout IOC relay [see Figure 10(a)]. The IOC relay allows tripping for severe faults, but permits an alarm only for moderate overloads or minor faults. The HDO unit is required to drop out quickly below locked-rotor current, preventing an undesired trip during

Copyright © 2000 IEEE. All rights reserved.
Copyright The Institute of Electrical and Electronics Engineers, Inc.
Provided by IHS under license with IEEE
No reproduction or networking permitted without license from IHS
Not for Resale

startup by the TOC relay. This latter scheme allows a more sensitive setting of the TOC relay without fear of an undesired trip due to a slight overload.

Two TOC relays, with different time-current characteristics, have occasionally been applied to obtain a better match to the motor thermal limits during startup and locked rotor. The two relays are applied when the characteristic of a single relay cannot provide overall protection for the motor thermal damage curves for both starting and running conditions. As shown in Figure 10(b), the pickup of the (51-1) relay is set to provide overload protection for the majority of the motor's running thermal damage curve. The purpose of the (51-2) relay is to provide specific protection near the motor's allowable locked-rotor thermal limits and, therefore, has a much higher pickup and a more inverse characteristic. The setting of these devices is described in 7.2.10.7.

For types of motors where starting currents are quite low, the use of extremely inverse or inverse TOC relays gives substantially improved protection for short circuits in the ranges immediately above the starting current.

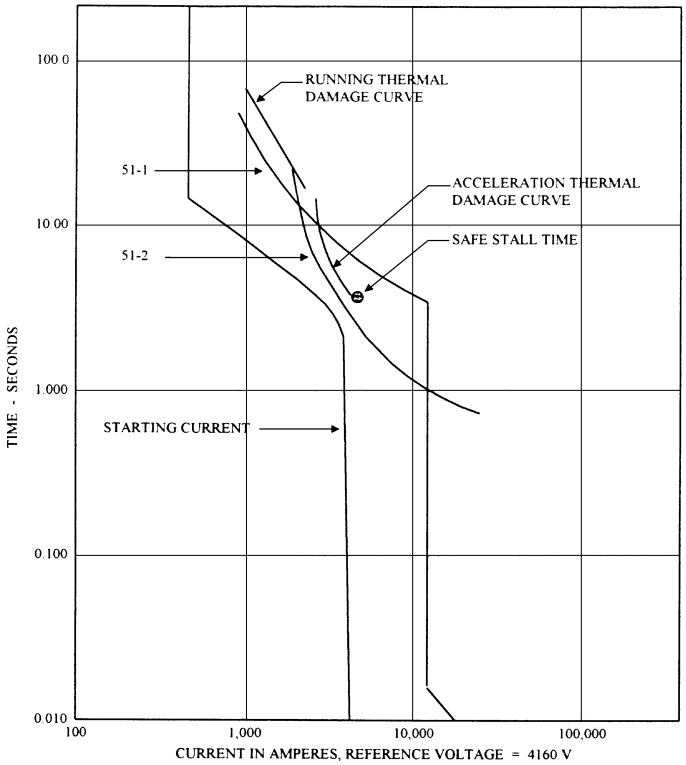

Figure 10 (b)—Thermal damage protection utilizing two overcurrent relays with different pickups and timing characteristics

5.4.4 Negative-sequence protection

Negative-sequence current is contributed by the motor or system when

a) An unbalanced voltage condition exists (e.g., open-phase faults, single-phase faults, or unbalanced load)
b) Stator coil cutout occurs during a repair
c) There are shorted turns in the stator winding

Copyright © 2000 IEEE. All rights reserved.

Copyright The Institute of Electrical and Electronics Engineers, Inc.
Provided by IHS under license with IEEE
No reproduction or networking permitted without license from IHS
Not for Resale

These negative-sequence currents induce double line-frequency currents that flow in the damper or rotor parts. The magnitude of the double line-frequency current depends on the location of the fault, number of turns shorted, mutual induction, and system and motor impedance. The danger to the rotor parts is a function of the unbalance in the stator current (see 5.7.2.3).

5.4.5 Ground-fault protection

On solidly grounded systems, phase overcurrent relays, direct-acting trip devices, and fuses afford a certain measure of ground-fault protection. For motors where greater sensitivity to ground faults is required, ground relays should be used. Ground relays can be connected residually or to a ground sensor by using a toroidal CT that encircles all three-phase conductors.

5.4.5.1 Residually connected ground relay

Figure 31(b) shows a residually connected ground TOC relay (51N). Theoretically the 51N relay operates only on the zero-sequence current due to ground faults. In practice, however, current may flow through this residual circuit because of the unequal outputs of the phase-current transformers. This may be due to unequal burdens on the current transformers, the difference in the CT characteristics caused by variations in manufacturing, or CT saturation caused by high motor-starting currents. Because these unbalanced currents are present, it often becomes necessary to use time-delay residual relays so that undesired tripping on starting does not occur with sensitive current settings on the relay. If instantaneous, residually connected relays (50N) are used, they may trip due to the false residual that may occur during motor starting, or from feedback for an external fault unless they are set fairly high. Where a large ground-fault current exists, this presents no problem; however, where high-impedance grounding is used, these relays may be of little value. False residual current can be decreased markedly by increasing residual burden through the use of a lower tap value, or by adding a series resistance. However, the former also increases sensitivity to ground-fault currents. Lower phase burden (e.g., through the use of solid-state phase relays) also reduces the false residual current.

Care should be taken when applying residually connected ground relays where several relays need to be coordinated and in the case of low-resistance grounded systems.

The combination of three (3) phase relays and one residually connected ground relay connected to three current transformers is often used to provide phase- and ground-fault protection as shown in Figure 31(b).

Figure 32 illustrates a method of obtaining sensitive ground-fault protection with an IOC relay (50G). The toroidal CT encircles the three-phase conductors, summing the flux produced by the current passing through the conductors within the CT. This arrangement allows all positive- and negative-sequence currents, including their dc components, to be magnetically canceled out within the CT, so that only the zero-sequence ground-fault current appears in the relay. This means that under all balanced conditions, including single-phase loading, all currents leave and return through the toroidal CT. The net flux within the CT will be zero. It is only when the current returns by a path outside of the CT that a flux imbalance will occur within the CT, resulting in a proportional current flow to the ground relay. A small possibility of false tripping does exist if an unbalanced current (due to inrush or a through phase fault) creates a sufficient net flux, operating the relay.

When using a grounded conductor, the toroidal CT should encompass only the phase conductors and not the grounded conductor. Figure 11 shows two methods of grounding the cable sheath when using a toroidal CT. Note that the cable shield ground is established on the load side of the CT in Figure 11(a) and, therefore, does not contribute to the flux within the CT. In Figure 11(b), the shield lead is doubled back from the source side to the load side of the CT, resulting in magnetic flux due to current in the shield summing to zero within the CT. If the cables in Figure 11(b) have individual shielding tape or braiding, they can be jumpered together on the source side with a shield lead brought back through the CT. The purpose of both examples is

Copyright © 2000 IEEE. All rights reserved.
Copyright The Institute of Electrical and Electronics Engineers, Inc.
Provided by IHS under license with IEEE
No reproduction or networking permitted without license from IHS
Not for Resale

to ensure the current measured by the ground relay reflects the ground-fault current and eliminates cancellation of the outgoing phase current with the returning current in the grounded sheath.

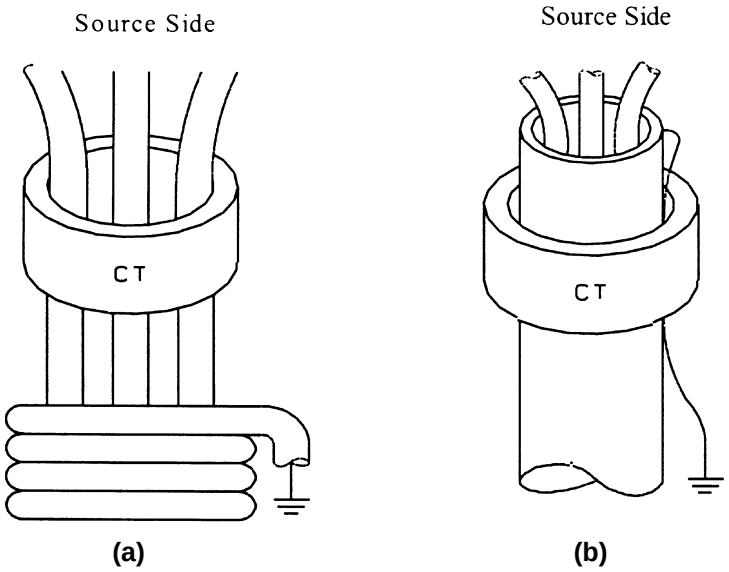

Figure 11—Toroidal CT cable sheath grounding

Selection of the optimum toroidal CT ratio and quality is important. For minimum primary current pickup, the CT exciting impedance (as indicated by the excitation or saturation curve) and relay impedance should be matched. Therefore, the lowest primary current pickup value may not occur at the lowest CT ratio for a given relay burden. Primary current pickup values in the range of 4–12 A are practical, utilizing a plunger or induction-disk relay; approximately 1 A primary current pickup can be achieved with sensitive relays. The latter may have to be time delayed to prevent operation due to zero-sequence cable capacitance current flow during external ground faults.

When surge-protection or surge arresters are connected at the motor terminals, the sensitivity of the toroidal CT ground-protective scheme should be considered. The relay may need to be made insensitive to the capacitor inrush current or to the arrester power follow current. The relay must not pick up on these transient currents or, alternatively, a short-time delay must be used.

5.4.6 System-ground protection

Where a group of motors is supplied from a transformer having a grounded neutral connection, ground-fault currents may be detected in the ground-to-neutral connection of the transformer.

A CT with a TOC relay (51N) is inserted in the neutral conductor for direct- and resistance-grounded systems. This relay must coordinate with the ground relays in each feeder to avoid tripping the entire bus for a fault in one feeder (see Figure 12).

Copyright © 2000 IEEE. All rights reserved.

Copyright The Institute of Electrical and Electronics Engineers, Inc.
Provided by IHS under license with IEEE
No reproduction or networking permitted without license from IHS
Not for Resale

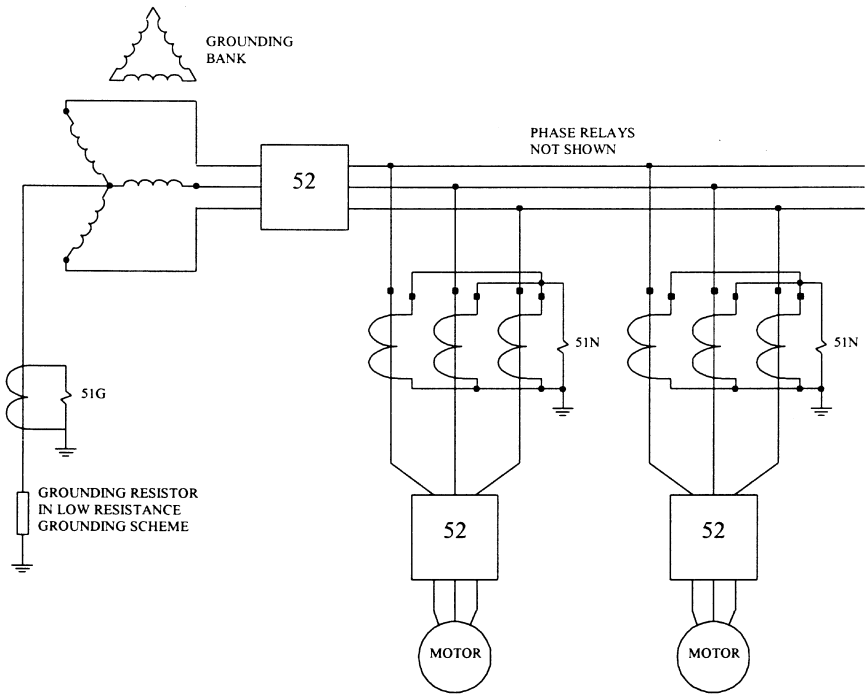

Figure 12—Bus ground protection by CT and overcurrent relay

A distribution transformer with a secondary loading resistor and an overvoltage relay (59G) is employed between the supply transformer neutral and ground to provide sensitive, high-resistance ground protection (see Figure 13). Since the loading resistance reflected into the neutral is multiplied by the square of the transformer ratio, fault currents are limited to a very few amperes. Hence, the relay may be used for alarm or tripping. However, tripping is usually recommended to avoid the possibility of a second ground causing an interphase fault. When high-resistance neutral grounding is used, the sensitivity of the system ground relaying must be commensurate. This usually requires the application of donut CTs on the feeder circuits to obtain the required sensitivity. These CTs are combined with either instantaneous or time-delayed overcurrent relays for feeder ground protection. An overcurrent relay supplied by the residual current of the phase CTs would not have the sensitivity necessary to pick up on the limited ground-fault current.

Line-to-line, voltage-rated voltage transformers, with primaries wye-connected and grounded, should be used to detect ground faults on ungrounded and high-resistance grounded systems (see Figure 14). Care should be exercised in sizing the resistor in accordance with established grounding practice (see IEEE Std C37.101-1993 and IEEE Std C62.92-1987), and in selecting a voltage relay that is insensitive to third harmonics. The secondaries are connected broken-delta, across which a loading resistor is connected in parallel with a voltage relay (59G). Single-point grounding of the secondary should be used.

Motors that are supplied by adjustable-speed drives are protected by devices on the output side of the inverter. The means of protection varies from manufacturer to manufacturer and inverter to inverter. For example, a typical inverter output might be designed to shut off when the inverter current exceeds 200% of its rated value. For ground-fault protection, an inverter output might be designed to shut off when a ground-fault current exceeds approximately 50% of the inverter rated current. For adjustable-speed drives applied on high-resistance and ungrounded systems, ground faults can be detected as described in the previous paragraphs of this subclause.

Copyright © 2000 IEEE. All rights reserved.
Copyright The Institute of Electrical and Electronics Engineers, Inc.
Provided by IHS under license with IEEE
No reproduction or networking permitted without license from IHS
Not for Resale

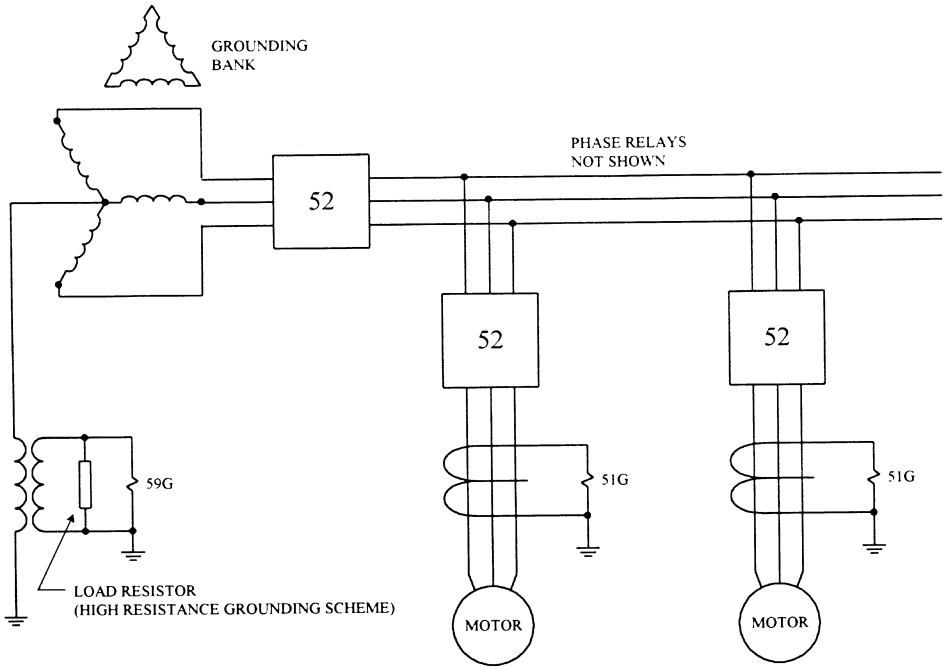

Figure 13—Bus ground protection by distribution transformer and overvoltage relay

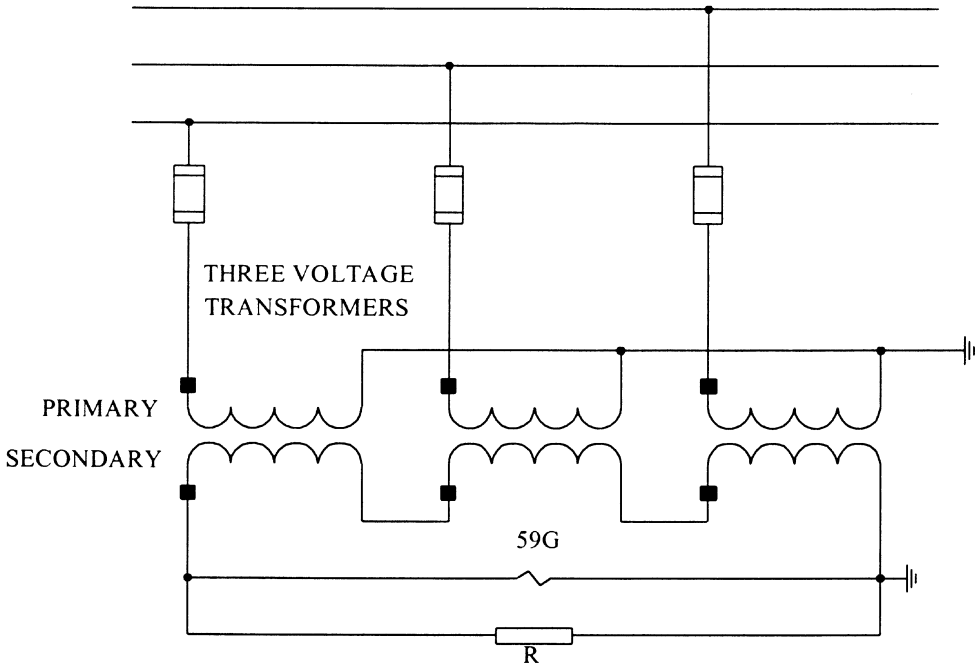

Figure 14—Ground detection relaying for an ungrounded system or a high-resistance grounded system

--`,,`-`-`,,`,,`,`,,`---
Copyright © 2000 IEEE. All rights reserved.

Copyright The Institute of Electrical and Electronics Engineers, Inc.
Provided by IHS under license with IEEE
No reproduction or networking permitted without license from IHS
Not for Resale

The input side of an inverter is not normally supplied with protection. However, it is not uncommon for the customer to specify this protection. If it is specified, the manufacturer would be required to coordinate the inverter input protection with its output protection. Under these conditions, source-side protection would then be required only to coordinate with inverter input protection and not include the motor (see 6.3 for further detail).

5.4.7 Differential protection

Differential relay protection is a scheme in which the current entering a winding is matched against that coming out of the winding. These relays detect low-magnitude fault currents during normal loads, and do not trip falsely during high-magnitude external faults or during starting periods. Differential relays cannot detect turn-to-turn faults in the same winding.

Figure 15 shows common connections for differential protection of wye- and delta-connected motors. The motor feeder cables and the breaker, where possible, are also included within the protected zone. Figure 15(a) shows connections for differential protection of a wye-connected motor; Figure 15(b) shows those for a delta-connected motor. The relay responds to the percentage difference between the incoming and outgoing current values. Current transformers should have matched characteristics and should not be used for any other purpose without a careful check of the effect of CT performance. Three current transformers are located within the switchgear so as to include the motor cables within the protection zone. The other three current transformers are located in the neutral connection of the motor. Six leads must be brought out of the motor. This must be specified when the motor is purchased.

Figure 16 illustrates the flux-balancing, primary-current differential protective scheme. Both ends of each motor winding serve as the primary winding of the current transformers. This scheme can be used for both wye- and delta-connected motors. The differential relay (87) detects the difference or internal fault current. Extremely sensitive phase and ground protection can be obtained by using only an overcurrent relay. Where the through-type CT is located at the motor, as is the usual case, this scheme requires that other devices be applied for the protection of the motor feeder cable. The cables from the switchgear to the motor cannot be included in the differential zone unless the current transformers are located in the switchgear, which, in turn, requires that neutral leads also be routed to the switchgear.

One method of providing differential protection for a split-winding motor and its feeder cable using line-current transformers of twice the ratio of the neutral current transformers is shown in Figure 17. An alternative method is shown in Figure 18. This arrangement includes a differential relay (87) connected as shown in Figure 15(a), and a second set of TOC relays (60) connected as shown. This scheme requires a total of 12 transformers and 6 relays, but provides approximately twice the sensitivity of that shown in Figure 17.

Figure 19 illustrates an extra-sensitive differential ground-fault protection scheme. The product-type relay (87N) receives its polarizing signal from a CT connected in the system neutral. Voltage polarization is also possible by using a set of wye-broken-delta voltage transformers. The product-type relay (87N) can be used when the available ground-fault current is limited to a very low value, and is used as an alternative to the toroidal CT with relay (50G) scheme when the toroidal CT does not accommodate the cable space requirements. The product-type relay is directional, and this must be considered in the connection of the relay. It is chosen because of its sensitivity, not because of its directional characteristic.

Copyright © 2000 IEEE. All rights reserved.
Copyright The Institute of Electrical and Electronics Engineers, Inc.
Provided by IHS under license with IEEE
No reproduction or networking permitted without license from IHS
Not for Resale

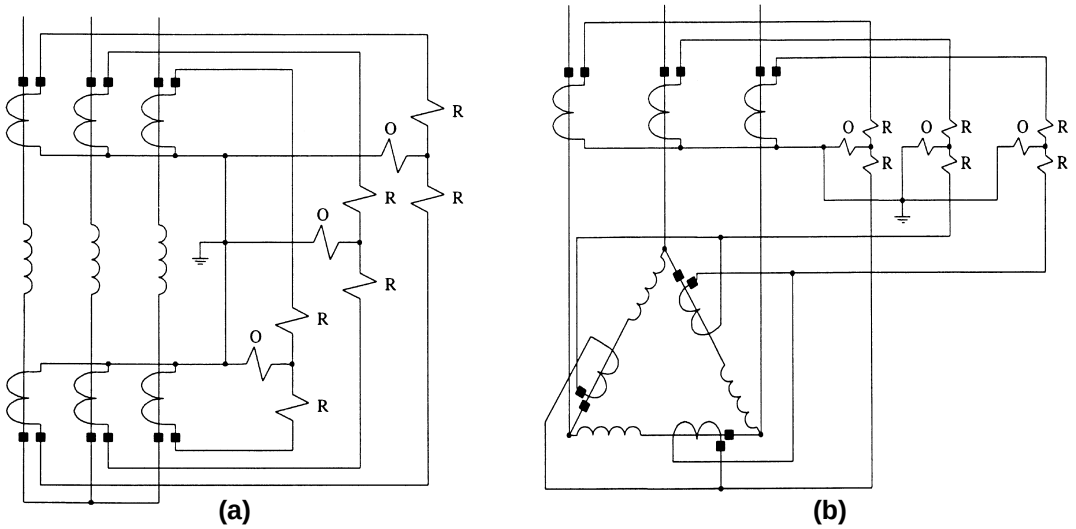

Figure 15—Differential protection of (a) wye-connected and (b) delta-connected motors

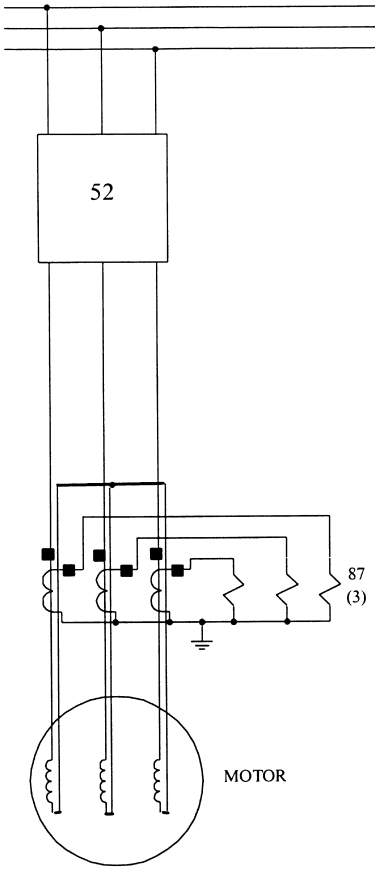

Figure 16—Flux-balancing current differential scheme

Copyright © 2000 IEEE. All rights reserved.

Copyright The Institute of Electrical and Electronics Engineers, Inc.
Provided by IHS under license with IEEE
No reproduction or networking permitted without license from IHS
Not for Resale

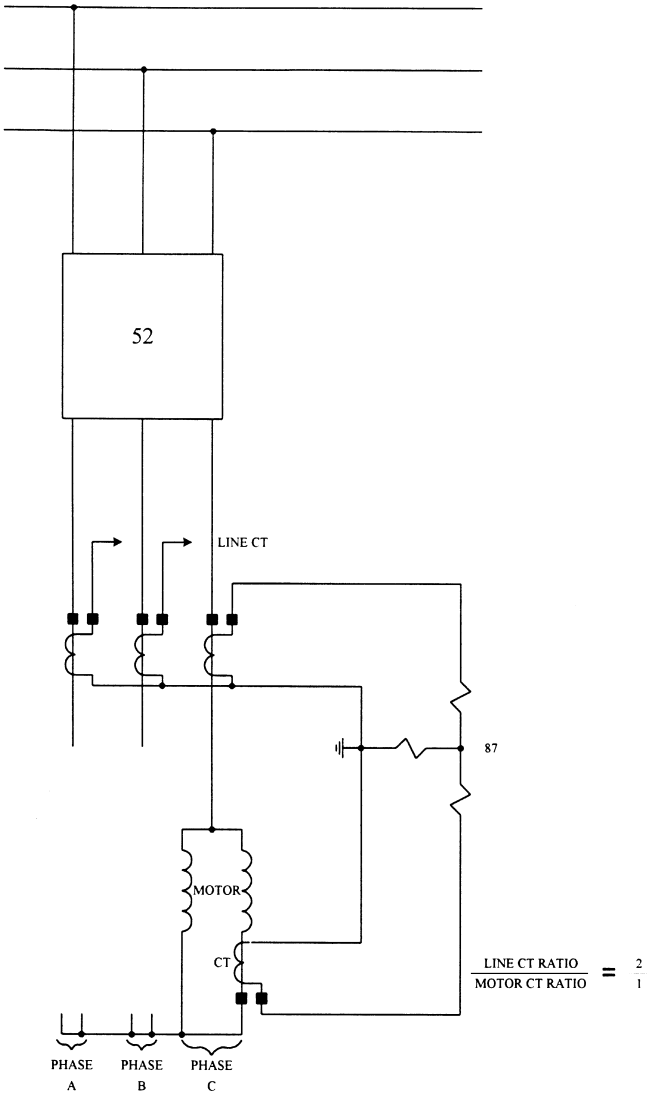

Figure 17—Differential protection of split-phase, wye-connected motor (turn-to-turn fault protection)

5.5 Rotor fault protection

5.5.1 Induction-motor protection

Because of the construction of squirrel-cage induction motors, protection of the rotor circuit is not considered necessary. Wound-rotor motors may be protected for slip-ring and rotor flashover to ground by the circuit in Figure 20. For wound-rotor motors, relays with constant V/Hz characteristics should be used because of the changing slip frequency experienced by the rotor. This protection is not effective at or near synchronous speed, because the rotor-induced potential is greatly reduced. Many wound-rotor installations depend on the stator IOC device to provide rotor flashover protection. The reliability depends on system impedance and motor parameters.

Copyright © 2000 IEEE. All rights reserved.
Copyright The Institute of Electrical and Electronics Engineers, Inc.
Provided by IHS under license with IEEE
No reproduction or networking permitted without license from IHS
Not for Resale

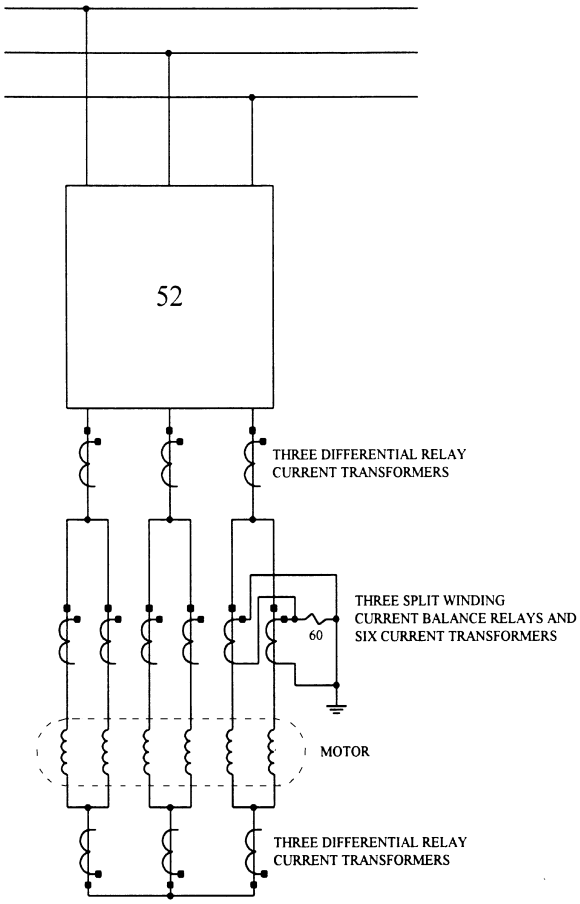

Figure 18—Differential protection—alternative method for split-phase (turn-to-turn) fault protection

5.5.2 Synchronous motor protection

When the fields supply and rotor circuit operate above ground, one rotor ground does not require immediate tripping, and indication-only is permissible as in Figure 21. Two common methods of ground protection are shown in Figure 22 and Figure 23. The sensitivity of these circuits is reduced when a ground connection appears near the center of the rotor winding or the supply source.

One method for overcoming this is shown in Figure 23. Without the varistor, a ground fault at the center of the field winding still results in a zero voltage at the 64F relay. With the varistor in the circuit, there is still a point in the field winding that results in zero voltage to device (64F) relay. However, any change in the field voltage moves the zero point because of the varistor's nonlinear characteristic, so the voltage at device (64F) relay is no longer at zero, and it could operate. While starting, high ac rotor-winding potential exists, making it desirable to connect the detection circuit across the dc field supply rather than the rotor winding. This will also ensure that the source is free of ground connections prior to synchronization.

A second ground results in a short circuit in part of the rotor winding. This unbalances the air gap fluxes and magnetic fields, causing local heating of the rotor and excessive vibration, and possibly disastrous rubbing between the stator and rotor.

Copyright © 2000 IEEE. All rights reserved.

Copyright The Institute of Electrical and Electronics Engineers, Inc.
Provided by IHS under license with IEEE
No reproduction or networking permitted without license from IHS
Not for Resale

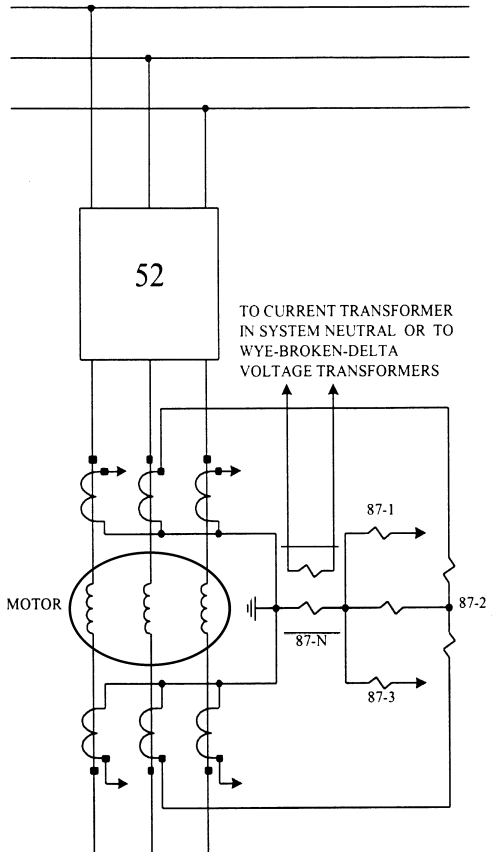

Figure 19—Sensitive differential protection with product-type relay

Short-circuit protective devices located in the rotor circuit are generally not used. When a short circuit occurs at the slip rings, the stator power-factor relay or the loss-of-field relay is expected to trip the motor. Low-magnitude faults in the exciter power supply system are often cleared by its own overload protection.

5.6 Bearing protection

5.6.1 General

Bearings are designed to minimize friction between stationary and moving parts. They are also used to support and control the rotating shaft motion. Bearings can be journal or thrust types, for radial or axial loads, respectively. In general, antifriction bearings are used on smaller motors, and fluid-film bearings are used on larger motors, particularly at high speeds.

5.6.2 Antifriction (ball, roller) bearings

Ball and roller bearings transmit the rotor weight by direct contact with rolling action, and have low starting friction. This type of bearing generally uses grease as a lubricant. Some of the large guide- or thrust-type bearings may use oil. Failure of this type of bearing usually takes the form of fatigue cracks on the surfaces of the races and rolling parts, leading to spalling or peeling; destruction of the bearing follows relatively quickly. Vibration detection may be applicable, although regular audio and visual inspection forestalls serious conditions.

Copyright © 2000 IEEE. All rights reserved.
Copyright The Institute of Electrical and Electronics Engineers, Inc.
Provided by IHS under license with IEEE
No reproduction or networking permitted without license from IHS
Not for Resale

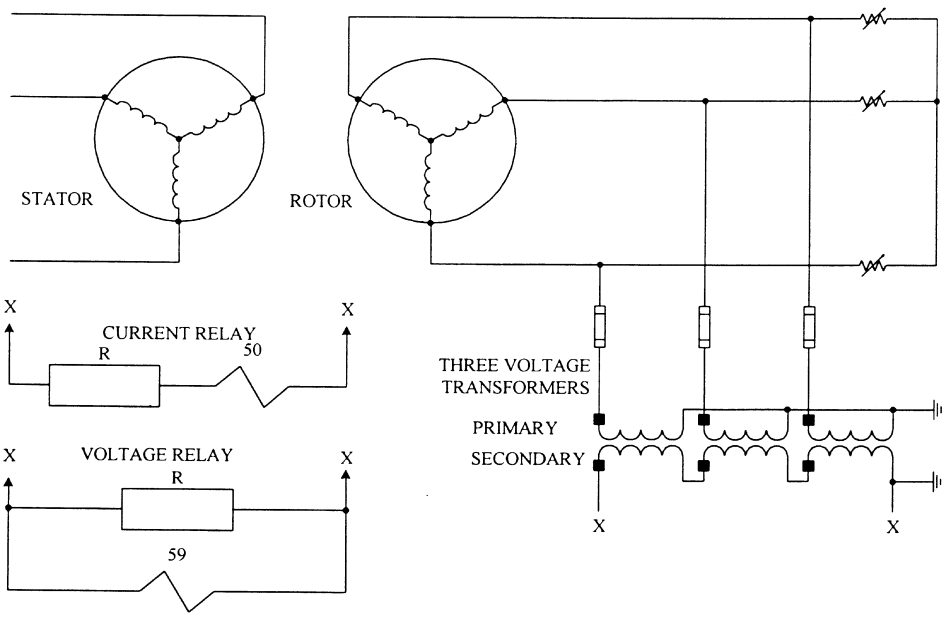

Figure 20—Wound-rotor motor rotor ground protection

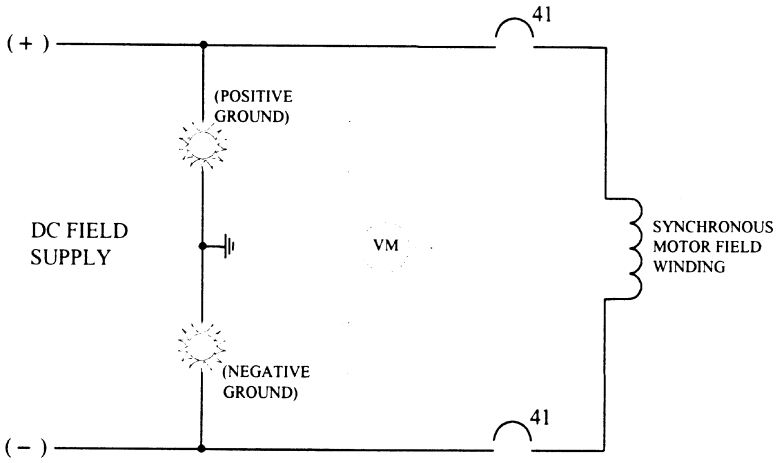

Figure 21—Ground-detection lamps

Temperature sensing similar to that described in 5.2.9.1 can also be applied to bearings to protect against catastrophic damage, even though the bearing itself may not be protected. Overheating may be caused by overlubrication or underlubrication and overloading; however, thermal protection is not practical due to the difficulty installing heat-sensing devices in the proper location.

Copyright © 2000 IEEE. All rights reserved.

Copyright The Institute of Electrical and Electronics Engineers, Inc.
Provided by IHS under license with IEEE
No reproduction or networking permitted without license from IHS
Not for Resale

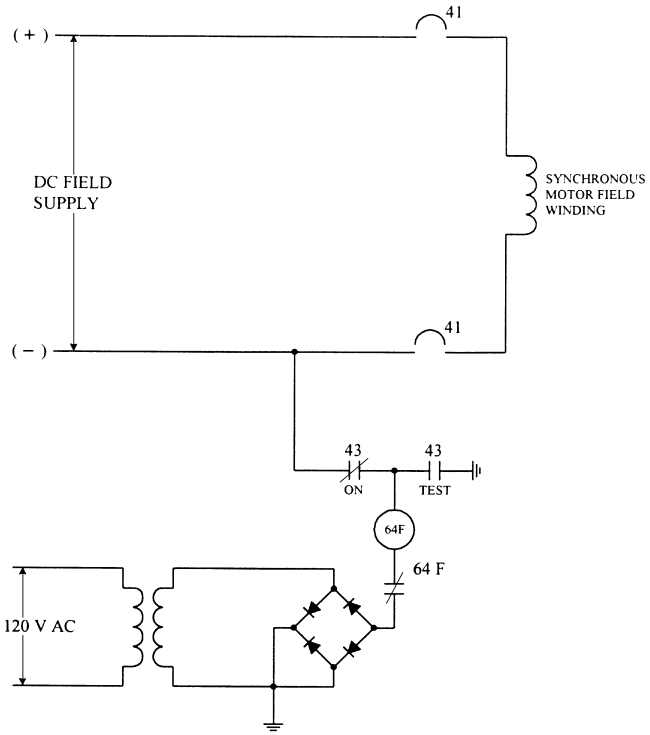

Figure 22—AC ground detection

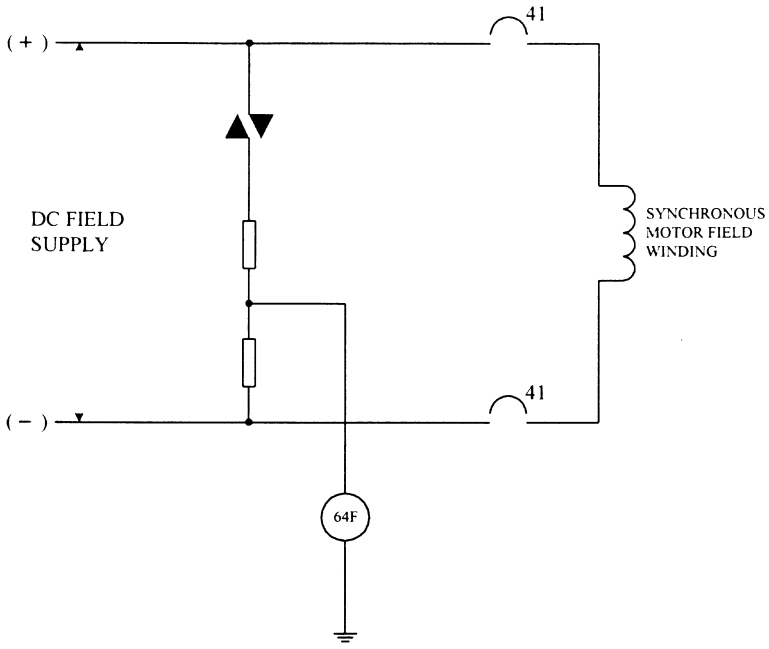

Figure 23—DC ground detection

Copyright © 2000 IEEE. All rights reserved.
Copyright The Institute of Electrical and Electronics Engineers, Inc.
Provided by IHS under license with IEEE
No reproduction or networking permitted without license from IHS
Not for Resale

5.6.3 Fluid-film (sleeve) bearings

Sleeve bearings transmit the rotor weight to the bearing supports (frame or pedestal) through a thin film of lubricant that reduces the coefficient of friction. The shaft diameter is smaller than the inside of the bearing, so that the shaft tends to lie eccentric. Lubricant is supplied at the point of greatest clearance, and is literally pumped into the wedge-shaped space between the shaft and bearing by the rotation of the shaft, thereby establishing a hydrodynamic pressure that supports the shaft. When the film of lubricant is destroyed, friction losses rise rapidly, and metal-to-metal contact is likely to occur. Conditions leading to film failure are reduced lubricant viscosity, falling speed, increased loading, or particles in the lubricant larger than the minimum film thickness. Since an increase in temperature reduces viscosity, these conditions tend to be cumulative, and bearing failure is accelerated. The rate of temperature rise depends on the severity of the fault condition and the thermal capacity of the bearing.

5.6.4 Bearing failure

Bearing failure may be due to one or more of the causes listed in 5.6.4.1 and 5.6.4.2.

5.6.4.1 Lubricant problems

a) Incorrect grade or viscosity of lubricant
b) Inadequate cooling of bearing or lubricant, or both
c) Deterioration, saponification, or frothing of oil
d) Abrasive particles in lubrication system
e) Lack of proper amount of lubricant

5.6.4.2 Mechanical problems

a) Failure of oil supply due to
    1) Stuck oil rings
    2) Lubricant pump failure
    3) Low lubricant reservoir level
    4) Fractured oil pipe
b) Excessive radial loading due to
    1) Misalignment of shaft and bearings of motor
    2) Misalignment of coupling between motor and load
    3) Improper fit of bearing
    4) Bent motor shaft
    5) Unbalanced rotor
    6) Tight belt or chain drive
c) Excessive axial or thrust loading due to
    1) Improper leveling
    2) Improper axial alignment with respect to magnetic center
    3) Improper axial alignment of driven equipment reflected through double helical gear drive
d) Rough bearing surfaces due to
    1) Fatigue cracks
    2) Abrasive particles
    3) Shaft currents

Copyright © 2000 IEEE. All rights reserved.

Copyright The Institute of Electrical and Electronics Engineers, Inc.
Provided by IHS under license with IEEE
No reproduction or networking permitted without license from IHS
Not for Resale

e) Loose bolts in the bearing cap

f) Phase current unbalance and harmonics causing

1) Vibration
2) Heating of rotor structure

5.6.5 Protection

To minimize damage caused by bearing failure, protective devices should be used to sound an alarm or de-energize the motor. Bearing protective devices responsive to one or more of the following conditions may be included:

a) Low oil level in reservoir: (71) level switch
b) Low oil pressure: (63) pressure switch
c) Reduced oil flow: (80) flow switch
d) High temperature: (38) thermocouples or RTD
e) Rate of temperature rise: (38)
f) Vibration (used on motors with antifriction bearings in place of thermal devices)

The low-oil-level, low-pressure, and reduced-oil flow devices should indicate the extent of the reduction in level, pressure, or flow by sounding an alarm for relatively minor reductions and causing motor shutdown for large reductions. Prelubricating and postlubricating periods may be employed in the start sequence of larger motors, with a monitoring timer used to check that satisfactory lubricating conditions have been established before starting the motor. High-bearing-temperature protection is the most difficult to apply effectively. A tip-sensitive, temperature-responsive device, either in the bearing babbitt or in the lubricating oil flowing from the bearing, is generally utilized. Large motor bearings are usually monitored by either a RTD or thermocouple device, used in conjunction with a complete multiunit monitoring system, for automatic high-temperature detection and direct reading of all bearing temperatures.

The choice of alarm vs. trip function as the response to temperature rise depends on the availability of personnel attending the motor and the service requirement. The rate of temperature rise of bearings indicates the extent and type of bearing malfunction. A slow rise in temperature indicates a less serious malfunction than a fast rise. When a high-temperature rise is slow, sounding an alarm only may be satisfactory. When a high-temperature rise is rapid, the motor should be shut down immediately. One type of device provides an alarm at a lower temperature, followed by a shutdown of the motor at a higher temperature. An alarm or shutdown based on a rate-of-temperature-rise device is the best protection for the high-temperature conditions.

A word of caution: the bearing may be destroyed before the high-temperature relays can operate to shut down the motor. However, operation of the protective device may save the journal, and prevent the rotor from rubbing on the stator laminations.

Vibration detectors that react to displacement, acceleration, or impulse, if used, should be mounted with the sensitive axis to coincide with the direction of displacement. Such devices are usually deactivated during startup or shutdown.

In many applications, the motor shaft, through its coupling to a pump or a fan, may experience a buildup of static charge. Without an effective grounding of the shaft to dissipate that charge, shaft voltages could reach levels where arcing could occur through the thin oil film of the bearings. Pitting of the bearing surfaces and ultimate bearing failure will result. To protect against this damaging buildup of charge, shafts are usually grounded using carbon brushes or copper braids.

Copyright © 2000 IEEE. All rights reserved.
Copyright The Institute of Electrical and Electronics Engineers, Inc.
Provided by IHS under license with IEEE
No reproduction or networking permitted without license from IHS
Not for Resale

5.7 Abnormal power supply conditions

5.7.1 General discussion

Motors are designed to successfully operate when subjected to slight variations in power supply voltage and frequency, as defined in 5.2.6 and further defined in ANSI and NEMA induction and synchronous motor standards (see NEMA MG1-1998). However, any variation in voltage or frequency will result in a change in motor performance (i.e., torque, speed, operating temperature, efficiency, and power factor).

5.7.1.1 Effects on motor performance due to variations in the motor power supply

In general, the following changes in motor performance will occur due to variations in the motor power supply:

a) Torque will vary as the square of the applied voltage.
b) Speed will vary directly with frequency and increase slightly with a voltage increase.
c) Operating temperature rise will vary as the square of the motor current.
d) Efficiency is directly related to motor losses; any increase in motor current will result in a decrease in efficiency.
e) Power factor is directly related to motor magnetization (no-load) current; an increase in magnetization current results in a decrease in motor power factor.
f) Most motors can be considered constant kVA devices; i.e., as voltage decreases, current increases proportionately.
g) Protective devices may need to be adjusted

Although each of these performance characteristics may affect the process of which the motor is a part, only operating temperature is of primary concern with respect to motor protection. Operating temperatures will determine the life of the motor insulation. Each occurrence of increased temperature will effectively reduce the life of the motor. It is, therefore, desirable to detect these conditions as soon as possible to limit the loss of motor life.

5.7.1.2 Categories of current that directly affect motor operating temperature

There are seven categories of current that directly affect motor operating temperatures:

a) Starting (locked rotor) current
b) Magnetization (no load) current
c) Load current
d) Conductor eddy currents
e) Stray loss currents
f) Negative-sequence currents (current unbalance) flowing in rotor bars, rotor wedges, or damper windings
g) Nonlinear loads

The magnitude of each of these currents can be affected by abnormal voltages and/or abnormal frequency.

5.7.2 Abnormal voltage

Operating voltages that deviate from rated voltages more than the tolerance given in NEMA MG-1-1993 may subject the motors to hazards for which special forms of protection may be required (see 5.2.6). In the present context, abnormal voltage encompasses the following:

Copyright © 2000 IEEE. All rights reserved.

Copyright The Institute of Electrical and Electronics Engineers, Inc.
Provided by IHS under license with IEEE
No reproduction or networking permitted without license from IHS
Not for Resale

a) Undervoltage
b) Overvoltage
c) Unbalanced voltage and phase failure

5.7.2.1 Undervoltage protection

Undervoltage conditions may last for only a few cycles or continue on a steady-state basis. The effect the undervoltage condition has on any given motor will vary depending on the type of motor, the driven load, and whether the motor is running or being started.

In many instances, motors may be approximated as constant kilovoltampere devices for a given shaft load; therefore, current variations follow voltage variations inversely. Balanced three-phase undervoltage is accompanied by balanced three-phase overcurrent. The overcurrent protection described in 5.2 and 5.3 may provide satisfactory motor protection for excessive steady-state undervoltages. That being the case, when a long-term undervoltage condition occurs, the overcurrent devices operate to protect the motor. However, some undervoltage conditions may not be adequately protected against and may require special protection.

When determining the requirements for undervoltage protection for large motors, both undervoltage of long-time duration and undervoltage of short-time duration (0–15 cycles) should be considered.

5.7.2.1.1 Undervoltage of long time duration

Large motors are typically specified to start successfully, without damage, with terminal voltages as low as 70% to 85% of rated voltage. Too low a voltage at the terminals of a motor while the motor is being started may prevent it from reaching its rated speed, or cause the acceleration period to be extended, resulting in excessive heating of the rotor and stator windings. In the case of a synchronous motor, the motor may not reach sufficient speed to enable it to pull into synchronism when the field is applied.

A large induction motor rotating at essentially rated speed, or a large synchronous motor with fixed excitation, may be approximated at steady-state conditions as a constant kVA device for a given shaft load. Therefore, low voltage encountered while the motor is running results in higher than normal operating currents, and in the case of induction motors, results in increased heating of the stator winding and rotor. In the case of synchronous motors, low voltage results in higher stator currents with increased heating of the stator, with the possibility of the motor pulling out of synchronism.

In addition, if the dc field supply is obtained by rectifying the ac voltage from the same source as the stator supply, the dc voltage is also low or the field is weaker, tending to make the synchronous motor less stable.

Other issues involving long-term, low-voltage conditions concern the ability of the motor's control equipment to function properly. Motor starters typically have primary side fuses used to protect the control transformer that supplies the starter control circuits. The failure of these fuses during a sustained undervoltage condition has been determined as the cause for motors failing to start. Undervoltage relays set to operate prior to control fuse failure have been installed on buses with critical motor loads.

In summary, some means of undervoltage protection should be used if the overheating caused by a long-duration undervoltage condition is not adequately protected against by other relays or devices.

5.7.2.1.2 Undervoltage of short duration (voltage sags)

Often, voltage sags last for only 5–15 cycles (60 Hz base) and, in most cases, no harm is done to induction motors if they are allowed to stay on the line. If motors are automatically disconnected during these sags, expensive shutdowns can be experienced. In applying protection for such installations, the relaying should be no faster or more sensitive than needed.

Copyright © 2000 IEEE. All rights reserved.
Copyright The Institute of Electrical and Electronics Engineers, Inc.
Provided by IHS under license with IEEE
No reproduction or networking permitted without license from IHS
Not for Resale

In the case of large synchronous motors supplying critical process loads, it is usually desirable to run stability studies, taking into account the total inertia of motor and driven load, the duration of the voltage sag, and the characteristics of the motor. Such a study is most helpful in selecting the protective equipment that will permit holding the motor on the line, and for determining the limiting voltage sag conditions.

Consideration must also be given to the condition in which the supply voltage is removed by a breaker or switch remote from a motor. If the motor cannot tolerate a high-speed reclosure, some provision must be made to trip the local breaker and resynchronize when the supply voltage is normal. Such a condition might involve reclosure of the normal supply, or a transfer from the normal supply to an alternate supply. Safe transfer of a motor to an alternate power supply can be accomplished if such a transfer is performed as described in 5.8.2.

Transfer of a motor to an alternate source, and the subsequent retransfer to the normal source, can be accomplished using power circuit breakers or automatic transfer switches.

5.7.2.1.3 Other undervoltage protection considerations

The action of the undervoltage device depends on the service that the protected motor is providing. Some motors are classified as essential, and should not be removed from service by relays that do not protect the system from the effect of a fault on the motor or its associated circuit. Quite often, the undervoltage condition is caused by some abnormality in the power supply system that requires the continued operation of the motor so the system may recover, even though the motor may be forced to operate at an overtemperature or at reduced capability.

Power plant station service is an area where this condition may exist. During a system disturbance that reduces voltage, the system may separate and completely collapse upon additional loss of generation capacity, which can occur if the motors drop out on undervoltage. The successful recovery of the system depends on maintaining each unit at maximum possible capability. In this case, the fans, pumps, etc., that serve the unit must remain in operation, even though the voltage is reduced below a normally designated safe value. Recovery can then be accomplished by suitable operator action.

When a motor is not considered essential, the undervoltage device may be connected to trip the appropriate contactor or circuit breaker where tripping is allowed. A time delay should be included to allow faults or system disturbances to clear before tripping the breaker. The time delay depends on, and should be coordinated with, the time to clear or isolate system faults by backup relay operations.

The type of undervoltage device used depends on the type of motor control. Medium-voltage power circuit breakers require an undervoltage relay and potential transformer for the sensing and tripping signals. These are applied on circuits with voltages of 2.4–13.8 kV.

Low-voltage air circuit breakers up to 600 V can be equipped with time-delay undervoltage tripping attachments if used alone.

In switchgear assemblies, an undervoltage relay and a shunt trip device with dc or capacitor trip can be provided to protect for undervoltage.

Motor contactors do not provide adequate undervoltage protection because of the low value of voltage at which dropout occurs. A more complete discussion of the effect of the motor controller is included in 4.3.

5.7.2.2 Overvoltage protection

Operation of induction and synchronous motors on moderate steady-state overvoltage within the tolerance of motor standards is not generally considered injurious. Overvoltage causes an increase in magnetization (no load) current due to an increase in iron losses in the machine. At a given shaft load, the overvoltage also

Copyright © 2000 IEEE. All rights reserved.

Copyright The Institute of Electrical and Electronics Engineers, Inc.
Provided by IHS under license with IEEE
No reproduction or networking permitted without license from IHS
Not for Resale

causes a decrease in load current. Since the magnetization current is a small percentage (typically 20% to 30%) of the total current in large motors, the resulting total current will be less than the motor current at rated voltage. Therefore, higher stator winding temperatures at higher operating voltages are unlikely. (Note that core temperatures will usually be higher.) This is not the case for smaller motors, because the magnetization current is a much larger percentage of the total motor current. However, if motor load current were to remain constant, and the motor magnetization current increased due to the overvoltage, then motor operating temperatures would increase. Therefore, overcurrent devices with their distinct current pickup level permit a higher winding temperature to occur on overvoltage than at rated voltage. Only a device that senses winding temperature can adequately protect against such an abnormal operating condition.

A motor is essentially a constant impedance device during the initial starting period. Therefore, when starting with overvoltage, the locked-rotor current is higher than the rated starting current in somewhat greater than direct proportion to the increase in voltage. The locked-rotor relay protects the motor against thermal damage when the voltage is not more than 10% above rated voltage at the time of start.

Transient overvoltages can also be extremely dangerous to motors. Motor protection for such conditions can be accomplished only by the use of surge capacitors and/or arresters (see 5.9).

5.7.2.3 Unbalance protection and phase failure

Unbalanced voltage and phase failures are similar phenomena, differing only in the degree of unbalance. While unbalanced phase voltages or currents are readily identified, it is the negative-sequence component that actually jeopardizes the motor (Wagner [B132]). Hence, simple unbalance measurements may not provide the degree of motor protection required.

When the voltages supplied to an operating motor become unbalanced, the positive-sequence current remains substantially unchanged, and a negative-sequence current flows due to the unbalance. If, for example, the nature of the unbalance is an open circuit in any phase, a negative-sequence current flows that is equal and opposite to the previous load current in that phase. The combination of positive- and negative-sequence currents produces phase currents of approximately 1.7 times the previous load in each sound phase, and zero current in the open phase. This is illustrated in Figure 24, Figure 25, and Figure 26. Because of additional motor losses, the actual value of the motor phase current in each sound phase is closer to twice the previous load current.

Three-phase voltages will still be observed at the motor terminals with one supply phase open. The actual magnitudes depend on the motor shaft load and on whether any other loads or capacitors are connected in parallel.

When a synchronous motor is running at rated load, and then one supply phase is lost, the motor will probably pull out-of-step and must be removed from service. However, if the motor is lightly loaded and continues running synchronously, there will be extra losses as a result of the asymmetry in line current, and destruction of the damper winding may result. When an induction motor loses one phase, its slip increases; however, it usually does not stall unless the resulting single-phase supply voltage is below normal, or the shaft load is more than 80% of full load. The losses increase significantly when loaded near or above its rating. With either type of motor, single phasing is a hazardous condition, and steps should be taken (preferably by relay action) to de-energize the motor.

Copyright © 2000 IEEE. All rights reserved.
Copyright The Institute of Electrical and Electronics Engineers, Inc.
Provided by IHS under license with IEEE
No reproduction or networking permitted without license from IHS
Not for Resale

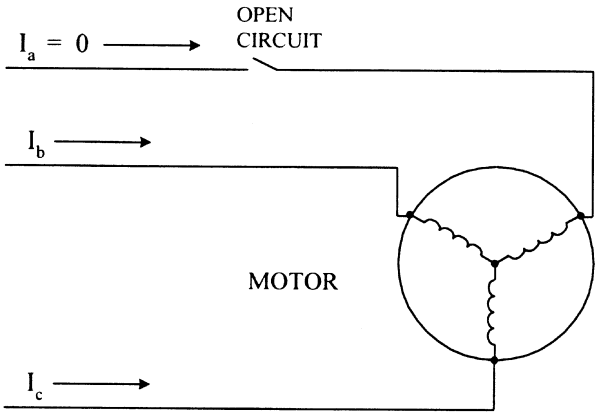

Figure 24—Current in motor windings with one phase open circuited: wye-connected motor

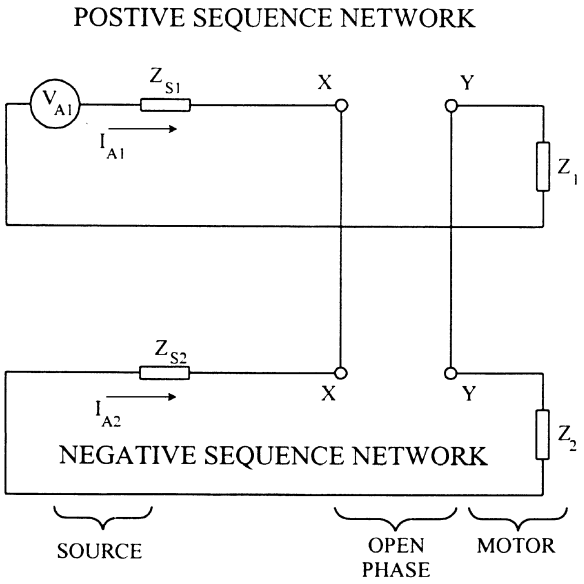

Figure 25—Connection of sequence networks for open-phase condition

A small-voltage unbalance produces a large negative-sequence current flow in either a synchronous or induction motor. The per unit (pu) negative-sequence impedance of either is approximately equal to the reciprocal of the rated voltage pu locked-rotor current. When, for example, a motor has a locked-rotor current of six times rated, it has a negative-sequence impedance of approximately 0.167 pu on the motor-rated input kilovoltampere base. When voltages having 0.05 pu negative-sequence component are applied to the motor, negative-sequence currents of 0.30 pu flow in the windings. Thus, a 5% voltage unbalance produces a stator negative-sequence current of 30% of full-load current. The severity of this condition is indicated by the fact that with this extra current, the motor may experience a 40% to 50% increase in temperature rise.

Copyright © 2000 IEEE. All rights reserved.

Copyright The Institute of Electrical and Electronics Engineers, Inc.
Provided by IHS under license with IEEE
No reproduction or networking permitted without license from IHS
Not for Resale

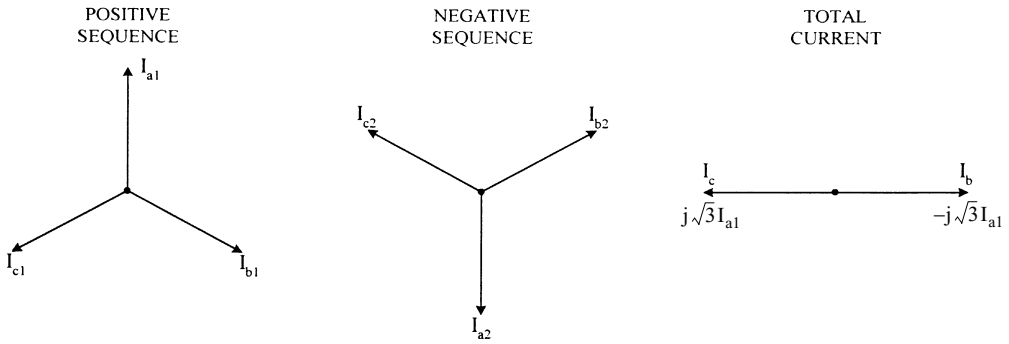

$I_a = I_{a0} + I_{a1} + I_{a2} = 0$ OPEN CIRCUIT IN "A" PHASE
$I_b = I_{a0} + a^2I_{a1} + aI_{a2} = -j\sqrt{3}I_{a1}$
$I_c = I_{a0} + aI_{a1} + a^2I_{a2} = +j\sqrt{3}I_{a1}$

Figure 26—Sequence currents for open-phase supply to motor

The increase in loss is largely in the rotor. Negative-sequence phase currents produce a flux that rotates in a direction opposite to the rotor rotation. This flux cuts the rotor bars at a very high speed and generates a pronounced voltage, resulting in a large rotor current. In addition, the 120 Hz nature of the induced current produces a marked skin effect in the rotor bars, greatly increasing rotor resistance. Rotor heating is substantial for minor voltage unbalance. Excessive heating may occur with phase current less than the rated current of the motor.

When a three-phase induction or synchronous motor is energized and one supply phase is open, the motor will not start. Under these conditions, it overheats rapidly and is destroyed unless corrective action is taken to de-energize it. The heating under these circumstances is similar to that in a three-phase failure to start, except that the line current is slightly lower (approximately 0.9 times the normal three-phase, locked-rotor current).

Unbalance protection must sense damaging conditions without responding to conditions for which the protective equipment is not intended to operate. Several classes of relays are used to provide unbalance protection.

Phase-balance relays (46) compare the relative magnitudes of the phase currents. When the magnitudes differ by a given amount, the relay operates. When an open circuit occurs on the load or source side of the CT supplying the relay, sufficient unbalance should exist to make it operate.

Phase-balance relays are available with 1.0 A sensitivity and operate if one phase of the supply to the motor opens with the load on the motor if prior to the open the load current is in excess of approximately 0.6 A in the relay. Caution must be exercised in CT selection to ascertain with older phase-balance relays that the thermal capability of the relay is not exceeded at maximum load. Phase-balance relays without additional time delay beyond what the available relays inherently provide may cause unnecessary tripping of large motors during phase-to-ground or phase-to-phase disturbances remotely located on the power system. Inasmuch as the clearing time of the relays on a power system are generally short in comparison to the required clearing time of phase-balance relays on the motor, a timing relay can be used without degrading the protection of the motor. Relay coordination is usually easier to attain with inverse-time relay characteristics than with separate fixed-time delays. Negative-sequence current relays (46) respond to the negative-sequence component of the phase currents. The instantaneous version of this relay provides excellent sensitivity.

Copyright © 2000 IEEE. All rights reserved.
Copyright The Institute of Electrical and Electronics Engineers, Inc.
Provided by IHS under license with IEEE
No reproduction or networking permitted without license from IHS
Not for Resale

Because of this, it will operate undesirably on the motor contribution to unbalanced faults on the supply system and, therefore, must trip through a timer or be directionally supervised.

The application of phase-balance and negative-sequence overcurrent relays [and neutral overcurrent relays (51N)] should consider CT characteristics under high-current conditions. Excessive CT burdens result in current transformers saturating during fault conditions. Heavy motor-starting currents can also cause CT saturation, especially when the starting current has a large asymmetrical dc component. This dc resulting from motor inrush may last for a significant period of time, compared to an asymmetrical fault-current condition. This is because of the much greater inductance/resistance L/R of the total circuit when starting a motor.

Phase CT saturation usually is not the same between phases and results in false negative- or zero-sequence currents. Hence, this needs to be considered when applying these types of relays. Unequal saturation is also encouraged by unequal burdens on the three-current transformers. Phase unbalance relays usually have considerable variation in the burden between the three phases, and any unsymmetrical conditions, such as single-phase ammeters and ammeter selector switches, can cause relay misoperation due to unequal saturation.

CT saturation is minimized by keeping burdens low (especially the dc resistive component), by using high-ratio current transformers, and by selecting current transformers with a high knee-point (saturation) voltage. Even these may be insufficient for the sustained dc in some motor inrush currents. In such cases, desensitizing the relay with respect to current, or increasing operating time, or both, may be necessary.

Negative-sequence voltage or reverse-phase relays respond to single phasing, to unbalanced voltage, or to reversed phase sequence. For motor protection, these relays must sense the same voltage supplying the motor. They are particularly applicable to a bus with substantial static load along with the motor load. For an all-motor load, the negative-sequence voltage relay may not, depending on the motor characteristics, operate for single-phasing at light load. Where motors constitute only a small proportion of the total load, single-phasing of the total load is recognized by this relay, even with no shaft load irrespective of motor characteristics. In general, only the motor loads should be tripped when source single-phasing or excessive unbalance is recognized.

5.7.3 Abnormal frequency

Motor speed varies directly with the applied frequency. Motors are generally designed for constant volts per hertz operation. Frequency in excess of the rated frequency but not in excess of 5% over the rated frequency without a corresponding voltage rise, is not considered a hazardous condition for synchronous or induction motors, provided the driven equipment does not overload the motors at the higher frequency.

At decreased frequency without a corresponding voltage reduction, the flux density within the motor core is increased, thus increasing the hysteresis and eddy-current losses and heating. Sustained operation at reduced frequency and rated or overvoltage is not permissible if the effect of the voltage and frequency exceeds the standard tolerances (see 5.2.6). Protection against this type of operation is usually allocated to the thermal protective equipment; however, more refined protection is possible using a frequency-sensitive relay or a volts per Hertz relay, which measures the actual abnormality.

5.8 Abnormal operating conditions

5.8.1 Incomplete-starting-sequence protection

An incomplete-sequence relay (48) is a relay that returns the equipment to the normal or off position and locks it out if the normal starting, operating, or stopping sequence is not properly completed within a predetermined time. Incomplete starting-sequence protection can be provided by an adjustable definite-time relay or function furnished on electrically operated reduced-voltage, and some full-voltage, motor starters to protect the machine and starting reactor, autotransformer, or resistance against prolonged operation at

Copyright © 2000 IEEE. All rights reserved.

Copyright The Institute of Electrical and Electronics Engineers, Inc.
Provided by IHS under license with IEEE
No reproduction or networking permitted without license from IHS
Not for Resale

subnormal speed. The stator overload relays do not provide such protection. This is generally supplied in microprocessor-based protection systems.

5.8.2 Out-of-phase re-energizing protection

Induction motors designed for across-the-line starting have the ability to withstand the mechanical forces developed by normal currents during starting at rated voltage. Abnormally high inrush currents can be produced in a motor when it is re-energized soon after a power interruption, and the possibility of damage should be assessed.

Inrush currents under such conditions can be as much as 2.5 times the magnitude of the normal locked-rotor currents for which the motor is designed, depending on the degree of saturation of the motor magnetic paths, the system impedance, and the resulting voltage and angle at the instant of re-energizing.

The currents and torques are a function of the number, size, and type of motors and loads and the elapsed time before the motors are re-energized.

Out-of-phase re-energizing resulting from transfer of a motor to an alternate source can be avoided by one of five methods: fast transfer, parallel transfer, residual voltage transfer, slow transfer, and in-phase transfer. A fast transfer is designed to prevent paralleling by minimizing the time that the normal and alternate sources are both open (usually less than 10 cycles). Parallel transfer schemes are designed to have both the normal and alternate circuit breakers closed at the same time during the transfer. Residual voltage transfer schemes are designed to monitor the magnitude of the motor bus voltage after the source has been lost, and prevent transfer to the alternate source until the motor bus voltage drops below a predetermined voltage limit. This process typically takes more than 10 cycles to complete. Slow transfer schemes are designed to wait for a predetermined time, usually greater than 20 cycles, after a bus power source is removed before connecting the bus to an alternate source. Voltage relays do not supervise this transfer. An in-phase transfer scheme is designed to monitor the relative phase angle of the bus residual voltage with respect to the source voltage and connect the bus to the new source when the angle is near zero.

5.8.2.1 Synchronous motors

Transfer of synchronous motors requires considering the stability characteristics of the motor with the connected power system. Synchronous motors may not be rated for across-the-line starting (i.e., reduced voltage starting) and may require special control actions prior to restart. In most cases, transfer of synchronous motors to an alternative source can be safely accomplished using fast transfer, parallel transfer, residual voltage transfer, and slow transfer, as described above. In-phase transfer is typically not possible due to stability problems. However, a detailed analysis of the motor stability after the transfer, as well as consultation with the motor manufacturer, is suggested.

5.8.2.2 Reclosing from a single source

The choice to re-energize a motor after an interruption should be considered only after careful investigation (see 5.7.2.1.2 and NEMA MG-1-1993). Transient studies should be performed to determine if the motor breaker must be tripped, or if the motor can be re-energized with the new source.

The time for reclosing a single feeder, which may result in an out-of-phase re-energizing, can vary widely depending on the types of relays and breakers used and the reclosing scheme. Protection for this type of out-of-phase re-energizing of a motor bus can be provided by some of the same techniques as used for the motor bus transfer schemes. The first method is to delay re-closing for a preset time to allow adequate decay of the motor internal voltage. The second scheme is to apply dead bus reclosing, which is commonly set to reclose below 25% of rated voltage. A high-speed underfrequency relay to detect the supply outage and trip the motor before re-energizing can be used. The underfrequency relay may not be able to sense the loss of source power for applications where the frequency does not decrease with loss of power. The second

Copyright © 2000 IEEE. All rights reserved.
Copyright The Institute of Electrical and Electronics Engineers, Inc.
Provided by IHS under license with IEEE
No reproduction or networking permitted without license from IHS
Not for Resale

problem with underfrequency protection is that for source line faults, there may not be sufficient voltage to permit the underfrequency relays to operate. A combination of a voltage relay and an underfrequency relay can provide protection for this condition. The third scheme uses a sensitive high-speed, three-phase, loss-of-power relay to detect loss of source. This scheme requires the relay to be blocked at startup until a sufficient load level is reached.

Reverse power relays can be used in some specific cases for protection against out-of-phase re-energizing from reclosing, but the following problems should be noted:

a) For high impedance faults, power may still flow into the motor, preventing motor tripping.
b) Reverse power relays sensitive to reactive power instead of real power usually do not provide proper tripping for loss of source protection.

5.9 Surge protection

IEEE Std C62.2-1987, IEEE Std C62.22-1991, and IEEE Std 522-1992 should be referred to for guidance on surge protection for motors. In addition, B.8 (in Annex B, Bibliography) provides references to several papers that give considerable insight into these issues.

5.10 Motors or motor controls used in class 1E nuclear exposure

Since this guide does not cover motors used in Class 1E nuclear exposure, reference should be made to the appropriate IEEE guides, ANSI guides, and Nuclear Regulatory Commission rules when applying motors and their controls to Class 1E applications in nuclear plants.

6. Motor protection specifications

6.1 General considerations

The complete protection scheme must be chosen to achieve optimum service reliability, safety, and protection of equipment at a reasonable cost. It is essential that the operating characteristics of the chosen motor protection system be coordinated with those of the supply and, if necessary, the process or load involved if selective operation of the protective and control devices is to be achieved.

In large motor installations, it may be necessary to consult the motor manufacturer to establish clearly such requirements as service factor, duty cycle, frequency of starts, WK2 of rotating parts, starting torque, current, acceleration time, cooling, bearing lubrication supply, mechanical stress and vibration limits, rotor and stator heating rates, thermal limits, and the effects of surge protectors and power-factor-correction capacitors, if used. If the application uses adjustable-speed drives, coordination between the motor and drive system protection should be provided.

In the event of motor failure, subsequent repair and reinstallation of the existing motor protection should be reviewed in light of any shop modifications (inferior or superior) to the design of the machine. Such modifications may affect heating and winding insulation characteristics and may include added protection devices such as RTDs. When considering replacement of older design machines with ones of newer design, closer manufacturing tolerances due to tighter design margins resulting from computer-aided motor design may require review of existing protection schemes.

Copyright © 2000 IEEE. All rights reserved.

Copyright The Institute of Electrical and Electronics Engineers, Inc.
Provided by IHS under license with IEEE
No reproduction or networking permitted without license from IHS
Not for Resale

Selection of the specific protection schemes should be based on the following factors:

a) Motor horsepower rating and type
b) Supply characteristics, such as voltage, phases, method of grounding, and available short-circuit current
c) Type of motor controller employed
d) Operating characteristics and settings of protective devices between the motor starter and source supply
e) Protective devices monitoring the driven machinery or load process, such as vibration, torque, and other mechanical limits
f) Function and nature of the process that determines the importance of the drive
g) Environment of motor, associated switching device, and protective devices
h) Cost of protection scheme relative to that of the associated equipment
i) Hot and cold permissible locked-rotor time and permissible accelerating time
j) Time vs. current curve during starting
k) Frequency of starting

6.2 Motor protection tables

The purpose of this subclause is to summarize the devices available for the protection of induction and synchronous motors employed in general applications. The motor-starting equipment and associated protective devices illustrated are not to be regarded as a design specification or standard, but rather as a guide for the selection of adequate protection for any general induction or synchronous motor application.

Alternative protective devices are tabulated, the use of which may be justifiable or preferable depending on the particular application considered and the philosophy of operation. Table 1 through Table 5 and Figure 27 through Figure 33 cover devices used for stator and ancillary protection. Table 6 covers motor field-excitation protection. Table 7 lists selected device designations and functions.

Note that in Table 6 and Table 7, NEMA designation uses the terminology of ANSI/NEMA ICS 2-1988, and the device designations of ANSI/NEMA ICS 1-1990 refer to IEEE Std C37.2-1991. In all of the tables, functions may be implemented in multifunction systems or in discrete relays.

Copyright © 2000 IEEE. All rights reserved.
Copyright The Institute of Electrical and Electronics Engineers, Inc.
Provided by IHS under license with IEEE
No reproduction or networking permitted without license from IHS
Not for Resale

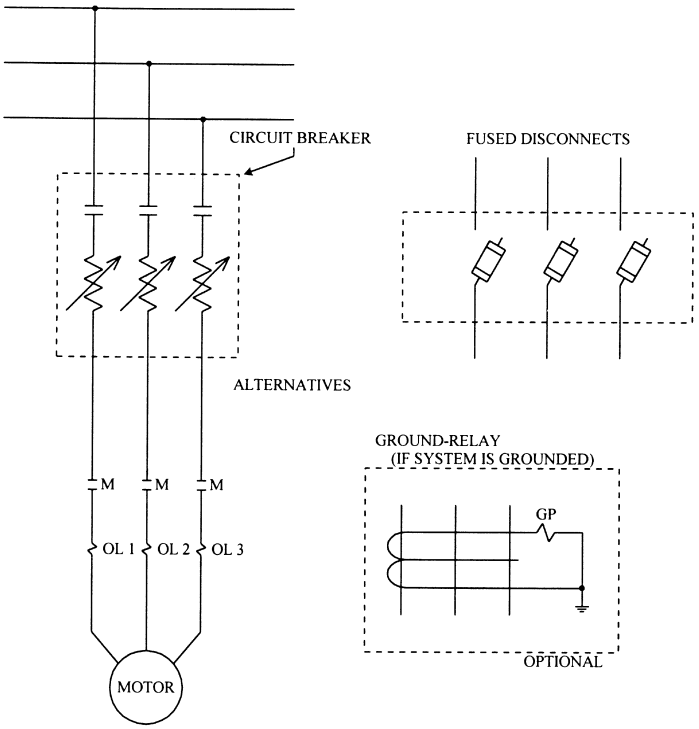

Figure 27—Low-voltage motor controller (refer to Table 1)

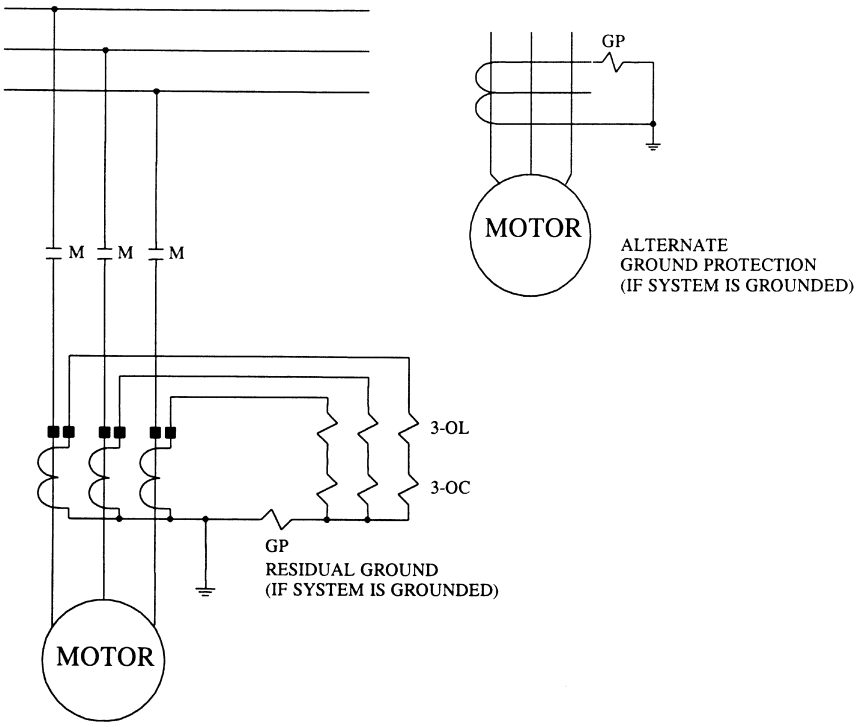

Figure 28—Class E1 medium-coverage motor controller (refer to Table 2)

Copyright © 2000 IEEE. All rights reserved.

Copyright The Institute of Electrical and Electronics Engineers, Inc.
Provided by IHS under license with IEEE
No reproduction or networking permitted without license from IHS
Not for Resale

Table 1—Low-voltage combination starter comprised of either a molded case air circuit breaker or fused disconnect, and a magnetic contactor with an overload relay

Ratings	Range of ratings	
Continuous amperes	9–250	—
Nominal voltage (V)	240–600	—
Horsepower	1.5–1000	—
Starter size (NEMA)	—	00–9
Types of protection	**Quantity**	**NEMA designation**
Overload: overload relay elements	3	OL
Short circuit: circuit breaker current trip elements	3	CB
Fuses	3	FU
Undervoltage: inherent with integral control supply and three-wire control circuit	—	—
Ground fault (when specified): ground relay with toroidal CT	—	—

--`,-`-`,,`,,`,`,,`---

Copyright © 2000 IEEE. All rights reserved.
Copyright The Institute of Electrical and Electronics Engineers, Inc.
Provided by IHS under license with IEEE
No reproduction or networking permitted without license from IHS
Not for Resale

Table 2—Medium-voltage Class E motor controller (refer to Figures 28 and 29)

Ratings	Class E1 (without fuses)	Class E2 (with fuses)
Nominal system voltage	2300–6900	2300–6900
Horsepower	0–8000	0–8000
Symmetrical MVA interrupting capacity at nominal system voltage[a]	25–75	160–570
Types of protective devices	**Quantity**	**NEMA designation**
Overload, or locked rotor, or both:		
Thermal overload relay	3	OL
TOC relay	3	OC
IOC relay plus time delay	3	TR/OC
Short circuit:		
Fuses, Class E2	3	FU
IOC relay, Class E1	3	OC
Ground fault:		
TOC residual relay	1	GP
Overcurrent relay with toroidal CT	1	GP
Phase balance		
Current balance relay (per motor), or	1	BC
Negative-sequence voltage relay (per bus), or both	1	—
Undervoltage:		
Inherent with integral control supply and three-wire control circuit, when voltage falls sufficiently to permit the contractor to open and break the seal-in circuit	—	UV
Temperature:		
Temperature relay, operating from resistance sensor or thermocouple in stator winding	—	OL

[a]ANSI/NEMA ICS 2-1988, 324.

Copyright © 2000 IEEE. All rights reserved.

Copyright The Institute of Electrical and Electronics Engineers, Inc.
Provided by IHS under license with IEEE
No reproduction or networking permitted without license from IHS
Not for Resale

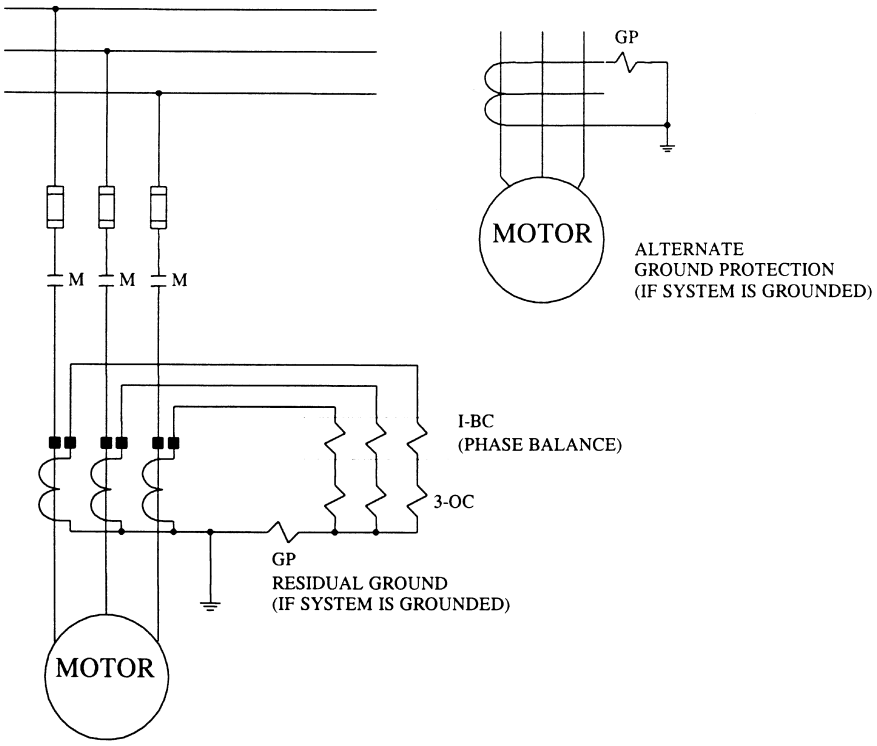

Figure 29—Class E2 medium-voltage motor controller (refer to Table 2)

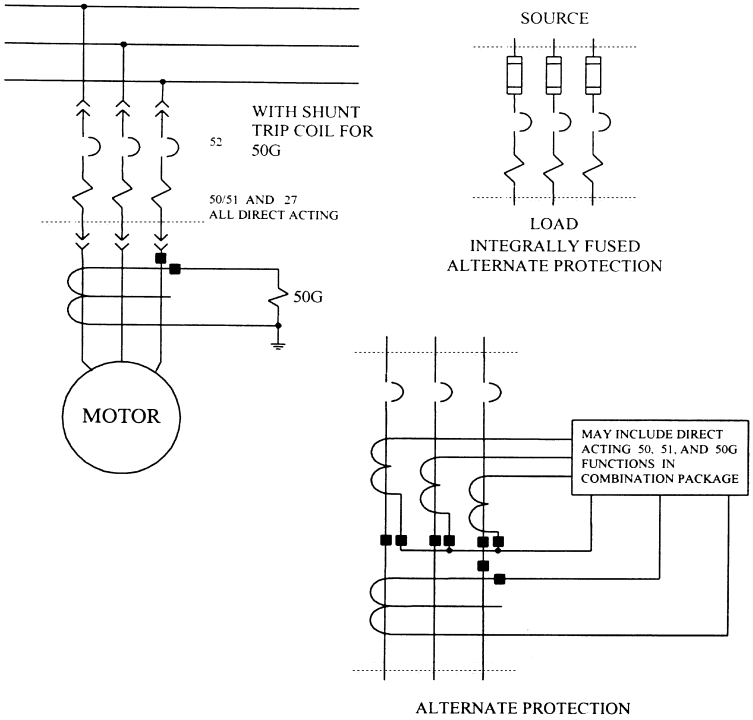

Figure 30—Low-voltage power circuit breaker with series trip device (refer to Table 3)

Copyright © 2000 IEEE. All rights reserved.
Copyright The Institute of Electrical and Electronics Engineers, Inc.
Provided by IHS under license with IEEE
No reproduction or networking permitted without license from IHS
Not for Resale

Table 3—Protection for low-voltage motors, manually or electrically operated, with series trip device (refer to Figure 30)[a]

Type of stator protective device (all direct rating)	Quantity	Standard device function number	NEMA designation
Overload: static trip devices	3	51	—
Short-circuit: Fuses Static trip devices	 3 3	 — 50	 FU —
Undervoltage: time-delay undervoltage relay	1	27	—
Ground fault: overcurrent relay with toroidal CT	1	50 G (or 51 G)	—

[a]See IEEE Std C37.13-1990 for application of integrally fused devices.

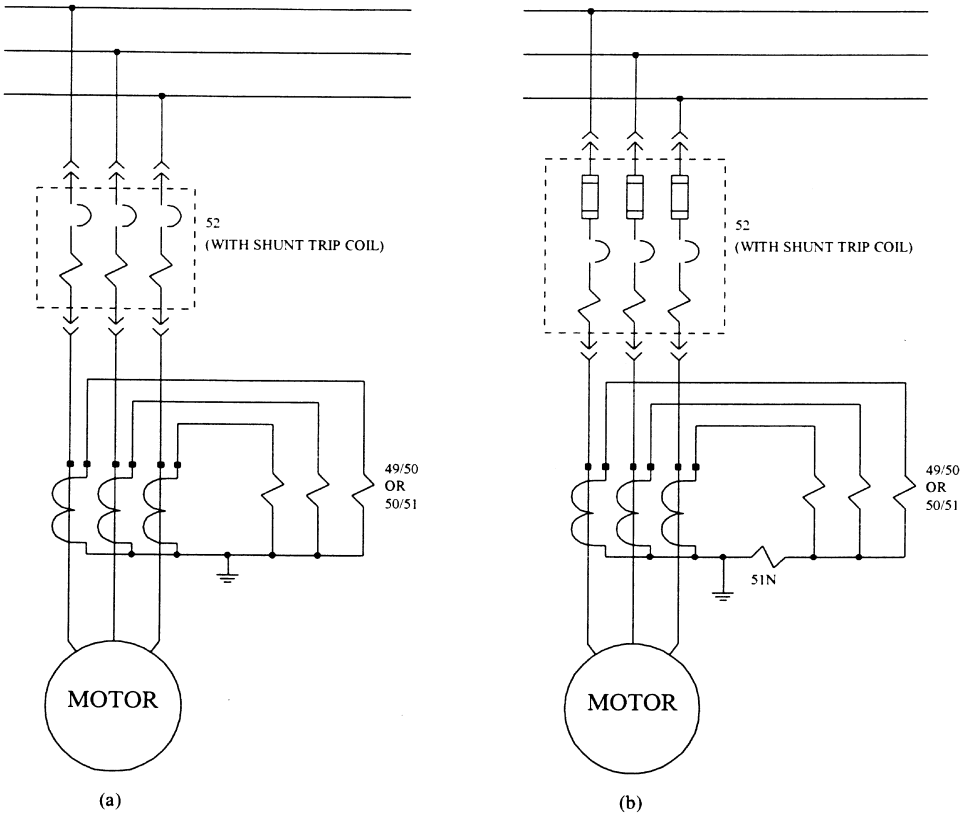

Figure 31—Low-voltage power circuit breaker with protective relays (refer to Table 4)

Copyright © 2000 IEEE. All rights reserved.

Copyright The Institute of Electrical and Electronics Engineers, Inc.
Provided by IHS under license with IEEE
No reproduction or networking permitted without license from IHS
Not for Resale

Table 4—Protection for low-voltage motors with protective relays and electrical tripping in addition to, or in place of, series overcurrent devices (refer to Figure 31)[a]

Type of stator protective device	Quantity	Standard device function number	NEMA designation
Overload			
Static trip devices	3	51	—
Thermal overcurrent relay	3	49	—
TOC relay	3	51	—
Short circuit			
Fuses	3	—	FU
Static trip devices	3	50	—
IOC relay	2 or 3	50	—
Ground fault			
TOC relay, residual connection	1	51N	—
TOC relay with toroidal CT	1	—	GP
Undervoltage: direct-acting, time-delay undervoltage relay	1	27	—

[a]See IEEE Std C37.13-1990 for application of integrally fused devices.
NOTE—Select at least one device under each category for which protection is desired.

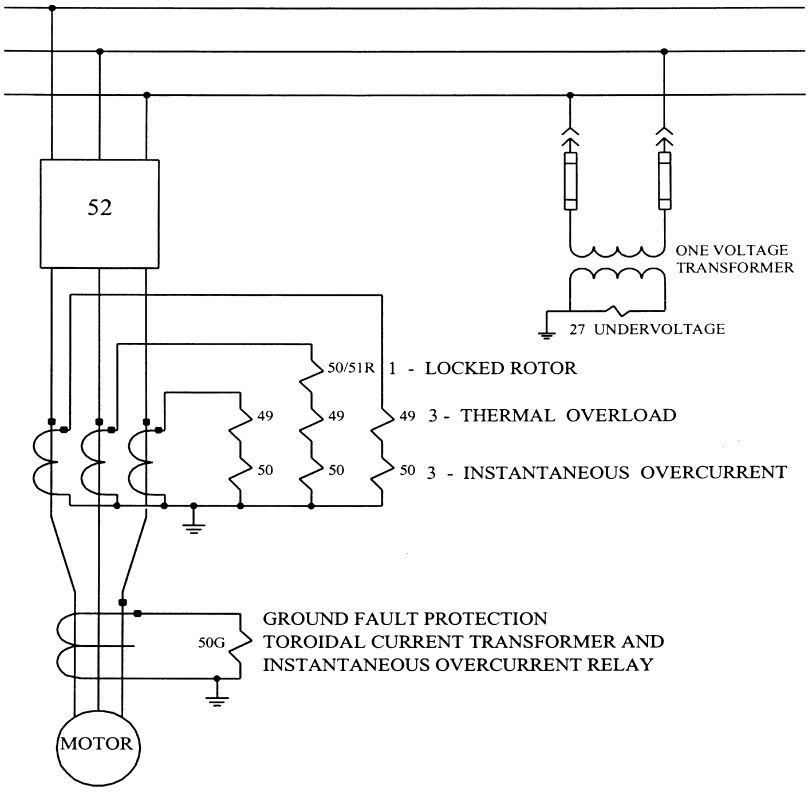

Figure 32—Power circuit breaker motor controller—typical protection (refer to Table 5)

Copyright © 2000 IEEE. All rights reserved.
Copyright The Institute of Electrical and Electronics Engineers, Inc.
Provided by IHS under license with IEEE
No reproduction or networking permitted without license from IHS
Not for Resale

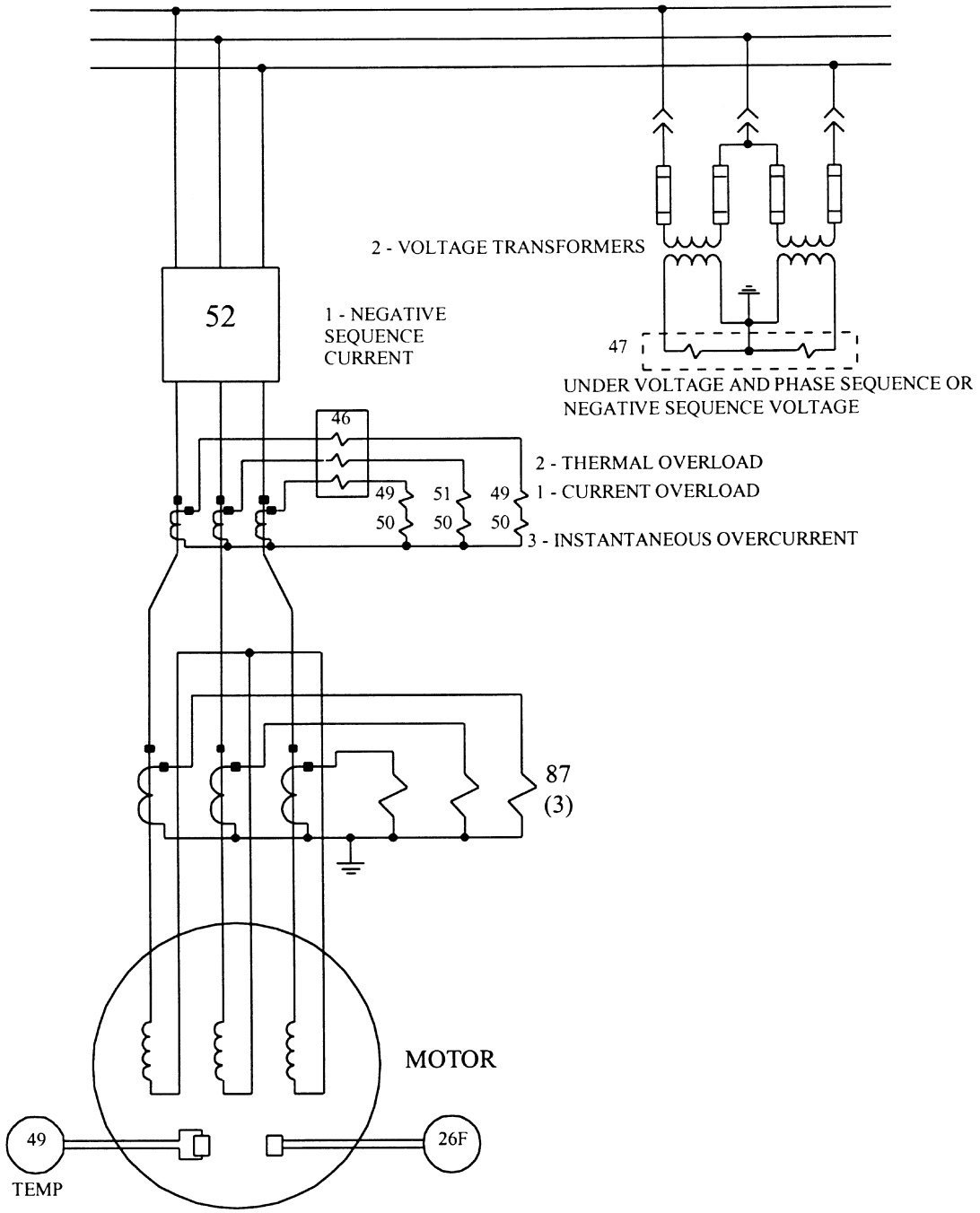

Figure 33—Power circuit breaker motor controller starter—comprehensive protection for large motors (refer to Table 5)

--`,,`-`-`,,`,,`,`,,`---
Copyright © 2000 IEEE. All rights reserved.

Copyright The Institute of Electrical and Electronics Engineers, Inc.
Provided by IHS under license with IEEE
No reproduction or networking permitted without license from IHS
Not for Resale

Table 5—Protection for medium-voltage motors (refer to Figure 32 and Figure 33)

Ratings	Range of ratings	
Continuous amperes	0–3000	
Nominal system voltage	4160–3800	
Symmetrical amperes interrupting capacity at maximum rated voltage	3500–41 000	
Type of relay for stator protection	**Quantity**	**Standard device function number**
Overload:		
Thermal overcurrent relay	2 or 3	49
TOC relay	2 or 3	51
Temperature relay, operated from resistance sensor or thermocouple in stator winding	1	49
Locked rotor:		
Damper winding thermal relay	1	26
TOC relay with instantaneous attachment	1	50/51R
Short circuit:		
TOC relay with instantaneous attachment	2 or 3	50/51
IOC relay	3	50
Percentage differential relay	3	87
Self-balancing primary current, differential relay	3	87
Ground fault:		
TOC residual relay	1	51N
Instantaneous or TOC relay with toroidal CT	1	50G or 51G
Phase balance:		
Current phase-balance relay	1	46
Negative-sequence voltage relay	1	47
Undervoltage:		
Instantaneous undervoltage relay	1	27
Time undervoltage relay	1	27
Undervoltage and phase sequence	1	27/47
Undervoltage supervised by phase sequence relay	1	27/47
Underfrequency relay (where required)	1	81

Copyright © 2000 IEEE. All rights reserved.
Copyright The Institute of Electrical and Electronics Engineers, Inc.
Provided by IHS under license with IEEE
No reproduction or networking permitted without license from IHS
Not for Resale

Table 5—Protection for medium-voltage motors (refer to Figure 32 and Figure 33) *(contin-*

Ratings	Range of ratings	
Ancillary protection:		
Vibration limit relay	1	39
Bearing overtemperature/wear device	1 or 2	38
Ambient temperature control device	1	23
Atmospheric condition monitoring device	1	45
Zero speed/overspeed device	1	12/14

Table 6—Field-excitation protection for all synchronous motor controllers

Function	Standard device function number	NEMA designation
Synchronous speed device	13	—
Field contractor or circuit breaker	41	FC
Field-discharge resistor	—	—
Field application relay	56	—
Power factor relay (out-of-step)	55	PF
Field factor relay	40	FL
Excitation check relay	53	—
Incomplete sequence relay	48	—

Copyright © 2000 IEEE. All rights reserved.

Copyright The Institute of Electrical and Electronics Engineers, Inc.
Provided by IHS under license with IEEE
No reproduction or networking permitted without license from IHS
Not for Resale

Table 7—Device designations and functions

Protective function	Standard device function number	NEMA designation
Time-delay relay	2	TR
Multifunction relay	11	—
Overspeed device	12	—
Synchronous speed check (centrifugal switch), or ac field current	13	FR
Underspeed device	14	—
Impedance relay	21	—
Temperature control device	23	—
Apparatus overheating detection device	26	—
Undervoltage, instantaneous, or inverse time relay	27	UV
Directional power relay	32	—
Bearing protecting device for overtemperature or wear	38	—
Mechanical condition monitor, vibration	39	—
Loss-of-field protection for synchronous motors	40	FL
Field contactor or circuit breaker	41	FC
Atmospheric condition monitor	45	—
Phase-balance current relay	46	—
Phase sequence relay	47	—
Negative-sequence voltage relay	—	—
Incomplete sequence relay	48	—
Thermal relay operated by motor current (replica), winding temperature, or both (also embedded detectors)	49	OL
Overcurrent relay	—	OC
IOC relay	50	—
IOC relay, ground	50G	—
TOC relay	51	—
TOC relay, ground	51G	—

-`-`,-`-`,,`,,`,`,,`---

Copyright © 2000 IEEE. All rights reserved.
Copyright The Institute of Electrical and Electronics Engineers, Inc.
Provided by IHS under license with IEEE
No reproduction or networking permitted without license from IHS
Not for Resale

Table 7—Device designations and functions *(continued)*

Protective function	Standard device function number	NEMA designation
Extreme overload protection for unloaded start of large synchronous motors (usually 1000 hp) set just below pullout torque	51R	—
Residually connected ground TOC relay	51N	—
Circuit breaker	52	CB
Main line contactor	—	M
Excitation check relay for synchronous motors	53	—
Power factor relay	55	—
Field application relay	56	—
Overvoltage relay, instantaneous or time delay	59	OV
Voltage or current balance relay	60	—
Liquid or gas pressure relay or vacuum relay	63	—
Ground-fault detection for current flowing from machine casing or structure to ground	64	—
Ground-fault protective relay	—	GP
Liquid- or gas-level relay	71	—
Phase angle measuring or out-of-step protective relay	78	—
Liquid- or gas-flow relay	80	—
Frequency relay, operated by above or below normal frequency, or rate of change of supply frequency	81	—
Lockout relay, manually or electrically reset	86	—
Differential protective relay, operated by phasor difference between compared electrical quantities	87	—
Differential ground-fault protection, extra-sensitive detection relay	87N	—
Tripping or trip-free relay operates to trip a circuit breaker, contactor, or equipment and prevent immediate reclosure	94	—

--`,,`-`-`,,`,,`,`,,`---
Copyright © 2000 IEEE. All rights reserved.
Copyright The Institute of Electrical and Electronics Engineers, Inc.
Provided by IHS under license with IEEE
No reproduction or networking permitted without license from IHS
Not for Resale

6.3 Adjustable-speed motor protection

The purpose of this subclause is to summarize the protection of multiple and adjustable-speed motors. Figure 34 details the approach of two-speed motor protection. This application uses phase and ground protection applied as described in 5.4. Each speed should be provided with a dedicated set of protective functions. Other protective functions, such as overload and locked rotor, should be applied as required. Multiple-speed motors contain multiple or tapped windings and rely on contactors to accomplish speed change by way of alteration of the winding configurations.

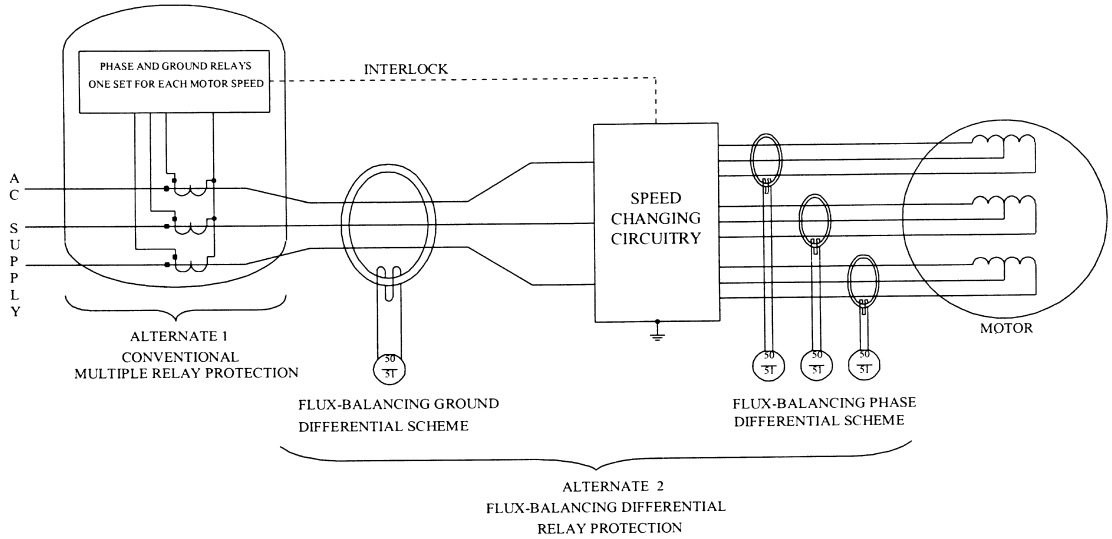

Figure 34—Two-speed motor protection

The main focus of this subclause is to outline the general protection philosophies related to the type of motor drive used. Most adjustable-speed drives employ transformer-isolated frequency conversion circuitry to drive synchronous and induction motors and, therefore, appear as transformer loads on the electrical system to which they are connected. It should be understood that these motors operate “asynchronously” from the electrical power system.

Figure 35 illustrates a method of protecting an adjustable-speed drive application. It should not be regarded as a standard or design specification, but should provide guidance in the selection of adequate protection for adjustable-speed drive motors and their associated drive equipment.

Figure 35 is based on a 6-pulse drive system. When a 12-pulse system is installed, the protection is identical because the 12-pulse system consists of two 6-pulse channels operating simultaneously, with the input source voltage to one channel shifted by 30°. In many instances, however, the input isolation transformer is a three-winding transformer with one secondary winding connected in delta, and the other secondary connected in ungrounded wye to obtain the 30° phase shift. The differential scheme would therefore, include both secondary windings. The same basic protection philosophy would be used with drive systems that have more than twelve pulse designs. Some drives use as many as 30-pulse systems.

6.3.1 Adjustable-speed drive systems

The two medium-voltage, adjustable-speed drive systems in common use are the induction motor drive and the synchronous motor drive. Both systems include an input isolation transformer, source side converter, dc link reactor (and/or capacitors), load side inverter, and motor. The synchronous motor drive also includes an excitation system. The converters employ power electronic devices (such as thyristors) to control voltage

Copyright © 2000 IEEE. All rights reserved.
Copyright The Institute of Electrical and Electronics Engineers, Inc.
Provided by IHS under license with IEEE
No reproduction or networking permitted without license from IHS
Not for Resale

and/or current. Other drive technologies would require similar protection considerations. These include pulse width modulated, voltage source inverter, and current source inverter systems.

The drive system protection can be divided into the following three zones of protection:

a) Zone 1—input transformer
b) Zone 2—power electronics (drives equipment)
c) Zone 3—motor

6.3.1.1 Input isolation transformer protection

The input isolation transformer is sized to supply the total drive system load, plus allow for additional heating due to harmonic currents generated by the drive system. No special protection is required due to the additional anticipated transformer heating.

The drive control system will typically limit starting and accelerating currents to 150% to 200% of the motor rated current. The motor acceleration time will vary depending on the final target speed selected by the operator. The transformer primary overcurrent relay settings should allow for the calculated motor acceleration curve based on the drive current limit setting.

Overcurrent protection on the secondary of the transformer should be coordinated with the transformer primary relays and the protection supplied in the drive. The overcurrent protection in the drive system will typically consist of an instantaneous or definite TOC function integral to the drive control system.

Depending on the size and importance of the drive system, transformer differential current protection may also be selected. The differential zone can be extended to include the secondary cable to the drive to provide additional cable protection by locating the current transformers in the drive input section. Many medium-voltage power systems supplying the isolation transformer are resistance grounded, thereby limiting the effectiveness of the differential relay in detecting ground faults.

Ground-fault protection is also usually provided integral to the drive system. The method of detection will vary depending on the transformer secondary connection. Zero-sequence voltage detection will be used for transformers with ungrounded secondaries. Line-to-line, voltage-rated voltage transformers, with primaries wye-connected and grounded, should be used for this application (see Figure 14). Residual current or a CT in the transformer ground connection will be used for grounded wye transformers. A typical setting for the ground-fault protection is 50% of the rated inverter current.

The input isolation transformer can be liquid filled or dry type. Liquid-filled transformers should include liquid temperature indication, liquid-level indication, and a sudden-pressure relay. Dry-type transformers should include temperature indication.

Surge protection of the transformer should be considered if the system is subjected to line voltage surges, such as lightning and switching transients. With proper coordination, this surge protection can provide some level of protection to the entire drive system from these events.

Copyright © 2000 IEEE. All rights reserved.

Copyright The Institute of Electrical and Electronics Engineers, Inc.
Provided by IHS under license with IEEE
No reproduction or networking permitted without license from IHS
Not for Resale

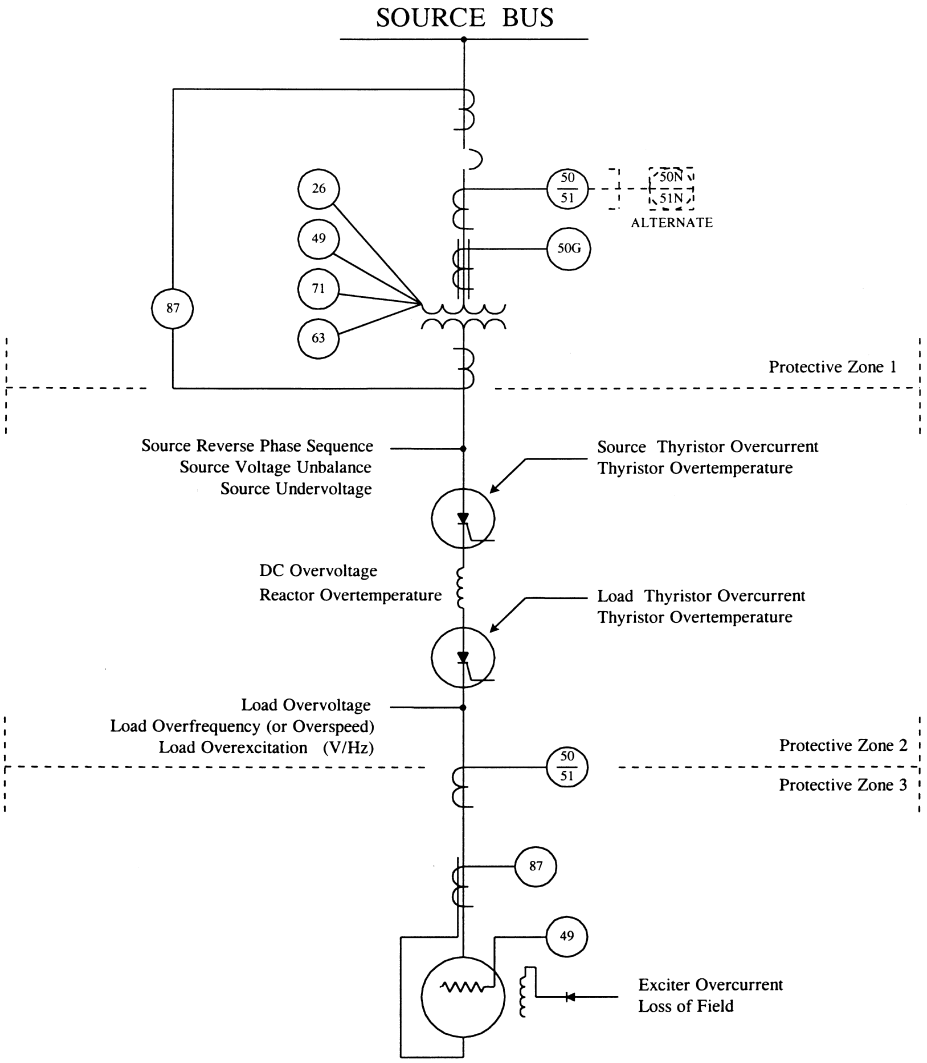

Figure 35—Variable frequency drive protection

6.3.1.2 Power electronics protection

The firing of the thyristors is controlled by the drive digital control system. The control system uses the input ac source voltage to determine proper firing angles and magnitudes. The control system is, therefore, sensitive to irregularities in the input voltage source. The control system monitors the drive input and output voltages typically via voltage transformers and attenuating resistors. The control system includes minimum and maximum voltage settings that actuate alarms and/or trips. In addition, voltage balance is also monitored. Typical alarm settings would be 90% and 110%. Trip settings will vary depending on the manufacturer; however, a typical low-voltage trip setting would be in the range of 70% for 30 seconds, and a typical high-voltage setting would be in the range of 130% for a few cycles.

Short-circuit protection is typically provided by fuses installed ahead of the thyristors. Blown fuse detection is provided by the drive control system. Upstream overcurrent relays should be coordinated with fuse characteristics.

Copyright © 2000 IEEE. All rights reserved.
Copyright The Institute of Electrical and Electronics Engineers, Inc.
Provided by IHS under license with IEEE
No reproduction or networking permitted without license from IHS
Not for Resale

Overcurrent protection is provided to protect the input and output converter thyristors and interconnecting bus or wiring from thermal overload. Input and output currents are monitored by the drive control system via current transformers. Current levels are controlled by gate pulses to the thyristors. If an overcurrent is detected, the gate pulses are suppressed to reduce current to acceptable levels. During speed changes, allowable current levels are determined by the "current limit setting." During normal operation, current levels are typically limited to rated current. If currents remain above these levels for a predetermined time, the drive is tripped.

Large drive systems depend heavily on the drive cooling system. Failure of the cooling system can cause overheating of the input and output converter thyristors in a few seconds. Drives can be air cooled or liquid cooled. In either case, temperature switches should be provided to monitor temperatures in the converter sections. In air-cooled designs, air flow switches are usually provided to monitor cooling fan operation. High temperature indication or loss of cooling air flow typically would cause a drive to trip.

The dc link reactor between the input and output converters is subject to overtemperature during abnormal operation or inadequate cooling. Multiple temperature switches are typically provided to monitor reactor ambient temperatures. Alarm and trip settings are based on the reactor insulation rating. Some drive systems include dc overvoltage detection. An overvoltage detection results in the suppression of gate pulses to reduce dc link voltage. The control system monitors dc link voltages via attenuating resistors. The exact setting of the dc overvoltage detection should be determined by the drive system manufacturer. A typical overvoltage setting is in the range of 110% to 120%.

6.3.1.3 Motor protection

The motor should be provided with the same protection as constant speed motors of the same size. In addition, because the motor may be particularly subject to abnormal voltage and frequency levels, motor protection should include overfrequency and overvoltage, or overexcitation (V/Hz). Separate V/Hz protection in addition to overvoltage and overfrequency is typically not required, because a failure of the V/Hz regulator would result in an overvoltage or overfrequency condition. This protection is typically provided by the drive control system. Other motor protection is provided by discrete relays or a multiple function protection system.

On critical motor installations, the use of a mechanical vibration detector is recommended. Machine harmonic currents from the drive output can lead to a net increase in repetitive motor vibrations and torque pulsations.

Surge protection of the motor should be considered. Additionally, the impact of applying surge capacitors to the motor and power converter should be assessed to ensure acceptable operation.

Self-excitation of the motor must be considered when large capacitors are applied on the drives, as they commonly are, and when they exceed 20 to 30 percent of the kVA rating of the motor. Self-excitation may result with high voltages at the motor's terminals during de-energization. A method of disconnecting the motor from the capacitors during power loss needs to be supplied to prevent this from occurring.

6.3.1.4 Bus-connected drive systems

Some adjustable-speed drive system installations do not include an input isolation transformer between the electrical system and the drive electronics, as shown in Figure 35. In some instances, there may be several drives supplied from a common medium-voltage bus. When the input isolation transformer is not included, coordination between the supply circuit breaker and the drive input protection becomes more difficult and some level of miscoordination is likely to exist, because it is not possible to distinguish between faults occurring in the feeder cable or those internal to the drive system.

Copyright © 2000 IEEE. All rights reserved.

Copyright The Institute of Electrical and Electronics Engineers, Inc.
Provided by IHS under license with IEEE
No reproduction or networking permitted without license from IHS
Not for Resale

The type of protection typically applied at the supply circuit breaker and the input of the drive system is identical to that shown in Figure 35. The relaying associated with transformer protection would not be included. Since the overcurrent protection supplied by the drive control system is typically a definite time function, coordination for overload protection can usually be achieved. Short-circuit protection is much more difficult to coordinate. Improved short-circuit protection coordination between the supply breaker and the drive input protection may be achieved by including some delay in the supply circuit breaker instantaneous phase and ground-fault protection; however, there is a loss of sensitivity and increase in fault-clearing times resulting in the potential for increased damage. For a dedicated circuit breaker supplying a single drive system, the benefit of selective coordination may be outweighed by the benefit of high-speed clearing of short circuits.

7. Setting and adjustment of protective devices

7.1 General discussion

The purpose of a protective relay setting is to provide optimal protection of the equipment being protected. The setting or adjustment, or both, of a protective relay function determines the magnitude of the significant quantity at which it operates. Many different types of protective relays are available, and some relays or systems protect for more than one circuit abnormality. The methods of selecting protective relay settings are detailed in this clause for the protective relay functions covered in Table 1 through Table 6. This includes the proper protective function settings for implementing multifunction, microprocessor-based protection systems.

7.2 Protective device settings

The device numbers and definitions in this section are taken from IEEE Std C37.2-1991.

7.2.1 Device 13—synchronous-speed device

Devices such as a centrifugal-speed switch, a slip-frequency relay, a voltage relay, and an undercurrent relay, or any device that operates at approximately the synchronous speed of a machine, fall into this category.

They are set to pick up after motor-starting conditions, or when the motor current has stabilized. Current and centrifugal relays are set to conditions equivalent to 95% rated speed. Slip-frequency relays are set at 1% to 5% slip, depending on the motor application.

7.2.2 Device 21—distance (impedance) relay

A distance relay is responsive to voltage, current, and the phase angle between them. It can have several characteristics on an R-X diagram. Figure 36 shows an example using an mho characteristic, but others can also be used. There is a separate circle for each setting of the relay, and the relay can be used to detect a change in impedance to verify rotor rotation. The circle is the relay balance point and determines its reach. By plotting the motor impedance curve on the R-X coordinates, a relay setting can be found that crosses the motor impedance at any desired point. The impedance and its phase angle are determined from a plot of current, torque, and power factor vs. speed at 100% voltage obtained from the motor manufacturer.

Copyright © 2000 IEEE. All rights reserved.
Copyright The Institute of Electrical and Electronics Engineers, Inc.
Provided by IHS under license with IEEE
No reproduction or networking permitted without license from IHS
Not for Resale

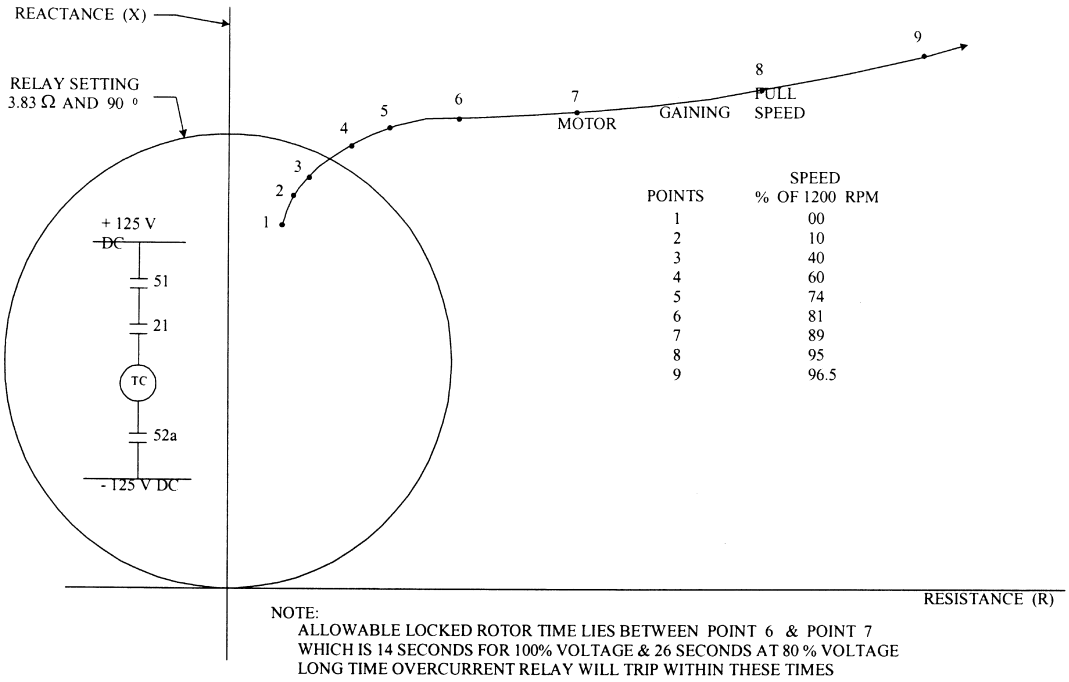

Figure 36—Locked-rotor protection with impedance relay

The size of the impedance circle can be adjusted in very small steps, so it is possible to set the relay at any desired value of starting current corresponding with any desired value of time during the starting period and, consequently, at any speed. The distance relay is set to pick up each time the motor is started and resets as the motor accelerates, as shown in Figure 36. The relay must be set to reset as low as 50% speed, as shown in Figure 36, to allow the relay's timer to reset and prevent tripping.

When the motor fails to accelerate, the distance relay stays picked up and allows a timing relay (time overcurrent or time undervoltage) to trip the motor. The timing relay is set to trip the motor within the locked-rotor thermal limit (see 5.2.7). On the other hand, the distance relay resets for successful starts before a trip can be initiated by the timing relay.

7.2.3 Device 26F—field thermal device

This device detects a thermal overload in the field, usually by measuring the current in the field either directly or by way of the voltage across a shunt. It is normally connected to an alarm. The thermal time-constant of the device should be selected to be as close to the thermal time-constant of the protected equipment as possible.

7.2.4 Device 27—undervoltage relay

This device is a relay that operates when its input voltage drops below a predetermined value. It provides an adjustable time delay so that momentary voltage dips can be prevented from interrupting the supply source (e.g., induction-type relays, which have a time delay that is inversely proportional to the degree of undervoltage).

When the relay is an instantaneous type, an auxiliary relay is often used so that the time delay is at a fixed period after the relay contacts have reached the dropout position. Instantaneous relays with timers set for very short time are often useful to enable motors to stay in operation during voltage dips, without degrading

Copyright © 2000 IEEE. All rights reserved.

Copyright The Institute of Electrical and Electronics Engineers, Inc.
Provided by IHS under license with IEEE
No reproduction or networking permitted without license from IHS
Not for Resale

the motor protection. The dropout of the undervoltage relay is normally set at approximately 80% of normal voltage. For cases where voltage drop during starting is significant, it may be necessary to adjust the relay dropout to a lower value to prevent operation during the starting period, or to activate the relay by a timer after completion of the starting period.

The timer setting, when used with an instantaneous-type undervoltage device, is normally 2–3 s. For cases where the clearing time of faults on the source circuits is exceptionally long, it may be necessary to increase this setting accordingly. In the case of high-speed tripping, the undervoltage auxiliary timer might be set to as low as 0.1 s. For induction-type relays, where the time delay is proportional to the degree of undervoltage, a time delay of 1.25–2.0 s for a reduction from normal to zero voltage is usually satisfactory. The relay automatically gives a longer time for a change in voltage from normal to some intermediate voltage value.

Where synchronous motors are located on supply circuits capable of automatic high-speed reclosure, Device 27 should be set to trip the motor-control circuit before the circuit is re-energized. If the rate of voltage decay is not fast enough to allow Device 27 to respond while the motors are disconnected, a high-speed underfrequency relay (Device 81) set for 58.5 Hz will usually suffice.

7.2.5 Device 40—field relay

Device 40 is a relay that functions on a given, abnormally low value or failure of machine field current, or on an excessive value of the reactive component of armature current in an ac machine indicating abnormally low field excitation.

To protect unloaded-start synchronous motors, a dc undercurrent relay can be connected in series with the field and set below normal operating field current. In some applications, a time-delay undercurrent relay can be used to ride through momentary changes in the flow of field current that can occur during system disturbances.

On brushless-excited-field, unity, and leading-power-factor synchronous motors, a power relay connected to measure VARs into the motor may be applied. This device should be set to operate when the VAR flow into the motor exceeds approximately 10% of rated kilovoltampere of the motor. It should remove the field and trip the motor breaker when it operates.

On large synchronous motors, a relay is used that is also commonly used on synchronous generators. This is an impedance relay that operates on an excessive value of VAR flow into an ac machine, indicating abnormally low field excitation. Where an undervoltage unit is part of this relay, its contacts should be shorted because loss of motor field may produce little voltage drop.

7.2.6 Device 46—reverse-phase or phase-balance current relay

Device 46 is a relay that functions when the polyphase currents are of reverse-phase sequence, or when the polyphase currents are unbalanced or contain negative phase-sequence components above a given amount.

7.2.6.1 Phase-balance relay

This device trips the motor-control equipment if the phase currents become more unbalanced than the design unbalance of the relay (approximately 15%). It has a minimum operating current below which the relay will not close its contacts, regardless of the magnitude of the unbalanced currents. Some relays provide a fixed operating current value, while others use current taps to vary the minimum operating current. The minimum current tap is the most sensitive and is usually selected, except when the continuous current rating of the tap is less than the motor continuous current rating. Additional time delay may be required to avoid unnecessary tripping during starting caused by unbalanced currents resulting from unbalanced CT burdens. A Device 46 relay applied to an individual motor is a suitable substitute for the third overcurrent unit, as prescribed in ANSI/NFPA 70-1999, Table 430 through Table 437.

Copyright © 2000 IEEE. All rights reserved.
Copyright The Institute of Electrical and Electronics Engineers, Inc.
Provided by IHS under license with IEEE
No reproduction or networking permitted without license from IHS
Not for Resale

7.2.6.2 Device 46—negative-sequence current relay

These relays respond to the negative-sequence component of the phase currents and are available in the instantaneous type and the inverse-time type. When negative-sequence relays are used for the Device 46 function, an inverse TOC characteristic is usually used. These relays generally have a I22t=k type of characteristic. That is, their time of operation is inversely proportional to the square of the negative-sequence component in the three-phase current. This type of relay inherently lends itself to proper coordination, even with many identical motors on one bus. Motor standards have not established values for k; however, a value of k = 40 has been used. A negative-sequence pickup setting equal to 15% of motor full-load current ensures reasonable motor protection. This will trip at a 3% negative-sequence bus voltage for a motor with a typical 20% negative-sequence impedance. This threshold condition will result in an increase in motor losses approximately 10% to 25% of normal full-load losses of the motor (but are not related to motor load).

7.2.7 Device 47—phase-sequence or phase-balance voltage relay

Device 47 is a relay that functions upon a predetermined value of polyphase voltage in the desired phase sequence, or when the polyphase voltages are unbalanced, or when the negative phase-sequence voltage exceeds a given amount.

This device is similar in its function to that of Devices 27 and 59, the single-phase voltage relays. However, being a three-phase device, it responds to the three-phase quantities of the supply system. A relay responsive to the positive- or negative- sequence component of the applied voltage satisfies this definition and most of the needs in this area. However, electromechanical positive- or negative-sequence relays are sensitive to line frequency and, hence, the setting should make allowance for the specific relay in question. This is not a significant problem when the relay is used mainly to prevent attempting to start the motor with one phase missing or with reverse-phase sequence. A 90% setting is typical for a positive-sequence voltage relay. For a negative-sequence voltage relay, 5% is a common setting. However, it should not be assumed that any 47 device will prevent insulation deterioration during all possible unbalanced conditions (see 5.7.1.3 and 7.2.6.2).

A more common type of relay used for the Device 47 function is built on the principle of a three-phase induction motor. Such a relay has a torque proportional to the area within the voltage triangle. With balanced voltages, this is proportional to the positive-sequence voltage squared. As such, the relay is usually set to close its high-voltage contact to permit starting a motor at 90% to 95% of rated value. The undervoltage contacts are usually set to close at 80% of normal voltage. The control action that is initiated by the undervoltage contacts depends on the application.

When the three-phase voltages are not balanced, the area of the voltage triangle is no longer proportional to the positive-sequence voltage squared. The torque is now proportional to the difference between the positive-sequence and negative-sequence values squared. Thus, a condition with 90% positive sequence and 10% negative sequence would result in an effective voltage of 89% of normal. Usually, an operating time setting of 2 s upon complete loss of voltage is adequate for annunciation or to initiate the desired shutdown procedure.

7.2.8 Device 48—incomplete sequence relay

Device 48 is a relay that returns the equipment to the normal or off position, and locks it out when the normal starting, operating, or stopping sequence is not properly completed within a predetermined time.

When the device is used for alarm purposes only, it should preferably be designated as Device 48A (alarm). The time of this device should be set for the normal starting time of the motor, plus a safe time margin, to ensure against unnecessary tripping caused by electrical and mechanical variables.

Copyright © 2000 IEEE. All rights reserved.

Copyright The Institute of Electrical and Electronics Engineers, Inc.
Provided by IHS under license with IEEE
No reproduction or networking permitted without license from IHS
Not for Resale

7.2.9 Device 49—machine or transformer thermal relay

Device 49 is a relay that functions when the temperature of a machine armature winding, or other load-carrying winding or element of a machine or power transformer, exceeds a predetermined value (thermal limit).

7.2.9.1 Connected for tripping

In setting thermal overload relays, it is desirable to allow the motor to carry overloads of an amount and duration that will not damage it. For this reason, a nominal pickup (minimum tripping current at ultimate tripping time) of 115% to 125% of motor full-load current should be multiplied by the correction factor listed in Table 8; then this adjusted motor full-load current may be used to choose the heater or coil from the relay manufacturer's table.

The manufacturers' recommendations for selection of a given continuous or short-time rating may differ from Table 8 and should be given due consideration.

Table 8—Correction factors for motor full-load currents

Time rating of motor	Correction factor
Continuous, 1.15 service factor	1.0
Continuous, 1.0 service factor	0.9
Short time, 60 min	0.8
Short time, 30 min	0.75
Short time, 15 min	0.7
Short time, 5 min	0.6

Most thermal overload relays provided in the smaller size motor contactors have no adjustable element. The relay heaters or coils are listed to provide protection for motors having rated currents within a specified current range. Frequently, these ranges are specified so that the relay will operate (ultimate trip point) at 125% of the minimum current and at 115% of the maximum current of the indicated range of the relay. When the actual motor full-load current is near the maximum of the listed range, and an operating point of at least 125% is desired, then the next higher rated coil or heater is required. In such a case, the actual operating point may be somewhat above the 125% of full-load current desired. Where the overload is adjustable (commonly 10%), a trip setting can be obtained at any desired value.

For relays available for large contactors or purchased separately for circuit-breaker controlled motors, the coils or heaters will be provided in steps similar to those discussed above. However, they generally have a specified nominal value and an arrangement that changes the nominal value over a range from 80% to 90% to a range of 110% to 120% of the nominal value. In this way, a continuous range of operating values is obtainable.

When a minimum relay trip value has been selected (i.e., fixed, in the case of nonadjustable relays, or set, in the case of adjustable relays), it is usually beneficial to check a point on the relay curve to determine if the applied setting is reasonably close to the desired value. To accomplish this, the relay is tested at two values of current, measuring the time to trip from a cold (ambient temperature) start for each current. When tested

Copyright © 2000 IEEE. All rights reserved.
Copyright The Institute of Electrical and Electronics Engineers, Inc.
Provided by IHS under license with IEEE
No reproduction or networking permitted without license from IHS
Not for Resale

at 200% of its current rating in a 40 °C ambient temperature, the relay shall trip in not more than 8 min. When tested at 600% of its current rating in a 40 °C ambient temperature, a Class 20 relay shall trip in not more than 20 s, and a Class 30 relay in not more than 30 s. At lower ambient temperatures, the tripping times will be longer. The manufacturer's instructions should be followed carefully for those applications with significantly high ambient temperatures.

Solid-state and digital devices are available that may be used in place of thermal overload relays. These devices offer the traditional overload protection for a range of motor sizes and, additionally, include protective features for multiple restarts, jams, underloads, single phasing, phase unbalance, and phase reversal. Often, there is an adjustment to select the motor load current, a choice of protection (Class 10, 20, or 30), and an adjustment for percent current unbalance. These devices normally offer the choice of manual or remote reset. In addition, they do not have to be adjusted for controller ambient. (See Clause 8 for further details.)

7.2.9.2 Connected for alarm

The method of setting a relay connected to provide an alarm is similar in all respects to that used for a relay connected to trip. However, it is important to note that (when relays are connected to sound an alarm) an alarm can only be effective in preventing damage if it is obtained in time to take corrective action. The setting should not be greater than 110% to 115% of motor full-load current. Some users set alarm relays at the full-load current rating of the motor, on the premise that the normal load may be as low as 75% of the rated load, and a load increase to the rated value indicates some sort of trouble that should be investigated.

7.2.9.3 Relay operated from embedded detectors

Relays that measure the actual winding temperature by means of embedded detectors are preferred by some users for large motors. The temperature at which they should be set to operate depends on the class of motor insulation and whether the relays are to trip or give an alarm. The motor manufacturer should be consulted for recommendations regarding settings. They are frequently set for tripping at 5 °C below the allowable continuous temperature for the type of insulation used.

Embedded temperature detectors are frequently used where motors must operate under adverse conditions, such as ambient temperature or inadequate ventilation, and should be accompanied by a thermal relay. Usually, the embedded temperature detectors supplement the protection provided by a thermal relay. Positive- or negative-temperature coefficient thermistors or thermal switches are also available that can be mounted on or attached to the stator winding for temperature measurement. Such devices so mounted are necessarily less responsive to winding temperature changes than are embedded resistance detectors.

Relays utilizing both embedded detectors and motor current in combination are available to users desiring this type of protection. The manufacturer should be consulted regarding their application and setting.

7.2.10 Device 50/51—fuses and overcurrent devices

a) ***Device 50—IOC or Rate-of-Rise Relay.*** A relay that functions instantaneously on an excessive value of current or on an excessive rate of current rise. This function indicates a fault in the apparatus or circuit being protected.

b) ***Device 51—AC Time Overcurrent Relay.*** A relay that functions when the ac input current exceeds a predetermined value and in which the input current and operating time are inversely related through a substantial portion of the performance range.

7.2.10.1 Fuses

Fuses for motor branch circuit overcurrent protection must have adequate interrupting abilities, as well as current ratings and performance characteristics that will allow the motor to start and still provide, for all

Copyright © 2000 IEEE. All rights reserved.

Copyright The Institute of Electrical and Electronics Engineers, Inc.
Provided by IHS under license with IEEE
No reproduction or networking permitted without license from IHS
Not for Resale

values of overcurrent, as much protection as possible for the motor, the motor branch circuit conductors, the disconnecting means, and the motor controller. These fault-current protective devices are in addition to the separate overcurrent devices included for motor running overcurrent (overload) protection.

Non-time-delay fuses with current ratings of 250% to 300% of the motor full-load current value are usually required to allow the motor to start and permit normal protective device operation at operating overloads. The fusing ratio range may be reduced from 250% to 300% to 200% to 250% of motor full-load current, thus providing improved fault-current protection when reduced voltage starting is used. For fuse ratings of 600 A or less, the fuse rating may be increased to 400% if required by the motor-starting current. The time-current characteristics of the fuses must be properly correlated with the time-current characteristics of the overload relays, so that the overload relays operate before the fuse in the range of operating overloads of the motor. Also, the fuse must operate before the overload relay trips and the contactor opens for values of fault current exceeding the interrupting ability of the contactor. In the case of thermal overload relays, the fuse-clearing time characteristic should intersect the overload relay time characteristic at currents not much greater than ten times the heater rating; this protects the heaters and overload relay from permanent damage from fault currents exceeding this range.

Time-delay (dual-element) fuses with current ratings of 165% to 180% of the motor full-load current are usually required to allow the motor to start and permit normal protective device operation at operating overloads. The maximum fusing ratio should not exceed 225% of the motor full-load current. The time-current characteristics of these fuses should also be properly coordinated with the time-current characteristics of the overload relays to obtain the same type of performance described in the previous paragraph. The current ratings of non-time-delay and time-delay fuses should be approximately equal to the motor full-load current value when used as the sole overcurrent device for protection against operating overloads and high fault currents. Time-delay fuses may be considered more acceptable for this function over a wider range of ambient temperatures because of their ambient-temperature sensitivities and the increased response times of operating overloads.

For current-limiting fuses, their current-limiting capability should also be considered in making a selection for circuits having high available short-circuit current. The interrupting ratings of all fuses must be equal to or greater than the available short-circuit current at their respective locations.

Current-limiting fuses are sometimes applied with a circuit breaker in a fused breaker combination. This allows the circuit breaker to be applied to a system with fault capability greater than the breaker's interrupting rating.

7.2.10.2 Characteristics of fuses

When inverse characteristics are used, it may be difficult to coordinate time-delay fuses with overload relays in the low fault-current range. The amount of damage due to high fault currents that may occur to motor branch-circuit components depends on the let-through energy of the fuse. The smaller the rating of the fuse, the more current-limiting is the fuse, and the lower the expected damage.

7.2.10.3 Device 50—instantaneous overcurrent

When the phase fault current at the terminals of a motor is considerably larger than the starting current or the motor contribution to a fault, a high-set instantaneous trip unit can be set at 165% to 250% of locked-rotor current to trip directly (see Figure 37). The general requirement for using this instantaneous unit or separate instantaneous relay is that the setting be as low as possible, yet never operate during the starting period. Because this type of relay may be susceptible to operation on dc offset, the inrush current value is multiplied by a factor to account for the asymmetrical current value that may be obtained. The degree of offset is determined by the angle of the sine wave at the time of motor energization. The duration of the offset is determined by the X/R ratio. The factor’s value varies up to a maximum of 1.73. Higher asymmetrical currents are usually associated with higher voltage equipment (4.16–13.8 kV) and stronger fault-current

Copyright © 2000 IEEE. All rights reserved.
Copyright The Institute of Electrical and Electronics Engineers, Inc.
Provided by IHS under license with IEEE
No reproduction or networking permitted without license from IHS
Not for Resale

sources. If the protective device effectively removes the dc offset from the current signal into it, the IOC can be set more sensitively. If the inrush current is not accurately known, an additional 10% to 25% is usually added as a safety factor when settings are calculated. The relay tolerance (usually 10%) is then added to arrive at the final setting.

In instances where the bus may experience a fast transfer or reclosing, voltage and angle differences may cause inrush currents exceeding those of normal motor starting. The instantaneous unit setting should then consist of the calculated maximum asymmetrical current, at the maximum transfer voltage differential, plus the relay tolerance and margin. Settings of 250% have been applied by some users. Some users prefer to set this high-set instantaneous relay by actual operation test. The usual procedure is to set the relay so that it will trip on startup, and then gradually increase the setting during successive starts until a setting is reached that prevents tripping for three to five starts. When this setting has been established, a 10% margin in pickup current or plunger calibration is usually added as a safety factor. In using this setting procedure, the number of motor starts within any time period should not exceed the motor manufacturer's recommendation. It should be recognized that this method of establishing a setting may not detect a faulty relay and, as a result, may provide inadequate protection and possible miscoordination with other devices. This method can inflict unnecessary starts upon motors, and may result in future nuisance tripping if the maximum asymmetrical current did not occur during the initial testing.

When it is necessary to set a direct tripping IOC lower to provide adequate fault protection, an IOC trip can be delayed with a short time delay (6 to 15 cycles) to prevent operation on the asymmetrical starting current, as shown in Figure 38. When applying the time delay, the user should make sure that all of the equipment can withstand the maximum available fault current for the total clearing time (relay operate time + auxiliary time delay + circuit breaker operating time). Some static relays have eliminated the need for the auxiliary time delay by having an inverse characteristic incorporated into the IOC function. This inverse characteristic is shown in segment E of the relay curve of Figure 39.

An IOC relay can also be used to supervise a TOC relay (see Figure 40). See 7.2.10.7 for details on setting the TOC relay. This scheme allows the TOC relay to trip for faults and serious overloads, but to alarm only for small overloads. Typically, the IOC relay is a high-dropout-type unit set between 125% to 200% of full-load current. Factors leading to the more sensitive settings include cases where the load currents are known and constant (e.g., a pump application, where the motors are unsupervised, and the process can stand to lose a single motor). Higher settings are warranted where short-term load increases are experienced (e.g., a mill or crusher, where operators are present to respond to alarms and reduce the motor overload, or where the motor is so important to the process that motor loss of life is preferred to the interruption of operation, such as a safety injection pump at a nuclear plant). Whatever the setting, consideration should be given to the dropout to pickup ratio of the IOC. This ratio must be high enough so that the dropout of the IOC unit occurs prior to the reduction of the current to the full load value.

Copyright © 2000 IEEE. All rights reserved.

Copyright The Institute of Electrical and Electronics Engineers, Inc.
Provided by IHS under license with IEEE
No reproduction or networking permitted without license from IHS
Not for Resale

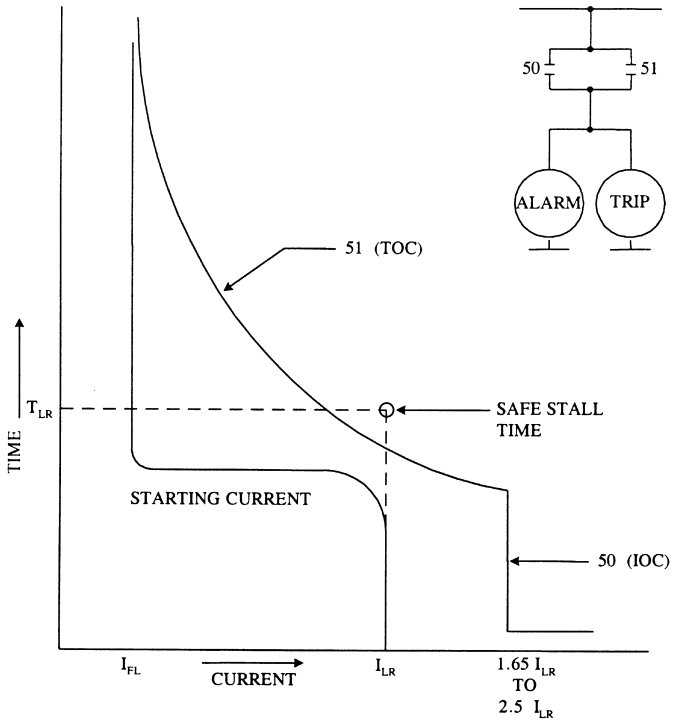

Figure 37—Typical setting of 50/51 overcurrent relays

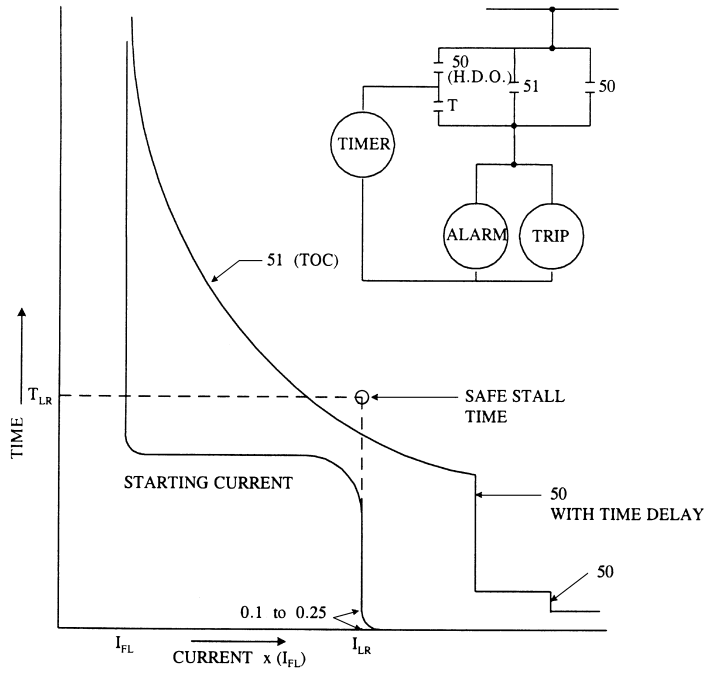

Figure 38—Typical setting of 50/51 overcurrent relays with separate time-delayed instantaneous element

Copyright © 2000 IEEE. All rights reserved.
Copyright The Institute of Electrical and Electronics Engineers, Inc.
Provided by IHS under license with IEEE
No reproduction or networking permitted without license from IHS
Not for Resale

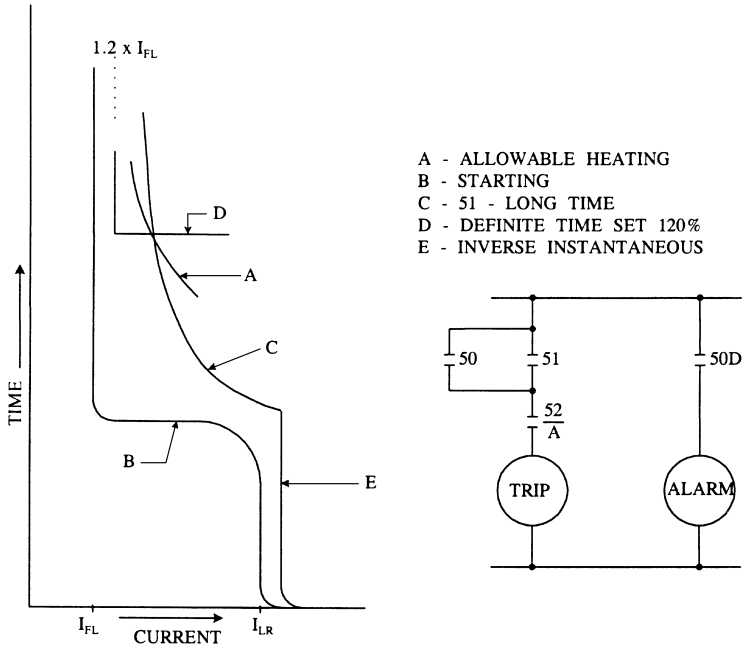

Figure 39—Complete overcurrent protection characteristics

On high-inertia drive motors, or other motors with low starting voltage, the motor-starting time may be equal to or exceed the allowable locked-rotor time. It is unlikely that a TOC relay can be set to provide startup protection without tripping during normal startup. In certain cases, an IOC with a high dropout to pickup ratio may be employed to supervise the TOC relay. The IOC relay is set at approximately 85% of the motor's locked-rotor current [see Figure 10 (a)]. The dropout to pickup ratio must be high enough to ensure that the IOC relay will drop out before the TOC relay times out if the motor accelerates and the start current reduces from its locked rotor (LR) value. With this scheme, the TOC relay performs an alarm function for overloads, since the instantaneous unit blocks tripping once the motor is running. (See 5.2.7 for additional information on high-inertia drive motor applications.)

7.2.10.4 Low-voltage circuit breakers

7.2.10.4.1 Low-voltage power circuit breakers

Where motors are controlled by low-voltage power circuit breakers (LVPCBs), it is recommended that the circuit breaker overcurrent trip device long-time pickup be no less than 115% of the motor rated full-load current, or as recommended in ANSI C37.16-1988, Table 6. With the easily adjustable trip characteristics available on LVPCBs, in long-time delay, short-time delay, and instantaneous tripping, these circuit breakers provide adequate motor overload protection. The instantaneous trip setting should be above 1.75 and up to 2.00 times the locked-rotor current of the motor. Careful attention should be given to this setting based on the type of motor (efficiency) and the protective device or system capability.

7.2.10.4.2 Motor circuit protectors

Motor circuit protector (MCP) is an industry name that has been applied to molded-case circuit breakers having special instantaneous trips only and designed primarily for motor short-circuit protection. According to ANSI/NFPA 70-1999, Articles 430–452, an instantaneous trip circuit breaker should be used only if adjustable, if part of a combination controller having motor running overload as well as short-circuit and ground-fault protection in each conductor, and if the combination is especially approved for the purpose

Copyright © 2000 IEEE. All rights reserved.

Copyright The Institute of Electrical and Electronics Engineers, Inc.
Provided by IHS under license with IEEE
No reproduction or networking permitted without license from IHS
Not for Resale

(i.e., “listed”). ANSI/NFPA 70-1999 further states that the setting of an instantaneous trip circuit breaker shall be permitted to be increased, but in no case shall exceed 1300% of the motor full-load current. (An exception to this is given in ANSI/NFPA 70-1999 for NEMA Design E motors, which shall be set at no more than 1700% of motor full-load current.)

7.2.10.5 Motor short-circuit protectors

ANSI/NFPA 70-1999 permits the use of motor short-circuit protectors (MSCPs). These fuse-like devices, with extremely steep characteristics and a very high interrupting capacity, permit extremely small let-through current. They must be rated at not more than 1300% of motor full-load current. The devices are required to be part of a combination controller having both motor-running overload protection and short-circuit and ground-fault protection in each conductor, and the combination must be specifically approved for the purpose. (See IEEE Std 242-1986 for further details.)

7.2.10.6 Device 50G—instantaneous ground-current relay

7.2.10.6.1 Ground-sensor relay

This relay, which is energized by current from a toroidal or doughnut CT around the three supply conductors to a motor, is intended to provide very sensitive ground-current protection for motors. Since the three-phase currents in the primary of the CT add to zero, the relay is responsive only to ground-fault current (see Figure 32).

Minimum primary current pickup occurs when the CT exciting impedance and relay impedance are matched. The CT exciting curve and relay instructions provide the information needed to approach this optimum match. The lowest relay tap does not, in general, give the lowest primary current pickup for electromechanical relays. Low-energy devices, such as solid-state relays, generally have the lowest primary pickup on the lowest tap.

7.2.10.6.2 Ground-fault (flashover) relay

For the fast tripping of wound-rotor induction motors when a flashover from slip rings to ground has occurred, Device 50 or 59 is used. The device consists of a low-current IOC relay, a set of wye-delta voltage transformers, and a resistor. The voltage transformers are selected so that their wye- or high-voltage windings are rated equal to, or somewhat greater than, the slip-ring voltage. The neutral is solidly grounded, and the phase leads are connected to the slip-ring leads. The relay and resistor are connected in series across the open corner of the delta secondaries (see Figure 20). The resistor value is selected so that with the relay impedance, it limits the fault current for a solid ground on one slip ring to 25–30 A. The relay pickup should be set for approximately 2 A.

7.2.10.7 Device 51—TOC relays

7.2.10.7.1 Induction-type overcurrent relays

These relays, frequently equipped with one or two IOC attachments, are commonly applied for protection of motor circuits. For applications where the TOC relay is used in conjunction with thermal relays, the pickup is set at 150% to 175% of the rated-load current. In cases where a motor is required for emergency conditions, such as fire pumps, nuclear safety, or other critical chemical processes, and the motor can be sacrificed, higher settings can be considered. A TOC relay with an IOC attachment can be set at 115% of full-load current. It alarms for moderate overloads below the IOC setting, and trips for more severe overloads or faults. [See Figure 40, where the 50 (HDO) element is set at 150% of full-load current; and see 7.2.10.3 for setting the 50 (HDO) element.]

Copyright © 2000 IEEE. All rights reserved.
Copyright The Institute of Electrical and Electronics Engineers, Inc.
Provided by IHS under license with IEEE
No reproduction or networking permitted without license from IHS
Not for Resale

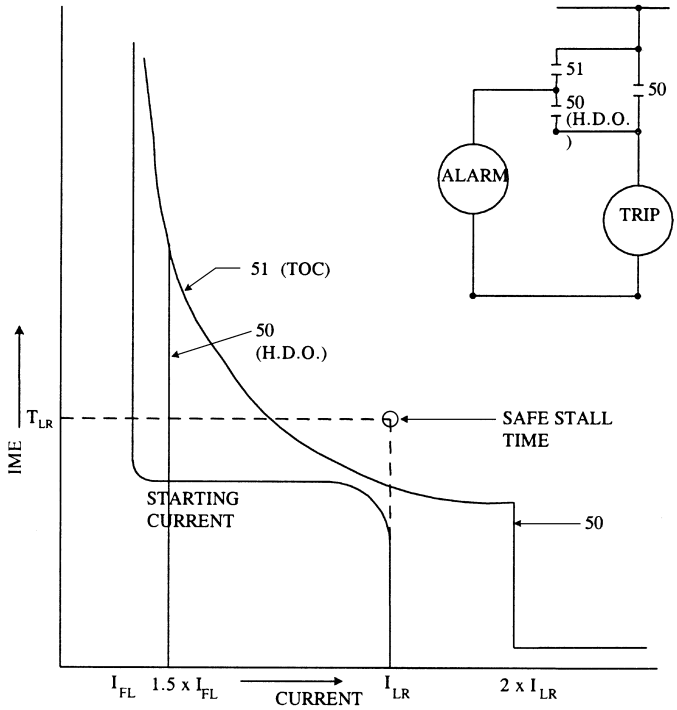

Figure 40—Typical setting of 50/51 when 50 supervises 51

When used for locked-rotor protection, the time-delay setting should be selected to provide 2–5 s margin above the starting time at rated voltage. Due consideration should be given the integrating effect of the motor-starting current on the relay. When the start time is in the 5–10 s range, a 2 s margin is satisfactory. For a start time of 40–50 s, a margin of 5 s is more appropriate.

When the time delay cannot be set to obtain the desired margin above starting current and still protect the motor (i.e., trip before the motor thermal limit is exceeded), it may be desirable to supervise the TOC with another device (see 5.2.7). In such an application, it may be necessary to set the TOC pickup at 175% to 250% of motor full-load current. This results from the need to prevent pickup of the TOC relay before the mho relay resets, thus causing unnecessary tripping of the motor on a successful start.

In some cases, it may be possible to obtain a better match to the motor thermal limit by using two TOC relays with different time-current characteristics (see 5.4.3). This could be a more desirable solution if use is made of the motor’s accelerating thermal limit (see 5.2.7). The first relay should have a more sensitive pickup setting of 115% to 125% of service factor current and provide protection for the majority of the motor's running thermal damage curve. The second relay would have a much higher pickup setting of 200% to 300%, with an inverse characteristic adjustable to provide protection of the motor's acceleration thermal limit, while allowing adequate margin for motor starting.

Special long-time inverse, very inverse, and extremely inverse characteristics are available, and may sometimes provide better coordination for locked-rotor protection on motors with varying starting times (see Figure 39).

Motors that drive large fly wheels, in addition to normal loads, are usually of a special design and have starting currents ranging from somewhat less than normal, to over twice the starting current normally expected

Copyright © 2000 IEEE. All rights reserved.

Copyright The Institute of Electrical and Electronics Engineers, Inc.
Provided by IHS under license with IEEE
No reproduction or networking permitted without license from IHS
Not for Resale

for the nominal horsepower. Since starting current characteristics of such motors vary so widely, overload protection should be verified against specific motor requirements.

7.2.10.7.2 Plunger-type overcurrent relays

Plunger-type, time-delay overcurrent relays are used, in some cases, in the same manner as induction-type overcurrent relays. The minimum operating current and the time of operation at rated inrush current are selected and set in the same manner as given in 7.2.10.7.1 for induction-type relays.

7.2.10.7.3 Solid-state overcurrent relays

The use of solid-state, microprocessor-based digital measuring techniques has expanded the scope of protection to a considerable degree. Solid-state, microprocessor-based relays provide improved filtering, tripping criteria, measuring algorithm, setting, and testing features. Accuracy is especially important for parameters such as overload protection. Existing relays often have inaccuracy in current measurements, which can vary from 5% to 10%. These inaccuracies can result in significant increases in thermal losses. The solid-state, microprocessor-based relays minimize these errors by means of

a) Increasing the flexibility by designing one multifunction and field programmable relay version (see 8.3).
b) Increasing the reliability and decreasing the maintenance with continuous supervision.
c) Multifunction features, flexible programmability, and accurate display capability of various abnormalities, such as current, thermal content, phase unbalance, and starting current (see Clause 8 for further details).

7.2.10.8 Device 51G—residually connected ground-overcurrent relay

Device 51G is a relay energized from current in the residual circuit of three wye-connected current transformers, one in each phase. Quite frequently, there may be dissimilarities in the burdens in each phase, and unsymmetrical saturation of current transformers during the inrush period may cause incorrect operation of the relay. For this reason, care should be exercised to ensure that the relay tap setting, series impedance, or both are such as to prevent false tripping. The lowest possible pickup setting is desirable. A low-burden phase relay, such as a solid-state relay, may be used to advantage here.

In some cases, a large individual motor may be supplied from a wye-connected transformer. In such instances, the use of a transformer-neutral CT for an instantaneous relay (which would then be designated 50N) eliminates the possibility of relay operation, except for actual ground-current flow.

7.2.10.9 Device 51R—extreme overload (pullout) protection relay

This device is used to protect large (1500 hp or larger) unloaded-start synchronous motors against extreme overload when the motor is running to cause it to pull out of step. It is made operative only after the motor is synchronized and set to operate above the maximum acceptable motor overload. The device should open the main ac circuit and remove field voltage.

7.2.10.10 Inverse time circuit breaker

Time-limit circuit breakers have inverse time characteristics and function when the current in an ac circuit exceeds a predetermined value. ANSI/NFPA 70-1999, Articles 430–455, allows their use in combination with running overcurrent overload protection devices for a motor branch circuit.

--`,,`-`-`,,`,,`,`,,`---
Copyright © 2000 IEEE. All rights reserved.
Copyright The Institute of Electrical and Electronics Engineers, Inc.
Provided by IHS under license with IEEE
No reproduction or networking permitted without license from IHS
Not for Resale

7.2.11 Device 53—exciter or dc generator relay

Device 53 is a relay that forces the dc machine field excitation to build up during starting or that functions when the machine voltage has built up to a given value.

This device checks the presence of dc voltage, and is used to protect against loss of excitation for synchronous motors when excitation is obtained from a common bus or separately driven exciter. It may also be used to force voltage buildup on a direct-connected exciter at the moment of motor synchronization.

It is a field voltage check relay set at approximately 90% of rated field voltage of the synchronous motor.

7.2.12 Device 55—power-factor relay

Device 55 is a relay that operates when the power-factor in an ac circuit rises above or falls below a predetermined value.

This device detects synchronous motor loss of synchronism, which is caused by increased loading or decreased excitation. Loss of synchronism causes the motor to pull out of step with the supply system, producing high line-current pulses and possible physical damage to the motor.

Some of the relays and systems used have an adjustable power-factor angle setting and an adjustable time delay. The relay actuation can be used to remove the synchronous motor from the line (or in rare special cases, to operate an alarm). It is usually set or connected for maximum contact closing torque when current into the motor lags its unity power-factor position by 120–150°. It will then operate for conditions occurring when the motor loses synchronism (producing watt flow out of the motor and VAR flow into it), or when the synchronous motor field is lost. The minimum time delay is favored, but the duration of transient effects must be considered when making the time-delay setting.

Most power-factor angle relays are not put into service until after the motor has reached synchronizing speed and the field has been applied. A timing device in the potential circuit to the relay accomplishes this. The timer allows the potential circuit to be applied to the relay after the allotted time has elapsed for the motor to reach synchronous speed. Some of these relays are not adjustable and operate on line-current power factor.

7.2.13 Device 56—field application relay

Device 56 is a relay that automatically controls the application of the field excitation to an ac motor at some predetermined point in the slip cycle.

This is a frequency relay used to determine that motor speed is 1% to 5% away from synchronous speed and, in conjunction with a time-delay relay, to apply field when conditions are proper to close the field breaker. On some motors, where continuity of service is a factor, this same relay is also used to remove the field during an out-of-step condition, and then to automatically reapply the field at the proper time and condition.

7.2.14 Device 60—voltage or current balance relay

A relay that operates on a given difference in voltage or current input or output of two circuits.

In the context of this guide, Device 60 is an overcurrent relay that is connected to operate on the differential current from current transformers in the split windings of a motor. The relay should be set above the maximum error current caused by winding unbalance. This unbalance can vary with different operating conditions, so it is wise to observe the unbalance under light load, full load, and starting conditions. Ordinarily, 10% of full-load pickup is secure. A delay of approximately 0.3 s for 100% full-load current is recommended.

Copyright © 2000 IEEE. All rights reserved.

Copyright The Institute of Electrical and Electronics Engineers, Inc.
Provided by IHS under license with IEEE
No reproduction or networking permitted without license from IHS
Not for Resale

7.2.15 Device 81—frequency relay

A relay that responds to the frequency of an electrical quantity, operating when the frequency or rate of change of frequency exceeds, or is less than, a predetermined value.

An underfrequency relay is recommended for the protection of motors from out-of-phase re-energization by automatic reclosing of the supply when the motor is decelerating. The same device can be used for automatic load shedding at abnormally low frequency. The application and setting of this device should be made from a study of the system supply and motor load characteristics, as indicated in 5.8.2.

7.2.16 Device 86—lockout relay

Device 86 is a hand or electrically reset auxiliary relay that is operated upon the occurrence of abnormal conditions to maintain associated equipment or devices inoperative until it is reset.

It is used for tripping a motor controller or circuit breaker when a differential relay (Device 87) initiates the tripping. The hand-reset feature prevents re-energizing of the motor after such a trip-out, unless the operator resets the lockout relay. The device requires no setting other than an operation check at the minimum control voltage.

7.2.17 Device 87—differential protective relay

Device 87 ia a protective relay that functions on a percentage, phase angle, or other quantitative difference of two currents or of some other electrical quantities.

The ordinary percentage-differential relay used for motor protection does not require a setting in the same sense that an overcurrent relay does. A 10% slope is generally used, with 25% preferred where substantial CT mismatch exists. Care should be exercised to make certain that the CT and relay windings are properly connected, and it may be desirable to check the slope of the relay characteristic.

Occasionally, ordinary induction overcurrent relays are connected in a differential circuit to provide differential protection for a motor. In such a case, the pickup setting of the relay should be selected to give the desired sensitivity. The value should be in the range of 10% to 20% of motor full-load current, provided the CT ratio and relay minimum-current tap allow a setting of this range. A typical time-delay setting is 0.1 s. For flux-balancing differential schemes, relays should be set in accordance with instructions for setting Device 50G.

8. Device 11—multifunction, microprocessor-based protection systems

8.1 General

In Clause 7, the discussions of motor protection have, for the most part, assumed single-function relays of basically electromechanical design, although variations of these (i.e., solid-state and microprocessor-based, single and multifunction relays) have been manufactured and applied for some time. However, as multifunction, microprocessor-based systems are seeing wider use, a general discussion of their characteristics is in order.

An overview of microprocessor-based motor protection systems can be divided into five categories. These have to do with enhanced thermal modeling, integration of multiple functions into one package, control features, data collection/reporting/remote communications, and certain application issues. Each of these categories is presented in detail in 8.2 through 8.6.

Copyright © 2000 IEEE. All rights reserved.
Copyright The Institute of Electrical and Electronics Engineers, Inc.
Provided by IHS under license with IEEE
No reproduction or networking permitted without license from IHS
Not for Resale

Microprocessor-based systems differ widely among manufacturers with regard to required data input and settings. However, unless specifically stated otherwise, settings for the various protective elements are made with the same lines of reasoning as their discrete counterparts.

8.2 Thermal protection in microprocessor-based motor protection systems

Thermal protection of induction motors has been one of the major areas where multifunction, microprocessor-based protection systems have improved the basic level of motor protection. The method of thermal protection has improved from RTD-based thermal relays and thermal replica relays (relying solely on fixed current characteristics), to more advanced methods using positive- and negative-sequence current heating based on various simulations of induction motor stator and rotor thermal characteristics.

The development of a practical method of providing thermal protection has revolved around applying induction motor models to a microprocessor-based algorithm, which can thermally protect motor components by limiting component temperatures. The microprocessor approach has the advantage that it can measure specific state variables of the motor, eliminating the need to simulate the total electrical, mechanical, and thermal characteristics. The microprocessor-based algorithms are well adapted to implementing time-discrete forms of the model state equations. (See Annex A for a detailed discussion of induction motor thermal modeling.)

8.2.1 Motor-starting thermal protection

Current, voltage, stator temperatures, and motor speed/slip can be measured by a protective relay during motor starting. In most cases, the number of inputs required depends on the motor application. Motors with large margins between the motor-starting time and the locked-rotor thermal limit time can usually be protected by inverse time-current relay characteristics. Usually, one characteristic covers the motor locked-rotor period, and a second characteristic covers the acceleration period.

As motor-load torques approach motor-starting torques, and motor-load inertia increases, the margin between starting times and locked-rotor thermal limit times decreases. This problem usually requires a modified time-current characteristic during starting that is derived from the expected starting current and slip characteristics. This method uses the slip characteristics to derive the appropriate time-current characteristic, but does not directly measure the motor slip or speed. Some microprocessor-based systems calculate or “learn” the motor characteristics during starting and modify the starting protection characteristics accordingly.

For high-inertia, motor-load combinations, where the starting time exceeds the locked-rotor thermal limit time to the extent that motor slip becomes a critical factor in determining rotor heating, some form of slip characteristic must be derived or a measurement of slip must be made during starting. Microprocessor-based protection systems can calculate slip using direct speed measurements, or measurements of starting motor impedance. This is used in the representation of the rotor heating to include the reduced heating effect as the motor speed increases.

Some motor protection relays detect the motor temperature and compensate the thermal calculations to provide more accurate temperature tracking. Most microprocessor-based motor protection systems include a rotor cooling calculation for multiple motor-starting applications, which mimics the actual rotor cooling characteristics. In sophisticated systems, this algorithm may be used to project the heating duty for starting conditions and prevent the start if insufficient heating capacity is available due to prior running or starting history.

Copyright © 2000 IEEE. All rights reserved.

Copyright The Institute of Electrical and Electronics Engineers, Inc.
Provided by IHS under license with IEEE
No reproduction or networking permitted without license from IHS
Not for Resale

8.2.2 Motor running thermal protection

Motor running protection is usually accomplished by a combination of motor thermal simulation and compensated RTD measurements to limit the stator temperatures to a set running temperature, which takes into account the thermal time constants of the stator. Cooling characteristics are calculated and then corrected with the RTDs using the RTD time constant.

The microprocessor has the capability to recognize an RTD failure and take the appropriate action. In most cases, the microprocessor can calculate a temperature based on assumed ambient conditions, even without any RTD inputs for both heating and cooling of the stator.

In addition to the use of stator RTDs in the thermal modeling for its motor overload algorithm, RTD inputs for bearing temperature may also be utilized by microprocessor-based protection systems. The algorithm for such detection is much simpler than the one for the motor, and the rise in the bearing temperature can be used for annunciation and/or tripping. Details of protection achieved through bearing RTD monitoring is discussed in 5.6.

Negative-sequence heating is usually included in both the rotor and stator thermal protection algorithms, and is added to the normal heating effects to provide an overall heating from all sources to the rotor and stator. This provides an integrated approach to motor heating. Usually, alarm levels for high negative-sequence currents are provided for determining the source of an overheating problem during running conditions.

In general, the choice of an appropriate microprocessor-based motor protection system depends on the motor application. The microprocessor-based thermal protection system has improved motor protection by means of closely tracking temperature limits and protecting motor components directly.

8.3 Multiple functions generally incorporated into one package

Multifunction, microprocessor-based motor protection (Device 11) is a rapidly evolving technology, and there is wide variation in the protective functions provided by the products currently available. Following is a broad discussion of the different features provided by multifunction, microprocessor-based motor protection systems for three-phase, squirrel-cage induction motors (see Figure 41). Note that additional devices or different protection packages may be required for synchronous motors, wound-rotor motors, single-phase motors, dc motors, and adjustable-speed drive motors.

One important variation among microprocessor-based motor protection systems is that some incorporate motor control functions and some do not. (Details of typical control functions are presented in 8.4.) Another variation involves voltage inputs—some systems incorporate voltage, and some do not.

--`,,`-`-`,,`,,`,`,,`---

Copyright © 2000 IEEE. All rights reserved.
Copyright The Institute of Electrical and Electronics Engineers, Inc.
Provided by IHS under license with IEEE
No reproduction or networking permitted without license from IHS
Not for Resale

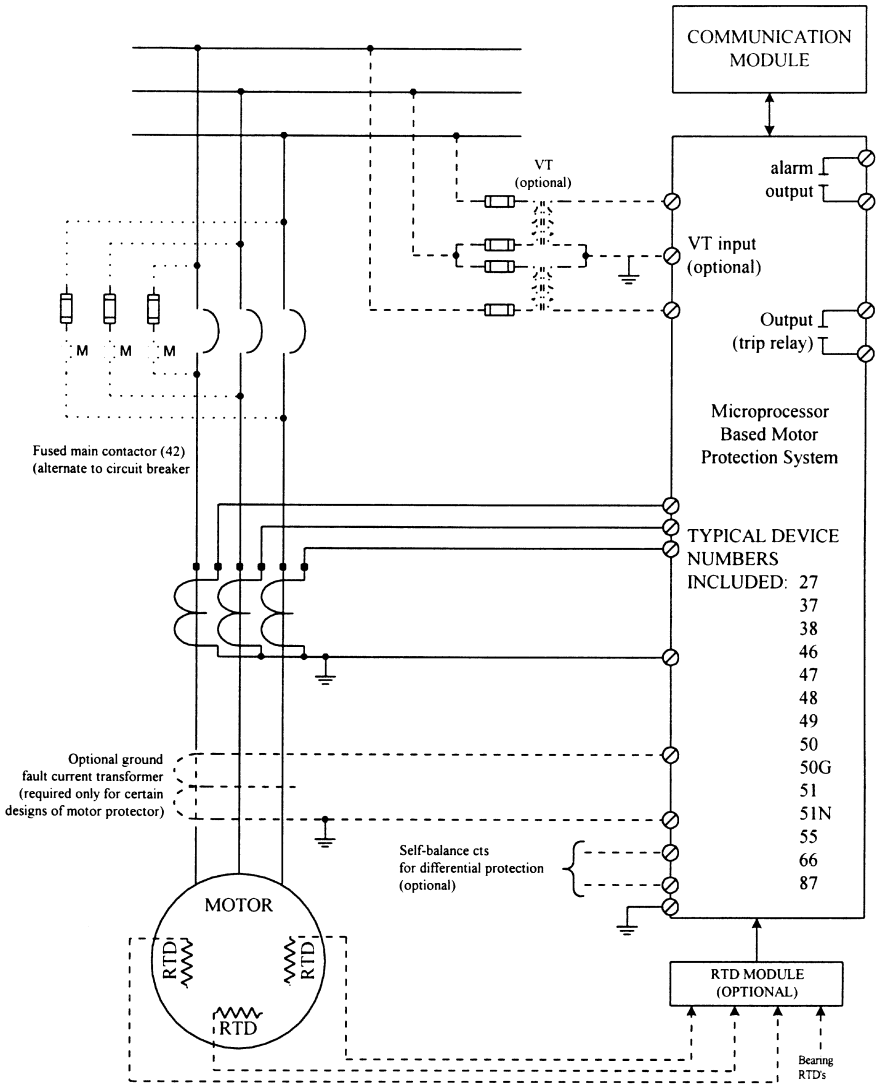

Figure 41—Basic microprocessor-based motor protection system

Most of the multifunction protective packages (Device 11) currently available provide the following basic functions:

— **Thermal Overload (49):** Provides protection against motor running overload by a thermal replica element, with or without input from RTDs (49R) embedded in the motor stator windings. See 8.2.2 for more background on this feature.

— **Locked-Rotor Protection (51):** Provides TOC protection for the motor during starting, specifically against stalled rotor conditions.

— **Instantaneous Phase Overcurrent (50):** Provided to limit damage from phase faults, and may require current inhibiting features to block opening of the motor contactor when the fault current exceeds the interrupting rating of the contactor.

— **Ground Overcurrent (50G, 51N):** The ground-fault protection schemes include either a zero-sequence CT connected to an instantaneous ground sensor device (50G), or phase CTs residually connected to a TOC ground device (51N).

Copyright © 2000 IEEE. All rights reserved.

Copyright The Institute of Electrical and Electronics Engineers, Inc.
Provided by IHS under license with IEEE
No reproduction or networking permitted without license from IHS
Not for Resale

— **Phase-Current Unbalance (46):** Provided to detect an open-phase or motor winding-to-winding short circuit, and usually includes a negative-sequence overcurrent element as well.

— **Jam/Stall (51):** Provided to detect a jam condition only after the motor reaches full speed.

— **Load Loss or Undercurrent (37):** Provided to detect the loss of the motor-driven load.

— **Undervoltage Protection (27):** Provided to prevent motor overheating from prolonged undervoltage operation.

— **Frequency of Start (66):** Provided to alarm or trip when the number of attempted starts within a given time frame exceeds a set number. This function is usually settable as number of starts per hour.

Additions to the basic package may include one or more of the following:

— **External RTD Interface (49R):** Improves the protection provided by thermal overload elements, and may also be used for excessive bearing temperature detection.

— **Phase Differential (87):** Usually provided for large motors. Can be either the flux-balancing type using one CT for two ends of each phase, or the percentage-differential type using two CTs per phase.

— **Phase-Sequence or Phase-Voltage Balance (47):** Provides protection for reversed phase sequence or single phasing.

— **Maximum Start Time (48):** Provides protection for an incomplete start sequence.

— **Load Increase (51L):** Detects unexpected load increase over an extended period.

— **Overvoltage (59):** Prevents motor damage from excessive excitation current.

— **Low Power Factor (55):** Detects a low power factor due to loss of excitation on a synchronous motor.

— **Current Inhibit:** Blocks opening of the contactor when the fault current exceeds the contactor current interrupt rating.

— **Monitoring Functions:** These may include visual display of primary current and voltage, prealarm of overtemperature conditions, event recording, continuous self-checking, communication facility, and alarms for failure of communication links, internal failures, and control circuit opening.

8.4 Control functions and features

Some of the microprocessor-based protection systems include varying degrees of motor control capabilities. The control functions and features included range from a single contact output (to block motor starting), to multiple output relays dedicated to control the contactors/breakers for a variety of starting methods. These two broad categories are described in 8.4.1 and 8.4.2. The system may also include analog (transducer) inputs and outputs, which can be used for controlling the output relays or motor load.

8.4.1 Block start contact output

This contact is intended to block an external START circuit under some predefined conditions. Typical conditions, which operate the block start contact, are as follows:

— The number of starts in a set time frame is exceeded.

— The elapsed time since the last start is less than a set value.

— The elapsed time since the motor was stopped is less than a set value. For reversible motor applications, this feature ensures that the motor is fully stopped before an attempt is made to start in the opposite direction.

Copyright © 2000 IEEE. All rights reserved.
Copyright The Institute of Electrical and Electronics Engineers, Inc.
Provided by IHS under license with IEEE
No reproduction or networking permitted without license from IHS Not for Resale

— The thermal model indicates insufficient thermal capacity available to successfully start the motor.
— The system is not reset from the last trip event.

8.4.2 Control relay outputs

This feature allows the system to control the motor start and stop functions, essentially replacing several discrete devices, like timers and auxiliary relays, that are normally used in a typical motor start/stop circuit. The start and stop signals are communicated to the microprocessor-based protection system via either hard-wired contacts or its communications port. The logical decisions are made by the system based on its settings, which operate the output relays in proper sequence to start/stop the motor. Any blocking of the start command (mentioned in 8.4.1) is incorporated into this system logic. The output relays, in turn, control the motor contactor(s) or breaker(s). Following are some of the starting methods that require unique sequencing of the output relays:

— **Direct Online Starting:** This is also known as across-the-line starting, and operates the output relay that starts the motor at full line voltage.
— **Reduced-Voltage Starting:** An autotransformer, star (wye)/delta motor windings (reconfigurable on line), or primary inline reactors are typically used to start the motor at reduced voltage, and are subsequently switched to provide full voltage to the motor when certain predefined conditions are met. The output relays of the system would properly sequence the motor contactors or breakers based on the selected method.
— **Forward/Reverse Starting:** The system would operate an appropriate output relay in response to the forward or reverse start signal.
— **Two-Speed Starting:** The system would operate an appropriate output relay in response to the high- or low-speed start signal, and switch to appropriate protection settings based on the high- or low-speed motor operation.
— **Inverters:** The system would operate appropriate output relays in response to a start signal to apply power to the inverter and, after an appropriate time delay, would send a start signal to the inverter. The system may monitor ramp-up and ramp-down times for proper operation (reduced voltage start).

8.5 Data collection, reporting, and remote communications

Modern microprocessor-based motor protection systems have the capability to gather motor data that can be used for monitoring, data logging, trending, process control, and troubleshooting functions. Typical motor operating data that can be retrieved from such systems include

— Motor stator and bearing temperatures
— Phase currents and voltages
— Time to trip (due to an overload condition)
— Motor status in relation to alarms and trips
— Number of starts (in a given period of time)
— Number and types of trips and fault parameters
— Running hours
— Real power (kW), reactive power (kVAR), and apparent power (kVA)
— kWh and kVAh
— Power factor

Various methods may be used to extract data/information, depending on the user's actual needs. The most common methods are as follows:

Copyright © 2000 IEEE. All rights reserved.

Copyright The Institute of Electrical and Electronics Engineers, Inc.
Provided by IHS under license with IEEE
No reproduction or networking permitted without license from IHS
Not for Resale

— The use of a PC-based program

— Gathering the motor data from the protection system into a programmable logic controller (PLC) and creating logic functions for process control

— Utilizing the communication capability of the microprocessor-based protection system to incorporate the data into an integrated supervisory and process control system, or a remote terminal unit (RTU) connected to a central distributed control system (DCS) or to a Supervisory Control and Data Acquisition (SCADA) system

Practically all of system parameters can be retrieved via the built-in digital communication capability of the modern microprocessor-based protection system. As mentioned above, major hardware for the data acquisition, process control, and remote communication systems includes the PLC, SCADA system, DCS, and coaxial or fiber optic data link networks. Various types of software may be used for information retrieval or downloading. These software packages have the following common features and uses:

— Continuous monitoring of all the microprocessor-based systems in the plant
— Sequence of event (SOE) recording and reporting
— Oscillographic data capturing
— Easy storage and retrieval of protective element settings
— Trending analysis.

The monitoring program can continuously monitor the microprocessor-based protection system(s) and determine the status of the associated motor(s) in real time. This provides information related to the running/stopped condition and any alarms or trips by the type of motor(s) connected to the communication system. Typically, all motor setpoints and statuses can be read, such as phase currents and voltages, stator and bearing RTD temperatures, unbalanced current, ground current, and metering quantities (kW, kVAR, kWh, pf, and frequency).

The sequence of event record feature can mark the time and date of significant events. It allows for the recording of all trips and alarms of a particular motor. Retrieval of pretrip and oscillographic data provides insight into the cause of the trip so that fault diagnostic time can be minimized.

In the event of a motor malfunction, a trend analysis feature can be used to obtain some insight. By accessing at regular intervals the microprocessor-based protection system associated with a given motor, the monitoring program can accumulate a database of the points for a given parameter or several parameters, which can be utilized for the trending analysis.

The microprocessor-based protection system can also record historical data for the motor, such as running hours, number of starts, and number of trips, including a list of the number trips by type (i.e., overload, unbalance, ground, RTD, etc.).

8.6 Application issues

The use of multifunction, microprocessor-based protection systems has gained widespread acceptance as manufacturers have improved design techniques and testing methods to overcome earlier problems, such as susceptibility to conducted and radiated electromagnetic noise and power supply failures. They are being used in new installations and in older plants to replace electromechanical relays. When retrofitting older systems, decisions not to use microprocessor-based systems are usually made only when direct electromechanical replacements are readily available in stock, or when existing control power is not compatible with standard off-the-shelf microprocessor-based systems (requiring the new devices to be customized). In the nuclear industry, similar decisions are often made because safety/nuclear-qualified microprocessor-based protection systems are not readily available.

Copyright © 2000 IEEE. All rights reserved.
Copyright The Institute of Electrical and Electronics Engineers, Inc.
Provided by IHS under license with IEEE
No reproduction or networking permitted without license from IHS
Not for Resale

Annex A

(informative)

Induction motor thermal protection basics

Motors are designed so that temperatures derived from characteristic hot spots created during worst-case heating conditions, such as rotor temperature during starting do not exceed the design maximums. Following is an explanation of how motor thermal design and application can affect the requirements for the motor-starting relay protection system.

A.1 Induction motor heating fundamentals

The standard positive-sequence electrical model for an induction motor is shown in Figure A.1.

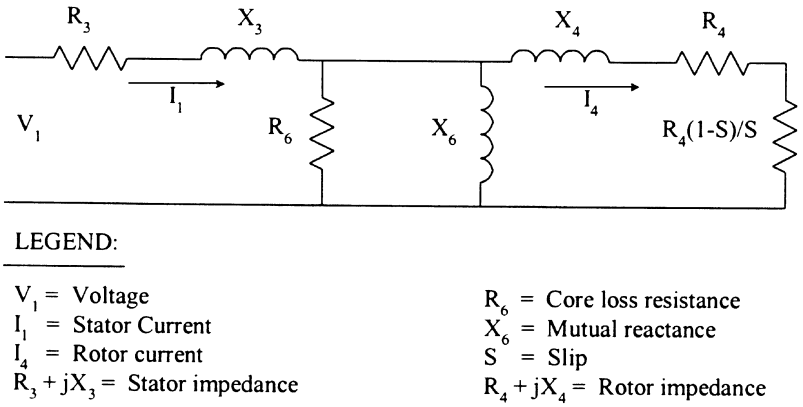

Figure A.1—Electrical model

For heating effects, the resistances of the electrical model are the key factors. R_3 represents the stator conductor heating from the stator current I_1. R_6 represents the excitation core heating. R_4 represents the rotor conductor heating. $R_4(1–S)/S$ is the resistance that accounts for the slip-dependent watts converted to mechanical power.

Representing the temperature of a conductor being heated by a current through its resistance is important to motor thermal protection. Figure A.2 represents the thermal model. There are a number of important factors in considering conductor heating from this resistance. First, the resistance heating is evenly distributed along the conductor and has a very quick time constant for temperature rise. The time constant is assumed to be zero for this case. From Figure A.2, it can be seen that the total resistance is the sum of the resistances of each section. Because of the uniformity of the heating characteristic along the conductor length, the temperature rise is consistent along the length when there is no heat loss and the average temperature of the conductor is being calculated. Equation (2) in Figure A.2 shows the relationship between the resistance, current, and thermal capacitance.

The same type of analysis shown in Figure A.2 for conductor heating can be used for the magnetic core heating because the eddy-current losses are evenly distributed throughout the material, and the excitation current

Copyright © 2000 IEEE. All rights reserved.

Copyright The Institute of Electrical and Electronics Engineers, Inc.
Provided by IHS under license with IEEE
No reproduction or networking permitted without license from IHS
Not for Resale

flowing through the resistance is analogous to the current flowing through the conductor. The thermal capacitance is a different value for the magnetic material than it is for the conductor material. Therefore, using this different value, temperature rise in the core can be calculated in the same way as temperature rise in the conductor.

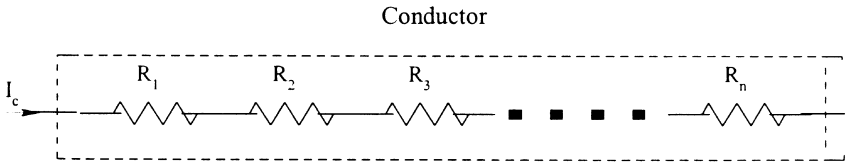

(1) $R_c = \sum_{1}^{n} R_i$ = Conductor resistance

Temperature rise:

(2) $T_c - T_o = \sum_{1}^{n} (1/C_{TH})\, I^2 R_i (t_c - t_o)$

LEGEND:

R_c = the conductor total resistance
R_i = the resistance of a small section of the conductor
T_c = the conductor temperature from the resistive heating
T_o = the initial conductor temperature before resistive heating
C_{TH} = the thermal capacitance in watt- sec/°C
t_c = time duration of resistive heating in seconds
t_o = initial time before resistive heating in seconds

Figure A.2—Conductor temperature characteristics

A.2 Induction motor thermal characteristics during starting

The starting times for induction motors are short compared to the time required for the heat to flow from the rotor conductors to the stator and ambient air. Therefore, the temperature rise during starting can be approximated based on no loss of heat during the starting cycle. This is conservative, but provides a good approximation. The rotor resistance, R_4, generates the heating in the rotor during motor starting. This conductor resistance heating is similar to the heating example in Figure A.2. The temperature rise in the rotor is given by the following equation:

Rotor temperature rise

$$T_c - T_0 = \Sigma(1/C_{TH}) I_4^2 R_i (t_c - t_o) \quad \text{(A-1)}$$

Given that the resistance of the rotor is uniform over its length, Equation (A-1) can be reduced to

$$T_c - T_0 = (1/C_{TH}) I_4^2 R_r (t_c - t_o) \quad \text{(A-2)}$$

where

R_r is the total resistance of the rotor.

Equation (A-2) is valid over any range where the current, I_4, and the resistance, R_r, are constant. This condition is true for the locked-rotor starting condition. In Figure A.1, this is represented by a slip (S) equal to 1.0,

Copyright © 2000 IEEE. All rights reserved.
Copyright The Institute of Electrical and Electronics Engineers, Inc.
Provided by IHS under license with IEEE
No reproduction or networking permitted without license from IHS
Not for Resale

which reduces the term $R_4(1–S)/S$ to zero. The locked-rotor current generates heat in the rotor conductors over the full time period. The locked-rotor limit curve represents this condition, and is the motor manufacturer's limit for locked-rotor current of a given magnitude. As demonstrated by Equation (A-2), the locked-rotor limit represents a limiting temperature rise in the rotor. The cold locked-rotor curve represents starting at the ambient temperature of the rotor, and the hot locked-rotor curve represents starting at the running temperature of the rotor.

The only complication in calculating this temperature is knowing the rotor resistance, which changes with temperature and speed. This makes the calculation more complex than Equation (A-2), but it will be used to demonstrate the heating characteristics during locked-rotor conditions.

From Figure A.1, it can be seen that once the motor begins to turn and the slip changes to something less than one, the term $R_4(1–S)/S$ becomes non-zero. Because of the relative sizes of X_4 and R_4, this change does not significantly affect the starting current until the slip is much lower. I_4 does not change dramatically until the slip reaches a relatively low value. During this time, the motor appears to still be in the locked-rotor condition as far as the current magnitude is concerned, even though a large portion of the energy may be going into acceleration of the rotor and not into heating of the conductors.

The reason for this is that the rotor resistance changes as the motor accelerates. At the locked-rotor condition, the rotor resistance is seeing a current at a frequency of 60 Hz. As the motor begins to accelerate, the frequency seen by the rotor resistance decreases in proportion to the speed. The decrease in current frequency results in a decrease in the "skin effect" current, which decreases the resistance of the rotor as the term $R_4(1–S)/S$ increases. The same current flowing in the rotor with the motor accelerating has much less of a heating effect in the rotor.

A.3 Motor-starting protection

This speed-based heating characteristic of induction motors during starting can complicate the method of starting protection. This complication occurs when the I^2t of the motor (including the accelerating torque) for a normal start begins to approach the I^2t of the motor in the locked-rotor condition. As long as the starting I^2t of the motor is much less than the locked-rotor I^2t, overcurrent relays looking at the stator current can protect the motor. The only requirement is that the overcurrent curves be able to provide an appropriate characteristic that coordinates with the locked-rotor thermal limit curves.

For motors with very high-inertia loads, the I^2t based on the stator currents during starting may equal or exceed the locked-rotor I^2t. To allow the high-inertia motor to start and to protect it during starting, a relay with the capability of distinguishing the portion of the starting I^2t, which is actually heating the rotor from the portion going to the second term R_4 (1–S)/S, is required. In this way, the heating I^2t can be calculated and compared to the locked-rotor I^2t limit. This will allow the relay to protect the rotor from a temperature that exceeds its design limit. The techniques used to accomplish this are described in the high-inertia motor-starting protection clauses.

A.4 Summary

The protection engineer must have an understanding of motor thermal characteristics to successfully protect the motor during starting. Choice of an appropriate motor-starting protection scheme requires that the protection engineer be able to determine whether the motor is a high-inertia starting application. Knowledge of the rotor variable heating characteristics and of the acceleration characteristics of the motor and the load will aid in selecting the appropriate scheme.

Copyright © 2000 IEEE. All rights reserved.

Copyright The Institute of Electrical and Electronics Engineers, Inc.
Provided by IHS under license with IEEE
No reproduction or networking permitted without license from IHS
Not for Resale

Annex B

(informative)

Bibliography

B.1 Induction motors—general

[B1] AIEE Committee Report, "Survey of Induction Motor Protection," *AIEE Transactions on Power Apparatus and Systems*, vol. 79, pp. 188–192, June 1960.

[B2] Berndt, M. W., and Schmitz, N. L., "Derating of Polyphase Induction Motors Operated with Unbalanced Line Voltages," *AIEE Transactions on Power Apparatus and Systems*, vol. 81, pp. 680–686, February 1963.

[B3] Chidambara, M. R., and Ganapathy, S., "Transient Torques in 3-Phase Induction Motors During Switching Operations," *AIEE Transactions on Power Apparatus and Systems*, vol. 81, pp. 47–55, April 1962.

[B4] Courtin, J. J., "New NEMA Rerating of AC Motors," *AIEE Transactions on Industry and General Applications*, vol. IGA-1, pp. 320–324, September/October 1965.

[B5] Cummings, P. G., "Temperature Rise and Service Factor Standards for AC Motors," Annual American Power Conference, April 1971.

[B6] DeMello, F. P., and Walsh, G. W., "Reclosing Transients in Induction Motors with Terminal Capacitors," *AIEE Transactions on Power Apparatus and Systems*, vol. 79, pp. 1206–1213, February 1961.

[B7] Eliasen, A. N., "High-Inertia Drive Motors and Their Starting Characteristics," *IEEE Transactions on Power Apparatus and Systems*, pp. 1472–1482, July/August 1980.

[B8] EPRI Power Plant Series, "Motors," vol. 6, 1987.

[B9] Gafford, B. N.; Duesterhoeft, W. C., Jr.; and Mosher, C. C., III., "Heating of Induction Motors on Unbalanced Voltages," *AIEE Transactions on Power Apparatus and Systems*, vol. 78, pp. 282–288, June 1959.

[B10] Heidreder, J. F., "Induction Motor Temperature Characteristics," *AIEE Transactions on Power Apparatus and Systems*, vol. 77, pp. 800–804, October 1958.

[B11] Heidreder, J. F., Robinson, R. C., and Merrill, E. F.; "Relationship Between High-Temperature Operation and the Performance Guarantees of Induction Motors," *IEEE Transactions on Power Apparatus and Systems*, vol. 82, pp. 597–600, August 1963.

[B12] Howell, J. K., and Courtin, J. J., "Temperature Protection for Induction Motors—Today and Tomorrow," *Westinghouse Engineer*, November 1959.

[B13] IEEE Committee Report, "Bibliography of Rotating Electric Machinery for 1962–1965," *IEEE Transactions on Power Apparatus and Systems*, vol. PAS-87, pp. 679–689, March 1968.

[B14] IEEE Committee Report, "Bibliography of Rotating Electric Machinery for 1966–1968," *IEEE Transactions on Power Apparatus and Systems*, vol. PAS-89, pp. 1293–1304, July/August 1970.

Copyright © 2000 IEEE. All rights reserved.
Copyright The Institute of Electrical and Electronics Engineers, Inc.
Provided by IHS under license with IEEE
No reproduction or networking permitted without license from IHS
Not for Resale

[B15] Jain, G. C., "The Effect of Voltage Waveshape on the Performance of a 3-Phase Induction Motor," *IEEE Transactions on Power Apparatus and Systems*, vol. 83, pp. 561–566, June 1964.

[B16] Karr, F. R., "Squirrel-Cage Motor Characteristics Useful in Setting Protective Devices," *AIEE Transactions on Power Apparatus and Systems*, vol. 78, pp. 248–252, June 1959.

[B17] LaFuze, D. L., "Internal Fault Currents in Multicircuit Induction Machines," *AIEE Transactions on Power Apparatus and Systems*, vol. 73, pp. 1428–1433, December 1954.

[B18] Lawrence, W. H., "Large Electric Motors for the Petroleum Industry," *AEI Engineering*, March/April 1963.

[B19] MacMaster, J. F., "Design Features of an Electrically Driven Gas Compressor Station," PIEA-PESA Annual Conference, Galveston, TX, April 1964.

[B20] Martiny, R. M., McCoy, R. M., and Margolis, H. B., "Thermal Relationships in an Induction Motor Under Normal and Abnormal Operation," *AIEE Transactions on Power Apparatus and Systems*, vol. 80, pp. 66–76, April 1961.

[B21] Moore, R. C., "Fault Contributions of Large Induction Motors," *Allis-Chalmers Electrical Review*, vol. 26, no. 1, pp. 14–17, 1961.

[B22] Moore, R. C.,"WK 2 vs. Rotor Loss," *Allis-Chalmers Electrical Review*, vol. 25, no. 3, 1960.

[B23] Ooi, B. T., and Barton, T. H., "Starting Transients in Induction Motors with Inertia Loads," *IEEE Transactions on Power Apparatus and Systems*, vol. PAS-91, pp. 1870–1874, September/October 1972.

[B24] Oscarson, G. L., "Applications of Large AC Motors and Controls in Refineries and Pipe Lines," *AIEE Transactions on Applications and Industry*, vol. 73, pp. 296–301, November 1954.

[B25] Picozzi, V. J., "Factors Influencing Starting Duty of Large Induction Motors," *AIEE Transactions on Power Apparatus and Systems*, vol. 78, pp. 401–407, June 1959.

[B26] Stone, G. C., and Sharma, D. K., "Investigation of Turn Insulation Failure Mechanism in Large AC Motors," *IEEE Transactions on Power Apparatus and Systems*, pp. 2588–2595, September 1984.

[B27] Woll, R. F., "Effect of Unbalanced Voltage on the Operation of Polyphase Induction Motors," Paper PCI 73-35, IEEE Petroleum and Chemical Industry Conference, Houston, TX, September 10–12, 1973.

B.2 Synchronous motors—general

[B28] Barkle, J. E., Sterrett, C. C., and Fountain, L. L., "Detection of Grounds in Generator Field Windings," *AIEE Transactions on Power Apparatus and Systems*, vol. 74, pp. 467–472, June 1955.

[B29] Concordia, C., *Synchronous Machines—Theory and Performance*, New York: Wiley, 1951.

[B30] Dunki-Jacobs, J. R., "A New Technical Approach Related to Starting Large Motors on Weak Power Systems," IEEE Petroleum Industry Conference, Houston, TX, September 13–15, 1965.

[B31] Godwin, G. A., and Merrill, E. F., "Oscillatory Torques During Synchronous Motor Starting," *IEEE Transactions on Industry and General Applications*, vol. IGA-6, pp. 258–265, May/June 1970.

Copyright © 2000 IEEE. All rights reserved.

Copyright The Institute of Electrical and Electronics Engineers, Inc.
Provided by IHS under license with IEEE
No reproduction or networking permitted without license from IHS
Not for Resale

[B32] Hoffman, A. H., "Brushless Synchronous Motors for Large Industrial Drives," *IEEE Transactions on Industry and General Applications*, vol. IGA-5, pp. 158–162, March/April 1969

[B33] Hamid-Sepen, D., "Transfer Functions of Loaded Synchronous Machines," *AIEE Transactions on Industry and General Applications*, vol. 78, pp. 19–24, March 1959.

[B34] Hoffmann, A. H., Raczkowski, C., and Squires, R. B., "Relaying for Synchronous Motor Pullout Protection," *AIEE Transactions on Power Apparatus and Systems*, vol. 78, pp. 618–624, August 1959.

[B35] Horn, M. E., and Cunningham, J. C., "Transient Voltage and Current Requirements of Main-Field Circuit Breakers for Synchronous Machines," *AIEE Transactions on Power Apparatus and Systems*, vol. 73, pp. 894–900, August 1954.

[B36] IEEE Committee Report, "Bibliography of Rotating Electric Machinery for 1948–1961," *IEEE Transactions on Power Apparatus and Systems*, vol. 88, pp. 589–606, June 1964.

[B37] IEEE Committee Report, "Proposed Excitation System Definitions for Synchronous Machines," *IEEE Transactions on Power Apparatus and Systems*, vol. PAS-88, pp. 1248–1258, August 1969.

[B38] IEEE Committee Report, "Recommended Phasor Diagram for Synchronous Machines," *IEEE Transactions on Power Apparatus and Systems*, vol. PAS-88, pp. 1593–1610, November 1969.

[B39] Peterman, M., and Wright, D., "Brushless Synchronous Motors," IEEE Petroleum Industry Conference, Houston, TX, September 13–15, 1965.

[B40] Peterson, R. S., "Use of Synchronous Motor Drives for Maintaining Distribution System Line Voltage and Power Factor," *IEEE Transactions on Industry and General Applications*, vol. IGA-71971, pp. 696–707, November/December, 1971.

[B41] Phillips, C. L., and Yuen, M. H., "High-Speed Restarting and Protection of Large Synchronous Motors," *AIEE Transactions on Industry and General Applications*, vol. 78, pp. 360–368, November 1959.

[B42] Raman, K. S., and Gross, E. T. B., "Rapid Demagnetization of Large Synchronous Machines," *IEEE Transactions on Power Apparatus and Systems*, Special Supplement, pp. 642–653, 1963.

[B43] Rosenberry, G. M., Jr., "A New Brushless DC Excited Rotating Field Synchronous Motor," *AIEE Transactions on Applications and Industry*, vol. 79, pp. 136–139, July 1960.

[B44] Sano, K., "Pole-Changing of Salient-Pole Synchronous Machines," *AIEE Transactions on Power Apparatus and Systems*, pp. 948–954, December 1960.

[B45] Subba-Rao, V. S., and Langman, R. A., "Analysis of Synchronous Machines Under Unbalanced Operations," *IEEE Transactions on Power Apparatus and Systems*, vol. PAS-89, pp. 698–706, May/June 1970.

[B46] Thames, P. B., and Heard, T. C., "Torsional Vibrations in Synchronous Motor-Geared-Compressor Drives," *AIEE Transactions on Power Apparatus and Systems*, vol. 78, pp. 1053–1056, December 1959.

[B47] Tremaine, R. L., and Blackburn, J. L., "Loss-of-Field Protection for Synchronous Machines," *AIEE Transactions on Power Apparatus and Systems*, vol. 73, pp. 765–777, August 1954.

[B48] White, J. C., "Synchronous Motor Starting Performance Calculations," *AIEE Transactions on Power Apparatus and Systems*, vol. 75, pp. 772–778, August 1956.

Copyright © 2000 IEEE. All rights reserved.
Copyright The Institute of Electrical and Electronics Engineers, Inc.
Provided by IHS under license with IEEE
No reproduction or networking permitted without license from IHS
Not for Resale

[B49] Wichmann, A., "Reliability and Testing High-Voltage Stator Insulation for Large Rotating Machines," *IEEE Transactions on Power Apparatus and Systems*, vol. PAS-91, pp. 2230–2236, September/October 1972.

[B50] Zimmerman, J. A., and Hauck, T. A., "Starting Requirements and Effects of Large Synchronous Motors," *IEEE Transactions on Industry and General Applications*, vol. IGA-5, pp. 169–175, March/April 1969.

[B51] Zimmerman, J. A., and Richardson, W. O., "Motor Starting with Capacitors," *IEEE Transactions on Industry and General Applications*, vol. IGA-5, pp. 759–765, November/December 1969.

B.3 Variable speed applications

[B52] Alager, P. L., and Jalaluddin, "Stepless Starting of Wound-Rotor Induction Motors," *AIEE Transactions on Industry and General Applications*, vol. 81, pp. 262–272, November 1962.

[B53] Bedford, R. E., and Nene, V. D., "Voltage Control of Three-Phase Induction Motor by Thyristor Switching: A Time-Domain Analysis Using the A-B-O Transformation," *IEEE Transactions on Industry and General Applications*, vol. IGA-6, pp. 553–562, November/ December 1970.

[B54] Bellini, A., and Cioffi, G., "Induction Frequency Control: Three-Phase Bridge Inverter Behavior and Performance," *IEEE Transactions on Industry and General Applications*, vol. IGA-7, pp. 488–499, July/August 1971.

[B55] Bellini, A., Decarli, A., and Murgo, M., "Speed Control of Synchronous Machines," *IEEE Transactions on Industry and General Applications*, vol. IGA-7, pp. 332–338, May/June 1971.

[B56] Lavis, A. and Polge, R. J. "Induction Motor Speed Control with Static Inverter in Rotor," *IEEE Transactions on Power Apparatus and Systems*, vol. PAS-85, pp. 76–84, January 1966.

[B57] Long, W. F., and Schmitz, N. L., "Cycloconverter Control of Doubly Fed Induction Motor," *IEEE Transactions on Industry and General Applications*, vol. IGA-7, pp. 95–100, January/February 1971.

[B58] Robertson, S. D. T., and Hebbar, K. M.,"Torque Pulsations in Induction Motors with Inverter Drives," *IEEE Transactions on Industry and General Applications*, vol. IGA-7, p. 318, March/April 1971.

[B59] Tsivitse, P. J., and Klingshirn, E. A., "Optimum Voltage and Frequency for Polyphase Induction Motors Operating with Variable Frequency Power Supplies," *IEEE Transactions on Industry and General Applications*, vol. IGA-7, pp. 323, 480–487, July/August 1971.

[B60] Wright, W. F., Hawley, R., and Dinely, J. L., "Brushless Thyristor Excitation Systems," *IEEE Transactions on Power Apparatus and Systems*, vol. PAS-91, pp. 1848–1854, September/October 1972.

[B61] Wurgler, H. U.,"The World's First Gearless Mill Drive," *IEEE Transactions on Industry and General Applications*, vol. IGA-6, pp. 524–527, September/October 1970.

[B62] Zagalsky, N., and Shepherd, W., "Wide-Range Reversible Voltage Controllers for Polyphase Induction Motors," *AIEE Transactions on Industry and General Applications*, vol. 81, pp. 272–277, November 1962.

Copyright © 2000 IEEE. All rights reserved.

Copyright The Institute of Electrical and Electronics Engineers, Inc.
Provided by IHS under license with IEEE
No reproduction or networking permitted without license from IHS
Not for Resale

B.4 Protection relays and settings—general

[B63] *Applied Protective Relaying*, Coral Springs, FL: Westinghouse Electric Corporation, Relay and Telecommunications Division, 1982.

[B64] Barnes, H. C., Murray, C. S., and Varrall, V. E., "Relay Protection Practices in Steam Power Stations," *AIEE Transactions on Power Apparatus and Systems*, vol. 77, pp. 1360–1367, February 1959.

[B65] Bellinger, T. F. and Gerg, R. A., "Getting Closer Overload Protection for Polyphase Motors," *Allis-Chalmers Electrical Review*, vol. 25, no. 2, pp. 32–34, 1960.

[B66] Blackburn, J. L., *Protective Relaying, Principles and Applications*, New York: Marcel Dekker, Inc., 1987.

[B67] Brightman, F. P., McGee, R. R., and Reitschneider, P. J.,"Protecting AC Motors with Low-Voltage Air-Circuit-Breaker Series Trips," *AIEE Transactions on Industry and General Applications*, vol. 76, pp. 114–119, July 1957.

[B68] Brightman, F. P., "More About Setting Industrial Relays," *AIEE Transactions on Power Apparatus and Systems*, vol. 73, pp. 397–406, April 1954.

[B69] Brightman, F. P., "Selecting AC Overcurrent Protective Device Settings for Industrial Plants," *AIEE Transactions on Industry and General Applications*, vol. 71, pp. 203–211, September 1952.

[B70] Dalasta, D. and Zocholl, S. E., "New Solid-State Protective Devices for Utility Power Plant Applications," Protective Relaying Conference, Georgia Institute of Technology, Atlanta, GA, 1973.

[B71] Desieno, C. F., and Beaudoin, B. J., "A Guide to the Application of Capacitors Without Inductors Motor Self-Excitation," *IEEE Transactions on Power Apparatus and Systems*, vol. PAS-84, pp. 8–15, January 1965.

[B72] *Electric Utility Engineering Reference Book, Distribution Systems*, vol. 3, East Pittsburgh, PA: Westinghouse Electric Corporation, 1965.

[B73] Eliasen, A. N., "The Protection of High Inertia Drive Motors During Abnormal Starting Conditions," *IEEE Transactions on Power Apparatus and Systems*, pp. 1483–1492, July/August 1980.

[B74] Elmore, W. A., and Kramer, C. A., "Complete Motor Protection by Microprocessor Relay," Western Protective Relay Conference, Spokane, WA, October 21–23, 1986.

[B75] Farag, Sam F., Bartheld, Robert G., and May, William E., "Electronically Enhanced Low Voltage Motor Protection and Control," *IEEE Transactions on Industry Applications*, vol. 30, no. 3, May/June 1994.

[B76] Fawcett, D. V. "Electric System Design for Continuous Process Plants (Protection)," *Power*, vol. 107, pt. 7, pp. 64–68, July 1963.

[B77] Fawcett, D. V., "How to Select Overcurrent Relay Characteristics," *IEEE Transactions on Industry and General Applications*, vol. 82, pp. 94–104, May 1963.

[B78] Fawcett, D. V., "Protection of Large Three-Phase Motors," *IEEE Transactions on Industry and General Applications*, vol. IGA-3, pp. 52–55, January/February 1967.

[B79] Fawcett, D. V., "Optimize Protection for 3-Phase AC Motors," *Electrical World*, September 9, 1963.

Copyright © 2000 IEEE. All rights reserved.
Copyright The Institute of Electrical and Electronics Engineers, Inc.
Provided by IHS under license with IEEE
No reproduction or networking permitted without license from IHS
Not for Resale

[B80] Howell, J. K., “Motor Protection, Electrical and Mechanical,” e PEIA-PESA Conference, Dallas, TX, April/May 1958.

[B81] IEEE Committee Report, “Bibliography of Relay Literature, 1965-1966,” *IEEE Transactions on Power Apparatus and Systems*, vol. PAS-88, pp. 244–250, March 1969.

[B82] IEEE Report, “Transient Response of Current Transformers,” IEEE Power System Relaying Committee, July 6, 1973.

[B83] Iyer, R., Shah, N., and Zocholl, S. E., “Techniques for Evaluating Advanced Motor Protection Relays Using Computer Controlled Test Equipment,” Protective Relaying Conference, Georgia Institute of Technology, Atlanta, GA, April 29–May 1, 1987.

[B84] Khunkhun, K. J., and Butt, W. H., “Protecting Two-Speed Motors,” *Electrical World*, vol. 189, no. 8, pp. 60–62, April 15, 1978.

[B85] Koepfinger, J. L., and Khunkhun, K. J. S., “Protection of Auxiliary Power Systems in a Nuclear Power Plant,” *IEEE Transactions on Power Apparatus and Systems*, vol. PAS-98, no. 1, pp. 290–299, January/February 1979.

[B86] Lazar, I., “Protective Relaying for Motors,” *Power Engineering*, vol. 82, no. 9, pp. 66–69, September 1978.

[B87] Lazar, I., “Solid-State Motor Controls and Protection. Power Engineering,” vol. 83, no. 12, pp. 59–63, December 1979.

[B88] Mason, C. R., *The Art and Science of Protective Relaying*, New York: Wiley, 1956, Chapter 10.

[B89] Meisel, S. M., and Bandolino, J., “Design and Application of a Microprocessor-Based Motor Protection Relay with Historical Analysis for Large Motors,” Protective Relaying Conference, Georgia Institute of Technology, Atlanta, GA, April 29–May 1, 1987.

[B90] Neff, W. F., Horowitz, S. H., and Squires, R. B., “Relay Protection of Motors in Steam Power Stations with 4 kV Grounded Neutral Systems,” *AIEE Transactions on Power Apparatus and Systems*, vol. 75, pp. 573–576, August 1956.

[B91] Paoletti, Gabriel J., and Rose, A., “Improving Existing Motor Protection for Medium Voltage Motors,” *IEEE Transactions on Industry Applications*, vol. 25, no. 3, pp. 456–464, May/June 1989.

[B92] Powell, P. W., and Zocholl, S. E., “Determining Relay Settings for Motor Protection Using Published and Empirical Data,” *Proceedings of the American Power Conference*, vol. 51, pp 448–456, Illinois Institute of Technology, Research Institute, Chicago, Ill, September 1989.

[B93] Rockefeller, G. D., “Relaying CTs, A Source of Vital Information and Misinformation” Conference on Protective Relaying, Georgia Institute of Technology, Atlanta, GA, 1973

[B94] Sleeman, D. B., and Bellinger, T. F., “Pump Motor Protection Methods,” Paper CPA 62-5018, AIEE Petroleum Industry Conference, Cleveland, OH, September 1962 (discussion by D.V. Fawcett).

[B95] Shulman, J. M., Elmore, W. A., and Bailey, K. D., “Motor Starting Protection by Impedance Sensing,” *IEEE Transactions on Power Apparatus and Systems*, vol. PAS-97, no. 5, pp. 1689–1695, September/October 1978.

Copyright © 2000 IEEE. All rights reserved.

Copyright The Institute of Electrical and Electronics Engineers, Inc.
Provided by IHS under license with IEEE
No reproduction or networking permitted without license from IHS
Not for Resale

[B96] Van, C., Warrington, A. R., *Protective Relays, Their Theory and Practice*, London: Chapman and Hall, 1962, Chapter 9.

[B97] White, A. P., "Service Conditions in Motor Protection Selection," *Electrical Manufacturing*, December 1959.

[B98] Woodruf, N., "Economical Motor Protection Using Microprocessor Technology," *IEEE Transactions*, vol. IA-20, no. 5, pp. 1344–357, September/October 1984.

[B99] Zocholl, S. E., "Abnormal Starting of High Inertia Drive Motors: A Case for Rotor Thermal Protection", Conference for Protective Relaying Engineers, College Station, TX April 14–16, 1986.

B.5 Protection—thermal

[B100] Bellinger, T. F., "Running Overload Protection for Motors—Part 1," *Allis-Chalmers Engineering Review*, vol. 39, no. 2, pp. 27–31, 1974; ibid., pt 2, vol. 40, no. 1, pp. 28–31, 1975.

[B101] Boothman, D. R., Elgar, E. C., Rehder, R. H., and Woodall, R. J., "Thermal Tracking, A Rational Approach to Motor Protection," *IEEE Transactions on Power Apparatus and Systems*, vol. PAS-93, pp. 1335–1344, September/October 1974.

[B102] "Built-in Overheat Protection for 3-Phase Motors," *Electrical Manufacturing*, August 1958.

[B103] Gafford, B. N., "Thermal-Synthesis Relay is Best Replica of Motor Heating," *IEEE Transactions on Power Apparatus and Systems*, vol. 78, pp. 288–295, June 1959.

[B104] Kolb, A. F., and Thom, H. W., "Motor Protection Characteristics of Ambient Insensitive Overload Devices," *IEEE Transactions on Industry Applications*, vol. 1A-15, no. 3, pp. 303–308, May/June 1979.

[B105] Mellor, P. H., and Turner, D. R., "Real Time Prediction of Temperatures in an Induction Motor Using a Microprocessor," *Electric Machines and Power Systems*, vol. 15, no. 4–5, pp. 333–352, 1988.

[B106] Mellor, P. H., Turner, D. R., and Roberts, D., "Microprocessor Based Induction Motor Thermal Protection," *IEEE Conference Publication No. 254*, Second International Conference on Electrical Machines Design and Applications, London, England, pp. 16–20.

[B107] Moore, R. C., "Protecting Motor Windings with Thermal Detectors," *Allis-Chalmers Engineering Review*, vol. 29, no. 3, pp. 24–27, 1964.

[B108] Nailen, R. L., "Safe Locked-Rotor Time: How Safe Is It!" *IEEE Transactions on Industry and General Applications*, vol. IGA-7, pp. 708–712, November/December 1971.

[B109] Sterns, F. P., "The Case for Inherent Overheat Protection for Motors," *Electrical Manufacturing*, February 1952.

[B110] Vaughn, V. G., and White, A. P. "New Hotter Motors Demand Thermal Protection," *Electrical Manufacturing*, February 1959.

[B111] Veinott, C. G., and Schaefer, L. C. "Fundamental Theory of Inherent-Overheating Protection Under Running Overload Conditions," *AIEE Transactions*, vol. 68, pt. 1, pp. 266–272, 1949.

[B112] White, A. P., "Motor Thermal Protection, Machine Design," *The Electric Motor Book*, 1961 Edition.

Copyright © 2000 IEEE. All rights reserved.
Copyright The Institute of Electrical and Electronics Engineers, Inc.
Provided by IHS under license with IEEE
No reproduction or networking permitted without license from IHS
Not for Resale

[B113] Yeaple, F., "Which Heat Protection for the Motor," *Product Engineering*, September 2, 1960.

[B114] Zocholl, S. E., "Motor Analysis and Thermal Protection," *IEEE Transactions on Power Delivery*, vol. 5, pp. 1275–1280, July 1990.

[B115] Zocholl, S. E., Schweitzer, E. O., III., and Alianga-zegarra, A., "Thermal Protection of Induction Motors Enhanced by Interactive Electrical and Thermal Models," *AIEE Transactions on Power Apparatus and Systems*, vol. PAS-103, pp. 1749–1755, July 1984.

B.6 Protection—Fault

[B116] Bell, R. N., "Sensitive Ground Relay Protection for 6900 V Motors on a High-Resistance Grounded Chemical Plant Distribution System," *IEEE Transactions on Industry and General Applications*, vol. IGA-1, pp. 435–438, November/December 1965.

[B117] Dunki-Jacobs, J. R., "The Reality of High-Resistance Grounding," IEEE Transactions on Industry Applications, vol. IA-13, no. 5, pp. 469–475, September/October 1977.

[B118] Schmidt, R. A., "Calculation of Fault Currents for Internal Faults in AC Motors," *AIEE Transactions on Power Apparatus and Systems*, vol. 75, pp. 818–824, October 1956.

[B119] Love, D. J., "Ground Fault Protection for Electric Utility Generating Station Medium Voltage Auxiliary Power Systems," *IEEE Transactions on Power Apparatus and Systems*, vol. PAS-97, no.2, pp. 583–586, March/April 1978.

[B120] Shishkin, N. F., "Protecting AC Machines from Internal Faults in the Stator Winding," *Electrichestvo* (Russian Language), no. 10, pp. 57–59, 1958.

B.7 Protection against abnormal conditions

[B121] Armstrong, H. R., and Mulavey, J. E., "Overvoltage Protection and Maintenance Testing of AC Rotating Machines," *AIEE Transactions on Power Apparatus and Systems*, vol. 78, pp. 166–170, June 1959.

[B122] Cummings, P. G., Dunki-Jacobs, J. R., and Kerr, R. H., "Protection of Induction Motors Against Unbalanced voltage Operation," *IEEE Paper No. PCI-83-3*.

[B123] Dalasta, D. and Durand, S., "High-Speed Breaker Reclosing Can Put Abnormal Stresses on Your Motor's Power," p. 90, February 1958.

[B124] Das, J. C., "Effects of Momentary voltage Dips on the Operation of Induction and Synchronous Motors," *IEEE Transactions on Industry Applications*, vol. 26, no. 4, pp. 717–718, July/August 1992.

[B125] Gill, J. D., "Transfer of Motor Loads Between Out-of-Phase Sources," *IEEE Transactions on Industry Applications*, vol. IA-15, no. 4, pp. 376–381, July/August 1979.

[B126] Gleason, L. L., and Elmore, W. A., "Protection of Three-Phase Motors Against Single-Phase Operation," *AIEE Transactions on Power Apparatus and Systems*, vol. 77, pt. 3, pp. 1112–1120, December 1959.

[B127] Griffith, M. S., "A Penetrating Gaze at One Open Phase: Analyzing the Polyphase Induction Motor Dilemma," *IEEE Transactions on Industry Applications*, vol. IA-13, no. 6, pp. 504–517, November/December 1977.

[B128] *Industrial Power Systems Data Book*, Schenectady, N.Y.: General Electric Company.

Copyright © 2000 IEEE. All rights reserved.

Copyright The Institute of Electrical and Electronics Engineers, Inc.
Provided by IHS under license with IEEE
No reproduction or networking permitted without license from IHS
Not for Resale

[B129] Linders, J. R., "Effects of Power Supply Variations on AC Motor Characteristics," *IEEE Transactions on Industry Applications*, vol. IGA-8, pp. 383–400, July/August 1972.

[B130] "Protection Against Single-Phase Running of High- and Low-Voltage Motors," *AEG Mitteilungen* (German Language), vol. 48, pp. 101–103, February/March 1958.

[B131] Mulukutla, Sarma S., and Gulachenski, Edward M., "Critical Survey of Considerations in Maintaining Process Continuity During Voltage Dips While Protecting Motors With Reclosing and Bus—Transfer Practices," *IEEE Transactions on Power Systems*, vol. 7, no. 3, pp. 1299–1305, August 1992.

[B132] Wagner, C. F., and Evans, R. D., *Symmetrical Components*, New York: McGraw Hill.

[B133] Williams, J. E., "Operation of Three-Phase Induction Motors on Unbalanced Voltage," *AIEE Transactions on Power Apparatus and Systems*, vol. 73, pp. 125–133, April 1954.

[B134] Yerke, R. H., "Two vs. Three Running Overcurrent Units for the Protection of Three-Phase Motors," *IEEE Transactions on Power Apparatus and Systems*, Special Supplement, pp. 517–542, 1963.

B.8 Protection—surge

[B135] Colombo, E., Costa, G., Piccarreta, L. "Results of an Investigation on the Overvoltages due to a Vacuum Circuit-Breaker When Switching an H. V. Motor", *IEEE Transactions on Power Delivery*, vol. 3, no. 1, pp. 205–213, January 1988.

[B136] Dick, E. P., Gupta, B. K., Pillai, P., Narang, A., Lauber, T. S., Sharma, D. K., "Prestriking Voltages Associated with Motor Breaker Closing," *IEEE Transactions on Energy Conversion*, vol. 3, no. 4, pp. 855–863, December 1988.

[B137] Dick, E. P., Gupta, B. K., Pillai, P., Narang, A., Sharma, D. K., "Equivalent Circuits for Simulating Switching Surges at Motor Terminals," *IEEE Transactions on Energy Conversion*, vol. 3, no. 3, pp. 696–704, September 1988.

[B138] Dick, E. P., Gupta, B. K., Pillai, P., Narang, A., Sharma, D. K., "Practical Calculation of Switching Surges at Motor Terminals", *IEEE Transactions on Energy Conversion*, vol. 3, no. 4, pp. 864–872, with W. G. correspondence, December 1988.

[B139] Gupta, B. K., Lloyd, B. A., Stone, G. C., Sharma, D. K., Fitzgerald, J. P., "Turn Insulation Capability of Large AC Motors, Part 2—Impulse Strength", *IEEE Transactions*, vol. EC-2, no. 4, pp. 666–673, December 1987.

[B140] Gupta, B. K., Lloyd, B. A., Stone, G. C., Sharma, D. K., Nilsson, N. E., Fitzgerald, J. P "Turn Insulation Capability of Large AC Motors, Part 3—Insulation Coordination," *IEEE Transactions*, vol. EC-2, no. 4, pp. 674–679, December 1987.

[B141] Gupta, B.K., Sharma, D.K., Bacvarov, D.C., "Measured Propagation of Surges in the Winding of a Large A-C Motor," *IEEE Transactions*, vol. EC-1, no. 1, pp. 122-128, March 1986.

[B142] McLaren, P. G., and Abdel-Rahman, M. H., "Steep Fronted Surges Applied to Large A C Motors—Effect of Surge Capacitor Value and Lead Length," *IEEE Transactions on Power Delivery*, vol. 3, no. 3, pp. 990–997, July 1988.

Copyright © 2000 IEEE. All rights reserved.
Copyright The Institute of Electrical and Electronics Engineers, Inc.
Provided by IHS under license with IEEE
No reproduction or networking permitted without license from IHS
Not for Resale

[B143] Reckleff, J. G., Fromholtz, E. N., Musil, R. J., Wenger, S., "Measurements of Fast Rise-Time Transients Switching Large 13.2 kV Motors," *IEEE Transactions on Power Delivery*, vol. 3, no. 3, pp. 1022–1028, July 1988.

[B144] Reckleff, J. G., Nelson, J. K., Musil, R. J., Wenger, S., "Characterization of Fast Rise-Time Transients When Energizing Large 13.2 kV Motors," *IEEE Transactions on Power Delivery*, vol. 3, no. 2, pp. 627–636, April 1988.

[B145] Tempelaar, H. G., "Determination of Transient Overvoltages Caused by Switching of High Voltage Motors," *IEEE Transactions on Energy Conversion*, vol. 3, no. 4, pp. 806–814, December 1988.

B.9 Miscellaneous—bearings, capacitors, bus transfer, etc.

[B146] Backer, L. E., Barth, P., Huse, R. A., and Taylor, D. W., "Transfer Tests on Station Auxiliary Busses," *AIEE Transactions on Power Apparatus and Systems*, vol. 74, pp. 1441–1449, February 1956.

[B147] Buchanan, W., "Shaft Currents in Electric Machines," *Electrician* (London), vol. 75, pp. 226–267, May 28, 1915.

[B148] Davies, E. J., "An Experimental and Theoretical Study of Eddy-Current Couplings and Brakes," *IEEE Transactions on Power Apparatus and Systems*, vol. 82, pp. 401–419, August 1963.

[B149] Sidway, C. L., and Conner, J. E., "Effect of Overvoltages and Surges on Machine Insulation," *AIEE Transactions on Power Apparatus and Systems*, vol. 73, pp. 799–809, August 1954.

[B150] Eschmann, Hasbargen, and Weigand. *Ball and Roller Bearings, Their Theory, Design, and Application*, Munich: R. Oldenbourg, 1958.

[B151] Hauck, T. A. "Motor Reclosing and Bus Transfer in Electric Utility Service," American Power Conference, Chicago, IL, 1971.

[B152] IEEE 100-1996, The IEEE Standard Dictionary of Electrical and Electronics Terms, Sixth Edition.

[B153] Jackson, D. W., "Analysis of Surge Capacitor Lead Connections for Protection of Motors," *IEEE Transactions on Power Apparatus and Systems*, pp. 2605–2611, September 1984.

[B154] Kelly, A. R., "Relay Response to Motor Residual Voltage During Automatic Transfers," *AIEE Transactions on Industry and General Applications*, vol. 74, pp. 245–250, September 1955.

[B155] Lewis, D. G. and Marsh, W. D., "Transfer of Steam Electric Generating Station Busses," *AIEE Transactions on Power Apparatus and Systems*, vol. 74, pp. 322–334, June 1955.

[B156] Molle, J., Shidshakly, R. W., and Fawcett, D. V., "Air-Purged Electric Systems for a Large Compressor Building Having Group B, Division 2 Classifications," *IEEE Transactions on Industry and General Applications*, vol. 83, pp. 209–215, July 1964.

[B157] Olson, O. A., "Shaft Currents in AC Machinery. Power Generation,", p. 102, November 1949.

[B158] Paulus, C. F., and Green, D. R., "Proper Motor Application Engineering Can Reduce Costs and Improve Reliability," *AIEE Transactions on Power Apparatus and Systems*, vol. 81, pp. 886–891, February 1963.

Copyright © 2000 IEEE. All rights reserved.

Copyright The Institute of Electrical and Electronics Engineers, Inc.
Provided by IHS under license with IEEE
No reproduction or networking permitted without license from IHS
Not for Resale

[B159] Ramsaur, O., “Performance of Overcurrent Relays on Cold Load Restoration,” *PEA Relay Committee Proceedings*, 1952.

[B160] Walsh, G. F., “The Effects of Reclosing on Industrial Plants,” *Proceedings of the American Power Conference*, vol. 23, pp. 658–778, 1961.

[B161] Young, C. C., and Dunki-Jacobs, J., “The Concept of In-Phase Transfer Applied to Industrial Systems Serving Essential Service Motors,” *AIEE Transactions on Industry and General Applications*, vol. 79, pp. 508–518, January 1961.

Copyright © 2000 IEEE. All rights reserved.
Copyright The Institute of Electrical and Electronics Engineers, Inc.
Provided by IHS under license with IEEE
No reproduction or networking permitted without license from IHS
Not for Resale