IEEE Std C37.95™-2002
(Revision of IEEE Std C37.95-1989)

IEEE Standards

C37.95™

IEEE Guide for Protective Relaying of Utility-Consumer Interconnections

IEEE Power Engineering Society

Sponsored by the
Power System Relaying Committee

IEEE

Published by
The Institute of Electrical and Electronics Engineers, Inc.
3 Park Avenue, New York, NY 10016-5997, USA

17 April 2003

Print: SH95075
PDF: SS95075

Copyright The Institute of Electrical and Electronics Engineers, Inc.
Provided by IHS under license with IEEE
No reproduction or networking permitted without license from IHS

Not for Resale

IEEE Std C37.95™-2002
(Revision of IEEE Std C37.95™-1989)

IEEE Guide for Protective Relaying of Utility-Consumer Interconnections

Sponsor

Power System Relaying Committee
of the
IEEE Power Engineering Society

Approved 11 December 2002

IEEE-SA Standards Board

Abstract: Protective relay applications involving electric service to consumers that requires a transformation between the utility's supply voltage and the consumer's utilization voltage are covered in this guide. This guide describes the factors that need to be considered in the design of adequate protection facilities, outlines modern relay practices, and provides several examples of the protection of typical utility-consumer interconnections.
Keywords: backup protection, breaker-failure relaying, bus protection, electric service, non-utility generation, protective relays, transformer protection, utility-consumer interconnection

The Institute of Electrical and Electronics Engineers, Inc.
3 Park Avenue, New York, NY 10016-5997, USA

Copyright © 2003 by the Institute of Electrical and Electronics Engineers, Inc.
All rights reserved. Published 17 April 2003. Printed in the United States of America.

Print: ISBN 0-7381-3515-1 SH95075
PDF: ISBN 0-7381-3516-X SS95075

No part of this publication may be reproduced in any form, in an electronic retrieval system or otherwise, without the prior written permission of the publisher.

IEEE is a registered trademark in the U.S. Patent and Trademark Office, owned by the Institute of Electrical and Electronics Engineers, Inc.

National Electric Code and NEC are both registered trademarks of the National Fire Protection Association, Inc.

Copyright The Institute of Electrical and Electronics Engineers, Inc.
Provided by IHS under license with IEEE
No reproduction or networking permitted without license from IHS
Not for Resale

IEEE Standards documents are developed within the IEEE Societies and the Standards Coordinating Committees of the IEEE Standards Association (IEEE-SA) Standards Board. The IEEE develops its standards through a consensus development process, approved by the American National Standards Institute, which brings together volunteers representing varied viewpoints and interests to achieve the final product. Volunteers are not necessarily members of the Institute and serve without compensation. While the IEEE administers the process and establishes rules to promote fairness in the consensus development process, the IEEE does not independently evaluate, test, or verify the accuracy of any of the information contained in its standards.

Use of an IEEE Standard is wholly voluntary. The IEEE disclaims liability for any personal injury, property or other damage, of any nature whatsoever, whether special, indirect, consequential, or compensatory, directly or indirectly resulting from the publication, use of, or reliance upon this, or any other IEEE Standard document.

The IEEE does not warrant or represent the accuracy or content of the material contained herein, and expressly disclaims any express or implied warranty, including any implied warranty of merchantability or fitness for a specific purpose, or that the use of the material contained herein is free from patent infringement. IEEE Standards documents are supplied "**AS IS**."

The existence of an IEEE Standard does not imply that there are no other ways to produce, test, measure, purchase, market, or provide other goods and services related to the scope of the IEEE Standard. Furthermore, the viewpoint expressed at the time a standard is approved and issued is subject to change brought about through developments in the state of the art and comments received from users of the standard. Every IEEE Standard is subjected to review at least every five years for revision or reaffirmation. When a document is more than five years old and has not been reaffirmed, it is reasonable to conclude that its contents, although still of some value, do not wholly reflect the present state of the art. Users are cautioned to check to determine that they have the latest edition of any IEEE Standard.

In publishing and making this document available, the IEEE is not suggesting or rendering professional or other services for, or on behalf of, any person or entity. Nor is the IEEE undertaking to perform any duty owed by any other person or entity to another. Any person utilizing this, and any other IEEE Standards document, should rely upon the advice of a competent professional in determining the exercise of reasonable care in any given circumstances.

Interpretations: Occasionally questions may arise regarding the meaning of portions of standards as they relate to specific applications. When the need for interpretations is brought to the attention of IEEE, the Institute will initiate action to prepare appropriate responses. Since IEEE Standards represent a consensus of concerned interests, it is important to ensure that any interpretation has also received the concurrence of a balance of interests. For this reason, IEEE and the members of its societies and Standards Coordinating Committees are not able to provide an instant response to interpretation requests except in those cases where the matter has previously received formal consideration.

Comments for revision of IEEE Standards are welcome from any interested party, regardless of membership affiliation with IEEE. Suggestions for changes in documents should be in the form of a proposed change of text, together with appropriate supporting comments. Comments on standards and requests for interpretations should be addressed to:

Secretary, IEEE-SA Standards Board
445 Hoes Lane
P.O. Box 1331
Piscataway, NJ 08855-1331
USA

Note: Attention is called to the possibility that implementation of this standard may require use of subject matter covered by patent rights. By publication of this standard, no position is taken with respect to the existence or validity of any patent rights in connection therewith. The IEEE shall not be responsible for identifying patents for which a license may be required by an IEEE standard or for conducting inquiries into the legal validity or scope of those patents that are brought to its attention.

Authorization to photocopy portions of any individual standard for internal or personal use is granted by the Institute of Electrical and Electronics Engineers, Inc., provided that the appropriate fee is paid to Copyright Clearance Center. To arrange for payment of licensing fee, please contact Copyright Clearance Center, Customer Service, 222 Rosewood Drive, Danvers, MA 01923 USA; +1 978 750 8400. Permission to photocopy portions of any individual standard for educational classroom use can also be obtained through the Copyright Clearance Center.

--`,,`-`-`,,`,,`,`,,`---

Copyright The Institute of Electrical and Electronics Engineers, Inc.
Provided by IHS under license with IEEE
No reproduction or networking permitted without license from IHS

Not for Resale

Introduction

(This introduction is not part of IEEE Std C37.95-2002, IEEE Guide for Protective Relaying of Utility-Consumer Interconnections.)

This guide is intended to assist engineers in the application of protective relays at the interface between the utility and consumer systems, where there is transformation between the utility's supply voltage and the consumer's utilization voltage. As a practical matter, this guide applies principally to larger commercial and industrial supply facilities, since it deals primarily with systems above 600 volts. It is a revision of IEEE Std C37.95™-1989, IEEE Guide for the Protective Relaying of Utility-Consumer Interconnections. This guide has been updated to reflect current practices, advances in technology, and the impact of non-utility generation on the utility-consumer interconnection.

Participants

At the time this guide was completed, the Working Group for the Protective Relaying of Utility-Consumer Interconnections had the following membership:

I. O. Hasenwinkle, *Chair*
F. O. Griffin, *Vice Chair*

A. N. Darlington	K. J. Khunkhun	D. C. Reckerd
D. J. Finley	A. P. Napikoski	T. L. Seegers
C. F. Henville	F. P. Plumptre	J. E. Stephens

The following members of the balloting committee voted on this guide. Balloters may have voted for approval, disapproval, or abstention.

John Appleyard	Roy E. Hart	John G. Reckleff
Michael P. Baldwin	Irwin O. Hasenwinkle	Mohindar S. Sachdev
Robert W. Beckwith	Roger A. Hedding	Miriam P. Sanders
Kenneth Behrendt	Charles F. Henville	Tony L. Seegers
Stuart H. Bouchey	Jerry W. Hohn	Tarlochan Sidhu
John Boyle	John J. Horwath	Mark S. Simon
Mark Carpenter	James D. Huddleston, III	Peter A. Solanics
Simon R. Chano	James W. Ingleson	James E. Stephens
Stephen P. Conrad	K. J. Khunkhun	James E. Stoner
Albert N. Darlington	William J. Marsh, Jr.	William M. Strang
Douglas C. Dawson	Michael J. McDonald	Charles R. Sufana
Clifford Downs	Jeffrey L. McElray, Sr.	Malcolm J. Swanson
Walter Elmore	Gary L. Michel	Richard P. Taylor
Ahmed Elneweihi	George R. Nail	Demetrios Tziouvaras
W. E. Feero	Bradley D. Nelson	Joe T. Uchiyama
Jonathan D. Gardell	Stig L. Nilsson	Eric A. Udren
Jeffrey G. Gilbert	George C. Parr	Charles L. Wagner
Luis C. Gonzalez	C. A. Petrizzo	William P. Waudby
John Kenneth Greene	Robert D. Pettigrew	Ronald M. Westfall
Stephen. E. Grier	Alan C. Pierce	David J. Zaprazny
E. A. Guro	Frank P. Plumptre	John A. Zipp
Robert W. Haas	Roger E. Ray	Stan Zocholl
Robert E. Hall		John A. Zulaski

Copyright © 2003 IEEE. All rights reserved.

Copyright The Institute of Electrical and Electronics Engineers, Inc.
Provided by IHS under license with IEEE
No reproduction or networking permitted without license from IHS
Not for Resale

When the IEEE-SA Standards Board approved this guide on 11 December 2002, it had the following membership:

James T. Carlo, *Chair*
James H. Gurney, *Vice Chair*
Judith Gorman, *Secretary*

Sid Bennett
H. Stephen Berger
Clyde R. Camp
Richard DeBlasio
Harold E. Epstein
Julian Forster*
Howard M. Frazier
Toshio Fukuda
Arnold M. Greenspan
James H. Gurney
Raymond Hapeman
Donald M. Heirman
Richard H. Hulett
Lowell G. Johnson
Joseph L. Koepfinger*
Peter H. Lips
Nader Mehravari
Daleep C. Mohla
Willaim J. Moylan
Malcolm V. Thaden
Geoffrey O. Thompson
Howard L. Wolfman
Don Wright

*Member Emeritus

Also included are the following nonvoting IEEE-SA Standards Board liaisons:

Alan Cookson, *NIST Representative*
Satish K. Aggarwal, *NRC Representative*

Savoula Amanatidis
IEEE Standards Managing Editor

Copyright © 2003 IEEE. All rights reserved.

Copyright The Institute of Electrical and Electronics Engineers, Inc.
Provided by IHS under license with IEEE
No reproduction or networking permitted without license from IHS
Not for Resale

Contents

1. Overview 1

1.1 Scope 1
1.2 Purpose 1

2. References 2

3. Establishing consumer service requirements and supply methods 2

3.1 Interconnection 2
3.2 General design approach 2
3.3 Information exchange 3
3.4 Specific supply considerations 4

4. Typical utility-consumer interconnection configurations 8

4.1 Single supply-single transformer 8
4.2 Dual supply-single transformer 11
4.3 Dual supply-dual transformer 13

5. Brief review of protection theory 16

5.1 Protection system design considerations 16
5.2 Protection systems overview 18

6. System studies 24

6.1 Types of studies 24
6.2 Required data 25
6.3 Performance of studies 25

7. Interconnection examples 25

7.1 Single supply from a remote utility substation 25
7.2 Dual supply from a remote utility substation, single-transformer configuration 28
7.3 Dual supply from a remote utility substation, dual-transformer configuration 31
7.4 Dual supply from a remote utility substation, dual-circuit-switcher, and transformer configuration 34
7.5 Supply to a remote nonutility substation with generation 38

Annex A (informative) Bibliography 42

Copyright © 2003 IEEE. All rights reserved.

Copyright The Institute of Electrical and Electronics Engineers, Inc.
Provided by IHS under license with IEEE
No reproduction or networking permitted without license from IHS
Not for Resale

Copyright The Institute of Electrical and Electronics Engineers, Inc.
Provided by IHS under license with IEEE
No reproduction or networking permitted without license from IHS

Not for Resale

IEEE Guide for Protective Relaying of Utility-Consumer Interconnections

1. Overview

The point at which the equipment used to provide electrical service to a consumer changes ownership is usually referred to as the *interconnection*. However, it is important to remember that the physical laws of nature, which govern the behavior of electric power systems, apply across ownership boundaries. For a well-engineered interconnection, therefore, the electric power system protection should be studied and analyzed critically without regard to ownership.

From the viewpoint of service reliability and service continuity, it is emphasized that the best-conceived and best-implemented protective relaying system is no substitute for an adequately designed power system. Similarly, inadequately applied protective relaying will contribute to unsatisfactory performance of an otherwise well-designed power system. In considering a new installation, or changes to an existing arrangement, it is very important that protective relaying and safety be given careful attention in the early stages of planning.

1.1 Scope

This guide contains information on a number of different protective relaying practices for the utility-consumer interconnection. It is intended to cover applications involving service to a consumer that normally requires a transformation between the utility's supply voltage and the consumer's utilization voltage. Interconnections supplied at the utilization voltage are not covered.

This guide is not intended to supplant specific utility or consumer practices, procedures, requirements, or any contractual agreement between the utility and the consumer. The examples in Clause 7 are used for illustrative purposes only and do not necessarily represent the preferred protection under all conditions.

This guide addresses consumers, with or without generation, that are connected to utility subtransmission or transmission circuits. The specific control schemes associated with generation are not addressed. It is not intended to apply necessarily to consumer generation connected to utility distribution circuits.

1.2 Purpose

The primary purpose of this guide is to help those who are responsible for the application of protective relaying for the electrical interconnection between utility and consumer systems. It is anticipated that representatives of the utility, the consumer, and their consultants who are responsible for the specification, design, and operation of the interconnection will use this guide. Recognizing the diverse audience being

Copyright © 2003 IEEE. All rights reserved.

Copyright The Institute of Electrical and Electronics Engineers, Inc.
Provided by IHS under license with IEEE
No reproduction or networking permitted without license from IHS
Not for Resale

addressed, background information is included in a bibliography to direct the reader to more complete treatment of the material.

2. References

This guide shall be used in conjunction with the following publications. When the following publications are superseded by an approved revision, the revision shall apply.

IEEE Std C37.2™-1996 (Reaff 2001), IEEE Standard Electrical Power System Device Function Numbers and Contact Designations.[1,2]

IEEE Std 315™-1975 (Reaff 1993), IEEE Standard Graphic Symbols for Electrical and Electronics Diagrams.

3. Establishing consumer service requirements and supply methods

3.1 Interconnection

The utility-consumer interconnection provides the path for power flow between supplier (utility) and user (consumer). The interconnection may comprise one or more circuits and is assumed to include voltage transformation. For the purposes of this guide, the interconnection extends from the nearest source-side protective device used for switching on the transformer high-voltage side to the transformer low-side bus and switching devices.

3.2 General design approach

The supply that is selected should satisfy the consumer's load requirements. Available utility supply options in the area as well as the utility's design standards and operation and maintenance practices should also be considered.

3.2.1 Consumer's load requirements

Prior to meeting with utility personnel, the consumer should define the present and future load requirements, including the connected kVA, the average load, and peak demand power requirements (both real and reactive). The effect of interruptions and voltage dips on plant operation, the required dependability and security of the utility's electrical service, and any other needs that may be unique to the operation should be determined. The consumer's engineer should be prepared to discuss these requirements in detail with utility engineers to ensure that there is a clear understanding of the consumer's requirements.

3.2.2 Utility service availability

The utility should describe the supply voltages available in the area and estimate the initial and total costs of the various alternatives. Most utilities establish nominal limits on the load that can be supplied at different voltage levels. The number of utility supply lines available and the performance level of each line should be discussed in detail. In addition, the utility should inform the consumer of any required studies, unusual

[1]The IEEE standards or products referred to in this clause are trademarks of the Institute of Electrical and Electronics Engineers, Inc.

[2]IEEE publications are available from the Institute of Electrical and Electronics Engineers, 445 Hoes Lane, P.O. Box 1331, Piscataway, NJ 08855-1331, USA (http://standards.ieee.org/).

Copyright © 2003 IEEE. All rights reserved.
Copyright The Institute of Electrical and Electronics Engineers, Inc.
Provided by IHS under license with IEEE
No reproduction or networking permitted without license from IHS
Not for Resale

problems, or future plans that may affect the quality or continuity of service. Some utilities publish standard information booklets detailing the requirements for service.

When the consumer has identified critical power requirements, the utility engineer should investigate these requirements and be certain that both parties have a clear understanding of the effect of interruptions and voltage dips. The utility may then be able to suggest a supply system that will meet these requirements, or suggest plant control changes to make the operation more successful.

3.3 Information exchange

Once the supply method is established, a further exchange of information is required so that the station design can be completed and the utility can make the necessary preparations to supply the service. By establishing good communication between the utility and the consumer as early as possible, specific requirements for either a new or modified supply can be identified and included in the initial design before equipment is ordered.

3.3.1 Typical information furnished by utility

a) Available utility short-circuit current, including values for normal and alternate supply facilities, as well as any anticipated future values (i.e., range of single and three phase-to-ground fault currents, and associated X/R ratios, at the consumer's point of service)
b) Expected minimum, maximum, and nominal voltage at the consumer's point of service for available voltage levels
c) Outage history of the supply, including both forced and maintenance outages
d) Estimated frequency, duration, and magnitude of momentary voltage dips at the consumer's point of service
e) Operating requirements and restraints
f) Specific protection requirements to coordinate with the utility system
g) Specific reclosing practices on both normal and alternate supply facilities
h) Harmonic content, voltage fluctuation, and current unbalance limits imposed by the utility
i) Estimates of voltage harmonic distortion and harmonic current injection from other sources on the utility system, if requested by the consumer
j) Load shedding requirements
k) Additional information requested by the consumer, such as
    1) Supply line construction and routing
    2) Supply substation arrangement and location
    3) Utility grounding and lightning protection practices
    4) Metering arrangements and data

3.3.2 Typical information furnished by consumer

a) Expected service date (when consumer will be ready for power)
b) Complete one-line and three-line diagrams of plant distribution system
c) Preferred supply voltage
d) Transformer ratings, connections, voltage taps, and impedances
e) Power factor correction capacitor ratings and connections
f) Available short-circuit current from the consumer at the point of service based on the procedures outlined in IEEE Std 141™-1993 [B9][3]
g) Switchgear specifications, including protective relay types and ranges
h) Motor loads, types, sizes, starting current, contactor data, and frequency of starts
i) Unusual load characteristics, such as those due to furnaces, thyristors, and other nonlinear loads

[3]The numbers in brackets correspond to those of the bibliography in Annex A.

--`,,`-`-`,,`,,`,`,,`---
Copyright © 2003 IEEE. All rights reserved.

Copyright The Institute of Electrical and Electronics Engineers, Inc.
Provided by IHS under license with IEEE
No reproduction or networking permitted without license from IHS Not for Resale

j) Generator and large synchronous motor information, including ratings, impedance data, time constants, and exciter data
k) Voltage balance requirements
l) Protection and control schematic drawings, as appropriate
m) Point of interconnection physical arrangement drawings
n) Expansion plans, which include projected loads, future substation development, and estimated dates
o) Station ground grid design
p) Method used to ground neutrals and ratings of the neutral grounding device
q) Qualifications of the consumer's maintenance personnel

3.3.3 Future utility system changes

The utility should inform the consumer of any substantial utility system changes. For example, the installation of a large transformer that alters short-circuit currents at the supply point may affect the consumer's power system.

3.4 Specific supply considerations

In determining the final supply method, consideration should be given to the design of the interconnection, the arrangement of the utility's supply system, its protective relaying requirements, and its maintenance requirements and responsibilities.

3.4.1 Division of ownership

Individual operating and maintenance philosophies of the consumer and utility may impact electric system design. Regardless of ownership, however, the protective equipment should be specified and designed to provide a coordinated system. Proper engineering design must not be compromised, but the protection of the utility-consumer interconnection facilities should satisfy the objectives of both parties. In all cases, the protection requirements, equipment specifications, relay settings, fuse ratings, station battery requirements, and testing procedures should be discussed and agreed on by both parties.

3.4.2 Supply line reliability

Line length, construction, fault clearing times, and utility transmission system configuration all affect the supply line reliability. Reliability requirements should be determined based on both long-term and momentary outages.

3.4.2.1 Long-term outages

Long-term outages result from equipment failures that require an extended time to repair or replace. If a utility-consumer interconnection consists of a single line supplied from a single source connected to a single transformer, it is subject to long-term interruptions due to forced or planned outages of the supply source, line, or transformer. To reduce the possibility of long-term outages, a second supply line may be considered. This can, for example, be provided by

a) Two lines from separate utility sources
b) Two lines derived by sectionalizing an existing utility tie line

Continuity of service will be further enhanced by the addition of a second transformer. The service to the consumer can be arranged so that it is normally provided by one source with standby supply from the second. This enables restoration of service by automatic or manual switching operations upon the failure of the principal source of supply. Another alternative is parallel operation with two full-capacity lines and transformers. These and other supply configurations are covered in detail in Clause 4.

Copyright © 2003 IEEE. All rights reserved.
Copyright The Institute of Electrical and Electronics Engineers, Inc.
Provided by IHS under license with IEEE
No reproduction or networking permitted without license from IHS Not for Resale

3.4.2.2 Momentary outages and voltage dips

Momentary outages are generally caused by a trip of the supply line to the customer that is quickly returned to service either by a successful auto-reclosing of the line or by automatically switching to an alternative source. Depending on the customer's process equipment, this interruption may cause a plant shut down even with high-speed restoration.

Voltage dips are caused by faults on the utility system that do not result in an outage to the customer. The fault location, type of fault, system configuration, connections of the service transformer, and the customer load influence the magnitude of these voltage dips.

It should be recognized that there is no electrical utility supply method that completely eliminates the possibility of momentary service interruptions or voltage dips. The primary cause of service complaints is the failure to adequately evaluate the effect of interruptions and voltage dips on the consumer's equipment. Depending on the type of operation, a severe dip can be very costly because it can disrupt an industrial process. It is especially critical that the consumer make a careful evaluation of the voltage requirements of sensitive loads and the electronic systems that provide process control. Curves describing voltage versus time tolerances can be used to determine the maximum allowable delay for outages or dips. The ITI (CBEMA) curve [B13], for example, describes typical supply voltage variations that can be tolerated by most information technology equipment without any interruption in function. In many instances, special means can be used to make the loads tolerant of unavoidable voltage conditions on the power system. In other cases, it may be necessary to install uninterruptible power supplies or other equipment to allow plant facilities to ride through these periods.

3.4.3 Interconnection protection requirements

The complexity of the protection used at an interconnection will vary depending on voltage level, system configuration, the type and amount of consumer load, and specific requirements of either the consumer or utility. In a dual supply system, for example, additional relaying may be required to respond to undesirable power flow from one supply to the other. Special consideration must also be given to consumers with large motors or generators.

3.4.4 Maintenance

In designing the interconnection system and associated protective equipment, it should be recognized that periodic maintenance of all facilities is required. Documentation for the equipment to be tested should provide sufficient information to the test personnel so they have a clear understanding of the intent of each protective system. The design should include test blocks and isolation devices to allow relay calibration using an external source for inputs to the protection and for making in-service measurements of all input quantities to the relay from instrument transformers. Critical relay outputs should be available for measurement. In those instances where communication channels are used in conjunction with protective systems, the design of the communication should be coordinated to assure that

a) There is agreement on nomenclature for test and isolation facilities so that a request to isolate a facility or to initiate a signal is understood by utility and consumer personnel.
b) Test switch and isolation devices are provided so appropriate signals can be transmitted and measured on the channel under test.

During periods of maintenance, the reliability of the supply or possibly even the continuity of service may be affected. This work should be coordinated between the utility and the consumer to minimize any adverse impact. If the consumer cannot tolerate the loss of service for periodic maintenance, the installation of an alternative supply is required.

Copyright © 2003 IEEE. All rights reserved.

Copyright The Institute of Electrical and Electronics Engineers, Inc.
Provided by IHS under license with IEEE
No reproduction or networking permitted without license from IHS Not for Resale

3.4.5 Load considerations

The primary concerns in applying protection for faults on the electrical supply systems are to maintain system integrity and minimize equipment damage. However, the effect of the protective equipment on the load served should also be considered. For example, the operating time of fuses or protective relays and switching devices determines the time to isolate a faulted piece of equipment. As discussed in 3.4.2.2, during a fault, an electric system is subjected to voltage dips on the unfaulted portions of the system. Extended clearing times can aggravate the adverse effect that these dips have on the operation of process controls, ac contactors, motors, computers, and other electronic devices.

Other considerations include the reclosing practices of the utility. Automatic reclosing can provide prompt restoration of service following a temporary fault, or to a portion of the system once a permanently faulted section has been isolated. The consequences of reclosing may be detrimental, however, if the consumer's system includes generators or large motors. It is essential that the implications be understood and that designs be selected to meet the required objectives.

3.4.6 Harmonics

Harmonics can be generated in an electric system by numerous devices. The consumer must be cognizant of the effect of harmonics on the plant equipment and the utility system (see IEEE Std 519™-1992 [B12]). Limits may be imposed on the acceptable level of harmonics, beyond which corrective action should be taken. The effect of capacitors should also be considered. Capacitors do not create harmonics but can cause a change in distribution of harmonic levels throughout the system. This may increase in harmonic voltages on the system that may not necessarily be at the location of the capacitor or the source of harmonics. It may be desirable, as part of the joint utility-consumer checkout of interconnection facilities, to measure and document harmonics present in the bus voltage before and after applying load to the station. The harmonic content of the load current should also be recorded.

3.4.7 Grounding

The utility and the consumer normally construct station ground grids as required by ANSI C2-2002 [B1] and recommended in IEEE Std 80™-2000 [B7]. Where these two grids are located close together, they are generally connected together at a minimum of two points. Where some distance physically separates the stations, connecting the ground grids is neither practical nor necessary. However, consideration should be given to the difference in ground potential that may exist during faults and its affect on any low-voltage circuits connecting equipment located in the utility station to equipment in the customer facility (such as instrument transformer secondary circuits, dc control circuits, station service circuits, communication circuits, or load management control circuits). If the consumer and utility grounds are not interconnected, these low-voltage circuits need to be properly treated to avoid possible equipment damage and personnel hazards due to the transferred potential. For additional information, see IEEE Std 80-2000 [B7].

The method of system neutral grounding employed by the consumer may differ from that used by the utility. Some consumers prefer to employ resistance grounding. Neutral grounding should be discussed, and an agreement should be reached on the practice to be followed and on important concerns such as ground relay settings and surge arrester ratings.

3.4.8 Ferroresonance

Ferroresonance can occur when capacitance is excited in series with nonlinear inductance and is a phenomenon that can produce severe overvoltages on the system. Normally, ferroresonance is not present but may occur as a result of a switching operation. For example, ferroresonance can occur when a single-phase switch is opened on a length of cable or transmission line that is terminated by a lightly loaded transformer. Ferroresonance can also occur when a weak source is isolated together with a lightly loaded feeder containing power factor correction capacitors. Ferroresonance cannot always be avoided, but steps can be taken to reduce the

Copyright © 2003 IEEE. All rights reserved.
Copyright The Institute of Electrical and Electronics Engineers, Inc.
Provided by IHS under license with IEEE
No reproduction or networking permitted without license from IHS
Not for Resale

probability of its occurrence, such as locating switches and fuses close to transformers, use of Y-grounded transformer connections, three-phase switching, and using high-speed voltage and frequency sensors to isolate consumer generation. For further discussion of ferroresonance, see IEEE Std C57.105™-1978 [B6].

3.4.9 Voltage considerations

The utility electric supply voltage may be regulated or unregulated. In general, service from a distribution system will be a regulated supply, whereas service from a transmission or subtransmission system will be unregulated. Consumer substations served by unregulated systems may require compensation for the variations in supply voltage and for voltage drop caused by load changes. The method of compensation can be by load-tap changing transformers or by switched capacitors.

Flicker is defined as the rapid change in voltage produced by arc furnaces, welders, and other pulsating irregular loads. In these cases, there is concern for both the magnitude of the voltage change and the frequency of occurrence. Limits of operation are normally specified by the utility for flicker-producing loads, and these may require the installation of facilities designed to limit the voltage variation.

3.4.10 Phase balance considerations

Power is normally supplied and consumed in a balanced set of three phases. When the balance is upset, either on the supply or on the consumption side, the resulting asymmetry can cause problems. Utilities and consumers should consider the effect of unbalances on their systems, especially under weak source conditions.

Balance can be upset from the supply side by operation of single-phase interrupting devices, such as power fuses or automatic-circuit reclosers. More infrequently, unbalance can result from the misoperation of a device that normally operates in a three-phase mode. For instance, one pole of a three-phase circuit breaker may fail to open or close at the same time as the other two. Consumers should consider the effect of unbalanced supply and ensure that their equipment and processes are properly protected in the presence of such unbalance. Motors and generators are commonly protected by the application of single-phasing protection or negative phase sequence protection. Overvoltage protection may also be required if there is a possibility that ferroresonant conditions may arise as the result of the unbalanced supply.

Balance can also be upset from the consumer’s side. The most common cause is unbalanced load. Unbalanced load may be the natural characteristic of some types of load such as electric railway systems, or it may also result from the operation of single-phase protective devices. If the amount of unbalanced load is significant, it can result in unbalanced voltages on the utility supply system, which may cause problems for other customers, or for sensitive protection on that system. Negative sequence polarized directional relays, for example, may respond to negative phase sequence voltages as low as a few percent of the nominal system voltage.

3.4.11 Transformer connection

Transformers are commonly connected in a delta-wye configuration when the interconnection with the utility occurs at transmission or subtransmission voltages. The high-voltage delta winding will minimize third harmonic voltages and, with the secondary neutral grounded, will circulate and trap zero-sequence current for faults on the low side. This isolates the utility ground relays from ground faults on the customer side. This is important because it allows the utility to maintain sensitivity and speed in clearing high-voltage ground faults. The wye connection on the low side provides the consumer with a location for a good ground. The delta winding helps to balance the phases on the wye side, which makes it more tolerant of unbalanced load. As discussed in 6.1, however, transformers with delta-connected, high-voltage windings can introduce system problems where there are synchronous motor loads or generators connected to the low-voltage side.

Copyright © 2003 IEEE. All rights reserved.

Copyright The Institute of Electrical and Electronics Engineers, Inc.
Provided by IHS under license with IEEE
No reproduction or networking permitted without license from IHS Not for Resale

Consumer transformer connections that are a source of ground fault current on the utility's system (e.g., with the high-voltage connected grounded-wye and the low-voltage delta) are, in many instances, unacceptable. For example, when this type of transformer is tapped to a utility transmission line, it decreases the ground fault current contribution from the utility and makes it more difficult to detect ground faults on all portions of the line. If it is necessary to use these transformers, such as when the consumer has generation, it may also be necessary to employ high-voltage breakers to ensure proper protection of the transmission lines.

4. Typical utility-consumer interconnection configurations

In the typical service arrangements that follow, such aspects as dependability, security, and ease of maintenance range from minimal to optimal. The consumer load requirements will strongly influence the degree to which each of these aspects is considered. Protective relaying systems for certain selected examples are described in detail in Clause 7 of this guide. Note that this is only a limited selection used to illustrate the principles discussed in this guide and that numerous other service arrangements are in general use.

4.1 Single supply-single transformer

This is a common form of utility-consumer interconnection. It consists of a single transformer connected to a single source. The consumer will generally have multiple feeders connected to the low-voltage side of the transformer. Supply from this configuration is subject to interruption upon loss of the supply source, line, or transformer.

Figure 1 is a basic single supply-single transformer interconnection. The high-side fuse provides protection for transformer primary and secondary side faults, as well as backup protection for low-side feeder circuits. Protective relays on the supply source breaker will protect for line faults and provide limited backup protection for the high-side fuse. A consumer power outage will be necessary if maintenance is required on any of the system components other than the consumer feeder devices.

Copyright © 2003 IEEE. All rights reserved.
Copyright The Institute of Electrical and Electronics Engineers, Inc.
Provided by IHS under license with IEEE
No reproduction or networking permitted without license from IHS
Not for Resale

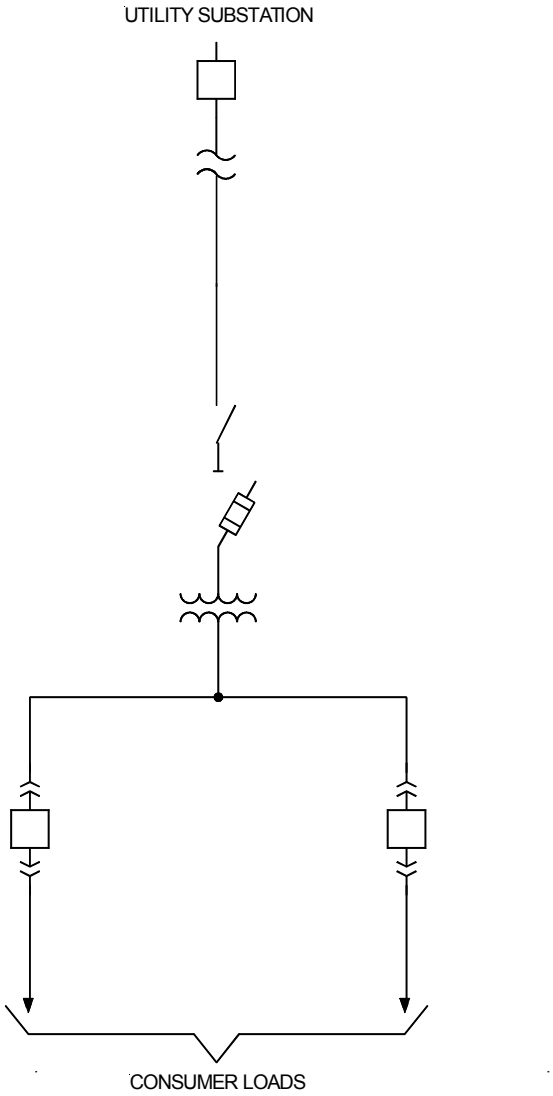

Figure 1—Single supply-single transformer (transformer with high-side fuse)

In Figure 2, the fused-disconnect switch has been replaced with a circuit breaker. Protective relays, measuring high-side current, can now be utilized to provide additional protection for the transformer and low-voltage bus. Again, the consumer is subject to an outage when maintenance is required.

Copyright © 2003 IEEE. All rights reserved.

Copyright The Institute of Electrical and Electronics Engineers, Inc.
Provided by IHS under license with IEEE
No reproduction or networking permitted without license from IHS
Not for Resale

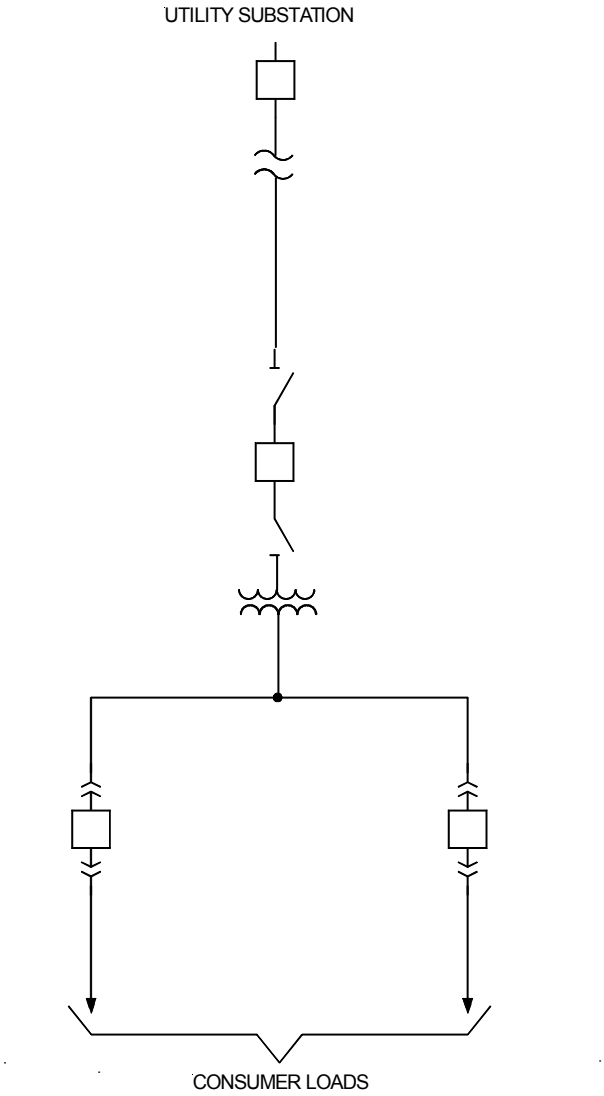

Figure 2—Single supply-single transformer (transformer with high-side breaker)

The system design of Figure 3 allows the interconnection circuit breaker to be removed from service for maintenance without a consumer outage, although additional protective relaying will be required at the utility source to maintain acceptable transformer protection. A maintenance outage of the supply line or transformer will still cause a consumer outage.

Copyright © 2003 IEEE. All rights reserved.
Copyright The Institute of Electrical and Electronics Engineers, Inc.
Provided by IHS under license with IEEE
No reproduction or networking permitted without license from IHS
Not for Resale

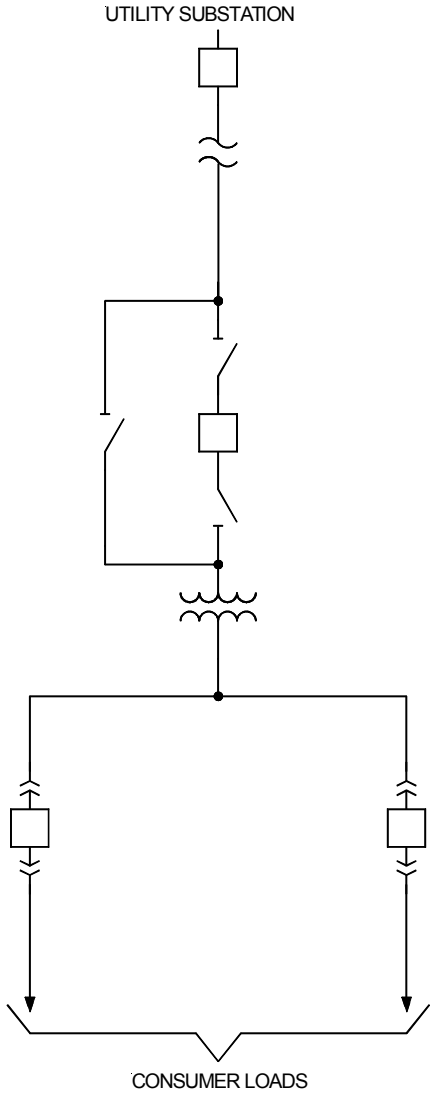

Figure 3—Single supply-single transformer (transformer with high-side breaker and bypass switches)

4.2 Dual supply-single transformer

Two or more full capacity supply lines will greatly enhance continuity of service. Because of its extensive exposure, the supply line is generally the least reliable component of the utility-consumer interconnection. Ideally, duplicate supply lines should originate from separate utility supply buses and be routed over separate rights of way. Each line should have the capacity to serve the consumer's total requirements if complete

Copyright © 2003 IEEE. All rights reserved.

Copyright The Institute of Electrical and Electronics Engineers, Inc.
Provided by IHS under license with IEEE
No reproduction or networking permitted without license from IHS
Not for Resale

redundancy is required. A dual supply allows dead line maintenance to be performed without an interruption to the consumer.

Figure 4 illustrates a dual supply with two manually operated switches located at the consumer load bus. System configuration may require the supplies to be looped together (i.e., both switches closed) or operated as two radial sources with one of the switches open.

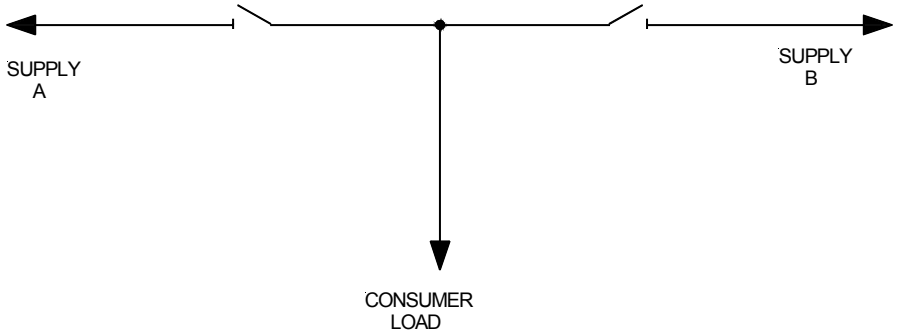

Figure 4—Dual supply-single transformer (manually-operated load breaker switches)

a) *Looped mode*. This mode dictates that both switches be closed during normal operation. A fault anywhere on the supply lines will cause a consumer outage. The switches can be used to isolate the faulted section and restore service to the consumer load bus via the remaining supply line. Outage time may be somewhat lengthy while switching is done to isolate the faulted section. Looped mode operation generally provides the consumer with a stronger source.
b) *Transfer mode*. In this mode, one of the switches at the consumer load bus is operated normally open. If a fault occurs on the supply line feeding the consumer, it can be isolated and service restored by closing the normally open switch. It is recommended that the normally open supply line remain energized at all times to ensure the availability of that source.

In Figure 5, motor-operated disconnects are used for switching loads at the consumer bus. This system also may be operated in either the looped or transfer mode. Sectionalizing systems are available that will automatically isolate a faulted line section and restore consumer load, reducing the outage time.

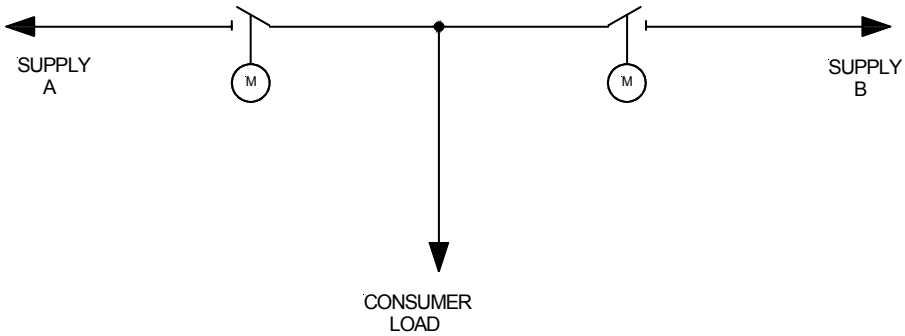

Figure 5—Dual supply-single transformer (motor-operated load break switches)

In Figure 6, the motor-operated disconnect switches are replaced with circuit breakers. Now the consumer is served with two supply lines with separate protective equipment. Note that circuit breaker disconnect

Copyright © 2003 IEEE. All rights reserved.
Copyright The Institute of Electrical and Electronics Engineers, Inc.
Provided by IHS under license with IEEE
No reproduction or networking permitted without license from IHS
Not for Resale

switches are provided for maintenance purposes. Bypasses may also be added if a looped system must be maintained.

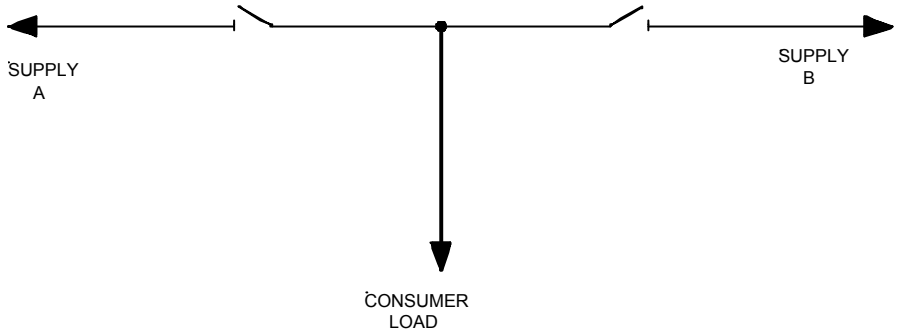

Figure 6—Dual supply-single transformer (circuit breakers)

4.3 Dual supply-dual transformer

The addition of a second transformer will also increase reliability. If each transformer is sized to carry total consumer load requirements, plant production need not be affected by the loss of a single transformer. The addition of the second transformer allows flexibility in the operation of the low-voltage bus. With two supply sources now available, it is possible to selectively choose where plant feeders are connected.

Figure 7 illustrates a dual supply-dual transformer configuration. Fuses are shown in this example, but replacing the fuse with high-side transformer circuit breakers or circuit switchers, and adding differential relays, will improve transformer protection.

Operating the system shown in Figure 7, with the low-voltage buses isolated from each other, minimizes fault current levels and provides for the isolation of plant equipment. If the low-voltage buses are not isolated but are operated in parallel (i.e., with the low-voltage tie closed and both transformers in service) additional protection is required on the low-voltage, and possibly the high-voltage, side of each transformer. Voltage transients from feeder or bus faults are less likely to impact total plant operation if the low-voltage buses are normally isolated. This may be particularly advantageous if there is voltage-sensitive equipment. Maximum short-circuit fault current on the low-voltage system will approximately double if the buses are operated in parallel. This may be an important consideration when choosing interrupting ratings. Operating the buses isolated may allow application of lower rated, and thus less expensive, feeder fuses and circuit breakers. However, if the feeder equipment is not rated to withstand the short-circuit current for a fault with both buses in parallel, then provisions must be included in the design of the control system to ensure that both main breakers cannot be closed at the same time as the bus-tie breaker. In this case, the consumer must recognize that outages are required for switching.

Copyright © 2003 IEEE. All rights reserved.

Copyright The Institute of Electrical and Electronics Engineers, Inc.
Provided by IHS under license with IEEE
No reproduction or networking permitted without license from IHS Not for Resale

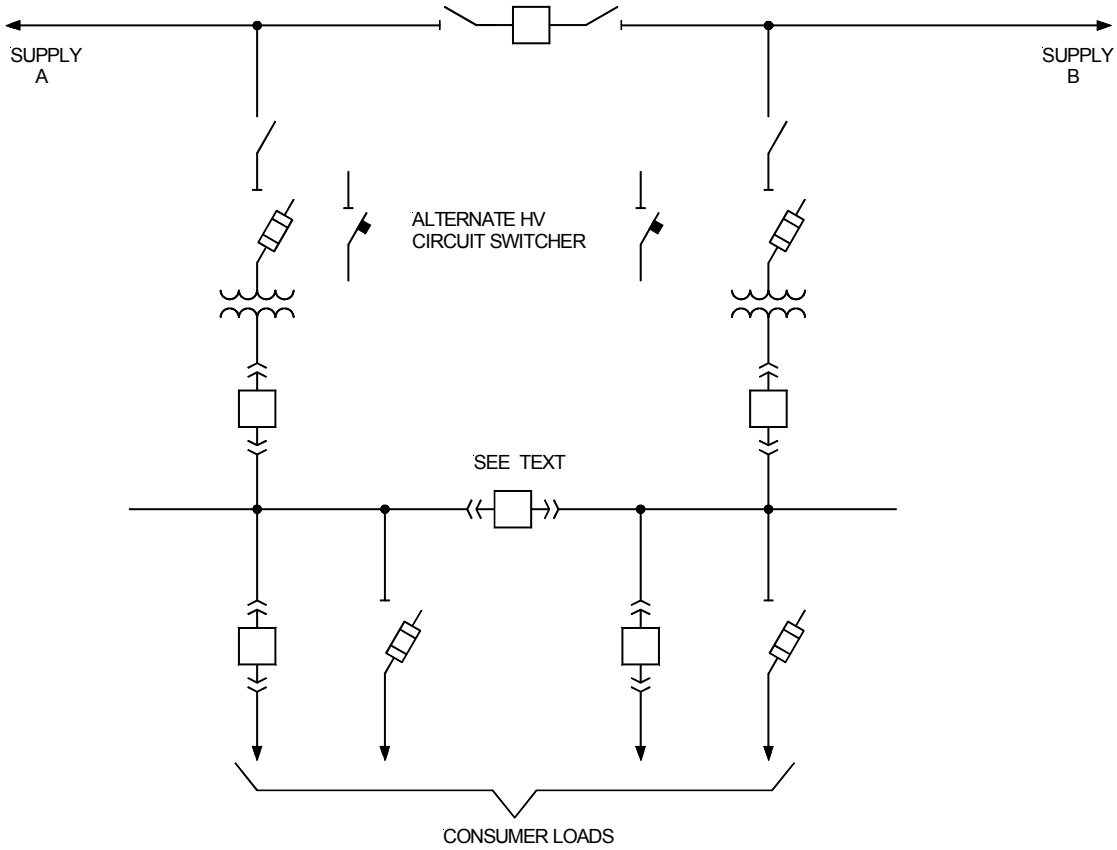

Figure 7—Dual supply-dual transformer (single-supply circuit breakers)

Improved transformer protection and service reliability may be obtained with the addition of supply line circuit breakers as shown in Figure 8. With this configuration, a supply line fault does not require an outage of a transformer. Operation with the low-voltage tie closed will provide continuous service to all consumer loads in the event of a transformer fault. However, as discussed in the previous paragraph, careful consideration of plant operation is necessary to determine the normal position of the low-voltage bus-tie breaker. Bypass switches will be required on the high-voltage supply-side breakers if supply lines A and B are to be looped together at all times. The relay systems should provide adequate protection when the high-voltage breakers are bypassed.

Copyright © 2003 IEEE. All rights reserved.
Copyright The Institute of Electrical and Electronics Engineers, Inc.
Provided by IHS under license with IEEE
No reproduction or networking permitted without license from IHS
Not for Resale

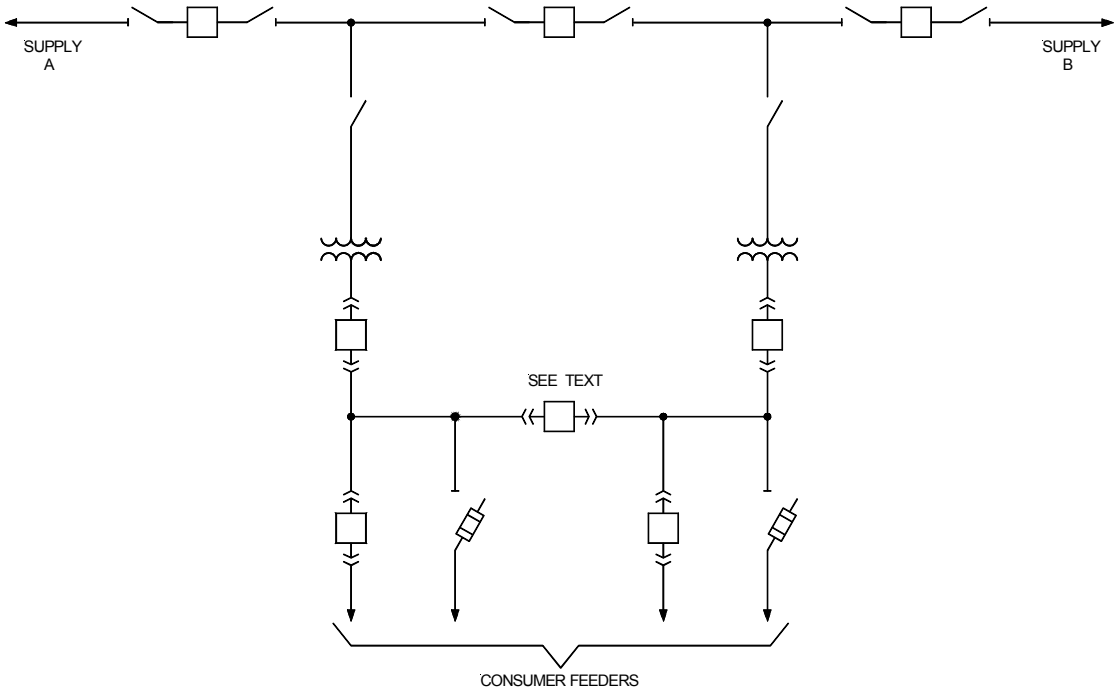

Figure 8—Dual supply-dual transformer (multiple-supply circuit breakers)

Figure 9 uses a ring bus on the supply side of the interconnection. With this system, transformer faults will not interrupt the remaining feed to the consumer or the connection between supply lines A and B, maintenance may be performed on any of the supply-side breakers without the use of bypass switches, and the failure of a single breaker will not interrupt the total electric supply. Service reliability to the consumer is improved if sources and loads are alternately connected around the ring bus. The low-side buses may be operated in parallel. Again, careful consideration should be given to plant requirements to determine the optimum operating position of the low-side bus-tie breaker.

Copyright © 2003 IEEE. All rights reserved.

Copyright The Institute of Electrical and Electronics Engineers, Inc.
Provided by IHS under license with IEEE
No reproduction or networking permitted without license from IHS Not for Resale

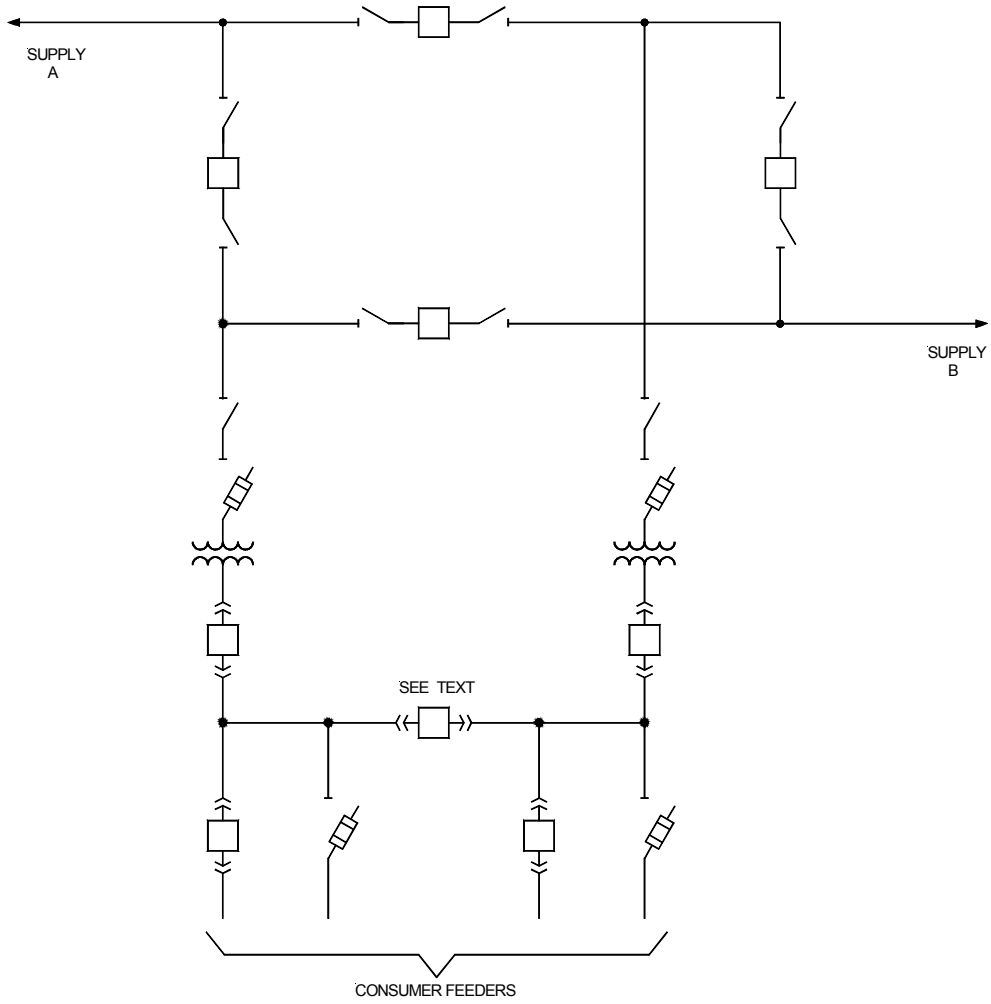

Figure 9—Dual supply-dual transformer (ring bus configuration)

5. Brief review of protection theory

5.1 Protection system design considerations

The philosophy in the implementation of any protection system should be to detect and isolate all failed or faulted components as quickly as possible, thereby minimizing the disruption to the remainder of the electric system. This objective implies that a protection system should be dependable (operate when required), secure (not operate unnecessarily), selective (only the minimum required number of devices should operate), and fast. In addition, backup protection should clear any fault upon failure of the protective equipment in the primary protection system. These desired features can be achieved by properly designing the electric system and the protection schemes.

5.1.1 Zones of protection

Any electric system can be divided into separate sections, or zones, through the application of interrupting devices (see Figure 10). Each zone consists of a specific type of electric facility with sensing devices at its

Copyright © 2003 IEEE. All rights reserved.
Copyright The Institute of Electrical and Electronics Engineers, Inc.
Provided by IHS under license with IEEE
No reproduction or networking permitted without license from IHS
Not for Resale

boundaries. By proper application of sensing devices and protective relays, it is possible to detect faults within the zone and limit operation of the interrupting devices to those required to isolate the faulted component.

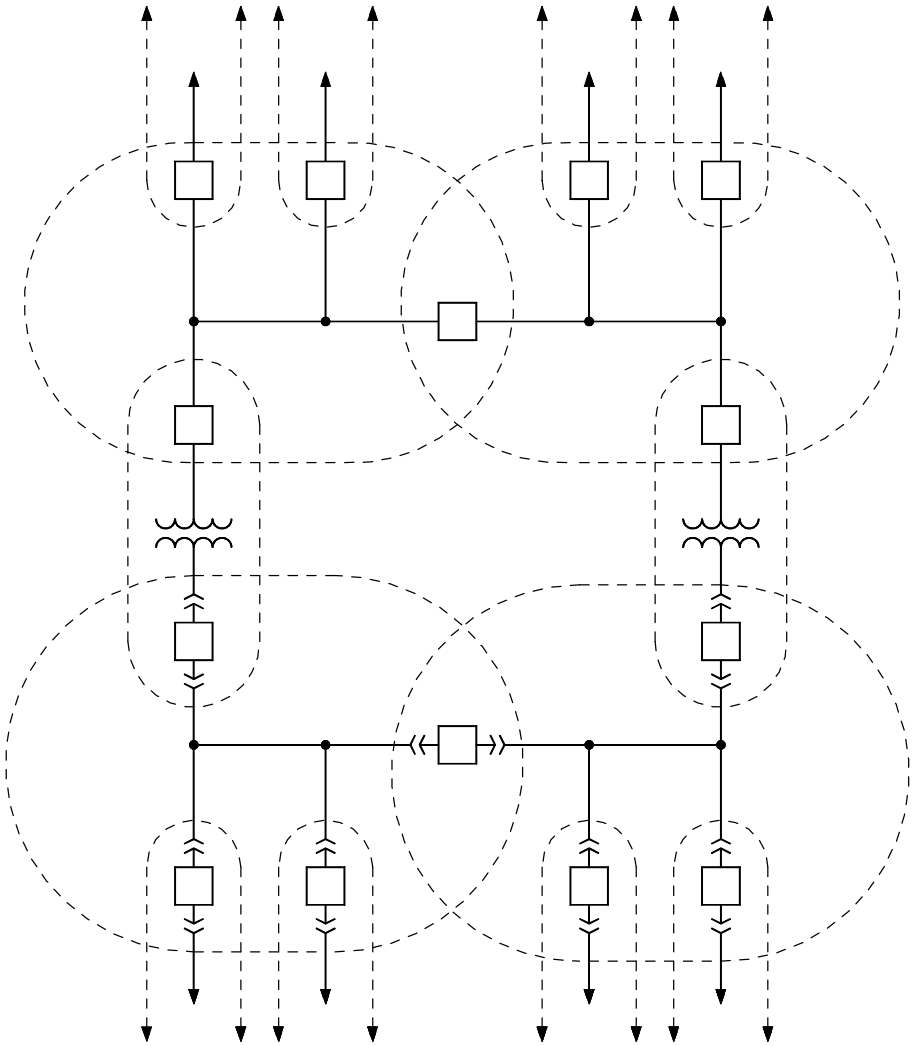

NOTE: DASHED LINES = PROTECTION ZONES

Figure 10—Protection zones

To ensure proper detection and clearing of faults that occur at the boundaries, zones are normally overlapped by connecting sensing devices and protective relays to overlapping current transformers (CTs). If fuses are used, proper selection of its current rating and speed will provide coordination between zones of protection.

The relative location of CTs and interrupting devices must be carefully considered when designing the protective relaying. Usually, the CTs are located on both sides of the interrupting device. In some cases, however, the CTs are physically separate and located on only one side of the interrupting device. If this occurs, a fault between the CT and the interrupting device could result in delayed clearing by the backup relays.

Copyright © 2003 IEEE. All rights reserved.

Copyright The Institute of Electrical and Electronics Engineers, Inc.
Provided by IHS under license with IEEE
No reproduction or networking permitted without license from IHS
Not for Resale

5.1.2 Backup

The design of a protective system should include backup protection to allow for failures and for periodic maintenance of the interrupting devices, sensing devices, and protective relays. Backup protection may be either remote or local or it may be a combination of both schemes. Remote backup protection consists of relays that are set to respond to faults in the next zone of protection. This type of protection is relatively slow as it should allow time for the primary relaying in that zone to operate. It also may cause interruption to large portions of the electric supply system.

In some cases, local backup protection is justified. Local backup consists of two sets of independent primary protection and breaker-failure relaying. Ideally, this should include two independent sets of current transformers, voltage transformers, protective relays, and breaker trip coils, but only one breaker-failure relaying system is required. Each protective relay system should be isolated so that a failure in one will not affect the other. Among other things, this requires that the control power for each system be supplied from separate low-voltage circuit breakers or fuses. Breaker-failure relaying is discussed in 5.2.4.3.

5.1.3 Fault data

Protective relay systems measure the current, voltage, or a combination of current and voltage during fault conditions. Fault current magnitude, and the associated change in voltage, varies with the type of fault and with the location of the fault with respect to the sensing devices. Therefore, a study of the types of faults that can occur is important to ensure that the selected protection system can detect and isolate all faulted portions of the electric system. The types of faults that should be considered are three-phase, phase-to-phase, double-phase-to-ground, and single-phase-to-ground.

5.1.4 Fault current versus load current

In most cases, fault current exceeds normal load current by a factor of 2 or more. However, special consideration should be given to situations where load current is greater than fault current. For example, on systems that are grounded through a neutral impedance, the ground fault current is lower than the normal load current magnitude. For this situation, the use of separate ground fault relaying is required.

High-voltage phase overcurrent devices should not respond to maximum load current because these devices are applied to provide protection for short-circuits but not for overloads. Conductors, transformers, and other current-carrying devices should be rated to carry the maximum expected load, taking into account load profiles, diversity, and short time equipment ratings. Occasionally, special overload protection is provided for high-voltage equipment, but this should generally be avoided because of the difficulty of coordinating these schemes while maintaining reliable operation of the power system. However, overload protection is required for low-voltage, consumer-owned equipment subject to the National Electric Code® (NFPA 70-1999 [B14]). Temporary overloads, such as motor-starting current and cold load pickup, should be considered when selecting and setting overcurrent devices. For further information regarding high-voltage distribution design and protection, see IEEE Std 141-1993 [B9] and IEEE Std 242™-2001 [B11].

5.2 Protection systems overview

It is not the intent of this guide to describe all of the application considerations for the fault interrupting device, sensing devices, and all types of protective relays that may be part of the utility-consumer interconnection. This clause identifies some of the main considerations in the application of interrupting and sensing devices. Also, it includes a general discussion of the types and overall application considerations for specific protective relaying schemes used on the lines, transformers, and buses that typically comprise the utility-consumer interconnection. Clause 7 of this guide provides a set of examples and related discussions of specific relaying application considerations.

Copyright © 2003 IEEE. All rights reserved.
Copyright The Institute of Electrical and Electronics Engineers, Inc.
Provided by IHS under license with IEEE
No reproduction or networking permitted without license from IHS
Not for Resale

5.2.1 Circuit-interrupting devices

Fuses are single-phase protective devices that combine sensing and interrupting functions into a single unit. Fuse operation is based on the magnitude and duration of current flowing in each phase of the circuit. The primary application considerations include maximum load, minimum and maximum fault current available, interrupting rating, operating time of the fuse relative to the operating time of protective devices on both the consumer and utility systems, and the effects of single-phase supply due to the operation of one fuse.

A circuit breaker is an interrupting device designed for normal switching functions as well as for fault interruption. Circuit breakers offer considerable flexibility and are available in a variety of voltage, current, and fault current interrupting ratings. High-voltage circuit breakers are equipped with separate electrically operated close and trip coils that can be controlled by any required protection and control package. Low-voltage circuit breakers can be equipped with shunt trip devices but are usually self-contained with integral thermal-magnetic or solid-state trip units.

A circuit-switcher is another type of interrupting device for load switching and limited fault interruption applications at higher voltages, usually 46 kV and above. Typically, these devices are used for switching and protection of transformers and station capacitor banks. Most circuit-switchers employ an SF_6 interrupter connected in series with a motor-operated disconnect switch. Control power for open and close operations may be either ac or dc depending on specific application requirements. Circuit-switcher fault interrupting capability is generally less than that of circuit breakers.

The bolted-pressure switch is an interrupting device designed for application at 480 V. This switch, which can be manually or electrically operated, consists of movable blades and stationary contacts. These switches are designed specifically for use with ground fault protection equipment and have a contact interrupting rating of 12 times their continuous rating (see 5.15 of IEEE Std 241™-1990 [B10]).

A consideration in the application of interrupting devices is the source of control power for the close and trip coils. A station battery is considered the most reliable source of dc control power, because battery output voltage is not affected by the ac voltage drop that can occur during short-circuit conditions. A capacitive trip device will store energy for a short period of time that is sufficient to trip a breaker. This device may be used under circumstances when it is not practical to use a battery, such as when battery maintenance, economics, or environmental concerns are an issue. When capacitive trip is used, the power to both the trip and close circuits is AC. The location of the ac source must be on the utility side of the main breaker to ensure power is available to close the main breaker.

5.2.2 Sensing devices

Protective relays must be isolated from the high-voltage system but require current and voltage quantities proportional to those on the electric supply system. The standard ratings for protective relays in the United States are 5 A and 120 V, 60 Hz. Current and voltage transformers produce these relay input quantities.

Circuit transformers (CTs) may be provided as part of a circuit breaker or transformer, or they may be separate devices. They are available in a variety of turn ratios and accuracy classes. CT application requires consideration of available fault current; load current; secondary connections; and the burden of relays, meters, and other devices connected to the secondary windings (See IEEE Std C37.110™-1996 [B4] and IEEE Std C57.13™-1993 [B5]).

Voltage transformers (VTs) are also available in a variety of types, ratios, and accuracy classes. As with CTs, the application of VTs requires consideration of the voltage level to be measured, primary and secondary connections, and the burden of devices connected to secondary windings.

Capacitive voltage transformers (CVTs) essentially consist of a capacitive voltage divider, a tuning reactor, and an intermediate voltage transformer. These devices are sometimes used as an alternative to VTs where

Copyright © 2003 IEEE. All rights reserved.

Copyright The Institute of Electrical and Electronics Engineers, Inc.
Provided by IHS under license with IEEE
No reproduction or networking permitted without license from IHS Not for Resale

they are more economical and where their inferior transient response is acceptable. CVTs also provide a means to couple power line carrier communication signals to the high-voltage line.

5.2.3 Types of protective relays

There are many types of protective relays and protection schemes available. The types of protective relays that are usually used for the utility-consumer interconnection are summarized in the following paragraphs. This summary applies to the relay function. The specific relays used can be either of electromechanical, solid-state, or microprocessor-based design.

Overcurrent relays are widely used and are applied to protect lines, transformers, and buses. Operation is dependent on the magnitude of the current in a circuit. Overcurrent relays can operate instantaneously, after a fixed time delay, or with inverse-time characteristics. An overcurrent relay can also be directional, which is normally accomplished by controlling the overcurrent relay with a separate element that determines the direction of the operating current. Although versatile and reliable, the application of overcurrent relays may be limited by an inability to provide settings to accommodate system configuration changes, inability to distinguish between load and fault current, slow operating speeds due to the necessity of coordination with downstream devices, or the inability to coordinate with other protective devices under all system conditions. If these factors are critical, more complex protection schemes should be utilized.

Distance relays are often used for line protection, particularly at higher voltages. These relays respond to both voltage and current and will operate when the impedance to the fault is less than its setting. As impedance is proportional to the distance along a transmission line, the term *distance relay* is used. Distance relays are generally used for network lines, that is, lines with a source at each end. They offer selective high-speed protection, directional sensitivity, and the ability to be applied in areas with low fault current to load current ratios.

Pilot protection is used for lines that require high-speed simultaneous clearing of all terminals. Pilot relays determine if the line is faulted by comparing fault conditions at all line terminals via a communication channel. This permits these relays to provide high-speed operation for faults anywhere on the protected line section. The communication links commonly used are power line carrier, microwave, fiber optics, pilot wire, and leased telephone lines.

For bus and transformer protection, differential relays are often applied. A differential relay compares the current at all terminals of the protected equipment. It can be designed to operate quickly for faults within its zone of protection yet not respond to faults outside this zone.

5.2.4 Consumer protective relaying schemes

The interconnection will require protection for the failure of the transformer, bus, and main breaker. There are a variety of protective schemes that may be used. A single scheme may be used, or it may be combined with other schemes. The type of protection employed will depend on the size and cost of the equipment and the arrangement of the interconnection. The following summarizes some typical protection schemes that are used on these interconnection facilities but does not cover all schemes that may be in use.

5.2.4.1 Transformer protection

Transformer protection is covered in great detail in IEEE Std C37.91™-2000 [B2]. The following is a brief discussion of the various types of transformer protection.

The simplest and least costly devices for transformer primary protection are fuses, which may be used on small transformers in single-supply interconnections. These same fuses may serve as backup protection to the secondary breaker and bus. The fuses must be coordinated with the line protection on the utility side and

Copyright © 2003 IEEE. All rights reserved.
Copyright The Institute of Electrical and Electronics Engineers, Inc.
Provided by IHS under license with IEEE
No reproduction or networking permitted without license from IHS
Not for Resale

with the secondary breaker on the load side. As most faults are not three-phase faults, only one or two fuses may blow, which can lead to single-phasing problems for three-phase motors or generators.

Transformer differential protection is usually used on large transformers and is often used on transformers where a source of fault current exists on the consumer side as well as on the utility side. This source could be a generator or a paralleled source from the utility, or both. Transformer differential protection utilizes CTs on both sides of the transformer. Transformer differential relays must include provisions to compensate for differences in the CT secondary current on either side of the transformer. In addition, the effects of transformer phase shift, mismatch due to load tap changing, energizing inrush currents, and the flow of ground currents in wye windings during external faults must also be considered in the design and application of transformer differential relays. These relays provide high-speed protection and do not require coordination with other relaying schemes. If there is no secondary main breaker, the differential zone may be extended to CTs on the outgoing breakers, thus including the low-voltage bus in the differential zone.

Overcurrent relays may be used as the primary protection for small transformers. On larger units, overcurrent relays are applied to backup or to supplement other transformer relays and to prevent transformer damage resulting from an overcurrent due to external faults. When connected to CTs on the high-voltage side, both instantaneous and time-overcurrent relays are used. The instantaneous-overcurrent relays are set to avoid operation for faults external to the transformer and are less sensitive than the time-overcurrent relays. An additional overcurrent relay is usually required on the transformer neutral to protect the wye winding of wye-delta or delta-wye transformers for single-phase-to-ground faults. Time-overcurrent relays may also serve as primary protection of the low-voltage bus if there is no secondary main breaker or as backup protection of the secondary main breaker and the low-voltage bus. In some instances, directional time-overcurrent relaying is used on the transformer secondary when there is a source on the secondary side. Time-overcurrent relaying must be coordinated with the time-overcurrent relays protecting adjacent zones. Because time-overcurrent relaying is slower and less sensitive than differential protection, more damage will occur to a faulted transformer and the disturbance on the system will last for a longer period of time.

As the name implies, a sudden-pressure relay is a device that responds to sudden changes in the internal pressure of the transformer. The sudden-pressure relay is mounted on the transformer tank and is provided by the transformer manufacturer. Sudden-pressure relaying is instantaneous and does not need to be coordinated with other protection. The sudden-pressure relay can be susceptible to malfunction during through faults and seismic events. For this reason, some utilities choose to alarm only with this relay. Other utilities supervise tripping with the normally closed contacts of an instantaneous-overcurrent relay connected to CTs on the low side of the transformer. This blocks tripping for the high current “through” faults, when sudden-pressure relay malfunction is possible, but allows detection by the sudden-pressure relay of low current internal faults. Other devices easily detect high current internal faults.

In some instances, a transformer is tapped off a transmission line without fuses, a breaker, or a circuit switcher on the primary side. In these cases, a communication channel must be installed. In the event of a fault, the transformer protection may then initiate a transfer trip signal over this channel to open the remote line terminal breakers.

Transformer faults are permanent, and reclosing is not desirable because it will only increase the damage to the transformer. Therefore, transformer protection usually operates a lockout relay that trips the associated interrupting devices and blocks reclosing.

5.2.4.2 Bus protection

Overcurrent devices on the transformer usually provide bus protection on small stations. These devices must coordinate with the feeder protection and are, therefore, relatively slow in clearing bus faults. On stations with a main and bus-tie breaker configuration (see Figure 7, Figure 8, or Figure 9), the main breaker should coordinate with the bus-tie breaker, which further increases the clearing time. For these cases, partial bus-differential overcurrent relays are often used. Partial bus-differential relays are connected to CTs on the

Copyright © 2003 IEEE. All rights reserved.

Copyright The Institute of Electrical and Electronics Engineers, Inc.
Provided by IHS under license with IEEE
No reproduction or networking permitted without license from IHS Not for Resale

main, tie, and other source breakers to measure the total bus current. Partial bus-differential overcurrent relays still have to coordinate with the feeder relays, but faster clearing can often be obtained because the coordinating time step between the main and bus-tie breakers is eliminated.

On larger stations, with attendant high short-circuit levels, the use of differential relays should be considered. This can sometimes be accomplished by extending the transformer differential relays to include the bus, but usually separate bus differential relays are installed. In either case, additional CTs are usually required for each circuit, which generally increases costs of protection. However, bus differential protection provides rapid clearing of faults, thereby decreasing fault damage and stress to the system.

The most significant application problem for bus differential relays is the unequal performance of bus CTs on external faults. A number of different design approaches are used to overcome this problem:

a) *High-impedance differential relays*. These relays discriminate between internal and external faults by the difference in voltage each fault produces. Low impedance CTs should be used that are dedicated to the bus scheme.
b) *Percentage-restraint differential relays*. These relays trip when an operating quantity (e.g., torque or voltage), developed within the relay, exceeds a value proportional to a restraining quantity. There are a number of electromechanical and solid-state designs available that may or may not require dedicated CTs of the same type and ratio.
c) *Linear coupler relays*. This system uses air core mutual reactors (linear couplers) instead of conventional CTs. Linear couplers produce an output voltage proportional to the current and will not saturate with high currents. The outputs of the couplers are connected in series to a voltage relay.

A third approach to bus protection is the bus-blocking scheme. The scheme, used on buses with radial feeders, requires an overcurrent relay on the main breaker. This relay operates after a short time delay and is interconnected with the instantaneous-overcurrent relays on each feeder. For an external fault, the associated feeder instantaneous-overcurrent relay picks up and blocks the operation of the main relay. For a bus fault, the feeder relays do not operate and the main breaker trips after a short delay, typically in the order of 0.1 seconds. Of course, the feeder instantaneous element should be set above the short-circuit contribution of the motors on its circuit. On a main and tie bus configuration, the partial bus-differential relay would be used for the main overcurrent element. This is an old scheme, which has found new life with the advent of programmable microprocessor relays.

5.2.4.3 Breaker-failure protection

Breaker-failure protection or stuck breaker protection is generally a name given to a specific scheme designed to operate in the event of a failure to trip or clear a fault by a breaker. This scheme is in addition to the overlapping reach of time-overcurrent relays that also provide some protection for a failed breaker.

A breaker may fail to trip for a variety of reasons, including a short or open circuit in the control wiring, an open trip coil, a loss of control power, or a problem with the mechanism. In addition, a breaker that does trip may fail to clear the fault due to a breakdown of the dielectric within the breaker, including restrike. A breaker-failure relaying scheme needs to take all of these conditions into consideration.

A typical breaker-failure relaying scheme is initiated by an auxiliary relay associated with each of the line, transformer, bus, or other schemes that trip that breaker. This breaker-failure initiate relay starts a timer relay. A second input to the scheme is from an instantaneous-overcurrent fault detector relay or a 52a auxiliary contact. The time delay relay is set to allow time for the breaker to trip correctly plus time for the overcurrent fault detector to reset plus a margin. If the overcurrent fault-detector relay is still picked up or the 52a contact is still closed when the timer times out, a lockout relay is tripped. The lockout relay, in turn, trips all breakers adjacent to the failed breaker. In the case of a line terminal breaker, a transfer trip signal may be communicated to the remote line terminal to trip that terminal. If high-speed clearing of the failed breaker is not required, time-overcurrent or zone 2 relaying may be used to clear the remote terminal.

--`,,`-`-`,,`,,`,`,,`---
Copyright © 2003 IEEE. All rights reserved.
Copyright The Institute of Electrical and Electronics Engineers, Inc.
Provided by IHS under license with IEEE
No reproduction or networking permitted without license from IHS
Not for Resale

5.2.5 Microprocessor relaying

Microprocessor relaying has gained widespread acceptance among both utilities and consumers. The relay functions are the same as those for electromechanical and solid-state electronic relaying, but microprocessor relays have features that provide added benefits. Microprocessor relays may have some disadvantages, however, so that there are additional considerations when these relays are applied to the utility-consumer interconnection.

The benefits of microprocessor relays include the ability to combine multiple relay functions into one economical unit. Where an electromechanical overcurrent relay may only be a single-phase device, a microprocessor relay will often include three phases and a neutral. It could also include reclosing, directional elements, over/undervoltage, and over/underfrequency. A transmission line relay could combine multiple zone phase and ground distance elements, overcurrent fault-detectors, pilot scheme logic, and reclosing. An electromechanical scheme will normally consist of individual relays for each zone of phase and ground protection, separate fault-detectors, and additional relaying for pilot scheme logic. Similarly, a microprocessor transformer relay might combine differential and overcurrent protection and a generator relay could include differential, overcurrent, negative sequence, frequency, voltage, stator ground, and other protective functions. These same devices can include nonrelaying functions such as metering, event recording, and oscillography. All of these functions are contained in an enclosure that requires less space than the combination of relays and other devices they duplicate.

A microprocessor relay also has self-monitoring diagnostic capabilities that provide continuous status of relay availability and reduces the need for periodic maintenance. If a relay fails, it is typically replaced rather than repaired. Because these relays have multiple features, functions, increased setting ranges, and increased flexibility, it permits stocking of fewer spares.

Microprocessor relays also have communication capability that allows for remote interrogation of meter and event data and fault oscillography. This also permits relay setting from a remote location. The relays have low power consumption and low CT and VT burdens. They also increase the flexibility of CT connections. For instance, microprocessor transformer differential relays can compensate internally for ratio mismatch and the phase shift associated with delta-wye connections.

All of these features have economic benefits in addition to the lower initial costs and potentially reduced maintenance costs that microprocessor relays have when compared to individual relays.

Although there are fewer disadvantages than advantages, there are some worth noting. The operating energy for most electromechanical relays is obtained from the measured currents and/or voltages, but most microprocessor relays require a source of control power. Another disadvantage is that the multifunction feature can result in a loss of redundancy. For instance, the failure of a single-phase overcurrent relay is backed up by the remaining phase and neutral relays. In a microprocessor scheme, the phase and neutral elements are frequently combined in one package and a single failure can disable the protection. Similarly, a microprocessor transformer package that has both differential and overcurrent relaying provides less redundancy than a scheme comprising separate relays. The self-diagnostics ability of the microprocessor relay, and its ability to communicate failure alarms, mitigates some of the loss of redundancy. It may also be economical to use multiple microprocessor relays.

Microprocessor relays require more engineering in the application and setting of the relay though less work in the panel design and wiring. The increased relay setting flexibility is accompanied by an increase in setting complexity that requires diligence to avoid setting errors. Also, some relays have experienced numerous software upgrades in a short period of time. Microprocessor relays have relatively shorter product life cycles because of the rapid advance in technology. As a result, a specific microprocessor relay model may only be available for a relatively short period of time. As failure may require replacement rather than repair, it may not be possible to use an exact replacement, which may require more engineering and installation work. Although less frequent testing may be required, when it is, it requires a higher level of training for the tech-

Copyright © 2003 IEEE. All rights reserved.

Copyright The Institute of Electrical and Electronics Engineers, Inc.
Provided by IHS under license with IEEE
No reproduction or networking permitted without license from IHS Not for Resale

nician and more test equipment than is normally used with electromechanical relays in order to obtain the full benefit of all the features of the microprocessor relay. The self-monitoring capability of these relays is only effective if the alarm output can be communicated to a manned location such as a control center. Also, the remote communication ability assumes there is a communication channel available to the relay.

An issue of particular interest to the application of microprocessor relays at utility-consumer interconnection is in defining responsibility for the applications available on the multifunction relay. For instance, in a multifunction generator relay, the over/undervoltage and over/underfrequency functions may be required by the utility for islanding protection but the differential function is solely for the protection of the generator. The utility may require that they set and test the over/undervoltage and over/underfrequency relays but may not want the responsibility for setting and testing the differential function. In this case, the purchase of separate relays or relay packages should be considered.

A similar issue exists concerning the communications capability of microprocessor relays in utility-consumer interconnections. Both the utility and the consumer can benefit from the communication capability. In particular, the recorded history of events can be very useful in analyzing relay operations after a fault. However, for both to communicate directly with the relay will require special considerations. Both the utility and the consumer may be required to purchase software licenses for the communication software if that software is proprietary. Also, they will both need to maintain the same versions of the software. The communication settings, such as modem baud rate, will have to be mutually agreed on. Some relays have security passwords, which restrict access. There may be one password to permit read only access to meter and event records and a different password to make changes. Although both parties may have read only access, ideally only one party should have the necessary access to make setting changes.

In general, microprocessor relaying is acceptable for use on utility-consumer interconnections and there are added benefits to using these relays. However, to make effective use of these relays to the mutual benefit of both parties requires an added degree of communication, cooperation, and coordination between the parties.

6. System studies

6.1 Types of studies

Studies of an electric system should be conducted to provide the utility and the consumer with information regarding normal and abnormal conditions on the system. Studies performed to determine requirements for design of the protection system include short-circuit and a stability studies. These studies provide fault current magnitude; required clearing time data; data needed for proper selection of equipment such as CTs, interrupting devices, and protective relays; and data required for calculating the settings of protective devices.

Both the utility and consumer require fault current data to apply protective devices and to determine the required ratings of interrupting devices. The utility should provide the consumer with the minimum and maximum three-phase and phase-to-ground short-circuit duty (and associated X/R ratios) at the consumer's point of service for initial conditions (and any future conditions). Short-circuit contributions from consumer-owned generators and motors should be provided by the consumer. This information should be expressed in a form such that it is possible to determine the utility contribution alone.

Load flow studies are essential prior to performing stability studies; they are also important if there are multiple connections between the utility and the consumer. Stability studies that take into account system dynamic characteristics are typically performed by utilities when specific major changes occur in generation levels or transmission system configuration. The installation of a consumer facility with significant generation or load may justify a stability study of the new electric system configuration. A consumer who is adding

Copyright © 2003 IEEE. All rights reserved.
Copyright The Institute of Electrical and Electronics Engineers, Inc.
Provided by IHS under license with IEEE
No reproduction or networking permitted without license from IHS
Not for Resale

generation or large synchronous motors may need to perform a separate stability study to examine the dynamic response of this equipment to disturbances within the plant.

Other studies may be required. Utilities may perform load flow studies in order to determine the best method of supply, and to identify changes to their facilities or operating practices that may be required due to a large consumer installation. In some cases, a transient analysis study may be required to determine the impact of a change in the switching sequence for energizing or reclosing a transmission line or transformer, or because of the installation of capacitors or reactors. The application of underfrequency relays (for load shedding, or as protective devices for large motors or steam-turbine generators) may require a special study to determine the frequency variation and decay rate associated with particular system disturbances. Even if special studies are performed at the time of each utility-consumer interconnection, the database used for planning and operating studies should be updated as new facilities are installed, so that the cumulative effect of numerous interconnections will be considered in future studies.

Studies may be required to determine if any transmission line overvoltage problems will occur under certain switching conditions. Ungrounded high-voltage transformer connections (e.g., delta-connected windings) in combination with consumer low-voltage synchronous motor loads and/or generation can introduce severe transient overvoltages if the utility end of the transmission circuit trips with the consumer's transformer still connected. These transient overvoltages can be considerably higher than the times line to neutral voltage normally expected for unfaulted phases on a delta system when there is a single-line-to-ground fault. In extreme cases, tripping at the utility terminal of the transmission line must be delayed to ensure that the remote consumer end is tripped first by direct transfer trip facilities.

6.2 Required data

The basic data required for all electric system studies is the positive, negative, and zero-sequence impedance values of each system element, including generators, transformers, motors, cables, and lines. For generators and synchronous motors, the transient and subtransient reactances are also required. The most common method of presenting this required data is in per unit or percent. The required data are often shown on a one-line diagram covering all associated facilities.

6.3 Performance of studies

Essentially, all system studies are conducted with computers using generalized application software. The type and complexity of studies to be performed will generally determine who will conduct the study. Regardless of who performs the study, any results that impact on the design or operation of the interconnections should be communicated to the other party.

7. Interconnection examples

This clause provides four examples of interconnection protection of varying complexity. The figures utilize IEEE Std 315-1975[4] and IEEE C37.2-1991.

7.1 Single supply from a remote utility substation

This interconnection is illustrated on Figure 11.

[4]See Clause 2 for information on references.

Copyright © 2003 IEEE. All rights reserved.

Copyright The Institute of Electrical and Electronics Engineers, Inc.
Provided by IHS under license with IEEE
No reproduction or networking permitted without license from IHS Not for Resale

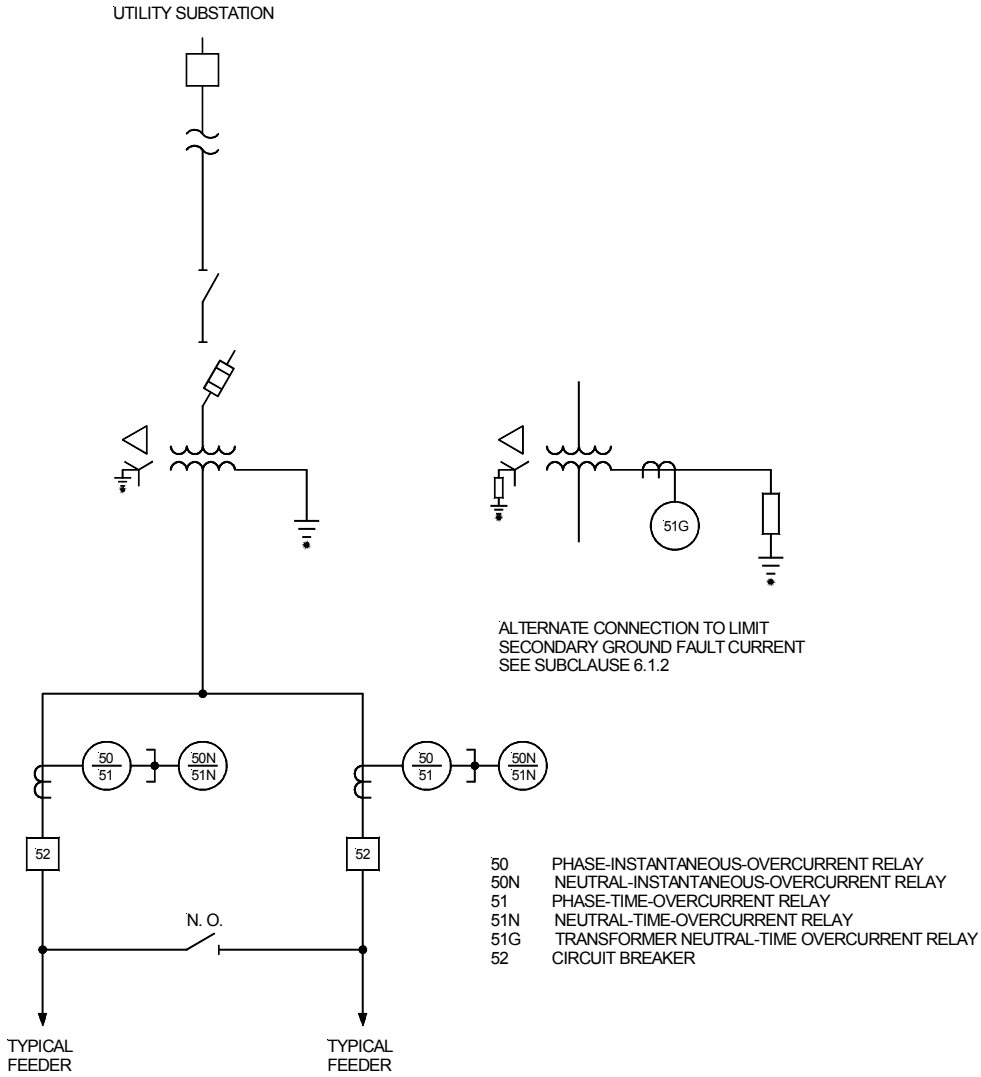

Figure 11—Single supply from a remote utility substation (single-transformer/single-bus configuration)

7.1.1 General description

The utility supply voltage will vary depending on availability and consumer requirements. The consumer transformer is connected delta on the high-voltage side and grounded wye on the low-voltage side. A fused-disconnect switch provides three-phase switching and protection for the transformer, as well as physical isolation of the transformer during maintenance.

The consumer voltage may range from 480 V to 34.5 kV. A normally open feeder tie switch is shown to facilitate circuit breaker maintenance.

7.1.2 Transformer protection

Several factors are involved in selecting the transformer high-side fuses.

Copyright © 2003 IEEE. All rights reserved.
Copyright The Institute of Electrical and Electronics Engineers, Inc.
Provided by IHS under license with IEEE
No reproduction or networking permitted without license from IHS
Not for Resale

a) In general, the voltage rating of the fuse should be equal to or greater than the system phase-to-phase voltage. Solid material expulsion-type fuses are not "voltage critical" and may be applied on systems rated less than the voltage rating of the fuse. In contrast, current-limiting fuses, which are available in ratings through 34.5 kV, inherently develop an overvoltage during fault current interruption. This overvoltage typically restricts application of current-limiting fuses to the same system voltage class as the maximum voltage rating of the current-limiting fuse.
b) The interrupting rating of the fuse should be equal to or greater than the maximum anticipated fault duty, including possible utility system expansion.
c) The continuous current rating of the fuse should be equal to or greater than the maximum anticipated emergency loading of the transformer. Note that the overload capability of power fuses may vary from 0% to 40% with different fuse types and with different ampere ratings of the same fuse type.
d) The continuous current rating and melting time-current characteristics of the fuse should be selected to provide optimum transformer protection as well as coordination with upstream and downstream relays or fuses, taking into account the effect of ambient temperature and load current heating. To achieve fast fault clearing, it may be necessary to accept fuse melting along with tripping of the low-side breakers for close-in feeder faults. For further information, refer to IEEE Std C37.91-2000 [B2]. If two transformers are involved, as in Figure 7, the fuse size and relay setting or fuse coordination should be selected based on the normal maximum loading level of both transformers. Coordination with the low-side breaker may be sacrificed under emergency loading conditions with one transformer out of service.
e) Primary fusing as the only means of transformer protection may not be suitable if the secondary ground fault current is limited by using resistance grounding on the neutral. This is because the primary current resulting from a phase-to-ground secondary fault may not be sufficient to melt the fuse. If low-resistance grounding is used, several relay schemes can be employed to clear a ground fault between the transformer and feeder breakers, or beyond the feeder breakers if one fails to open. All of these schemes use a neutral CT and overcurrent relay (51G). This neutral overcurrent relay (51G) trip output can be connected to do one of the following:
    1) Close a high-side grounding switch to force tripping of the remote utility breaker
    2) Open a high-side motor-operated switch that is rated to interrupt such faults
    3) Transfer trip the remote utility breaker

7.1.3 Transformer low-side bus and feeder protection

The fuse provides protection for transformer high-side and low-side faults. It also provides limited backup protection for low-side feeder faults.

Feeder phase protection is provided by nondirectional instantaneous and time-overcurrent relays. The purpose of the instantaneous relays is to provide high-speed detection of close-in faults. On short feeders, where the magnitude of fault current does not decrease significantly from the bus to the end of the feeder, coordination of the instantaneous relays with downstream protective devices may be difficult, if not impossible. The time-overcurrent relays should coordinate with the largest protective device on the feeder. The time current characteristics of the relays should be selected accordingly. For coordination with branch fuses, a very inverse or extremely inverse-time characteristic should be selected. Phase relay pickup should be greater than the expected full load current on the feeder. It is also important to check coordination of the time-overcurrent relay with the transformer high-side fuse. Coordination should be reviewed when the load-side tie switch is closed. The phase relay pickup should be high enough to carry the load of both feeders and still provide adequate fault protection while maintaining coordination with the high-side fuse.

Feeder ground fault protection may be provided by nondirectional instantaneous and time-overcurrent relays. A ground relay, connected in the neutral circuit, is not sensitive to balanced three-phase load current. Only currents resulting from an unbalanced load (on a four-wire system), or unbalanced faults involving ground, will flow in the ground relay. Thus, the feeder full load current need not be a directly considered when determining relay pickup. The following are two different methods for setting ground relays:

--`,,`-`-`,,`,,`,`,,`---

Copyright © 2003 IEEE. All rights reserved.

Copyright The Institute of Electrical and Electronics Engineers, Inc.
Provided by IHS under license with IEEE
No reproduction or networking permitted without license from IHS Not for Resale

a) *Maximum coordination*. The ground relay has a setting identical to that of the phase relays. This ensures the same degree of coordination with downstream protective devices as the phase relay. The ground relay will provide redundancy in the event of phase relay failure for a line-to-ground fault.
b) *Maximum ground fault sensitivity.* The ground relay instantaneous and time-overcurrent pickup may be set much lower than phase relay pickup. This provides sensitive protection for ground faults but may also result in feeder outages for faults that would normally be cleared by downstream protective devices. For greater sensitivity, the ground relay may also be set with a time-overcurrent relay pickup of about one-half that of the phase relay but with a high time-dial setting to coordinate with downstream fuses over a reasonable range of fault current.

7.1.4 Protection of the supply line

Different supply voltage levels generally dictate different levels of utility line protection. These systems will normally trip instantaneously for all line faults. The utility's instantaneous relaying may reach into the consumer's transformer, but not completely through it. Ideally, transformer faults that are detected by instantaneous line relaying should also blow the transformer fuse. This permits the line to be reenergized and the fault located. Transformer isolation in this manner may not always be possible, particularly on utility systems with large fuses and relatively low levels of ground fault current.

Normally, the supply line will also be protected with time-delayed relays. These relays may reach completely through the transformer, depending on other relay setting restraints on the utility system. If the relays do respond to low-side faults, coordination is necessary with the transformer fuses. If coordination between the fuses and the supply line protection is not possible, the consumer may be required to use relay protection (connected to high-voltage CTs) for the transformer, instead of fuses. Failure to achieve coordination may result in nuisance tripping, additional damage to the transformer due to supply line automatic reclosing, and an extended outage of the supply line while maintenance personnel are trying to locate the fault.

7.2 Dual supply from a remote utility substation, single-transformer configuration

This configuration is illustrated on Figure 12.

7.2.1 General description

The utility supply may be configured in a variety of ways as discussed in 4.2. The motor-operated air break switches (MOABS) provide for automatic load transfer of the utility sources. The transformer size for this configuration will typically be large enough to justify the application of a high-side circuit switcher and protective relays.

7.2.2 Transformer protection

Faults in the transformer of this example should be detected by transformer differential relays (87T) and a sudden-pressure relay (63). These relays will trip the circuit switcher through individual lockout relays. The transformer differential and sudden-pressure relay scheme provides greater sensitivity than does the high-voltage fuse discussed in 7.1 (see IEEE Std C37.91-2000 [B2].)

7.2.3 Transformer low-side bus and backup feeder protection

Phase overcurrent relays (50/51) are connected to CTs located on the high side of the power transformer to provide protection for low-side bus faults. These relays also provide backup protection for the transformer differential relays and the consumer's feeder breakers. The time-overcurrent unit (51) must coordinate with all downstream devices. The instantaneous unit (50) must not respond to low-side fault current levels to ensure coordination with the feeder relays. This could require a setting of nearly 200% of the maximum low-side

Copyright © 2003 IEEE. All rights reserved.
Copyright The Institute of Electrical and Electronics Engineers, Inc.
Provided by IHS under license with IEEE
No reproduction or networking permitted without license from IHS
Not for Resale

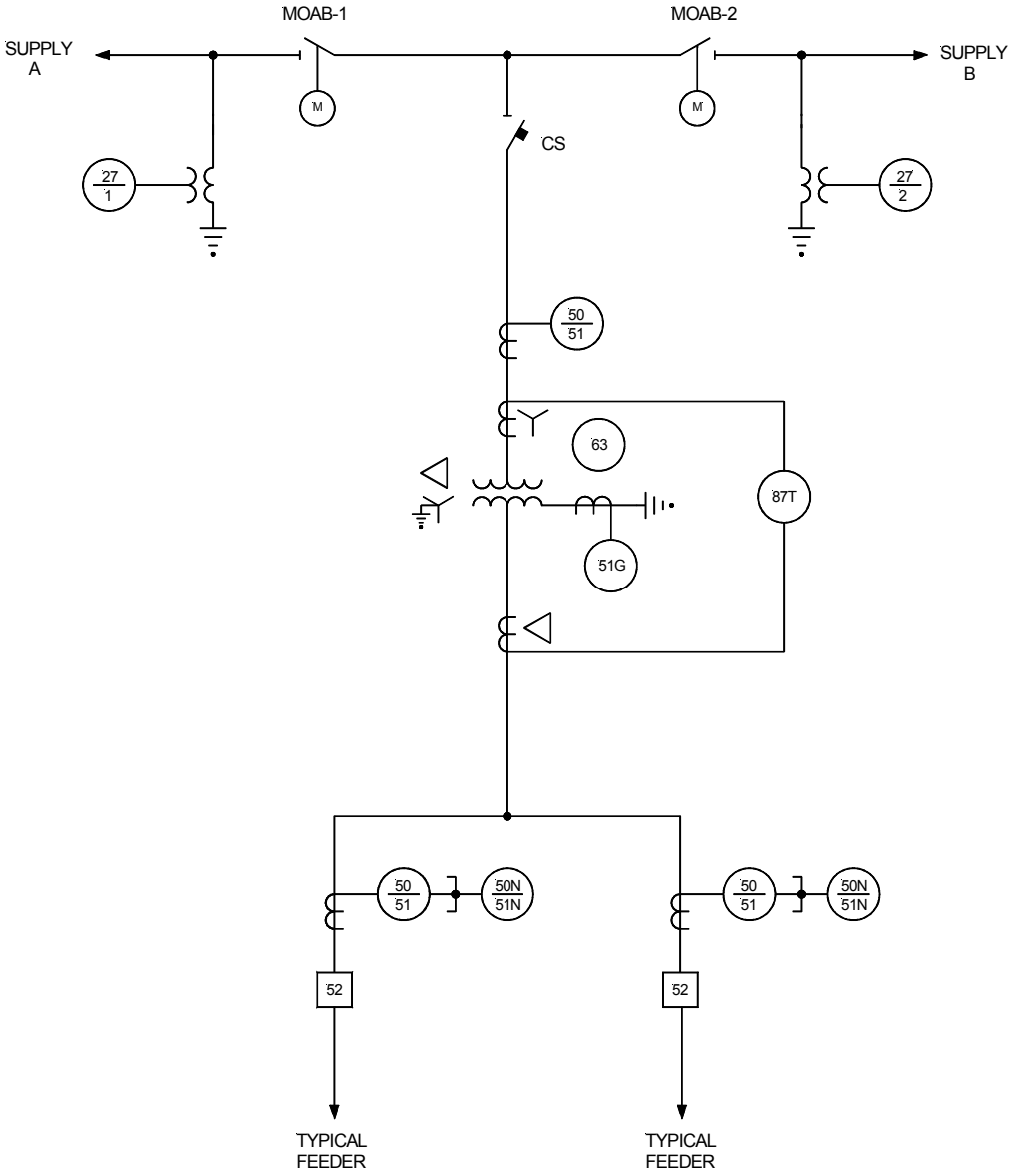

CS	CIRCUIT SWITCHER
27	UNDERVOLTAGE RELAY
87T	TRANSFORMER DIFFERENTIAL
63	TRANSFORMER SUDDEN-PRESSURE RELAY
50	PHASE-INSTANTANEOUS-OVERCURRENT RELAY
50N	GROUND-INSTANTANEOUS-OVERCURRENT RELAY
51	PHASE-TIME-OVERCURRENT RELAY
51N	GROUND-TIME-OVERCURRENT RELAY
51G	TRANSFORMER NEUTRAL-TIME OVERCURRENT RELAY
52	CIRCUIT BREAKER

Figure 12—Dual supply from a remote utility substation (single-transformer/single-bus configuration)

Copyright © 2003 IEEE. All rights reserved.

Copyright The Institute of Electrical and Electronics Engineers, Inc.
Provided by IHS under license with IEEE
No reproduction or networking permitted without license from IHS
Not for Resale

symmetrical three-phase fault current if the instantaneous relay responds to the offset component of an asymmetrical fault.

An overcurrent relay (51G) is added to the transformer neutral to improve low-side ground fault protection, because the phase overcurrent relays (50/51) located on the transformer high side are relatively insensitive to these faults. This relay must also coordinate with feeder ground fault protection. Feeder phase and ground fault protection has been previously described in 7.1.3.

In general, it is recommended that the transformer phase and ground overcurrent relays trip the circuit switcher through a lockout relay. In many cases, the transformer sudden-pressure and overcurrent relay tripping will be combined to operate one lockout relay, while the differential relay operates another. Each lockout should have a separate source for control power.

7.2.4 Protection of the supply line

The relay system employed by the utility to protect the supply line will often trip instantaneously for line faults. Transformer faults in the high-side winding may also be of sufficient magnitude to operate the relays and trip the associated breaker at the remote utility substation. In this case, transformer relaying should also respond, isolating the transformer from the supply line, which will permit the supply line to be reenergized.

The MOABS are automatically operated by undervoltage relays in either a looped or transfer mode, which are described in 7.2.4.1 through 7.2.4.2. For either operating mode, the MOABS may not be capable of interrupting load current. If this is so, then at least two undervoltage relays connected to different phases, with their contacts in series, is suggested to avoid opening a switch under load due to a single relay failure, fuse operation, or line failure.

7.2.4.1 Looped mode

In this mode, MOABS-1 and MOABS-2 are normally closed. Undervoltage relays (27-1, 27-2) monitor line potential for each switch. The supply line circuit breakers (not shown in Figure 12) provide the necessary interrupting capability for line faults. To properly sectionalize a fault, coordination between the MOABS relays and those controlling the supply line breakers is essential.

Assume that a fault occurs on the line between Supply B and MOABS-2. Supply line circuit breakers at sources A and B will interrupt the fault. The line circuit breakers may reclose automatically, assuming the fault is not permanent in nature. If the fault is permanent, both circuit breakers will trip again and remain open long enough for undervoltage relays, 27-1 and 27-2, to operate and open MOABS-1 and MOABS-2. These relays must be set with sufficient delay to allow the single reclose attempt. After the MOABS are open, the supply line circuit breakers are allowed an additional reclose. Source A breaker will close successfully, but source B breaker will trip and remain open.

Upon reenergizing from Source A, undervoltage relay 27-1 will initiate a return-of-potential timer to close MOABS-1. When MOABS-1 closes, service will be restored to the consumer. MOABS-2 will remain open until the fault is removed and the source B breaker is closed. It will then close via a return-of-potential timer associated with undervoltage relay 27-2.

7.2.4.2 Transfer mode

In this mode, one of the MOABS is operated normally open; the other is normally operated closed. Both sources are normally energized. With an outage of the normal source, the load will be switched automatically to the alternate source.

If the MOABS cannot interrupt load current, then undervoltage relays should have a low set-point to avoid operation for an open-phase condition. However, if the MOABS can interrupt load current, then it would be

Copyright © 2003 IEEE. All rights reserved.
Copyright The Institute of Electrical and Electronics Engineers, Inc.
Provided by IHS under license with IEEE
No reproduction or networking permitted without license from IHS
Not for Resale

desirable to transfer for this condition. The transfer should be delayed until after the first reclosure of the source-line breaker to avoid unnecessary transfer for temporary faults on the line. The time delay should be coordinated with the line reclosing to avoid switching at the time of a reclosure.

Assume MOABS-1 is normally closed, MOABS-2 is normally open, and that a permanent fault occurs on the line between Supply A and MOABS-1. The supply breaker will deenergize the line, and MOABS-1 will open after undervoltage relay 27-1 has dropped out. Again, dropout delay is necessary if a single reclose attempt is required. When MOABS-1 is completely open, then MOABS-2 will close to pickup consumer load through supply line B.

The scheme should be designed to automatically transfer back to supply line A once the line is restored. This transfer is made with a close/open sequence to avoid service interruption. Note that in this case, both MOABS must be suitable for interrupting the current for the closed loop connection.

Looped or transfer sectionalizing sequences normally require between 15 and 30 seconds, although faster transfer can be achieved, especially at 34.5 kilovolts and below, where transfer times of 2 seconds or less are common. To prevent repeated tripping and lockout of both lines for a fault in the load substation, control logic may be added to lock open both switches if the line voltage relay drops out within a few seconds of closing the associated switch.

7.3 Dual supply from a remote utility substation, dual-transformer configuration

This configuration is illustrated on Figure 13.

7.3.1 General description

Reliability is improved with the addition of a second transformer and consumer load bus. Breaker 52-6 is common to both supply lines and consumer transformers. The addition of breaker 52-6 and appropriate protection eliminates a total consumer outage for a supply-line fault.

Consumer service requirements will dictate the transformer's capacity. If full-capacity plant operation is critical at all times, each transformer should be sized to carry the total load. Thus, the failure of a transformer or a supply line will not seriously affect plant operation.

For this example, line breaker 52-6 and low-voltage bus-tie breaker 52-5 are both normally closed. When breaker 52-6 is open for maintenance and there are no bypass switches installed, it may also be necessary to open breaker 52-5 to avoid unwanted power flow from one utility supply line to the other through the consumer transformers.

7.3.2 Transformer protection

Differential (87T), sudden-pressure (63), and high-side overcurrent (50/51) relays should be applied for transformer fault protection. Operation of any of these relays will open the transformer circuit switcher and low-side main breaker. It is recommended that these relays trip through separate lockout relays as discussed under 7.2.3.

7.3.3 Transformer low-side bus and feeder protection

Figure 13 illustrates two common methods for bus protection. In actual practice, only one of these two schemes would be used.

The low-side bus for Transformer 2 is protected with differential relays (87B2). This will provide selective tripping, isolating the faulted bus from the system. Consumer load connected to the other bus will remain in

Copyright © 2003 IEEE. All rights reserved.

Copyright The Institute of Electrical and Electronics Engineers, Inc.
Provided by IHS under license with IEEE
No reproduction or networking permitted without license from IHS Not for Resale

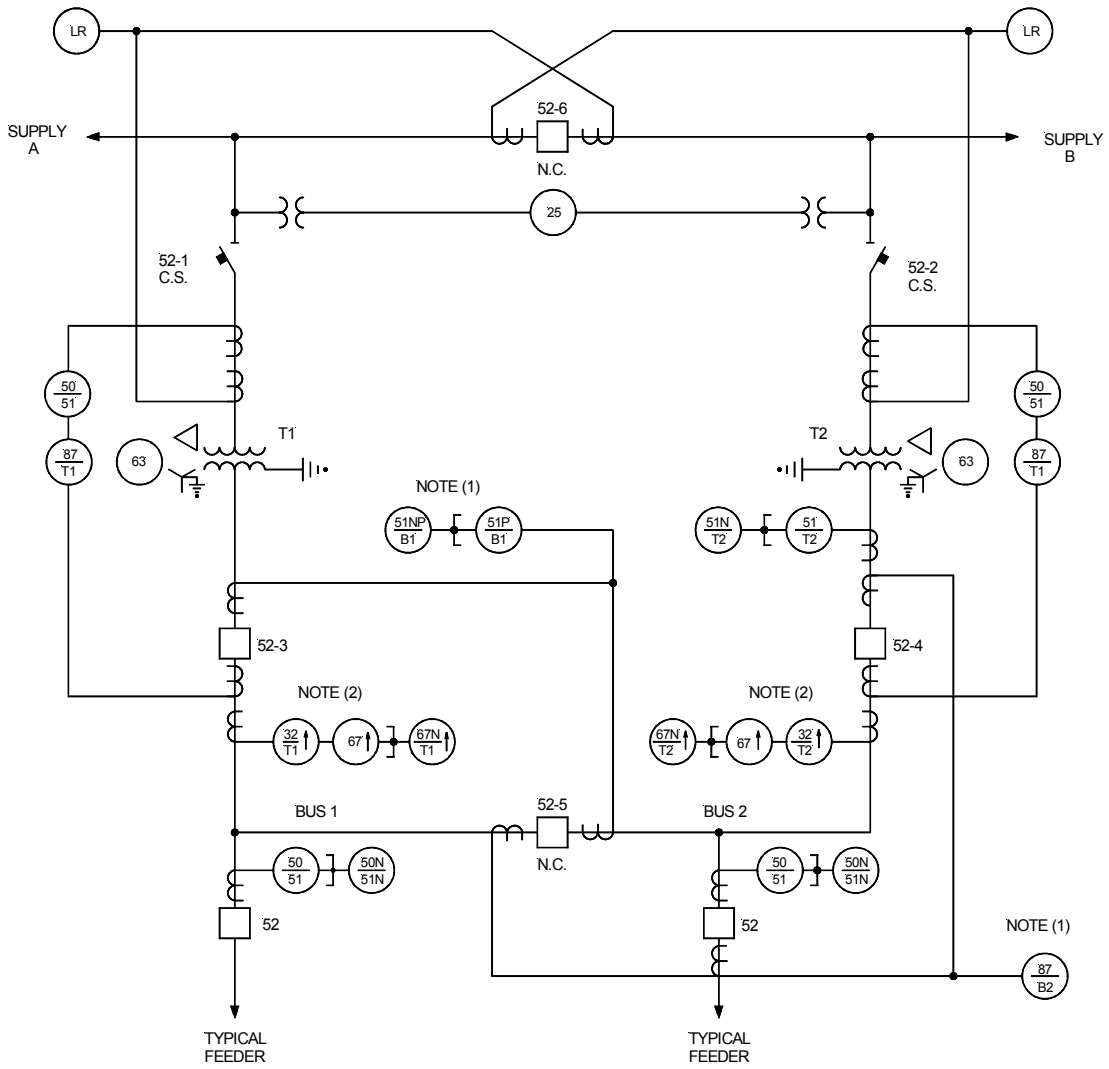

52 CIRCUIT BREAKER/CIRCUIT SWITCHER
C.S. CIRCUIT SWITCHER
25 SYNCHRONISM CHECK RELAY
87T TRANSFORMER DIFFERENTIAL
63 TRANSFORMER SUDDEN-PRESSURE RELAY
50 PHASE-INSTANTANEOUS-OVERCURRENT RELAY
50N GROUND-INSTANTANEOUS-OVERCURRENT RELAY
51 PHASE-TIME-OVERCURRENT RELAY
51N GROUND-TIME-OVERCURRENT RELAY
51P PARTIAL DIFFERENTIAL PHASE OVERCURRENT RELAY
51NP PARTIAL DIFFERENTIAL GROUND OVERCURRENT RELAY
87B BUS DIFFERENTIAL RELAY
32 DIRECTIONAL POWER RELAY
67 DIRECTIONAL PHASE OVERCURRENT RELAY
67N DIRECTIONAL NEUTRAL OVERCURRENT RELAY
L.R. LINE RELAYING AS REQUIRED BY THE UTILITY

NOTES

(1) TWO ALTERNATE PROTECTION SCHEMES ARE ILLUSTRATED IN THIS FIGURE. NORMAL PROTECTION PRACTICES WOULD UTILIZE ONE.

(2) POTENTIAL CONNECTIONS NOT SHOWN

Figure 13—Dual supply from a remote utility substation (single-high-side breaker/dual-transformer configuration)

Copyright © 2003 IEEE. All rights reserved.
Copyright The Institute of Electrical and Electronics Engineers, Inc.
Provided by IHS under license with IEEE
No reproduction or networking permitted without license from IHS
Not for Resale

service. Additional bus and feeder backup protection is provided by nondirectional phase and ground overcurrent relays (51T2, 51NT2) located on the low side of the transformer. These will be set with a delayed trip to allow sufficient time for the bus differential or feeder protection to operate.

A partial bus-differential overcurrent relay system is used for low-side bus protection on Transformer 1. Unlike a full differential, there is no CT input from the feeder breakers. This makes the partial bus-differential relay responsive to feeder faults, so coordination with feeder overcurrent relays is required. CTs with similar performance ratings are recommended. This system will provide bus fault protection as well as backup protection for the feeder breakers.

The partial bus-differential overcurrent relay may replace the low-side overcurrent relay, 51T. However, if both the transformer low-side and partial bus-differential relays are applied, the transformer low-side relay setting should be suitable for the total load with one transformer out of service and coordinate with the bus overcurrent relay for a fault on the opposite bus with that transformer out of service.

Feeder phase and ground fault protection has been previously described in 7.1.3.

7.3.4 Protection of the supply line

Each of the supply lines will be protected with a separate set of relays (LR). It is necessary to parallel CTs from transformer T1 and 52-6 for the relays protecting supply line A. Supply line B requires CT paralleling from transformer T2 and 52-6. This will ensure that all current flowing on each supply line is properly measured. CTs should have similar performance characteristics when paralleled in this manner.

The specific type of line protection will vary depending on such factors as voltage level, consumer requirements, line configuration and length, and utility line protection standards. It is reasonable to expect a primary system that will respond to all line faults with little, if any, time delay.

A secondary protection system may be employed on each line to provide backup tripping if the primary system fails. Communication systems with the remote line breakers may be needed with one or both relay systems.

A fault on supply line A will trip breakers 52-3 and 52-6. To avoid unnecessary power transfer through the consumer transformers, breaker 52-6 should be closed first after the fault is cleared. This will connect the two utility sources back together. Then breaker 52-3 can be reclosed, allowing transformer T1 to pick up the load. Breaker 52-6 may only be allowed to close after the supply line is successfully energized. A synchronism-check relay (25) could be used to ensure that 52-6 would only close when the two sources are in synchronism and nearly in phase.

The directional overcurrent relays (67) will provide backup protection for transformer and multiphase faults on the supply line. These relays respond to faults only in the direction of the transformer and permit settings below consumer feeder relays and the transformer's full-load rating (see 7.4.4).

Reverse power relays (32) added to each transformer will alarm or trip in response to power flow toward the utility. With breaker 52-6 open and 52-3 closed, neither the supply line relays nor the directional overcurrent relays (67) will operate for transmission line-to-ground faults, because the transformer high-side windings are connected delta. Reverse power relays (32) may be suitable for clearing ground faults if they can be set fast enough to coordinate with the line reclosing and if they are sensitive enough to respond to the in-phase component of transformer core losses. If this is not the case, then zero-sequence overvoltage relays should be considered for the primary side of each transformer to detect permanent ground faults on the supply lines when breaker 52-6 is open. See 7.4.4 and 7.5.4 for additional discussions of this relay system.

Copyright © 2003 IEEE. All rights reserved.

Copyright The Institute of Electrical and Electronics Engineers, Inc.
Provided by IHS under license with IEEE
No reproduction or networking permitted without license from IHS
Not for Resale

7.4 Dual supply from a remote utility substation, dual-circuit-switcher, and transformer configuration

This configuration is illustrated on Figure 14.

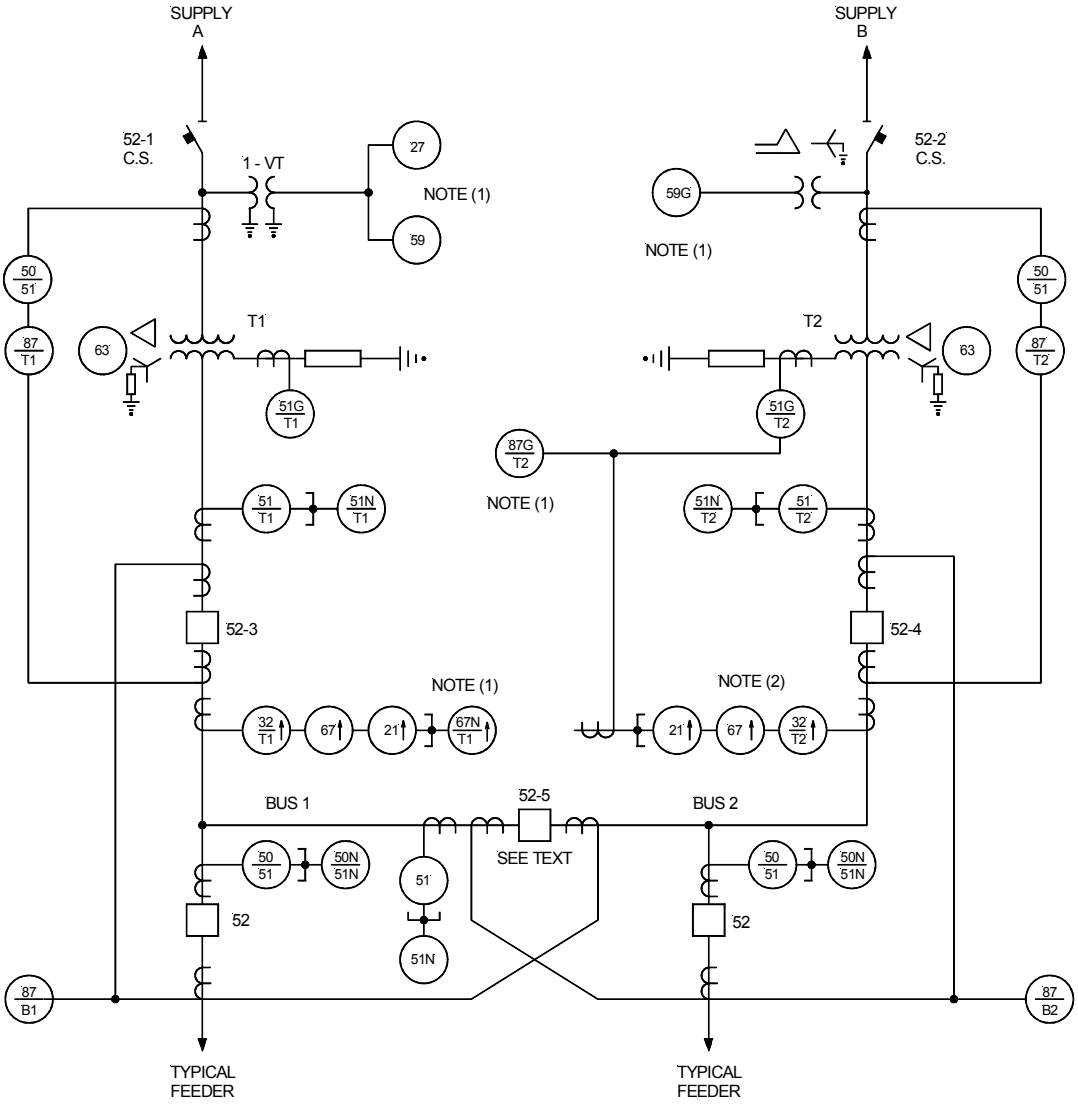

52 CIRCUIT BREAKER/CIRCUIT SWITCHER
C.S. CIRCUIT SWITCHER
27 UNDERVOLTAGE RELAY
59 OVERVOLTAGE RELAY
59G ZERO SEQUENCE OVERVOLTAGE RELAY
87 DIFFERENTIAL RELAY
63 TRANSFORMER SUDDEN-PRESSURE RELAY
50 PHASE-INSTANTANEOUS-OVERCURRENT RELAY
50N GROUND-INSTANTANEOUS-OVERCURRENT RELAY
51 PHASE-TIME-OVERCURRENT RELAY
51N GROUND-TIME-OVERCURRENT RELAY
51G TRANSFORMER NEUTRAL OVERCURRENT RELAY
32 DIRECTIONAL POWER RELAY
67 DIRECTIONAL PHASE OVERCURRENT RELAY
67N DIRECTIONAL GROUND OVERCURRENT RELAY
21 DISTANCE RELAY

NOTES

(1) TWO ALTERNATE PROTECTION SCHEMES ARE ILLUSTRATED IN THIS FIGURE. NORMAL PROTECTION PRACTICES WOULD UTILIZE ONE.

(2) POTENTIAL CONNECTIONS NOT SHOWN

Figure 14—Dual supply from a remote utility substation (dual high-side circuit switcher/dual-transformer configuration)

Copyright © 2003 IEEE. All rights reserved.
Copyright The Institute of Electrical and Electronics Engineers, Inc.
Provided by IHS under license with IEEE
No reproduction or networking permitted without license from IHS
Not for Resale

7.4.1 General description

Many variations may exist with this basic arrangement. The supply line voltage may range from 34.5 kilovolts to 345 kilovolts, and the supply lines may be served from a single bus or be part of a network that interconnects utility substations

Transformer capacity requirements will vary depending on consumer load requirements. If full-capacity plant operation is critical at all times, each transformer should be able to carry the total load. In Figure 14, the transformer connection is assumed to be delta on the high-voltage side and medium resistance-grounded wye on the low-voltage side.

For this example, the low-side bus-tie breaker can be operated normally closed, assuming the utility supply lines originate from the same substation. If the supply lines originate from separate sources, unequal transformer loading or undesirable power flow may occur and it may be necessary to operate the low-side bus-tie breaker normally open. See 4.3 for additional comments concerning low-side bus-tie breaker operation.

7.4.2 Transformer protection

Transformer differential relays (87T) and sudden-pressure relay (63) provide primary protection for transformer faults. These relays trip both the circuit switcher and low-side breaker through separate lockout relays (86). Time and instantaneous-overcurrent relays (50/51) provide backup protection. The latter relays should also trip both the circuit switcher and the low-side breaker, preferably through a lockout relay (see 7.2.3).

With resistance-grounded systems, the ground fault current is often so low that a transformer differential relay will not operate for a single-line-to-ground fault in its zone of protection. Each transformer is equipped with a backup ground overcurrent relay (51GT) in the transformer neutral that responds to this reduced ground fault current. This relay must coordinate with the bus and feeder relaying and will trip after a time delay. Figure 14 illustrates two methods that may be used for high-speed detection of a ground fault in the transformer or in the leads between the transformer and the main breaker. The main breaker of Transformer 1 is equipped with a low-set ground directional overcurrent relay (67N). This relay can be set very sensitive and fast but will not function if the bus-tie breaker (52-5) is open. The second method, used on Transformer T2, utilizes a ground differential relay (87GT2) that compares the neutral current of the transformer with the residual current in the main breaker CT. The ground differential relay must be designed to refrain from operation during heavy external three-phase faults with unequal saturation of the phase CTs. Relays 67N, 87GT, and 51GT trip the associated circuit switcher and the low-side breaker.

7.4.3 Transformer low-side bus and feeder protection

Bus-tie relays (51 and 51N) should be provided and set for the maximum load through the bus-tie breaker with one transformer out of service. The bus-tie relays should coordinate with the relaying on the feeder circuits and the transformer directional overcurrent relays (67). The transformer low-side breakers may be provided with phase time-overcurrent relays (51T) and ground time-overcurrent relays (51NT). These should be set above the maximum load current of one transformer and should coordinate with the bus-tie and feeder breaker relays with the opposite transformer out of service.

The transformer low-side and high-side phase-overcurrent relays (51T and 50/51) are somewhat redundant. The 51T relay trips the low-side breaker, and coordinated settings between it and the 50/51 relay may be preferred to distinguish between internal faults and faults external to the transformer zone of protection.

However, if the additional coordinating time step between 51T and 50/51 is not desired, then the 51T relay may be omitted or can be set to operate at the same time as the 50/51 relays.

Copyright © 2003 IEEE. All rights reserved.

Copyright The Institute of Electrical and Electronics Engineers, Inc.
Provided by IHS under license with IEEE
No reproduction or networking permitted without license from IHS Not for Resale

The transformer high-side instantaneous relays (50) should not respond to faults on the low side of the transformer. Note that no instantaneous-overcurrent relays are permitted on the low-side breakers because time delay is required to coordinate with a downstream fault protective device.

Each low-voltage bus is protected with a set of differential relays, and all breakers connected to the bus require a set of CTs for the differential. As an alternative, the low-voltage buses may also be protected with a partial bus-differential overcurrent relay scheme as discussed in 7.3.3. A ground overcurrent relay should be included in the partial bus-differential scheme because the system is resistance grounded. The low-side transformer relays (51T and 51NT), as well as the bus-tie breaker relays (51 and 51N), may be omitted if the partial bus-differential relay is used.

Feeder phase protection is provided by nondirectional instantaneous and time-overcurrent relays (50/51N). As discussed in 7.1.3, the instantaneous relays should not operate for faults that can be cleared by other downstream protective devices. Their function is high-speed detection of close-in faults. The time-overcurrent relays should coordinate with the largest downstream protective device, and they should be set above the maximum expected full load on the feeder.

Feeder ground protection is also provided by nondirectional instantaneous and time-overcurrent relays (50/51N). On resistance grounded systems, it is often not possible to coordinate the feeder ground relay with downstream fuses.

7.4.4 Protection of the supply line

The utility will normally provide instantaneous operation of the supply line beaker(s) for all line faults. This protective relaying will normally reach into the consumer's transformer but not through it. If the time-delayed phase relays on the supply line can detect low-side faults, they should coordinate with the transformer and low-side protective relays. Supply line ground relays will not operate for low-side faults because the transformer high-side winding is connected delta.

High-magnitude faults in the upper portions of the transformer high-side winding may be expected to trip the line instantaneously. Normally, the transformer relays will also have sufficient time to operate, which permits the isolation of the faulted transformer before the line is automatically reenergized.

Faults in the transformer, low-voltage leads, or on the transmission line should also be cleared from the load bus as quickly as possible. If the low-voltage bus-tie breaker closed, each transformer low-side breaker should have a set of directional overcurrent relays (67). These relays respond to faults in the direction of the transformer and supply line. The phase-directional relays should have a pickup setting of 25% to 50% of the transformer rating and operate as fast as possible, but with enough time delay to coordinate with other relays on the utility system. The consumer and utility should agree on the operating time. A moderately inverse-time characteristic is suggested for this application. The directional relays should have a thermal or continuous current rating equal to or greater than the maximum transformer load and the phase angle characteristic should prevent tripping on reactive power flowing from the consumer toward the utility. If this is a problem, consideration should be given to using relays with a 45° maximum torque angle instead of the usual 30° torque angle, or increasing the relay pickup setting.

If it is desirable to clear line faults faster in order to reduce the duration of the voltage dip on the load bus during phase faults, zone-one (instantaneous) distance relays (21) may be applied where the line length and arrangement permit. A distance relay connected on the low side of the power transformer will include the transformer in its protective zone; therefore, the impedance of the transformer and, depending on the type of relay used, the transformer connection must be considered in evaluating the reach of the relay. However, if the transformer size is relatively small or the line short, there may be little, if any, zone-one coverage of the line. Greater high-voltage line coverage can be obtained by connecting the distance relay to high-side VTs, so that impedance measurement is made from the transformer high-voltage terminals rather than from the low-voltage bus. Relay current can be obtained from the low-voltage breaker so as to retain the transformer

Copyright © 2003 IEEE. All rights reserved.
Copyright The Institute of Electrical and Electronics Engineers, Inc.
Provided by IHS under license with IEEE
No reproduction or networking permitted without license from IHS
Not for Resale

and leads in the relay zone and allow the relay to operate for some transformer faults. The relay impedance measurement is made from the point of the voltage measurement, but direction is sensed from the point of current measurement. If distance relays are applied to a delta-wye transformer, using high-side voltage and low-side current, then a 30° phase shift must be introduced in either the voltage or current circuit to compensate for the 30° phase shift through the transformer. A delta-connected CT circuit will accomplish this and avoid the possible malfunction of some impedance relays for low-side system ground faults.

A very sensitive power directional relay, designed to operate on the transformer exciting current losses, may be applied to deenergize the transformer and prevent back feed when the utility source is disconnected. This may occur as a result of a ground fault on the utility line where there is no ground fault current contribution from the consumer substation due to the high-side delta-connected transformer winding. Time delay should be used with the sensitive power directional relays to avoid undesired tripping for reverse power flow during faults on the utility system. Some high-efficiency transformers may not have enough core losses to operate a directional power relay. In these cases, it will be necessary to reconnect or modify the relay so that it will trip when the power is reduced to zero or a low level of incoming power.

For greater reliability and minimum disturbance, the two supply lines should not originate from the same bus. As discussed in 7.4.1, it may be necessary to operate with the bus tie open for this condition. If the low-voltage tie is closed with service from different utility substations, heavy utility loading can result a small amount of power flow through the low-voltage bus (in one transformer and out the other) at times when the consumer load is light. This may cause an operation of the power directional relay on the breaker that has outgoing power. The amount of load required on the consumer substation bus to avoid this undesirable operation depends on the connections and load flow pattern of the utility lines. Other methods, such as ground detection or transfer trip, may also be used to detect the loss of the supply line with the bus tie closed.

Permanent ground faults on the utility line may be detected by a zero-sequence overvoltage relay (59G) connected in the broken-delta secondary of VTs on the high side of the power transformer as shown on Figure 15. It can also be detected by zero-sequence overvoltage elements in a three-phase microprocessor relay using VTs connected wye-wye. An alternative method is undervoltage and overvoltage relays (27, 59) connected to a VT that is connected one phase to ground. The VT will be exposed to full line-to-line voltage for some supply line ground faults. This should be considered when determining its primary voltage rating. The relays should be set for a safe margin below (80%–85% for relay 27) and above (115%–120% for relay 59) the normal line-to-ground voltage. The time setting should be independent of the voltage setting and should be just sufficient to coordinate with ground fault relaying at the utility source bus.

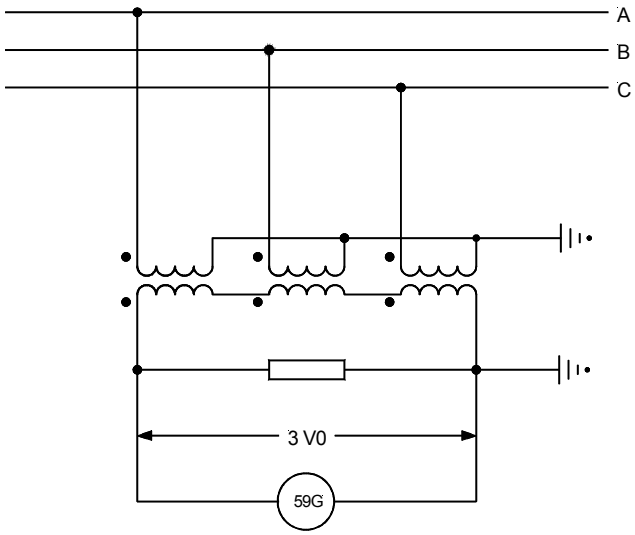

Figure 15—Ground fault detection

Copyright © 2003 IEEE. All rights reserved.

Copyright The Institute of Electrical and Electronics Engineers, Inc.
Provided by IHS under license with IEEE
No reproduction or networking permitted without license from IHS Not for Resale

The requirement for a high-side voltage source adds to the cost unless it is also used for other purposes, such as metering. Transformer bushing voltage devices are a relatively low-cost option, and it may be used with bushings of 115 kV and above. CVTs may also be used. Resistance voltage devices may also be used but should be rated for line-to-line voltage, or operated at reduced voltage to avoid flashover of the protective gap at line-to-line voltage when one phase is grounded. If VTs are used, consideration should be given to the possibility of ferroresonance when the line switch is open and the transformer energized from the low side. A VT secondary resistance burden will usually solve this problem. The available voltage signal should be matched to the requirements of the protective relays, whether voltage, distance, directional overcurrent, or power directional. Auxiliary VTs may be required in some cases.

If the two supply lines originate at the same remote utility substation, a fault on either line, or other line connected to the same utility substation bus, will result in depressed voltage at the consumer bus until that fault is cleared from both the utility and consumer buses. The consumer substation relaying may not function until after the first utility breaker has cleared. This is known as sequential clearing of the consumer's breaker. If high-speed and simultaneous clearing of the utility and consumer terminals is required, direct transfer trip or another pilot relaying scheme is necessary. Where direct transfer tripping is used, relays at the utility terminal key a transfer trip transmitter to send a signal to the consumer that will trip the low-voltage main breaker (52-3 or 52-4). It is usually desirable to supervise direct transfer tripping with a local fault-detector to minimize the possibility of a false operation due to a spurious transfer-trip signal. As there may be no fault current flow though the low-voltage bus until after the utility breaker has opened, instantaneous voltage relays are required to obtain high-speed supervision of the transfer-trip signal.

Undervoltage transfer-trip supervision relays that are connected to measure line-to-line voltage on the high side of the power transformer may be set low for improved security. A separate zero-sequence overvoltage relay is required in this case to operate for high-side line-to-ground faults. As an alternative, three undervoltage relays connected to measure line-to-neutral voltage on the high side of the power transformer can be used to detect both phase and ground faults. However, because a line-to-line fault collapses the line-to-neutral voltage to only 50%, the dropout setting of these relays must be well above 50% of the normal voltage.

If there is no generation present at the consumer substation, increased security against false tripping may be obtained by interlocking the line relaying of each breaker through a 52a switch of the opposite breaker. Therefore, when one transformer is out of service, the second cannot be falsely tripped. If, however, generation is present that requires tripping of a single-source transformer for a line fault, such an interlock cannot be used.

If the consumer station process requirements are critical and high-speed relaying is required, it will be necessary for the consumer to negotiate with the utility for the installation of pilot relaying (assuming that utility system does not otherwise require pilot relaying of the supply line). However, it should be recognized that the addition of complex equipment increases maintenance requirements and the possibility of malfunction. The consumer should, therefore, review the plant process to determine if changes can be made, which will increase the tolerance to disturbances on the high-voltage supply line.

7.5 Supply to a remote nonutility substation with generation

Figure 16 shows a simple example of this type of interconnection for a small generator.

7.5.1 General description

Consumer interconnections to utilities are made more complicated with the addition of consumer-owned generation facilities. The choice of relays and their placement must be made to ensure adequate protection of both the generator and the interface. The protection of small generators will be accomplished by a minimal investment in relay protection. Large generators require a full complement of generator relays (see IEEE Std C37.102™-1995 [B3]). In addition, the location of larger generators on the utility system may not

Copyright © 2003 IEEE. All rights reserved.
Copyright The Institute of Electrical and Electronics Engineers, Inc.
Provided by IHS under license with IEEE
No reproduction or networking permitted without license from IHS
Not for Resale

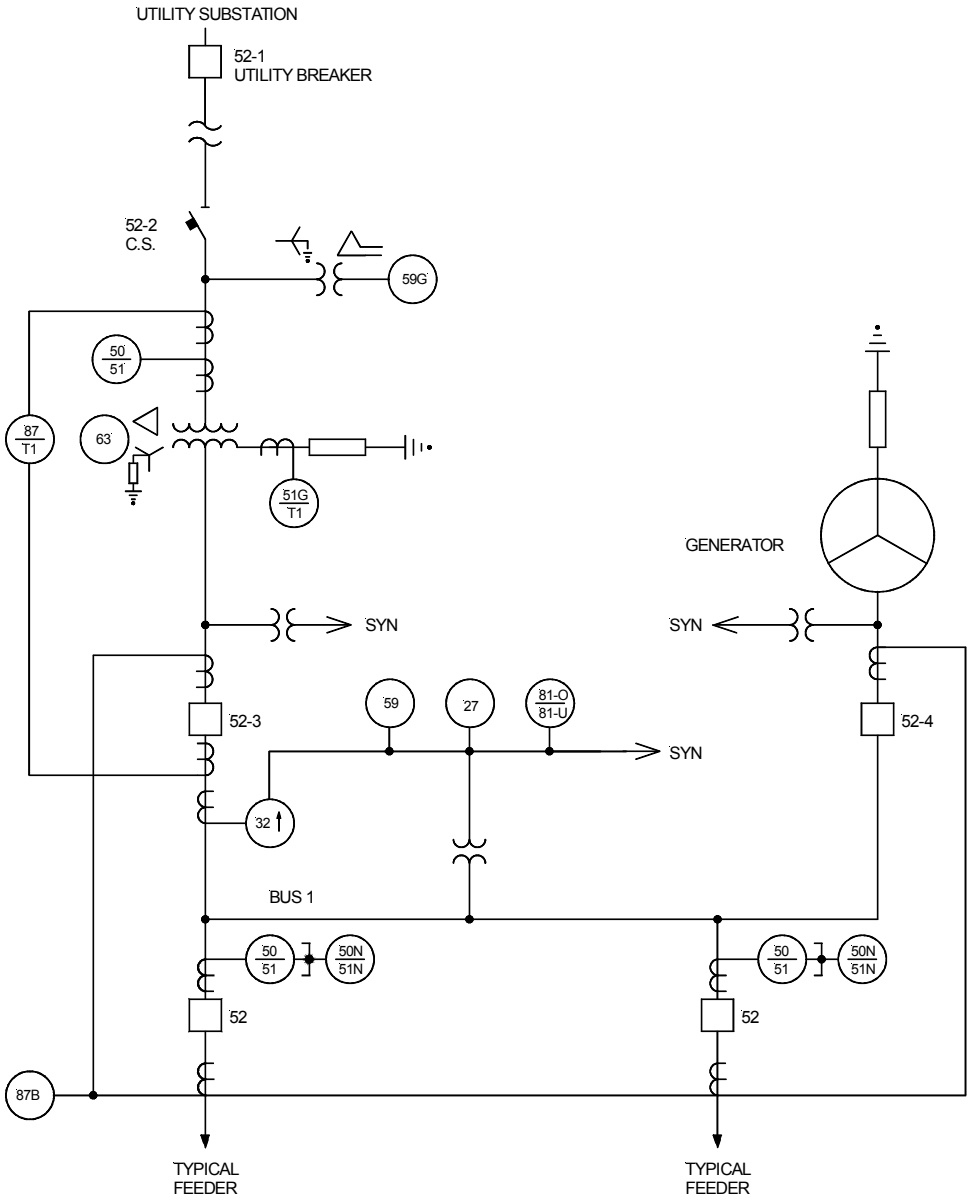

52 CIRCUIT BREAKER/CIRCUIT SWITCHER
C.S. CIRCUIT SWITCHER
32 DIRECTIONAL POWER RELAY
27 UNDERVOLTAGE RELAY
59 OVERVOLTAGE RELAY
59G ZERO SEQUENCE OVERVOLTAGE RELAY
87T TRANSFORMER DIFFERENTIAL
63 TRANSFORMER SUDDEN-PRESSURE RELAY
50 PHASE-INSTANTANEOUS-OVERCURRENT RELAY
50N GROUND-INSTANTANEOUS-OVERCURRENT RELAY
51 PHASE-TIME-OVERCURRENT RELAY
51G TRANSFORMER NEUTRAL OVERCURRENT RELAY
51N GROUND-TIME-OVERCURRENT RELAY
87B BUS DIFFERENTIAL RELAY
81-0 OVER-FREQUENCY RELAY
81-U UNDER-FREQUENCY RELAY

Figure 16—Supply to a remote non-utility substation with generation

Copyright © 2003 IEEE. All rights reserved.

Copyright The Institute of Electrical and Electronics Engineers, Inc.
Provided by IHS under license with IEEE
No reproduction or networking permitted without license from IHS
Not for Resale

be optimized for large power flows or bidirectional flow and may require changes to the utility transmission system.

Figure 16 is an example of a small generator connected to a consumer substation in a simple configuration. The example shows the generator connected to a low-side bus in parallel with a consumer load, which is typical of a small unit. The low-side wye connection of the transformer provides a ground point to the customer load even if the generator is disconnected. The disadvantage is in the fact that operation of remote utility substation breakers may isolate this substation with part of the utility system that leaves the high-voltage system ungrounded. Steps taken to ensure that this generator can be removed from high-side faults are discussed in 7.5.4.

Detecting ground faults is not a problem with large generators because they are usually installed with their own wye-delta transformer, are separate from the consumer load, and are protected by high-voltage breakers.

7.5.2 Transformer protection

The example in Figure 16 shows a transformer protected by differential (87T), sudden-pressure (63), high-side overcurrent (50/51), and neutral ground (51G) relays. With a smaller transformer, the circuit switcher and the differential relays could be replaced with high-side fuses and the overcurrent relays (50/51) moved to the low side of the transformer.

7.5.3 Transformer low-side bus and feeder protection

The low-side bus can be incorporated in the protective zone of the transformer differential relays (87T). If the generator has sufficient capacity to carry the plant load when separated from the utility system, the transformer differential zone can be limited to the transformer and a set of bus differential relays (87B) installed as shown on Figure 16.

Backup protection for both the bus and the feeders will be provided by the transformer overcurrent relays (50/51) and (51G). The settings on these back up relays must be coordinated with the overcurrent relays, which protect the feeder (50/51) and (50N/51N).

7.5.4 Protection of the supply line

The basic protection of the supply line has been detailed in previous examples. For this example, the emphasis will be to ensure that the generator will be separated from a supply line fault. A simple solution to supply line protection is to apply direct transfer trip from the utility substation. This can be a costly option that does not reduce the need for relays at the local substation. When the consumer does not supply power to the utility, a directional power relay (32) can be used that will operate for any power flow to the utility system. If the utility buys power from the consumer, however, the reverse power relay cannot be used. In addition, undervoltage relays (27), overvoltage relays (59), and over/underfrequency relays (81) are usually required by the utility. These relays are necessary to prevent excessive frequency and voltage excursions in the event the utility's supply substation breakers open and isolates the consumer's generation with part of the utility's load.

Additional phase and ground fault relays may also be required depending on the size of the unit. For instance, in the example shown on Figure 16, zero-sequence voltage relays are required to detect high-voltage ground faults because the transformer has a high-side delta connection. This protection is discussed in 7.3.4 and 7.4.4. It should be noted, however, that temporary ground faults on the utility line may not be cleared by the zero-sequence overvoltage relays (59G). Assuming no other ground sources on the utility line, a temporary ground fault on the supply will self extinguish once the remote utility breaker (52-1) opens unless there is sufficient system capacitance to maintain the arc. This can occur before the 59G relay operates because it will normally have a time delay, in which case the consumer's substation will not be

Copyright © 2003 IEEE. All rights reserved.
Copyright The Institute of Electrical and Electronics Engineers, Inc.
Provided by IHS under license with IEEE
No reproduction or networking permitted without license from IHS
Not for Resale

separated from the supply line. If there is unchecked automatic reclosing at the utility terminal, there is a risk of closing out-of-phase with the possibility of generator damage.

7.5.5 Synchronizing

In most cases, the consumer is responsible for the operation of any nonutility generation, including returning the system to normal following a planned or inadvertent outage. Operating procedures for energizing the system and synchronizing the nonutility generation must, however, be established jointly with the utility to meet the requirements of both parties with respect to safety, reliability, and operating flexibility. These procedures should be used in conjunction with interlocks and check relays as required, to minimize possible operator errors.

For the example shown on Figure 16, both Breakers 52-3 and 52-4 should be equipped with facilities to synchronize the nonutility generator to the system. Dead-line and synchronism check relays should be used on Breaker 52-1, and consideration should be given to electrical interlocks between Circuit Switcher 52-2 and Breaker 52-3. This permits the following procedures:

a) Breakers 52-1, 52-3, and Circuit Switcher 52-2 should trip for any fault on the supply line.
b) Breaker 52-1 should be closed once it is confirmed that the line is deenergized.
c) Circuit Switcher 52-2 may be closed if Breaker 52-3 is open.
d) If the nonutility generator is in service and Bus 1 is energized, then Breaker 52-3 may be synchronized and closed by the consumer.
e) If Bus 1 is deenergized and Breaker 52-4 is open, Breaker 52-3 may be closed. The consumer may bring the generator on-line by synchronizing and closing Breaker 52-4.

A similar procedure would be used following a planned outage.

Copyright © 2003 IEEE. All rights reserved.

Copyright The Institute of Electrical and Electronics Engineers, Inc.
Provided by IHS under license with IEEE
No reproduction or networking permitted without license from IHS Not for Resale

Annex A

(informative)

Bibliography

[B1] ANSI C2-2002, National Electrical Safety Code® (NESC®), American National Standards Institute.

[B2] IEEE Std C37.91-2000, IEEE Guide for Protective Relay Applications to Power Transformers.[5]

[B3] IEEE Std C37.102-1995, IEEE Guide for AC Generator Protection.

[B4] IEEE Std C37.110-1996, IEEE Guide for the Application of Current Transformers Used for Protective Relaying Purposes.

[B5] IEEE Std C57.13-1993, IEEE Standard Requirements for Instrument Transformers.

[B6] IEEE Std C57.105-1978 (Reaff 1999), IEEE Guide for Application of Transformer Connections in Three-Phase Distribution Systems.

[B7] IEEE Std 80-2000, IEEE Guide for Safety in AC Substation Grounding.

[B8] IEEE 100, *The Authoritative Dictionary of IEEE Standards Terms*, Seventh Edition.

[B9] IEEE Std 141-1993 (Reaff 1999), IEEE Recommended Practice for Electric Power Distribution for Industrial Plants (*IEEE Red Book*).

[B10] IEEE Std 241-1990 (Reaff 1997), IEEE Recommended Practice for Electric Power Systems in Commercial Buildings (*IEEE Grey Book*).

[B11] IEEE Std 242-2001, IEEE Recommended Practice for Protection and Coordination of Industrial and Commercial Power Systems (*IEEE Buff Book*).

[B12] IEEE Std 519-1992, IEEE Recommended Practices and Requirements for Harmonic Control in Electric Power Systems.

[B13] ITI (CBEMA) Curve, Published by Technical Committee 3 of the Information Technology Industry Council.

[B14] NFPA 70-1999, National Electrical Code® (NEC®).[6]

[5]The IEEE standards or products referred to in Annex A are trademarks of the Institute of Electrical and Electronics Engineers, Inc.

[6]NFPA publications are available from Publications Sales, National Fire Protection Association, 1 Batterymarch Park, P.O. Box 9101, Quincy, MA 02269-9101, USA.

Copyright © 2003 IEEE. All rights reserved.

Copyright The Institute of Electrical and Electronics Engineers, Inc.
Provided by IHS under license with IEEE
No reproduction or networking permitted without license from IHS

Not for Resale