IEEE Std C37.93™-2004
(Revision of
IEEE Std C37.93-1987)

IEEE Standards

C37.93™

IEEE Guide for Power System Protective Relay Applications of Audio Tones Over Voice Grade Channels

IEEE Power Engineering Society

Sponsored by the
Power System Relaying Committee

IEEE

3 Park Avenue, New York, NY 10016-5997, USA

16 August 2004

Print: SH95228
PDF: SS95228

Copyright The Institute of Electrical and Electronics Engineers, Inc.
Provided by IHS under license with IEEE
No reproduction or networking permitted without license from IHS

Not for Resale

IEEE Std C37.93™-2004
(Revision of
IEEE Std C37.93-1987)

IEEE Guide for Power System Protective Relay Applications of Audio Tones Over Voice Grade Channels

Sponsor

Power Systems Relaying Committee
of the
IEEE Power Engineering Society

Approved 25 March 2004

IEEE-SA Standards Board

Abstract: Guidelines for applying audio tones over voice grade channels for power system relaying are provided in this document, including transmitting and receiving equipment, leased voice grade channels, application principles, installation, and testing. The primary purpose of this document is to guide the power system user in applying, installing, and operating audio-tone protective relaying systems over voice grade channels. Secondly, it is to provide a reference for equipment manufacturers engaged in the design and application of relaying equipment and for telephone personnel engaged in providing telecommunications channels for audio-tone protective relay schemes.
Keywords: audio tone, dependability, frequency shift keying, power system, protective relaying, security, telephone circuits, teleprotection, voice grade channels

---

The Institute of Electrical and Electronics Engineers, Inc.
3 Park Avenue, New York, NY 10016-5997, USA

Copyright © 2004 by the Institute of Electrical and Electronics Engineers, Inc.
All rights reserved. Published 16 August 2004. Printed in the United States of America.

IEEE is a registered trademark in the U.S. Patent & Trademark Office, owned by the Institute of Electrical and Electronics Engineers, Incorporated.

Print: ISBN 0-7381-4013-9 SH95228
PDF: ISBN 0-7381-4014-7 SS95228

No part of this publication may be reproduced in any form, in an electronic retrieval system or otherwise, without the prior written permission of the publisher.

Copyright The Institute of Electrical and Electronics Engineers, Inc.
Provided by IHS under license with IEEE
No reproduction or networking permitted without license from IHS
Not for Resale

IEEE Standards documents are developed within the IEEE Societies and the Standards Coordinating Committees of the IEEE Standards Association (IEEE-SA) Standards Board. The IEEE develops its standards through a consensus development process, approved by the American National Standards Institute, which brings together volunteers representing varied viewpoints and interests to achieve the final product. Volunteers are not necessarily members of the Institute and serve without compensation. While the IEEE administers the process and establishes rules to promote fairness in the consensus development process, the IEEE does not independently evaluate, test, or verify the accuracy of any of the information contained in its standards.

Use of an IEEE Standard is wholly voluntary. The IEEE disclaims liability for any personal injury, property or other damage, of any nature whatsoever, whether special, indirect, consequential, or compensatory, directly or indirectly resulting from the publication, use of, or reliance upon this, or any other IEEE Standard document.

The IEEE does not warrant or represent the accuracy or content of the material contained herein, and expressly disclaims any express or implied warranty, including any implied warranty of merchantability or fitness for a specific purpose, or that the use of the material contained herein is free from patent infringement. IEEE Standards documents are supplied "**AS IS**."

The existence of an IEEE Standard does not imply that there are no other ways to produce, test, measure, purchase, market, or provide other goods and services related to the scope of the IEEE Standard. Furthermore, the viewpoint expressed at the time a standard is approved and issued is subject to change brought about through developments in the state of the art and comments received from users of the standard. Every IEEE Standard is subjected to review at least every five years for revision or reaffirmation. When a document is more than five years old and has not been reaffirmed, it is reasonable to conclude that its contents, although still of some value, do not wholly reflect the present state of the art. Users are cautioned to check to determine that they have the latest edition of any IEEE Standard.

In publishing and making this document available, the IEEE is not suggesting or rendering professional or other services for, or on behalf of, any person or entity. Nor is the IEEE undertaking to perform any duty owed by any other person or entity to another. Any person utilizing this, and any other IEEE Standards document, should rely upon the advice of a competent professional in determining the exercise of reasonable care in any given circumstances.

Interpretations: Occasionally questions may arise regarding the meaning of portions of standards as they relate to specific applications. When the need for interpretations is brought to the attention of IEEE, the Institute will initiate action to prepare appropriate responses. Since IEEE Standards represent a consensus of concerned interests, it is important to ensure that any interpretation has also received the concurrence of a balance of interests. For this reason, IEEE and the members of its societies and Standards Coordinating Committees are not able to provide an instant response to interpretation requests except in those cases where the matter has previously received formal consideration. At lectures, symposia, seminars, or educational courses, an individual presenting information on IEEE standards shall make it clear that his or her views should be considered the personal views of that individual rather than the formal position, explanation, or interpretation of the IEEE.

Comments for revision of IEEE Standards are welcome from any interested party, regardless of membership affiliation with IEEE. Suggestions for changes in documents should be in the form of a proposed change of text, together with appropriate supporting comments. Comments on standards and requests for interpretations should be addressed to:

Secretary, IEEE-SA Standards Board
445 Hoes Lane
P.O. Box 1331
Piscataway, NJ 08855-1331USA

NOTE—Attention is called to the possibility that implementation of this standard may require use of subject matter covered by patent rights. By publication of this standard, no position is taken with respect to the existence or validity of any patent rights in connection therewith. The IEEE shall not be responsible for identifying patents for which a license may be required by an IEEE standard or for conducting inquiries into the legal validity or scope of those patents that are brought to its attention.

Authorization to photocopy portions of any individual standard for internal or personal use is granted by the Institute of Electrical and Electronics Engineers, Inc., provided that the appropriate fee is paid to Copyright Clearance Center. To arrange for payment of licensing fee, please contact Copyright Clearance Center, Customer Service, 222 Rosewood Drive, Danvers, MA 01923 USA; +1 978 750 8400. Permission to photocopy portions of any individual standard for educational classroom use can also be obtained through the Copyright Clearance Center.

Copyright The Institute of Electrical and Electronics Engineers, Inc.
Provided by IHS under license with IEEE
No reproduction or networking permitted without license from IHS
Not for Resale

Introduction

(This introduction is not part of IEEE Std C37.93-2004, IEEE Guide for Power System Protective Relay Applications of Audio Tones Over Voice Grade Channels.)

This guide, which was last revised in 1987, recognized the reliability demands placed on audio-tone relaying equipment and the associated telephone facilities. The challenges for providing reliable (secure and dependable), high-speed pilot protection have increased enormously over the years. These challenges have occurred as power systems are operated closer to design limits due to economic, environmental, and regulatory considerations.

This revision, IEEE Std C37.93-2004, retains the original intent of providing a reference for manufacturers, designers, and users of audio-tone equipment and for providers of the telecommunication channels employed with the audio-tone protective relay schemes. It was prepared not only for those using an audio-tone relay system for the first time, but also as a reference for the experienced user.

IEEE Std C37.93-2004 includes more information on utility-owned telecommunications equipment than the previous revision. More multiplexing equipment is being used by the utilities for digital transmission over fiber and microwave. This revision has more detailed information regarding these types of systems. Noise characteristics of digital systems are different from analog, and their effect is covered in this revision.

This guide provides a basic introduction and description of leased telephone channels. Also included are typical interface requirements and the transmission line characteristics of three channel offerings, along with examples. Since other IEEE standards cover the subject of protection more comprehensively, a brief description of special protection devices is provided for informational purposes. Clauses have been revised to be consistent with current telephone company practices, and the subclause concerning periodic maintenance has been expanded.

Acknowledgments

This revision was prepared by the Audio Tone Guide Working Group of the Relaying Channels Subcommittee, Power Systems Relaying Committee of the IEEE Power Engineering Society. The review by the Power Systems Communication Committee of the IEEE Power Engineering Society and the Transmission Systems Committee of the IEEE Communication Society are greatly appreciated. The Working Group is indebted to its members, past and present, who as members of the Power System Relaying Committee and other liaison Committees and Groups, contributed their experience and knowledge.

Patents

Attention is called to the possibility that implementation of this standard may require use of subject matter covered by patent rights. By publication of this standard, no position is taken with respect to the existence or validity of any patent rights in connection therewith. The IEEE shall not be responsible for identifying patents or patent applications for which a license may be required by to implement an IEEE standard or for conducting inquiries into the legal validity or scope of those patents that are brought to its attention.

Copyright © 2004 IEEE. All rights reserved.

Copyright The Institute of Electrical and Electronics Engineers, Inc.
Provided by IHS under license with IEEE
No reproduction or networking permitted without license from IHS
Not for Resale

Notice to users

Errata

Errata, if any, for this and all other standards can be accessed at the following URL: http://standards.ieee.org/reading/ieee/updates/errata/index.html. Users are encouraged to check this URL for errata periodically.

Interpretations

Current interpretations can be accessed at the following URL: http://standards.ieee.org/reading/ieee/interp/index.html.

Participants

At the time this guide was completed, the Audio Tone Guide Working Group had the following membership:

William Higinbotham, *Chair*
Jerry Hohn, *Vice Chair*

Doug Dawson	John Horwath	Mark Simon
Kenneth Fodero	Chris Huntley	Veseun Skendzic
Jeff Gilbert	Tim Phillippe	D. Wardlow
	Roger Ray	

The following members of the individual balloting committee voted on this guide. Balloters may have voted for approval, disapproval, or abstention.

William Ackerman	Jerry Hohn	Anthony Napikoski
Steve Alexanderson	Edward Horgan, Jr.	Roger Ray
George Bartok	James D. Huddleston, III	Charles Rogers
Kenneth Behrendt	Chris Huntley	James Ruggieri
Stuart Bouchey	James Ingleson	Mohindar S. Sachdev
Gustavo Brunello	David Jackson	Tony Seegers
Terry Burns	Joseph L. Koepfinger	Mark Simon
Ronald Daubert	William Lowe	James Teague
Paul Drum	Gregory Luri	John T. Tengdin
Gary Engmann	Jesus Martinez	Demetrios Tziouvaras
Kenneth Fodero	Jeff McElray	Philip Winston
William Higinbotham	Gary Michel	Zhenxue Xu
	Brian Mugalian	

Copyright © 2004 IEEE. All rights reserved.
Copyright The Institute of Electrical and Electronics Engineers, Inc.
Provided by IHS under license with IEEE
No reproduction or networking permitted without license from IHS
Not for Resale

When the IEEE-SA Standards Board approved this guide on 25 March 2004, it had the following membership:

Don Wright, *Chair*
Steve M. Mills, *Vice Chair*
Judith Gorman, *Secretary*

Chuck Adams
H. Stephen Berger
Mark D. Bowman
Joseph A. Bruder
Bob Davis
Roberto de Boisson
Julian Forster*
Arnold M. Greenspan
Mark S. Halpin
Raymond Hapeman
Richard J. Holleman
Richard H. Hulett
Lowell G. Johnson
Joseph L. Koepfinger*
Hermann Koch
Thomas J. McGean
Daleep C. Mohla
Paul Nikolich
T. W. Olsen
Ronald C. Petersen
Gary S. Robinson
Frank Stone
Malcolm V. Thaden
Doug Topping
Joe D. Watson

*Member Emeritus

Also included are the following nonvoting IEEE-SA Standards Board liaisons:

Satish K. Aggarwal, *NRC Representative*
Richard DeBlasio, *DOE Representative*
Alan Cookson, *NIST Representative*

Savoula Amanatidis
IEEE Standards Managing Editor

Copyright © 2004 IEEE. All rights reserved.

Copyright The Institute of Electrical and Electronics Engineers, Inc.
Provided by IHS under license with IEEE
No reproduction or networking permitted without license from IHS
Not for Resale

Contents

1. Overview 1

1.1 Scope 1
1.2 Purpose 1

2. References 1

3. Transmitting and receiving equipment 2

3.1 Relaying requirements 2
3.2 Basic types of audio-tone systems 3
3.3 Power supplies 4
3.4 Equipment protection from surge phenomena 4
3.5 Tone level meter 5
3.6 Frequency translation protection 5

4. Voice grade channels 6

4.1 Introduction 6
4.2 Need for joint discussions 6
4.3 Characteristics of voice grade channels 7
4.4 Private networks 17

5. Application principals 18

5.1 Audio-tone relaying systems 18
5.2 Mode of operation 23
5.3 Signal and channel arrangements 23
5.4 Signal transmission 30
5.5 Operating time of the system 31
5.6 Noise and noise suppression 32

6. Installation and testing 35

6.1 Installation considerations 35
6.2 Testing 36
6.3 Periodic maintenance 37

Annex A (informative) Bibliography 38

Annex B (informative) Example of audio-tone circuit considerations 39

Annex C (informative) Signal level measurements and terms 41

Copyright © 2004 IEEE. All rights reserved.

Copyright The Institute of Electrical and Electronics Engineers, Inc.
Provided by IHS under license with IEEE
No reproduction or networking permitted without license from IHS
Not for Resale

IEEE Guide for Power System Protective Relay Applications of Audio Tones Over Voice Grade Channels

1. Overview

1.1 Scope

This guide contains information and recommendations for applying audio tones over voice grade channels for power system relaying, including transmitting and receiving equipment, leased voice grade channels, application principles, installation, and testing. Reflected in this guide is the knowledge and experience of equipment manufacturers and telephone companies as well as that of power utility users.

This guide is not intended to supplant specific or general instructions contained in the manufacturers' instruction books or in any contractual agreement between a manufacturer or telephone company(s) or both and a purchaser of a given relaying system. The figures in 4.3 are used for illustrative purposes only and do not represent the preferred protection under all conditions.

1.2 Purpose

The primary purpose of this document is to guide the power system user in applying, installing, and operating audio-tone protective relaying systems over voice grade channels. Secondly, it is to provide a reference for equipment manufacturers engaged in the design and application of relaying equipment and for telephone personnel engaged in providing telecommunications channels for audio-tone protective relay schemes. The guide has been prepared not only for those considering audio-tone relaying for the first time, but as a reference for the experienced.

2. References

This guide shall be used in conjunction with the following standards. When the following standards are superseded by an approved revision, the revision shall apply.

Copyright © 2004 IEEE. All rights reserved.

Copyright The Institute of Electrical and Electronics Engineers, Inc.
Provided by IHS under license with IEEE
No reproduction or networking permitted without license from IHS
Not for Resale

IEEE Std 367™-1996 (Reaff 2002), IEEE Recommended Practice for Determining the Electric Power Station Ground Potential Rise and Induced Voltage from a Power Fault.[1,2]

IEEE Std 487™-2000, IEEE Recommended Practice for the Protection of Wire-Line Communication Facilities Serving Electric Supply Locations.

IEEE Std C37.90™-1989 (Reaff 1994), IEEE Standard Relays and Relay Systems Associated with Electric Power Apparatus.

IEEE Std C37.90.1™-2002, IEEE Standard for Surge Withstand Capability (SWC) Tests for Relays and Relay Systems Associated with Electric Power Apparatus.

IEEE Std C37.90.2™-1995 (Reaff 2001), IEEE Standard for Withstand Capability of Relay Systems to Radiated Electromagnetic Interference from Transceivers.

3. Transmitting and receiving equipment

3.1 Relaying requirements

3.1.1 Receiver response

Receiver response is essential in ensuring correct operation of an audio-tone relay scheme. It is most important that receivers be capable of discriminating between valid signals and spurious signals which may be introduced into the voice-grade audio channels particularly during power system disturbances

3.1.2 Security/dependability/speed

The three characteristics—security, dependability, and speed—comprise the core requirements of any teleprotection system. Security, the assurance that false tripping will not occur, can be highly desired in some applications. In applications like direct transfer tripping, false trips can have disastrous effects. Other applications, like unblocking, favor dependability, the assurance that valid tripping will occur, because the effect of missing a trip is more serious. Speed, or trip time, can be the ultimate requirement in other applications. Each application must be examined because it is difficult, or often impossible, to improve security, dependability, or speed without adversely affecting the other characteristics.

3.1.3 General requirements

Equipment designed for relaying functions and for use with available types of voice-grade audio communication circuits should meet the following requirements:

The operate time should be consistent with the relay application requirements, but in the interest of security, the tone operate time should not be any faster than necessary, typically 10–16 ms. This includes tone transmitter operation time (after being keyed), tone receiver response time, and operate time of an output device. This does not include voice-grade audio channel delay time, which may vary from a few milliseconds to more than 10 ms. Accordingly, in writing audio-tone terminal equipment specifications, the user should exclude voice grade-audio channel delay time when specifying required speed, since this time is not under the control of the tone equipment manufacturer.

[1]The IEEE standards or products referred to in this clause are trademarks of the Institute of Electrical and Electronics Engineers, Inc.

[2]IEEE publications are available from the Institute of Electrical and Electronics Engineers, Inc., 445 Hoes Lane, Piscataway, NJ 08854, USA (http://standards.ieee.org/).

 --`,,,,,,-`-`,,`,,`,`,,`---
Copyright © 2004 IEEE. All rights reserved.

Copyright The Institute of Electrical and Electronics Engineers, Inc.
Provided by IHS under license with IEEE
No reproduction or networking permitted without license from IHS Not for Resale

The highest possible security for the following conditions should be considered:

a) Steady-state noise equal in magnitude to the signal over the voice frequency bandwidth
b) Failure of the monitoring signal
c) Intermittent shorting, opening, or grounding of the communication circuit
d) Complete interruption of the communication circuit
e) Crosstalk from an adjacent circuit
f) Inadvertent application of test signals normally encountered in channel testing
g) Power system disturbances
h) Removal and application of power supply
i) Multiplex or carrier frequency translations
j) Single component failure
k) Voltage transients in power supply and output circuits
l) Electromagnetic interference (EMI) and radio frequency interference (RFI) effects
m) Physical substation environment

3.2 Basic types of audio-tone systems

3.2.1 General

The equipment to meet the relaying requirements may take any of several forms. The importance of the function requires that the user be assured of a workable system on a continuous basis with an alarm to indicate an inoperative condition. Each type of equipment has both advantages and disadvantages.

3.2.2 Frequency shift modulated equipment

This equipment is the type most frequently used. A signal is always present under normal conditions on one of two possible frequencies, guard or trip. Frequency shift equipment is inherently self-monitoring when the design is such that the same components generate, amplify, and receive both frequencies. Some frequency shift equipment also employs an enhanced trip signal so that the signal-to-noise ratio (SNR) is improved at the time of trip signal transmission (see 4.3.2.1). This increase in signal power during enhanced signaling trip typically lasts for 50–100 ms.

3.2.3 ON-OFF modulated equipment

ON-OFF equipment is not inherently self-monitoring because many components are inactive in their quiescent state. If the scheme utilizes more than one tone signal, the circuit can be designed for periodic in-service testing. This type of equipment is presently applicable only to blocking type relaying systems.

3.2.4 Coded pulse signaling

Coded pulse signaling is another mode of signal applicable to relay functions employing frequency shift or ON-OFF modulation for signal transmission. The signal is keyed in a time sequence to form a code composed of marks and spaces.

Coded pulse equipment appears to offer great security against false operation due to interference. Coded pulse systems require greater channel bandwidths for the same operating speed than do the basic frequency shift or ON-OFF systems. This factor should be considered in view of the frequency range of the voice-grade audio channel and the overall function of the equipment.

Copyright © 2004 IEEE. All rights reserved.

--`,,,

3.2.5 Phase-shift keying modulated equipment

The form of phase modulation in which the modulating function shifts the instantaneous phase of the modulated wave between predetermined discrete values is called *phase-shift keying.* One predetermined phase of the signal may be guard and another may be trip; or a combination of keying between two or more phases can be guard and another combination trip. The bandwidth of the channel is dependent on the channel time required and the keying rate (frequency of keying between phases).

3.2.6 Advanced modulation techniques

The advancement in audio data communications techniques has resulted a wide range of new modulation techniques. The modulation includes phase and amplitude variations to produce a constellation of points that are interpreted as data by the receiver. These techniques are based on sending a serial digital data stream over an audio link. Data rates vary from 2400–56 000 bits/s. The teleprotection equipment uses this data stream to send coded messages with the required trip information. The teleprotection equipment adds security to this stream by using some form of error detection. These modulation techniques provide the ability to get a reasonable amount of data over a relatively good channel. They typically require a higher SNR than any of the other techniques. A simple relationship exists that as data rate increases, a higher quality channel is required. Typically, security is not much of a concern with these types of systems since the data is encoded. Dependability at higher data rates can be a major challenge as fault induced noise can easily impair the channel.

3.3 Power supplies

3.3.1 General

Power supply requirements are covered by the IEEE environmental standards IEEE Std C37.90-1989,[3] IEEE Std C37.90.1-2002, and IEEE Std C37.90.2-1995. High-power supply efficiency minimizes station battery loading and heating of the surrounding environment. At least one alarm output contact to signal out-of-tolerance voltage should be provided and monitored. Other power supply problems may activate the voltage alarm output or separate alarm outputs. Alarm contacts that are Form C may simplify connecting alarms to SCADA and other devices, but common practice is to monitor a normally closed contact of an alarm relay that is energized for normal conditions and de-energized for alarm conditions.

3.3.2 Alternating current source

Alternating current as a source of power is suitable only when supplied from an uninterruptible power source (UPS).

3.3.3 Telephone company power requirements

Particular attention should be given to the power requirements for any on-site active network channel terminating equipment owned by the telephone company. If this equipment is essential to the proper operation of relay schemes, the same considerations listed in this subclause must apply.

3.4 Equipment protection from surge phenomena

The manufacturer of the terminal equipment normally includes all necessary components for suppression of surges in the power supply and output circuits. Such components are provided to reduce the effect of surges in the signal channels and include those necessary to prevent damage to components. Suitable surge

[3]Information on references can be found in Clause 2.

 Copyright © 2004 IEEE. All rights reserved.

Copyright The Institute of Electrical and Electronics Engineers, Inc.
Provided by IHS under license with IEEE
No reproduction or networking permitted without license from IHS Not for Resale

reducing components should be applied to the communications channel and to the power supply connections. Such surge isolation and protective equipment should be coordinated with that of the communications facilities and tested in accordance with SWC tests, IEEE Std C37.90.1-2002.

3.4.1 Noise suppression circuits or devices

3.4.1.1 General

Most commercial equipment contains circuits to sort the incoming signals and yield the desired output. These circuits provide a measure of protection against false operation from spurious frequencies or noise.

3.4.1.2 Circuit arrangement

In frequency shift keyed systems, the tripping circuits are usually arranged to operate upon loss of guard tone and reception of a trip tone. The condition of loss of guard tone output may result from or be coincident with the presence of noise. If a trip frequency or trip frequencies appear under these conditions, an undesired trip may occur. Protection against this is difficult.

3.4.1.3 Noise presence

The presence of noise offers a degree of information that can be used to block the receiver if desired.

A filter can be used to detect broadband noise that, through suitable amplification, can be used to prevent receiver operation. The noise filter should have a sufficiently wide pass band (wider than the receiver filter) so that the response time of this circuit is rapid enough to block the receiver output circuits before an impulse can travel through the tone receiver. The frequency of the noise filter will fit into the spectrum of the system at a point not utilized for information transfer. If the noise to be protected against is not broadband or the frequency spectrum for a noise filter is not available, some means shall be found to operate successfully with the information available through the receive filter. This may be accomplished through the use of a discriminator or logic.

3.4.1.4 SNR comparison circuits

SNR comparison circuits have performed with a satisfactory history of security. It is necessary that a true comparison be made between noise and signal and that trip blocking be performed rapidly. A second area of importance is the time delay in restoration of tripping to permit all residual noise components to clear the equipment.

3.4.1.5 Loss-of-tone monitoring

A loss-of-tone squelch feature improves the security of the tone receiver in the presence of noise. This feature is provided to prevent false operation of the receiver output relays whenever low-level noise is received in the absence of tone.

3.5 Tone level meter

Tone level meters may be used to provide a visual indication of the relative operating condition of tone receivers and channel attenuation.

3.6 Frequency translation protection

Tripping can be blocked during a frequency translation caused by multiplex or carrier equipment switching with the use of a pilot tone in conjunction with a *notched* noise squelch band-pass filter. The pilot tone is

Copyright © 2004 IEEE. All rights reserved.

Copyright The Institute of Electrical and Electronics Engineers, Inc.
Provided by IHS under license with IEEE
No reproduction or networking permitted without license from IHS Not for Resale

selected to fall within the *notch* or rejection band of the noise squelch receiver. Should the voice-grade audio channel translate the relaying frequencies, it will also translate the pilot tone out of the rejection band to allow the pilot tone to activate the noise squelch receiver. By using two frequency shift tones, one can be made to shift up for trip and the other, down to trip. This will permit in-band noise monitoring, and with proper logic, protects against the effects of frequency translation.

4. Voice grade channels

4.1 Introduction

Voice grade channels as referred to in this guide are dedicated communication paths that interconnect two or more locations for the purpose of transmitting electrical signals from one location to another. These channels, which have usable bandwidths of approximately 300–3000 Hz, are transported over a variety of media including paired wire, multipaired cable, coaxial cable, microwave radio, and optical fibers. These signals may be transmitted from one location to another entirely as voice frequency signals or be converted to allow transmission on analog or digital carrier systems. Combinations of various transmission media and transmission systems are frequently employed by telecommunications providers so that demand for telecommunication services is met in the most cost-effective manner.

The reliability of voice grade channels during power system faults is classified according to service performance objectives (SPO). These objectives, with respect to the effects of power system faults, fall into the following three classifications:

1) Class A—Noninterruptible service performance (must function before, during, and after the power fault condition)
2) Class B—Self-restoring interruptible service performance (must function before and after the power fault condition)
3) Class C—Interruptible service performance (can tolerate a station visit to restore service)

IEEE Std 487-2000 presents a more detailed discussion of this topic.

Channel characteristics described in this subclause are for two types of voice grade channels:

a) Typical available voice grade channels, either nonconditioned or conditioned, which can be used for a variety of utility applications, including protective relaying.
b) A voice grade channel specifically designed for protective relaying applications may be available. This channel designation provides increased reliability for protective relaying schemes through improved signal-to-noise performance in that portion of the telecommunications circuit between the power station and the telecommunications service provider’s central office.

4.2 Need for joint discussions

When the use of voice grade channels are contemplated for protective relaying applications, discussions among engineering representatives from the telecommunications service provider and the power utility, and where appropriate, the audio-tone equipment manufacturer or supplier should be held. This will insure that those involved in the project have a clear understanding of the system requirements and have ample opportunity to work out any problems prior to initiation of service. The discussion should include the following items:

a) Audio-tone terminal equipment operation and performance
b) Special high-voltage protection requirements at the power station(s) and any other protection requirements throughout the length of the channel

 Copyright © 2004 IEEE. All rights reserved.

Copyright The Institute of Electrical and Electronics Engineers, Inc.
Provided by IHS under license with IEEE
No reproduction or networking permitted without license from IHS Not for Resale

c) Reliability requirements, including the possibility of dual alternate routed channels
d) Voice-grade channel characteristics
e) Channel testing procedure used by the telecommunications service provider and the power utility
f) Audio-tone equipment and channel compatibility
g) Tariff offerings and requirements
h) Central office termination markings, including joint inspections
i) Power requirements for the telecommunications service provider's network channel terminating equipment
j) Use of sealing current (a circulation of approximately 1 mA of dc current) by the telecommunications service provider to prevent circuit noise caused by small accumulations of oxides at splices and other connection points.

This is not an all-inclusive list but represents items that should be mutually understood to increase the likelihood of successful operation.

4.3 Characteristics of voice grade channels

4.3.1 Voice-band offerings

Table 1[4] gives typical interface requirements and transmission characteristics for two leased voice-band voice grade channels that can be employed for audio-tone protective relaying. These typical specifications are representative of specifications for telecommunication channels that are provided under both interstate and intrastate tariffs in the United States. Since the channel specifications in Table 1 are only representative, it is recommended that actual specifications be obtained from the local telephone company serving a particular area or jurisdiction.

It is anticipated that the requirements for most audio-tone protective relaying systems will be met by one of the channels described in Table 1. If there are unusual transmission requirements, or if special engineering considerations are involved, those should be fully discussed with the telephone company so that they can be provided on a custom engineering basis.

4.3.2 Interface requirements

Requirements at the customer-telephone company interface are established for the electrical protection of the telephone network, for the proper functioning of the protective relaying channel and the terminal equipment, and for purposes of standardization in private line channel design.

[4]Notes in text, tables, and figures are given for information only and do not contain requirements needed to implement the guide.

Copyright © 2004 IEEE. All rights reserved.

Copyright The Institute of Electrical and Electronics Engineers, Inc.
Provided by IHS under license with IEEE
No reproduction or networking permitted without license from IHS Not for Resale

Table 1—Typical interface requirements and transmission characteristics for leased voice-band voice grade channels used for audio-tone protective relaying

	Parameter	Basic channel	Special audio-tone protective relay channel
Requirements at customer-telephone company interface			
(1)	Maximum transmitted-signal power	0 dBm	+16 dBm (See Note 1) 0dBm
(2)	Impedance of terminal equipment	600 Ω ±10% resistive, balanced	600 Ω ±10% resistive, balanced
(3)	Received signal power of 1004 Hz test tone (at installation)	–16 dBm ±1 dB	–16 dBm ±1 dB
Transmission characteristics			
(1)	Attenuation distortion-variation with reference to 1004 Hz	500–2500 Hz, –2 to +8 dB 300–3000 Hz, –3 to +12 dB (See Note 3)	500–2800 Hz, –1 to +3 dB 300–3000 Hz, –2 to +6 dB
(2)	1004 Hz loss at installation	16 dBm ±1 dB	16 dBm ±1 dB
(3)	1004 Hz short-term loss variation	< ±3 dB	< ±3 dB
(4)	1004 Hz long-term loss variation	< ±4 dB	< ±4 dB
(5)	Envelope delay distortion	< 1750 ms, 800–2600 Hz (See Note 3)	< 2000 ms, 800–2600 Hz
(6)	C-notched noise-SNR with 1004 Hz test tone	24 dB minimum	24 dB minimum
(7)	C-message noise	(See Note 2)	(See Note 2)
(8)	Impulse noise-threshold with respect to received 1004 Hz test tone –6 dB –2 dB +2 dB	Maximum count above threshold allowed in 15 min 15 9 5	Maximum count above threshold allowed in 15 min 15 9 5
(9)	Local channel resistance unbalance	Not specified	Maximum 1% unbalance
(10)	Special channel design	None	Gain and loss devices placed to maximize SNR during fault conditions; receiving amplifiers not used at power station; enhanced trip signal power levels permitted.

NOTES to Table 1

1—The +16 dBm is classified as a *short-term enhanced signal.*

--`,,,,,,,-`-`,,`,,`,`,,`---
Copyright © 2004 IEEE. All rights reserved.

Copyright The Institute of Electrical and Electronics Engineers, Inc.
Provided by IHS under license with IEEE
No reproduction or networking permitted without license from IHS
Not for Resale

2—C-message noise:

Circuit length (miles)	Noise at receiver (dBrnC)
0–50	28
51–100	31
101–400	34
401–1000	38

3—C-conditionings may be applied to the basic channel in Table 1 to improve the attenuation distortion and envelope delay distortion characteristics. Several conditionings are defined as follows:

	C_1 Conditioning		C_2 Conditioning		C_4 Conditioning	
Attenuation distortion variation with reference to 1004 Hz	**Frequency range (Hz)**	**Variation (dB)**	**Frequency range (Hz)**	**Variation (dB)**	**Frequency range (Hz)**	**Variation (dB)**
	300–2700	–2 to +6	300–3000	–2 to +6	300–3200	–2 to +6
	1000–2400	–1 to +3	500–2800	–1 to +3	500–3000	–2 to +3
	300–3000	–3 to +12				
Envelope delay distortion	**Frequency range (Hz)**	**Distortion (μs)**	**Frequency range (Hz)**	**Distortion (μs)**	**Frequency range (Hz)**	**Distortion (μs)**
	1000–2400	<1000	1000–2600	< 500	1000–2600	< 300
	800–2600	<1750	600–2600	< 1500	800–2800	< 500
			500–2800	<3000	600–3000	<1500
					500-3000	< 3000

4.3.2.1 Transmitted signal power

For the leased voice-band telephone channels listed in Table 1, the maximum allowable composite transmitted signal power at the customer-telephone company interface, averaged over any 3 s interval, is 0 dBm (0 dB referred to 1 mW). The *special audio-tone protective relay channel*, described in the Bell System Technical Reference PUB 41011 [B2][5] and shown in Table 1, permits a short-term enhanced trip signal up to +16 dBm at the transmitting interface. This is so that the transmitted trip signal might override the fault coincident noise often introduced onto telephone facilities at times of power system faults. The duration of the enhanced trip signal is typically 50–100 ms, depending upon the terminal equipment design. If an enhanced trip is used, the steady-state transmitted power must be less than 0 dBm by the amount necessary to permit the 3 s intervals, including the enhanced trip signal and the 3 s before and afterwards, to meet the 3 average power limitation. For example, if an enhanced signal of +16 dBm is sent for a duration of 50 ms, the maximum permissible steady-state power before and after the enhanced signal would be –4.7 dBm. This is determined as follows:

a) 0 dBm for 3 s is equal to 3 mWs

b) +16 dBm for 50 ms is equal to 40 mW × 0.05 s or 2 mWs

c) 3 mWs total for any 3 s interval minus 2 mWs of enhanced trip signal is equal to 1 mWs available for the remaining time of 2.95 s

d) (1 mWs) / (2.95 s) = 0.34 mW or –4.7 dBm

[5]The numbers in brackets correspond to those of the bibliography in Annex A.

Copyright © 2004 IEEE. All rights reserved.

Copyright The Institute of Electrical and Electronics Engineers, Inc.
Provided by IHS under license with IEEE
No reproduction or networking permitted without license from IHS Not for Resale

When more than one protective relaying tone transmitter is connected to the same voice grade channel, the power limitations apply to the total signal at the customer-telephone company interface.

However, it is in the best interest of the protection to stay well under the +12 dBm clipping point to assure that the signal is detectable to the receiver. Due to the metallic imbalance, there may be the addition of 60 Hz based noise during faults that will increase the composite level on the circuit beyond what is being transmitted. The audio-tone equipment on the market can do a good job ignoring the noise at fairly high SNRs; however, the actual audio-tone signal must be intact.

4.3.2.2 Terminal impedance and balance

For the channels listed in Table 1, the nominal impedance of the protective relaying terminal equipment should be 600 Ω, resistive ±10% and balanced to ground over the 300–3000 Hz band. The impedance of telephone company test equipment used for installation and maintenance tests is ordinarily 600 Ω, resistive. Therefore, for channels whose transmission characteristics were adjusted using 600 Ω, test equipment should also employ protective relaying terminal equipment that has the same impedance to ensure that channel transmission performance is as specified.

Some of the older equipment used tuned filter coupling to match the transmitter to the phone circuit. When multiple tones are used, these filters are paralleled. While the impedance of the filter is 600 Ω at its tuned frequency, it is much higher out-of-band. Because of this, the equipment does not provide the required 600 ohm resistive load over the entire band of 300–3000 Hz, and it is very difficult to obtain a C2-conditioned circuit. The newer equipment designs using op-amp coupling resolved this problem.

While circuits from telephone companies are nominally designed to be 600 Ω, they seldom are. Many of the equipment instruction manuals direct the user to adjust the transmitter for 0 dBm into the phone circuit. If the circuit is, say 300 Ω, the real power will be greater than 1 mW. It will not be 0 dBm, but will be 0 dBsr (referenced to scale reading rather than a 600 Ω load). This causes alignment difficulties between the telephone company and the utility, since commercial telephone test equipment uses 0 dBm not 0 dBsr as a reference. The correct method for transmitter adjustment is to adjust the transmitter to 0 dBm into a 600 Ω "dummy" load. Then connect it to the phone circuit.

4.3.2.3 Received signal power

For the channels in Table 1, the 1004 Hz channel loss at the time of installation is 16 dB ±1 dB. This assumes a 1004 Hz test signal transmitted at 0 dBm from the transmit interface. Therefore, the received signal power at the receive interface is nominally –16 dBm at 1004 Hz. Circuits providing 8 dB attenuation are also available.

4.3.3 Voice grade channel and terminal equipment protection

4.3.3.1 General

Special high-voltage protection on the serving voice grade facilities is a fundamental consideration for audio-tone protective relaying channels and systems. In the presence of a hostile electrical environment, special protection is essential, not only to protect personnel and to safeguard voice grade facilities and terminal equipment against damage, but also to prevent foreign voltages and currents from affecting the dependability and security of the relaying system. IEEE Std 487-2000 provides guidance for the protection of wire-line communications facilities serving electric power stations.

Foreign potentials and currents can adversely affect voice grade channels through inductive and capacitive coupling or as a result of ground potential rise (GPR). The major sources of extraneous potentials and currents that should be considered when designing special protection for protective relaying channels and systems are lightning, switching transients, and power system faults that produce GPR at power stations and

 Copyright © 2004 IEEE. All rights reserved.

Copyright The Institute of Electrical and Electronics Engineers, Inc.
Provided by IHS under license with IEEE
No reproduction or networking permitted without license from IHS Not for Resale

longitudinal induction in the serving voice grade facilities. IEEE Std 367-1996 provides data on the determination of foreign potentials.

4.3.3.2 Protection devices

The reliability of the protective relaying channel is dependent in part on the special protection devices employed on the serving voice grade facilities. If necessary protection devices are omitted, or if the devices used are inappropriate for the electrical environment, then interruptions of telecommunications signal transmission or damage to voice grade facilities or terminal equipment may result. Reliability is determined largely by the proper selection and application of protective devices in a coordinated system of special protection (see 4.3.4). Special protection devices commonly used are briefly described in this subclause. More complete descriptions and recommendations on the engineering and design of special protection systems are contained in IEEE Std 487-2000.

4.3.3.3 Isolating transformer

An isolating transformer is a two-winding transformer that is inserted in the voice grade line between the external voice grade cable and the wiring within the power station as shown in Figure 1. It is provided with high-voltage insulation between the windings and between the windings and ground so the entire GPR and induced voltage on the pair appears harmlessly across the transformer dielectric barrier. The winding(s) of an isolating transformer may be center-tapped to serve as a combined isolating and drainage transformer; see 4.3.3.5, which describes drainage reactors. However, when used in this manner, the winding so used must have suitable drainage current handling capabilities.

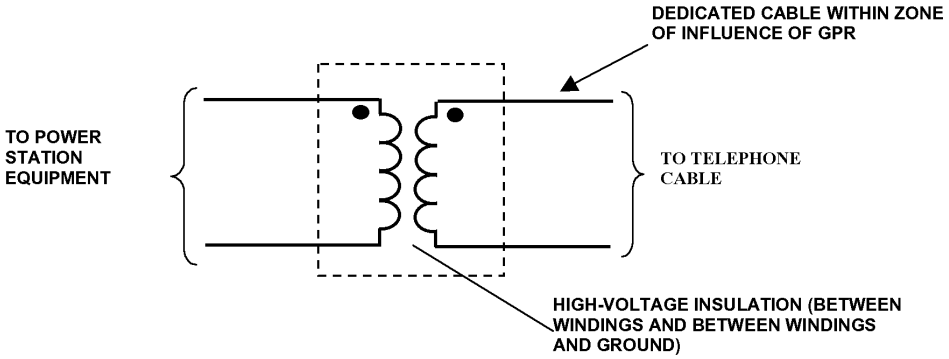

Figure 1—Isolating transformer

4.3.3.4 Neutralizing transformer

A neutralizing transformer has a primary winding, or exciting winding, plus one or more pairs of secondary windings that are inserted longitudinally in the voice grade channel(s) as shown in Figure 2. The primary winding is connected between the power station ground and low impedance remote ground. The GPR is impressed across the primary winding, and by transformer action, a nearly equal voltage is induced into the secondary windings. By virtue of the transformer connection, this voltage opposes (neutralizes) the GPR and induced voltages to prevent unsafe and damaging voltages from appearing on the channel wire pair(s).

Copyright © 2004 IEEE. All rights reserved.

Copyright The Institute of Electrical and Electronics Engineers, Inc.
Provided by IHS under license with IEEE
No reproduction or networking permitted without license from IHS Not for Resale

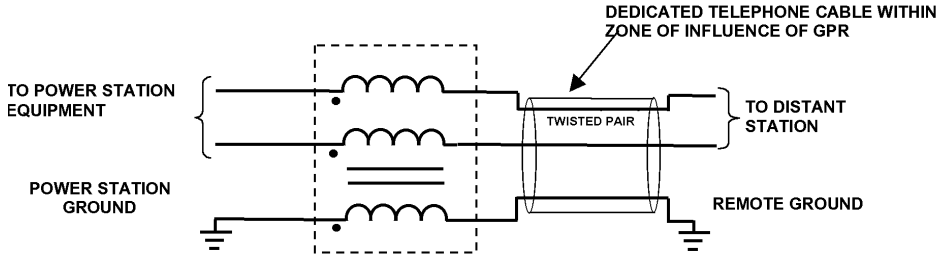

Figure 2—Neutralizing transformer

4.3.3.5 Drainage reactor or mutual drainage reactor

A drainage reactor is a center-tapped or two-winding coil connected across the voice grade pairs as shown in Figure 3. It presents a high shunt impedance to differential (metallic) signals while providing a low impedance path for draining longitudinal currents to ground. It may be connected to ground as in part a) of Figure 3, through a single protector to ground as in part b) of Figure 3, or through two protectors as shown in parts c) and d) of Figure 3, depending on which arrangement is required to control the flow of any dc sealing current that may be present. The arrangement shown in part c) of Figure 3 is used when carrier frequency signals are present, to minimize the attenuation resulting from the stray capacitance to ground in the drainage reactor. Since any protector produces noise when it operates, direct drainage, when it can be used, is the quietest configuration. In the circuits shown, a drainage reactor couples nearly equal levels of noise from an operating protector(s) to both tip and ring conductors of the voice grade pair, thereby greatly reducing the differential circuit noise resulting from the protector operation. When used with two protectors, the drainage reactor helps to force nearly simultaneous firing of the two protectors. IEEE Std 487-2000 presents a more detailed discussion on this topic.

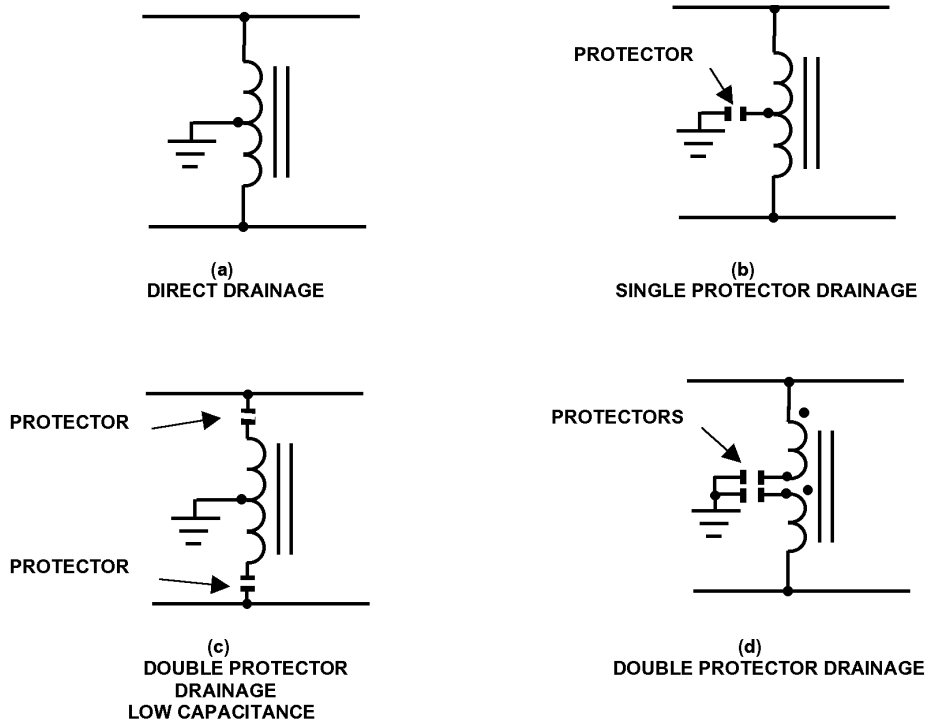

Figure 3—Drainage reactors

Copyright © 2004 IEEE. All rights reserved.

Copyright The Institute of Electrical and Electronics Engineers, Inc.
Provided by IHS under license with IEEE
No reproduction or networking permitted without license from IHS
Not for Resale

4.3.3.6 Protectors

Carbon block and gas tube protectors are spark gap devices that fire (arc across the gap) when the voltage on the conductor to which they are connected exceeds a design voltage. When used with drainage reactors noted in 4.3.3.5, metallic noise into the circuit from the arc discharge is minimized.

4.3.3.7 Dedicated cable

A section of voice grade cable extending from the power station to a point near the edge of the GPR zone of influence and carrying only circuits for the power station is referred to as a *dedicated cable*. The dedicated cable may need special dielectric strength requirements. IEEE Std 487-2000 describes such a cable.

4.3.3.8 Optical couplers

An arrangement of high dielectric optical couplers may be used to replace an isolating transformer or a neutralizing transformer. When optical couplers are used, battery supplies or non-interruptible power supplies are required on both sides of the high-voltage isolation point.

4.3.4 Coordinated protection

A fundamental concept of special protection is that of a *coordinated* system of protection. A coordinated system of protection is one in which special protection measures are applied to less important, interruptible voice grade services as well as to critically important, non-interruptible services (for example, audio-tone protective relaying), which are provided in the same cable. This is to ensure that circuit failure or operation of non-coordinated protection on a less critical pair will not cause excessive pair-to-pair stress, which might result in failure or interruption of a critical, non-interruptible service. The protection devices used on the various services should, therefore, be coordinated with each other with respect to the electrical environment and the SPO of the telecommunication services on which they are employed. The object of the coordination is to minimize the likelihood of cable failure, protector operation, failure of special protection devices, failure of terminal equipment, or other similar occurrences, which could create hazards to personnel and plant and result in interruptions or outages of critical and non-critical services alike.

4.3.5 Transmission characteristics

4.3.5.1 Attenuation distortion

Attenuation distortion is the difference in the attenuation of a channel at any two frequencies. It is specified by placing a limit on the maximum loss at any frequency in a specified band of frequencies with respect to the loss at a 1004 Hz reference frequency.

For the basic channel listed in Table 1, in the overall frequency band between 300 and 3000 Hz, the loss may vary from –3 to +12 dB with respect to the loss at the reference frequency (– means less loss, + means more loss). In the 500–2500 Hz portion of the overall band, less variation is permitted, and the loss may vary only from –2 to +8 dB with respect to the loss at 1004 Hz.

For the special audio-tone protective relaying channel listed in Table 1, the attenuation distortion is significantly less (the frequency response is much flatter) than for the basic channel. For the overall frequency band between 300 and 3000 Hz, the loss may vary from –2 to +6 dB compared with the loss at 1004 Hz. For that portion of the band between 500 and 2800 Hz, the loss may vary only from –1 to +3 dB compared with the loss at 1004 Hz. In this channel, the significance of improved attenuation distortion is that, for protective relaying systems employing multiple voice frequency tones at different frequencies, the tones will be received with much less variation in their signal amplitudes than with the basic channel.

Copyright © 2004 IEEE. All rights reserved.

Copyright The Institute of Electrical and Electronics Engineers, Inc.
Provided by IHS under license with IEEE
No reproduction or networking permitted without license from IHS Not for Resale

4.3.5.2 Channel loss and variations

For the channels listed in Table 1, the standard 1004 Hz loss at channel installation is 16 dB ±1 dB. However, variations after installation can be expected. Short-term loss variations may be caused by dynamic regulation of carrier system amplifiers, switching to standby facilities, and some maintenance activities. *Short-term* is meant to be a few seconds or less. The limit on short-term variations is ±3 dB.

Long-term variations are primarily caused by temperature changes affecting local plant, component aging, amplifier drift, and other phenomena. *Long-term* is meant to be periods of days, weeks, or even longer. Long-term variations are corrected during periodic routine measurements. They should not exceed ±4 dB with respect to the nominal 16 dB channel loss.

4.3.5.3 Channel delay characteristics

The subject of voice grade-channel time delay should be thoroughly discussed on a system basis by all concerned parties. Of particular importance to the protective relaying engineer is the contribution of channel time delay to the overall fault clearing time and the resulting effect on power system relaying performance. The application engineer should have an appreciation of this effect and should be aware that there are delay constraints on some types of relaying applications, such as phase comparison.

It is important that any limit established for channel delay not be overly restrictive. The reason for this is that unless special voice grade facilities are constructed for minimum achievable delay, the channel delay will be dependent upon the type and length of available voice grade facilities and upon the type of carrier terminal equipment being used by the telephone company. In most instances, the delay of existing facilities and terminal equipment will be perfectly satisfactory for protective relaying applications. For example, if a preliminary delay limit has been given as 8 ms, and the shortest available voice grade channel has a total delay of 10 ms, it would appear that the limit is exceeded by 25%. However, the additional 2 ms may be acceptable when one considers the overall fault clearing time, which also includes the fault sensing relay, audio-tone terminal equipment, and circuit breaker operating times.

The total time delay of the voice grade channel consists of the propagation delay of the line facilities over which the channel is provided, plus the delay introduced by any carrier terminal equipment. These delay times can generally be obtained from a telephone company transmission engineer. The end-to-end voice grade facilities used for the transmission of audio tones will ordinarily consist of both local and interoffice facilities. Local facilities, known as loops, are the portion of the total facility that exists between the power station and the serving telephone central office. Local facilities typically consist of metallic cable pairs over which the audio tones are transmitted.

In some instances, pair gain systems such as digital loop carrier systems may be part of the local facility. Interoffice facilities, which provide the transmission path between serving telephone central offices, may occasionally consist of cable pairs (voice frequency trunks) over which the audio tones are transmitted, but will typically consist of analog or digital carrier systems operating on a variety of transmission media such as nonloaded cable pairs, coaxial cables, optical fibers, and microwave radio.

Some typical line facility propagation delays are as follows:

a) Approximately 1 ms per 12 miles of H88 loaded cable pairs commonly used in local facilities to serve user locations

b) Approximately 1 ms per 100 miles of repeated analog carrier line operating on nonloaded cable pairs

c) Approximately 1 ms per 150 miles of repeated analog carrier line operating on coaxial cable.

d) Approximately 1 ms per 125 miles of repeated digital carrier line operating on nonloaded cable pairs

e) Approximately 1 ms per 120 miles of optical fiber systems

 Copyright © 2004 IEEE. All rights reserved.

Copyright The Institute of Electrical and Electronics Engineers, Inc.
Provided by IHS under license with IEEE
No reproduction or networking permitted without license from IHS Not for Resale

f) Approximately 1 ms per 180 miles of microwave radio carrier links

The delay introduced by the carrier terminal equipment is primarily due to the delay associated with the channelizing filters and equalizers. This delay is typically in the range of 0.3–1.3 ms per carrier terminal pair (modulation and demodulation). In determining the delay of a terminal to a frequency shift keying signal such as used in protective relaying, the *absolute envelope delay* of the terminal at the trip frequency is the quantity of greatest importance. The absolute envelope delay of the terminal is the incremental phase shift between the input and the output of the terminal with respect to the frequency of a single sinusoidal amplitude modulated signal. It is often used in the specification of voice grade equipment and is relatively easy to measure.

The variation of envelope delay over a specified frequency range is referred to as *envelope delay distortion*. Envelope delay distortion has little effect on the single frequency tone signals of a *frequency shift, ON-OFF*, or *phase-shift keying* audio-tone system, but may be very important in the performance of a *coded pulse signaling* system because envelope delay distortion contributes to pulse distortion and interference between successive pulses of a pulse code data signal. Typical values of envelope delay distortion for two types of leased voice grade channels are shown in Table 1.

From the brief discussion given here, two generalized guidelines can be derived that will be useful for understanding the importance of channel delay and evaluating its effect in protective relaying applications. First, the total delay of the voice grade channel consists of the propagation delay of the line facilities plus the delay of the carrier terminal equipment. In most instances, the total delay of typically available voice grade channels will be completely satisfactory for protective relaying applications. However, in phase comparison systems, delay times are critical (usually only 3–4 ms can be tolerated), and the delay of available voice grade channels may sometimes be excessive for this application. Second, since envelope delay distortion is relatively unimportant for the most common types of audio-tone protective relaying signals (frequency shift, ON-OFF, or phase-shift keying), the envelope delay distortion requirements can be greatly relaxed (for reasons of economy of channel design) for these systems. Table 1 shows such a relaxation for the special audio-tone protective relaying channel. It should be noted, however, that systems using coded pulse signaling and some phase comparison systems will likely have more stringent envelope delay distortion limits that must be included in the voice grade-channel design specifications.

While the users end terminals may be located close together, the telephone company’s architecture (LATA lines) may force the use of multiple carriers, including long distance or toll carriers. Therefore the absolute delay of the communications channel may be longer than expected. In order to assure proper time coordination for *directional comparison relaying* schemes, the relay channel time should be checked.

4.3.5.4 C-message noise

Message circuit noise is normally referred to in units of dB above reference noise (abbreviated dBrn). The level of 1 pW (10 E–12 W) at 1000 Hz is used as the reference power. Noise powers of a magnitude to cause interfering effects will then be expressed as positive values of dBrn.

C-message noise is the voice-grade circuit noise measured using a frequency weighted filter that simulates the interfering effect of the various frequency components of the noise. It is expressed in dB above reference noise with C-message weighting (dBrnC). The C-message weighting filter has zero relative loss at 1000 Hz and gives a reading of 88.5 dBrnC with an input of 0 dBm of flat noise in the bandwidth between 0 and 3000 Hz. Note in Table 1 that C-message noise limits on voice grade channels are a function of channel length, since noise is generally cumulative depending on the number of repeaters and terminals in the circuit.

C-message noise is a measure of the noise output from a channel in the idle condition. It is a valid measure of the noise on channels that do not include compandors or other level sensitive devices.

Copyright © 2004 IEEE. All rights reserved.

Copyright The Institute of Electrical and Electronics Engineers, Inc.
Provided by IHS under license with IEEE
No reproduction or networking permitted without license from IHS Not for Resale

Compandors improve the signal-to-noise performance of voice circuits by compressing the range of speech signal amplitudes at the input of the circuit and expanding it at the output; for example, when low signal level is present, gain is added at the input to the channel and attenuation is added at the output. Thus, channels equipped with compandors will have noise outputs that vary depending on the level of the signal present and will show an artificially low C-message noise when no signal is present. These channels must be measured using C-notched noise. Although compandors are frequently used on voice circuits, they should not be used on audio-tone circuits used for protective relaying because they can change the signal and noise levels.

4.3.5.5 C-notched noise

C-notched noise is a measure of the amount of noise on a channel with a signal of standard level present. The measurement is made by applying a 1004 Hz *holding tone* at the transmitting end of the channel to operate the compandors and other signal dependent devices, removing the tone at the receiving end with a very narrow band elimination filter (notch filter), and measuring the resultant noise through a C-message weighting filter.

4.3.5.6 Impulse noise

Impulse noise is characterized by large peaks or impulses in the total noise waveform. It is measured with an instrument that responds to noise waveform excursions above a selectable power threshold using a counter having a maximum counting rate of seven counts per second. Measurements are made through a C-message filter. A holding tone that is transmitted to activate any compandored facilities in the channel is notched out at the receiver. The impulse noise measurement for the protective relaying channel involves counting the number of noise peaks exceeding a threshold numerically 6 dB below the received test tone power. In addition, counts are made of the number of noise peaks exceeding thresholds that are 2 dB below and 2 dB above the received test tone power. Limits for impulse noise at the receiver are given in Table 1.

4.3.5.7 Noise in digital multiplexer voice channels

The noise characteristics of digital multiplexer voice grade channels may be different from those of analog transmission systems. Receiver noise and alien tone detection circuitry designed for the characteristics of analog channels may not be as effective if a failed digital channel produces noise characteristics different from those which the receiver was designed to detect. If the tone receiver noise detection does not respond properly, false receiver trip outputs may occur during brief or repeated interruptions of the channel. The tone equipment manufacturer should be consulted as to whether the noise suppression circuitry of the receiver is suitable for use on a particular digital multiplexer system.

4.3.5.8 Special local channel design

As shown in Table 1, only the special audio-tone protective relaying channel incorporates special local channel design measures. The objective of these measures is to increase substantially the SNR of both guard-type and trip-type signals in the local channel during power system fault intervals.

One of the unique problems inherent in providing communication service to power stations is the severe noise signals that are frequently introduced into cable facilities during power faults. This noise is often responsible for inhibiting the reception of valid trip signals during the most critical interval. Thus, protective relaying system dependability can be compromised by noise generated during fault intervals.

The improved dependability of this channel comes about from a basic improvement in the SNR of the received trip signal. This improvement is accomplished by the following means:

Selection of cable pairs in the local loop portion of the channel to ensure better than average resistance balance, as discussed in 4.3.5.9. Authorizing the employment of short-term enhanced trip signals while

 Copyright © 2004 IEEE. All rights reserved.

Copyright The Institute of Electrical and Electronics Engineers, Inc.
Provided by IHS under license with IEEE
No reproduction or networking permitted without license from IHS Not for Resale

retaining the normal 3 s average power limitation. Installing any necessary gain or loss devices at locations that ensure a true improvement in the SNR. For example, receiving amplifiers are not provided at power stations since these would amplify locally generated noise as well as the incoming signal, and thus would not contribute to an improvement in the SNR.

While automatic loopback devices (sometimes referred to as *829 class devices*) allow telephone companies to remotely test the circuit all the way to the substation, they should not be used on Class A circuits. They may be used on SCADA or other Class B circuits.

Finally, higher than ordinary signal powers are permitted on the local channel at all times for both the continuous guard signals and the infrequent trip signals. This is accomplished by not installing the usual 8 dB pad (attenuator) on the telephone company side of the transmit interface with the customer, and also by applying higher than ordinary signal power (by 8 dB) to the local channel from the telephone central office on the receive end of the channel.

4.3.5.9 Local channel resistance unbalance

During the power fault condition, longitudinal voltages of large magnitude may be induced in the local channels (the portion of the circuit between the power station and the serving telephone central office). Because the channel is terminated by a well-balanced transformer, the conversion from common (longitudinal) to differential (metallic) mode for 60 Hz voltage depends primarily on the resistance balance of the cable pair serving the power station. For the special audio-tone protective relaying channel only, the resistance unbalance of the local channel cable pairs will be 1% or less.

4.4 Private networks

4.4.1 Microwave

Microwave radio is often used for teleprotection when the installation of optic fiber is difficult (e.g., through difficult terrain).

If teleprotection is carried over these radio links, particular attention should be paid to the security and dependability to be expected; this is because the fading nature of these radio paths makes it very difficult to provide the degree of signal integrity available from fiber optic systems.

The path fading occurs when a wind-free environment allows the air to stratify, causing multiple propagation paths between the microwave antennae; this causes frequency-dependent nulls in the received signal, with the null frequencies rapidly changing with time, corrupting the information being carried.

It is common to improve the up time by switching over to alternate antennae (space-diversity) and/or different frequencies (frequency-diversity); however, signal corruption may occur during the switchover, so it is important that the teleprotection units can provide the required security during these corruptions.

For teleprotection units coding the information in audio tones, immunity to level and frequency hits, with noise bursts, is required.

For teleprotection units coding the information in data packets, immunity to random error bursts (BERs up to 0.5 = garbage) is required.

4.4.2 Multiplexer voice channels

It is becoming common practice to implement digital fiber optic multiplexers in substations to provide voice grade channels for protective relaying. Since many of these multiplexers have originated in the

Copyright © 2004 IEEE. All rights reserved.

--`,,,,,,`-`-`,,`,,`,`,,`---
Copyright The Institute of Electrical and Electronics Engineers, Inc.
Provided by IHS under license with IEEE
No reproduction or networking permitted without license from IHS Not for Resale

telecommunication industry, their audio channel characteristics are quite similar. Locating a fiber optic multiplexer in the substation instead of the central office has many advantages. The lack of a long copper pair entering and exiting the substation can reduce the need for much of the protection circuitry required on leased lines. The co-location of the multiplexer and the relaying device means that the cabling is short and less subject to GPR and other disturbances. Often the group delay, SNR, and other audio performance areas are improved due to the shorter copper pair distances. In addition, the conditioning is often simpler with shorter loops.

The location of the multiplexer in the substation has other advantages as well. The system is more under the control of the power utility. This means the utility has control over when and how the line is tested thereby preventing misoperations caused by testing practices. The ability to control how the equipment is installed and maintained can result in a more reliable system. The use of multiplexers allows the user to implement a system in which the performance objective of operation before, during, and after a fault is achieved with a high level of confidence.

Multiplexer channels can offer technical advantages over leased lines as well. These channels are often designed for relaying applications and are more suited to this use. Outage times on self-healing systems can often be as low as 1 ms for fiber failures. The audio interfaces are also often designed to meet the strenuous requirements of IEEE Std C37.90-1989, IEEE Std C37.90.1-2002, and IEEE Std C37.90.2-1995.

NOTE—The characteristics of failed or failing multiplexer voice grade channels may be different from those of analog transmission systems. Digital multiplexer circuitry designed for voice channels may mimic the presence of valid audio-tone signals for a number of milliseconds after an interruption of the signal path. Audio-tone receiver noise and alien tone detection circuitry designed for the characteristics of analog channels may not be effective under these conditions, possibly leading to false trip outputs. The tone equipment manufacturer should be consulted as to whether the noise suppression circuitry of the receiver is suitable for use on a particular digital multiplexer system.

5. Application principals

5.1 Audio-tone relaying systems

5.1.1 General

Application of audio-tone systems for protective relaying can be divided into two categories:

5.1.1.1 Transformer and remote breaker failure protection or other direct trip applications

These applications are termed *direct transfer tripping*. The audio-tone system functions as the communication link to extend relay tripping circuits to remote circuit breaker locations. These types of direct transfer tripping applications have the greatest difficulty in meeting the relay demands listed in 3.1.3. These systems, with few exceptions, cannot have fault detector supervision of the receivers, and the security against undesired tripping rests solely with the audio-tone equipment.

5.1.1.2 Transmission line protection

Audio-tone systems function as the communication link for pilot relaying schemes employed for transmission line protection. Transfer trip schemes, including direct underreaching, permissive underreaching, and permissive overreaching protection, are used extensively with voice grade channels. Also, audio-tone systems provide channels for various types of phase comparison relaying systems. Directional and phase comparison blocking and unblocking schemes are used primarily with power line carrier, but they are also employed with audio-tone systems over voice grade channels and microwave channels. Tripping with line protective schemes can be made dependent on line relay and fault detector relay operation.

 Copyright © 2004 IEEE. All rights reserved.

Copyright The Institute of Electrical and Electronics Engineers, Inc.
Provided by IHS under license with IEEE
No reproduction or networking permitted without license from IHS Not for Resale

5.1.2 Transformer and circuit breaker failure protection

Transfer tripping schemes using audio-tone systems over voice grade channels have been used extensively for transformer protection where high-voltage breakers have been omitted or for breaker backup protection where system arrangement places a backup breaker(s) at a remote location. The operation of a frequency shift audio-tone system for remote clearing is described in the following paragraph.

During normal conditions, a guard signal(s) or code is transmitted continuously. Receipt of the guard state by the tone receiver produces blocking of the breaker trip circuit. At the same time, the guard state provides continuous monitoring of the tone system. When the protective relays detect abnormal operation, they initiate removal of the guard state(s) and transmission of the trip state(s). The reception of the trip within a specified time of losing guard constitutes a valid trip condition to effect remote clearing.

5.1.3 Transmission line protection

Pilot relaying systems applicable for the protection of power-transmission lines and for which audio-tone channels may be used are briefly described in 5.1.3.1, 5.1.3.2, 5.1.3.3, 5.1.3.4, 5.1.3.5, 5.1.3.6, and 5.1.3.7. The transmission lines may have two or more terminals, each with circuit breakers for disconnecting the line from the rest of the power system. All of the relaying systems described can be used on two-terminal or multiterminal lines. These relaying systems control the automatic operation of the circuit breakers during power system faults.

Where possible, fault detector relays should supervise the receiver relay trip circuits to improve security.

However, their use should not be a substitute for an audio-tone system of highest reliability, since the greatest noise levels are likely to occur at the very instant when the fault detectors have operated, that is, during a power system fault.

5.1.3.1 Direct Underreaching (DUTT)

Fault relays at each terminal of the protected line sense fault current flow into the line. Their zones of operation must overlap but not overreach any remote terminals. The operation of the relays at any terminal initiates both opening of the local breaker and the transmission of a continuous remote tripping signal to effect instantaneous operation of all remote breakers. For example, in Figure 4, for a line fault near A, the fault relays at A open (trip) breaker A directly, and send a transfer trip signal to B. The reception of this trip signal at B trips breaker B.

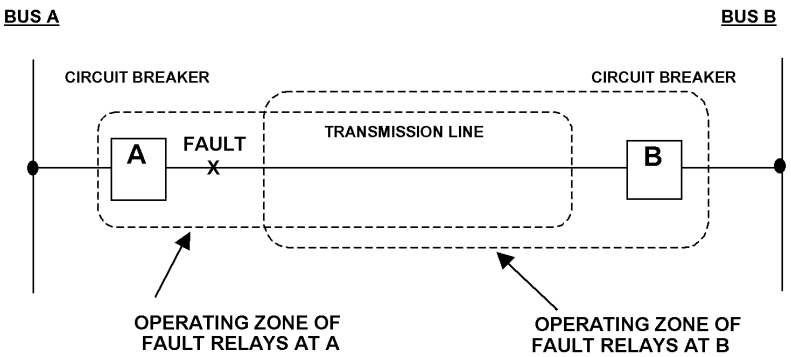

Figure 4—Fault relay operation zones for the underreaching transfer trip

Copyright © 2004 IEEE. All rights reserved.

Copyright The Institute of Electrical and Electronics Engineers, Inc.
Provided by IHS under license with IEEE
No reproduction or networking permitted without license from IHS
Not for Resale

5.1.3.2 Permissive underreaching (PUTT)

The operation and equipment for this system is the same as the direct underreaching system with the addition of overreaching fault detector units at each terminal. They provide added security by supervising the audio-tone tripping of the circuit breaker. In the PUTT scheme, the underreaching elements key the transmitter, and the overreaching elements supervise receiver tripping. As an example, for a fault near A in Figure 5, the fault relays at A trip breaker A directly, and send a transfer trip signal to B. The reception of the trip signal plus the operation of the overreaching fault detector relays at B trip breaker B.

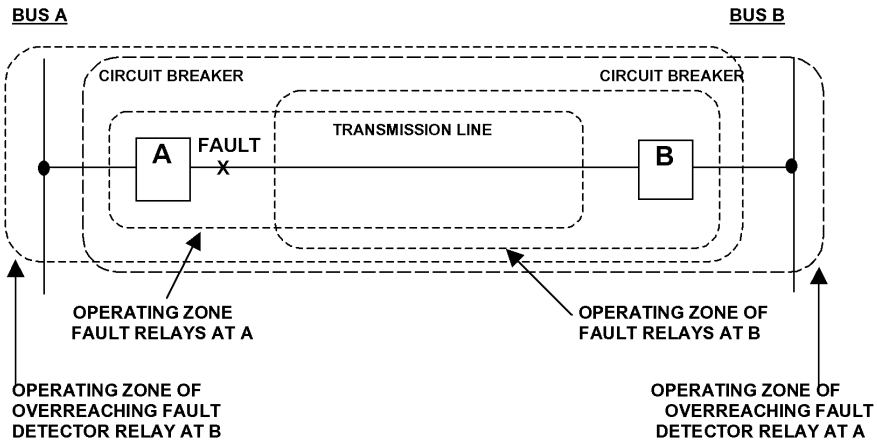

Figure 5—Fault and supervising relay operation zones for the permissive underreaching transfer trip

5.1.3.3 Permissive overreaching (POTT)

Fault relays at each terminal of the protected line sense fault power flow into the line with their zones of operation overreaching all remote terminals. Both the operation of the local fault relays and a transfer trip signal from all of the remote terminals are required to trip any breaker. Thus, in the example of Figure 6 for the line fault near A, fault relays at A operate and transmit a trip signal to B. Similarly, the relays at B operate and transmit a trip signal to A. Breaker A is tripped by the operation of the fault relays at A plus the remote trip signal from B. Likewise, breaker B is tripped by the operation of the fault relay at B plus the remote trip signal from A.

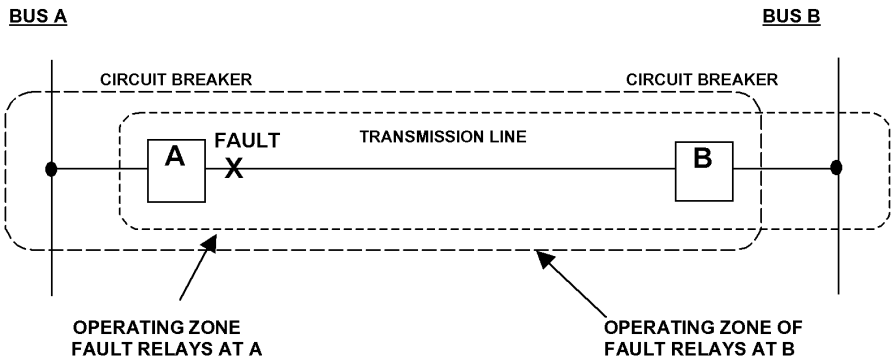

Figure 6—Fault relay operation zones for the overreaching transmission-line pilot relaying system

Copyright © 2004 IEEE. All rights reserved.

Copyright The Institute of Electrical and Electronics Engineers, Inc.
Provided by IHS under license with IEEE
No reproduction or networking permitted without license from IHS
Not for Resale

5.1.3.4 Directional comparison blocking (DCB)

The channel signal in these systems is used to block tripping in contrast to its use to initiate tripping in the previous three systems. Fault relays at each terminal of the protected line section sense fault power flow into the line. Their zones of operation must overreach all remote terminals. Additional fault detecting units are required at each terminal to initiate the channel blocking signal. Their operating zones are looking in the reverse direction and must extend further or be set to be more sensitive than the fault relays at the far terminals. For example, in Figure 7, the blocking zone at B must extend further behind breaker B (to the right) than the operating zone of the fault relays at A. Correspondingly, the blocking zone at A must extend further into the systems (to the left) than the operating zone of the fault relays at B.

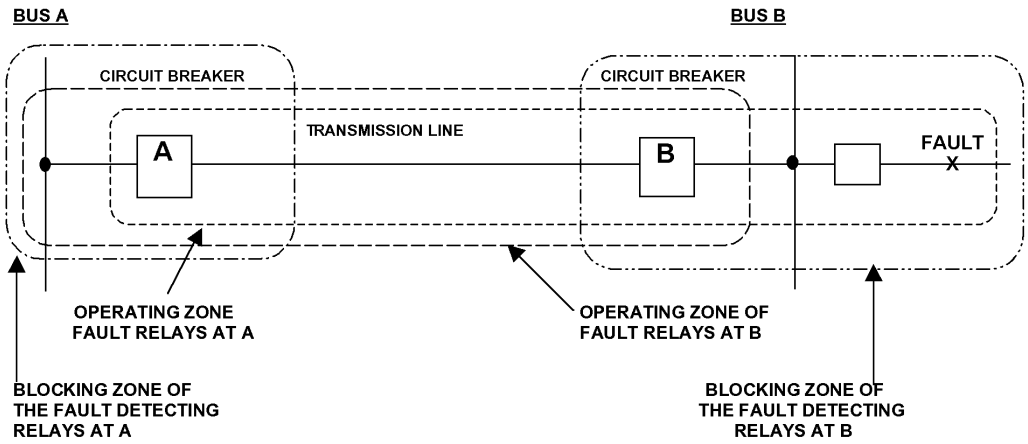

Figure 7—Fault and blocking relay operation zones for the directional comparison—transmission line pilot relaying system

For an internal fault on line AB, no blocking state is transmitted (or if transmitted, it is cut off by the fault relays) from any terminal. In this absence of any channel signal, fault relays at A trip breaker A, and fault relays at B trip breaker B. The tripping may be intentionally delayed to allow for communication delays. This time delay is called *coordination time.* For the external fault to the right of B as shown in Figure 7, the blocking zone relays at B transmit a blocking channel signal to prevent the fault relays at A from tripping breaker A. Breaker B is not tripped because the B protective relays do not see this fault. In the case of two-state channels, many times the tripping state is transmitted during non-fault conditions. Also, a loss-of-channel is defined as a tripping condition.

5.1.3.5 Directional comparison unblocking (DCUB)

DCUB is very similar to POTT with the addition of unblocking logic. With some communications media, when utilizing a POTT scheme, the possibility exists that the signal may be attenuated or lost as a result of a fault. Without the permissive signal, tripping would not be allowed. Unblocking logic can be used to produce a permissive output from the receiver that will last for a short period of time (typically 150–300 ms) if the signal is lost. Tripping will be initiated when the unblocking output is produced if there is a fault and the local permissive trip function is also picked up. If none of the permissive trip functions are picked up, the channel will lock itself out (150–300 ms) after the signal is lost and will stay locked out until the guard signal returns for a preset amount of time.

5.1.3.6 Phase comparison systems

At each end of the protected line, the three line currents are either converted into three proportional signal phase voltages or, through appropriate sequence networks, into a proportional single-phase voltage. The

Copyright © 2004 IEEE. All rights reserved.

Copyright The Institute of Electrical and Electronics Engineers, Inc.
Provided by IHS under license with IEEE
No reproduction or networking permitted without license from IHS
Not for Resale

phase angles of these voltages are compared at the two ends of the line. One signal in the comparison process is local, and the other arrives from the remote location via the audio-tone channel. A squaring amplifier converts the voltages into a two-state pulse train that is used to key the channel to the remote terminal.

With ON-OFF equipment, one of the half cycles of the pulse train keys the transmitter ON and the other half cycle keys it OFF. Because of CT connections, the received carrier half cycles are out-of-phase for external faults so that, alternately, the local and then the remote signal provide essentially a continuous signal to block tripping. On internal faults, the local and remote signals are essentially in phase so that approximately a half cycle of tripping state exists. This is used to permit the protective relays at each terminal to trip their respective breakers. With frequency shift equipment, the current derived voltage controls transmitter shift on alternate half-cycles. For an internal fault, the receiver output coincides with the local voltage to effect tripping. If an ON-OFF tone is used, the relay system will be operated in a blocking mode, and if an FSK tone is used, the system is operated in a transfer trip mode.

In phase comparison systems, voice grade-channel delay times are critical. Any change in channel routing must be carefully coordinated between the power and telephone companies. Arbitrary changes in channel routing could cause false trips or failure to trip during a fault. The preceding sentence is true unless a system to automatically adjust for varying time delays is applied. Auto switching channels require careful consideration of the effect of switching on performance of the relaying scheme.

For phase comparison systems the tone equipment design can be identical for all of the transfer trip type of systems in 5.1.3.1, 5.1.3.2, and 5.1.3.3, where the audio-tone signal is utilized to order or request tripping of the remote breaker. Phase comparison systems may require wider bandwidth and other design changes because of waveform requirements.

5.1.3.7 Current differential systems

Current differential relays determine if a fault is external or internal by comparison of the current phasors in the line ends. The local phasor information is transferred via an voice grade channel to the remote end.

Current differential relaying is based on comparing an operating quantity (OP) with a bias or restraint (RES) quantity. Typically, the operating quantity is the phasor sum of the local and remote currents and the restraining quantity is the sum of the magnitudes of the local and remote currents. A bias factor (with a value less than 1), k, is added to the operating criterion so that $OP - k * RES$ should exceed a set operating threshold.

For external faults, the operating quantity is nearly zero. For an internal fault, the currents at the line ends are essentially in phase, and OP and RES are of equal value. The relay will trip when $OP - k * RES$ exceeds the set threshold.

The modulation technique used may be AM (amplitude modulation), PPM (pulse period modulation), or QAM (quadrature amplitude modulation). Four-wire, 3002, C2 conditioning is generally required. The bandwidth is typically 1000–2500 Hz with a carrier frequency of 1300–1500 Hz. Losses up to 20–30 dB and SNR up to 16–20 dB can typically be accepted.

For current differential systems, voice grade-channel delay times are critical. However, modern relays can automatically measure and compensate for fixed channel delays and variable channel delays resulting from channel routing changes. Asymmetrical channel delays can result in significant operational problems in current differential delays. Auto switching channels require careful consideration of the effect of switching on performance of the relaying scheme.

Because the operation of a current differential system depends on the channel, channel reliability is of utmost importance. The relay system may include unblock logic to allow trip from current elements

 Copyright © 2004 IEEE. All rights reserved.

Copyright The Institute of Electrical and Electronics Engineers, Inc.
Provided by IHS under license with IEEE
No reproduction or networking permitted without license from IHS Not for Resale

following loss-of-channel. It may also have built-in back-up protection, providing other protection during loss-of-channel, but the relay system's overall performance is degraded.

5.2 Mode of operation

5.2.1 General

In the application of audio tones to protective relaying, three basic types of equipment have been used: frequency shift, ON-OFF, and coded pulse signaling.

5.2.2 Frequency shift

The center frequency for frequency shift signaling is the midpoint between the guard and trip frequencies. If more than one frequency shift signal is being used on a single voice grade channel, the spacing of center frequencies varies depending on the equipment bandwidth and filter design. The frequency shift signal is normally operated in the guard mode, which is delta Hz above or below the center frequency. When in the trip mode, the frequency is shifted to the opposite side of the center frequency by an equal amount. With modern, solid-state tone equipment, the speed of the channel is independent of the keying method and of whether the high-shift or low-shift frequency is used for *trip*. Applications involving dual channels (two transmitters and receivers), for added security in a direct transfer trip application, may utilize one channel with a high-shift to trip and the other with a low-shift to trip. This technique is useful in negating the effects of large abnormal frequency shifts associated with major malfunctions of the voice grade channel.

The frequency bandwidth required by a given signaling system is related to the (desired) speed of operation. A greater bandwidth must be designed into the equipment in order to provide faster speed. The bandwidth required by each signal limits the number of signals that can be transmitted over a single-leased voice grade channel.

5.2.3 ON-OFF

The ON-OFF method is utilized for blocking relaying systems and uses an amplitude modulated signal. However, this type of equipment is less frequently applied when using audio tones for relaying.

5.2.4 Coded pulse systems

This is another form of signal employing one of the types of signal transmission in 5.2.2 or 5.2.3. The signal is keyed in a time sequence to form a code. Several systems using this principle have been developed and are in service on operating power systems.

For power system relaying functions, coded pulse systems appear to offer security against false operation due to interference. Tripping is blocked if noise or other interference disturbs the coded pulse pattern.

Coded pulse systems require greater channel bandwidths than the basic frequency shift or ON-OFF systems. For the security and speeds that relaying functions demand, channel bandwidth requirements could exceed that of a voice grade channel. This factor should be considered in view of the frequency range of the voice grade channel and the overall function of the equipment.

5.3 Signal and channel arrangements

5.3.1 General

Reliability can be improved by installing additional voice grade channels and terminal equipment to provide redundant operation. These channels and terminal equipment may be arranged to increase the dependability

Copyright © 2004 IEEE. All rights reserved.

Copyright The Institute of Electrical and Electronics Engineers, Inc.
Provided by IHS under license with IEEE
No reproduction or networking permitted without license from IHS Not for Resale

or the security of the relaying function. Paralleled receiver outputs increase dependability, but lower the security. Conversely, a series receiver output arrangement gives improvement in security at the expense of dependability.

Paralleled receiver outputs may be used to advantage in permissive schemes since the permissive fault detector units tend to compensate for the decrease in security, but they are not recommended for non-permissive schemes. Series connected dual channels provide a significant increase in security for a small decrease in dependability. The decrease in dependability of the series connection can be largely offset by output bypass arrangements on loss-of-channel coupled with the use of separate communications channels. The audio-tone system can be designed for either automatic or manual bypassing. Bypassing the receiver output of the inoperative channel allows the tone system to remain operative even though one of the tone signals is lost. Accidentally bypassing both channels may cause tripping; therefore, an interlock should be provided.

Separation of the communication channels can be accomplished by employing two voice grade channels, preferably with separate routing, or using one voice grade channel in combination with another medium of communication such as microwave, power line carrier, or fiber optics. Voice grade channel and signal arrangements are described in more detail in 5.3.1.1 and 5.3.1.2.

5.3.1.1 Single audio-tone signal (one guard and one trip) over single voice grade channel

This arrangement provides the most economical system. However, it does not allow in-service testing with direct transfer tripping without removal of the desired protection.

The single signal may be adequate when employed with permissive line relaying schemes, but its use in other schemes may allow incorrect operation due to momentary noise bursts and foreign signals.

5.3.1.2 Two audio-tone signals (two guards and two trips) over single voice grade channel

This system can provide additional flexibility of operation and more reliable protection with the receiver outputs connected in series or parallel arrangements to enhance security or dependability, respectively. The tripping circuits can be designed to permit maintenance or testing of each signal in turn without removing the protection. SNRs of the individual tones are degraded in this arrangement because of the required reduction in power of the individual transmitted signals so that the maximum composite transmitted signal power limit is not exceeded.

5.3.1.3 Two audio-tone signals (two guards and two trips) over separate voice grade channels

The receiver output from the second voice grade channel can be arranged to enhance either security or dependability as well as flexibility of application and operation in a system employing two audio tones. In-service testing and maintenance can be extended to include the associated voice grade channel. Also, separate voice grade channels simplify terminations of the voice grade channels with the transmitting and receiving equipment and permit better signal-to-noise performance than in 5.1.3.2 due to the higher tone levels allowed when the two audio-tone signals are on separate voice grade channels. This arrangement protects for both facility and equipment failure.

Where relay protection requires transmission of audio-tone signals in two directions simultaneously (full duplex), a four-wire facility is preferred but not required over a two-wire facility. By using a separate channel in each direction, the full voice band is available for use in both directions simultaneously, simplified channel designs can be used, and SNRs are optimized. Simultaneous two-way transmission over a two-wire facility requires dividing the channel bandwidth into bands used for transmitting in different directions, reduces signal-to-noise performance, and requires more complicated channel design.

--`,,,,,,-`-`,,`,,`,`,,`---
Copyright © 2004 IEEE. All rights reserved.

Copyright The Institute of Electrical and Electronics Engineers, Inc.
Provided by IHS under license with IEEE
No reproduction or networking permitted without license from IHS
Not for Resale

Also in 5.1.3.2 and 5.1.3.2, since both audio-tone channels are located within a common facility, and frequency translations could affect both channels, it is prudent to apply each tone channel with opposite shifts (that is, shift one channel down to trip, and the other, up to trip).

5.3.2 Multistation applications

Normally, the telephone company will be able to custom engineer and provide channels, correctly terminated and balanced, to interface with the specified audio-tone terminals on a multistation circuit. Under such an arrangement, the telephone company is usually responsible for providing and maintaining all facilities, amplifiers, hybrids, pads, filters, bridges, etc., which make up the leased multi-unit channel.

The ultimate objective is a communication system that reliably delivers the desired signals at a reasonable signal power level with a minimum of distortion and delay and with an adequate SNR. It is particularly important with multipoint leased circuits for the user to consult with the telephone company at an early date, especially for phase comparison applications. Since tone equipment applications and voice-grade circuit designs are interdependent, the circuit designs should be fixed with regard to configuration and signal levels before firm bids are requested from the tone equipment manufacturers.

In general, the telephone companies will custom engineer multistation systems, but where such engineering is not available, power utilities may create small multistation arrangements of their own. The following examples assume telephone company-provided facilities between power stations, and power utility-provided communications apparatus at the power stations.

5.3.2.1 Path arrangements

Figure 8 shows three possible circuit configurations for interconnecting three stations. Such would be needed for a three terminal line or for a tapped two-terminal transmission line. In part a) of Figure 8, the interconnection occurs at some point N other than one of the three stations. In part b) of Figure 8, point N vanishes into Station III. part c) of Figure 8, while perhaps requiring additional channel facilities, can simplify the overall problems in some cases.

Any of the circuit legs in Figure 8 may be two-wire or four-wire, depending upon tone transmission requirements and economic factors. Some specific examples will be given in 5.3.2.3.

5.3.2.2 Design requirements

When interconnecting facilities or connecting tone equipment to facilities, the impedances should be matched to minimize losses and prevent reflections. Matching transformers or resistance pads accomplish this; the match the impedances.

Where a received signal must be retransmitted to another circuit leg, as could be true at Station III in part b) of Figure 8, amplification will usually be needed to raise the signal power to about the same level as a locally transmitted tone. On full duplex (simultaneous two-way transmission) two-wire facilities, hybrids or filters are required with the amplifiers to avoid feedback or *singing.* These devices act to segregate the signals going in one direction from those going in the opposite direction.

5.3.2.3 Application examples

Figure 9a is the simplest case, transmitting from Station III to I and II. Transmitter T1 sees half the normal impedance so that a matching transformer MT or resistance pads may be required at Station III. Stations I and II may also need matching, but the application here is no different than for a two-terminal line. Putting the tap at N does not change the picture much, although the pads or matching transformer must be at N instead of at Station III. For this reason, the open delta is preferred over the T-path.

Copyright © 2004 IEEE. All rights reserved.

Copyright The Institute of Electrical and Electronics Engineers, Inc.
Provided by IHS under license with IEEE
No reproduction or networking permitted without license from IHS Not for Resale

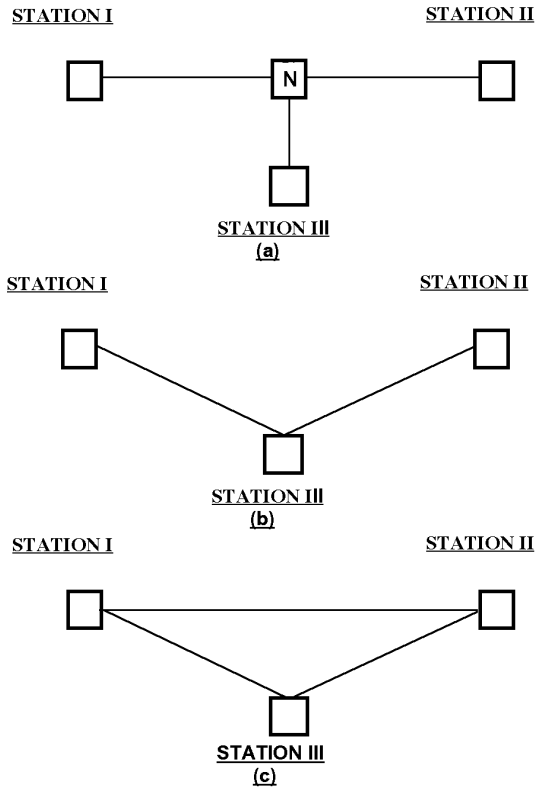

**Figure 8—Possible circuit paths for three terminal protection—
(a) T-path, (b) open-delta path, (c) closed-delta path**

Figure 9b is another open-delta configuration. Here each station transmits to the other two, utilizing two-wire facilities. Frequencies 1 and 2 are amplified at Station III before being retransmitted. Segregating filters prevent amplification of the wrong frequencies to prevent singing. The attenuation of the unwanted signals by the segregating filters must exceed the amount of amplification of the desired signal. Therefore, the lower the level of received signals and hence the greater the required amplification, the greater must be the filter attenuation of the unwanted signals; the more filtering required, the more signal delay.

Hybrids may replace the filters in Figure 9b; however, these are of limited value in a circuit employed for power system protection since a fault on the wire facility may unbalance the hybrid with the likelihood of amplifier singing or ringing.

Two transmitters T3 are used at Station III in Figure 9b to maintain isolation of the *east-west* and *west-east* amplifier paths. These are keyed simultaneously to transmit F3 in both directions.

Figure 9c accomplishes the same functions as in Figure 9b, but by utilizing four-wire facilities the isolation problem is solved without requiring filtering (other than the normal receiver band-pass filters) or hybrids. This arrangement would introduce less delay and would be free from the possibility of singing. The amplifiers should be broad enough so that they introduce negligible delay.

Figure 9d shows another alternative that achieves the ultimate in simplicity. On relatively short hops, this arrangement may be cost competitive with the Figure 9b setup. It is attractive where there are more tone signals to be transmitted than can be handled by the Figure 9b and Figure 9c arrangements. In particular, note that the three paths in Figure 9d are independent, and the frequencies could be duplicated on each path. This is not true in Figure 9b and is only partly the case in Figure 9c, since all three stations are in common on

Copyright © 2004 IEEE. All rights reserved.

Copyright The Institute of Electrical and Electronics Engineers, Inc.
Provided by IHS under license with IEEE
No reproduction or networking permitted without license from IHS
Not for Resale

the east-west and west-east paths. Note also that Figure 9d could readily be less costly than Figure 9c, since the latter has four two-wire paths versus three in Figure 9d. Of course, Figure 9d does not obviate the need for two-way amplifiers at intermediate points for long hops. In contrast, Figure 9c requires only one-way amplifiers. Of the possible circuit paths for three terminal protection, Figure 9b open-delta path and Figure 9c closed-delta path have the advantage of four-wire versus two-wire circuits. However, Figure 9d has only a single set of protective relaying tones in each direction on all of the paths. This provides a 3 dB signal-to-noise advantage over two sets of tones on a path.

Figure 9e shows another alternative offering simplicity for three terminal applications. Full duplex two-wire circuits from each terminal are connected together with impedance matching networks at the telephone company office. Thus, all stations are common to one full duplex two-wire path. Transmitted signals from any one station appear at the other two stations.

Of course, the complexities mount with the number of tones to be carried and with the number of power stations to be interconnected. For multistation applications, careful planning and design is essential to achieve a reliable installation of any of the paths in Figure 9a, Figure 9b, Figure 9c. Figure 9d, and Figure 9e.

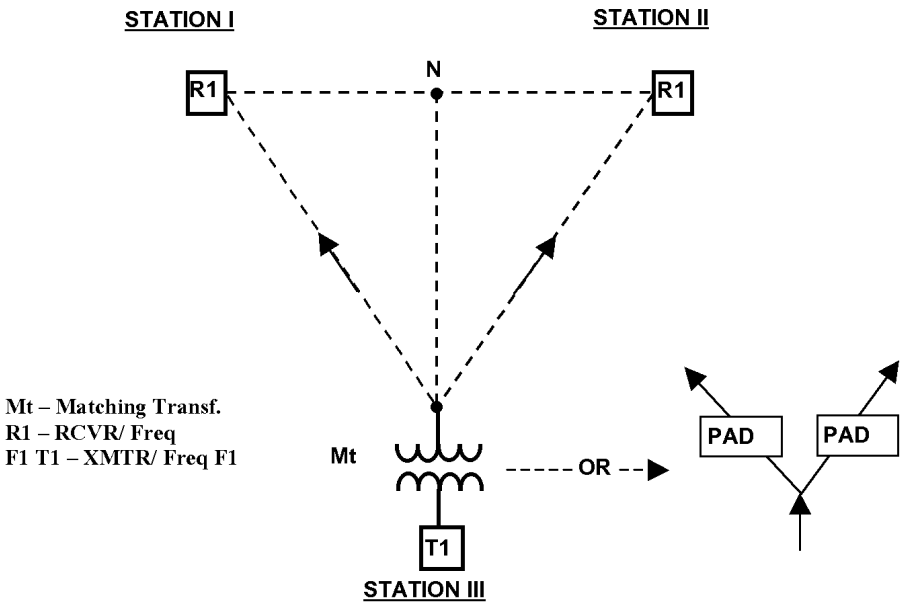

Figure 9a—Multistation application one-way open-delta

Copyright © 2004 IEEE. All rights reserved.

Copyright The Institute of Electrical and Electronics Engineers, Inc.
Provided by IHS under license with IEEE
No reproduction or networking permitted without license from IHS
Not for Resale

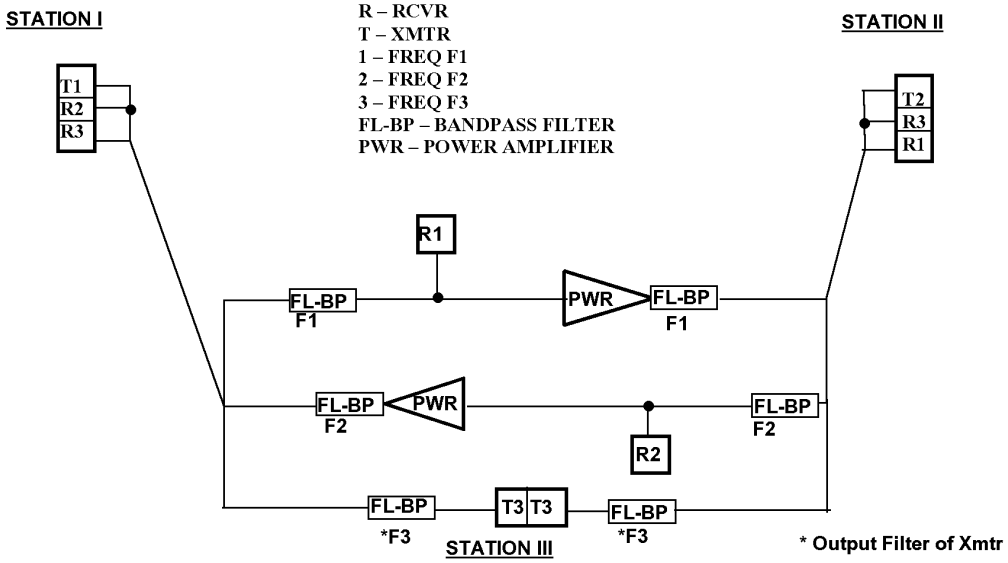

Figure 9b—Two-way two-wire open-delta path

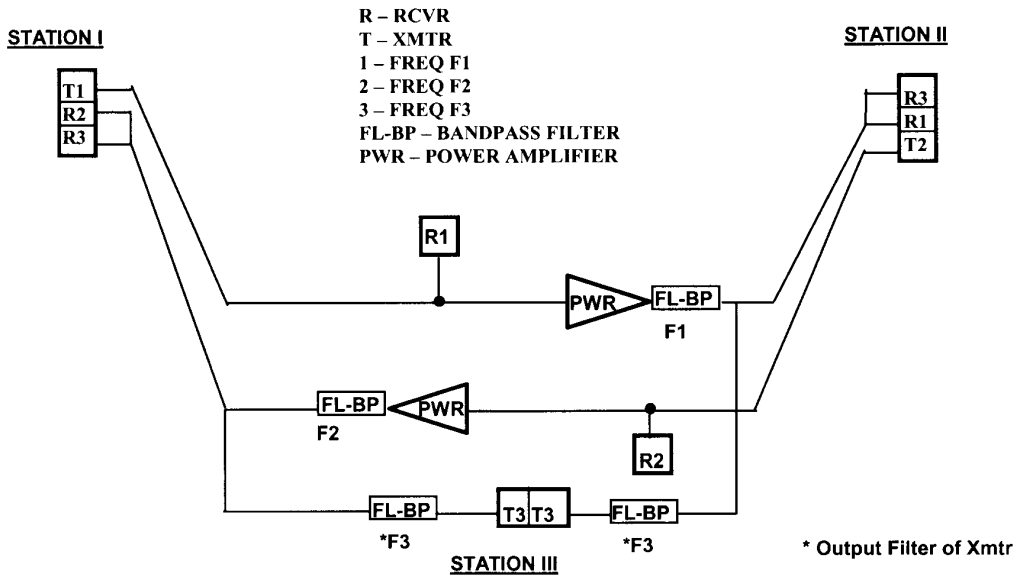

Figure 9c—One-way four-wire open-delta path

Copyright © 2004 IEEE. All rights reserved.

Copyright The Institute of Electrical and Electronics Engineers, Inc.
Provided by IHS under license with IEEE
No reproduction or networking permitted without license from IHS
Not for Resale

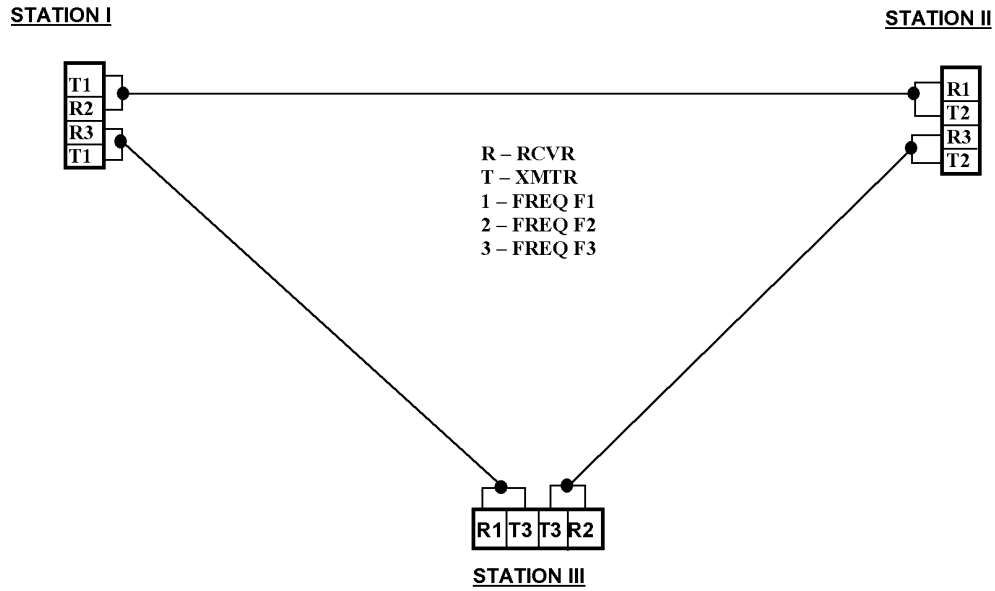

Figure 9d—Two-way four-wire closed-delta path

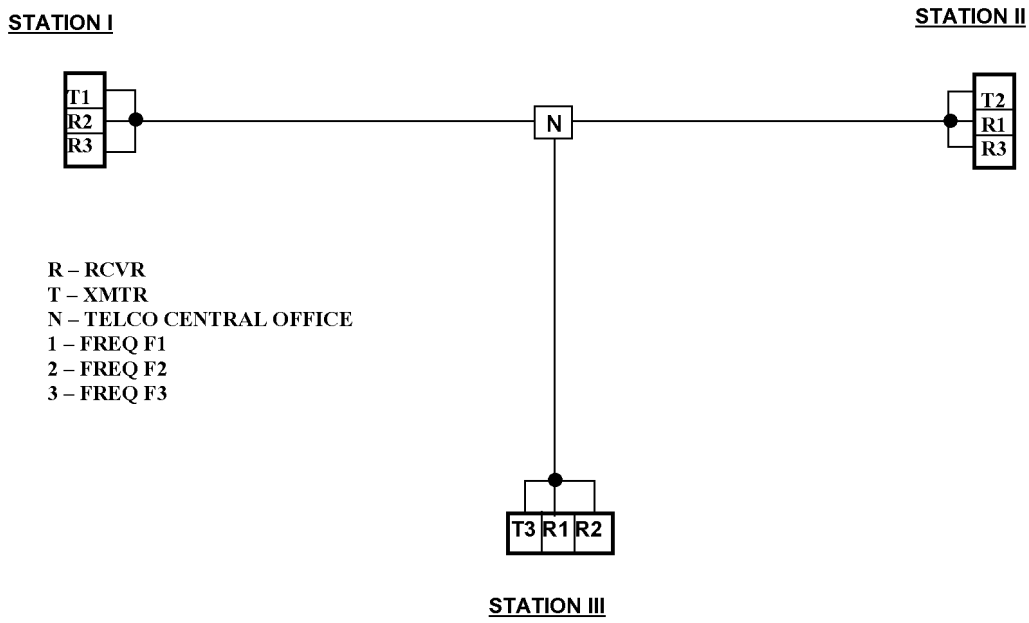

Figure 9e—Two-way two-wire T-path with telephone company central office

5.3.3 Physical separation of voice grade channels for reliability

5.3.3.1 Separate cables

Separate cables provide a measure of increased reliability over circuits in a single cable, since defects or repair work should not affect more than one cable at a time. However, construction equipment can damage both cables.

Copyright © 2004 IEEE. All rights reserved.

Copyright The Institute of Electrical and Electronics Engineers, Inc.
Provided by IHS under license with IEEE
No reproduction or networking permitted without license from IHS
Not for Resale

5.3.3.2 Separate cables in separate ducts

This arrangement decreases the possibility of coincident trouble in both cables, but experience has shown that major disturbances can affect both.

5.3.3.3 Separate routing

Separate routing minimizes the possibility of simultaneous physical damage to the two channels. However, in many cases, this may require special construction and additional charges at the terminal location since these are very often fed by only one cable route. Separate routing is preferred and should be obtained whenever feasible. However, the use of separate cables and separate routing does not in itself reduce the exposure to induction or the effects of GPR.

5.4 Signal transmission

5.4.1 Audio frequency considerations

It is essential that the range of frequencies employed for audio-tone relaying fall within the frequency capabilities of the channel to be used. The tone frequency, bandwidth, and selectivity are the variables to be specified in the application of tone equipment. In some applications, the system requirements dictate a specific choice of tone equipment, while in other situations the application engineer has several alternatives.

There is a relationship among the following considerations:

a) Response time of a voice-band voice grade channel
b) The number of audio-tone signals possible on a voice-band voice grade channel
c) The selectivity of the receiver band-pass filters in terms of adjacent signal rejection
d) Usable frequency spectrum of a voice-band voice grade channel

The local telephone company should be consulted on the use of all frequencies so that restricted frequencies, such as those used when remote loopback testing is employed, are not selected.

5.4.2 Audio-tone signal spacing

The spacing of individual tone signals will be governed by several factors. Included in these are the bandwidth of the signal and required attenuation of adjacent band signals. Bandwidth requirements are based on required maximum relay times. The required attenuation of adjacent signals depends on receiver filters, transmit levels, and line attenuation. This bandwidth and signal spacing will limit the number of similar tone signals that may be assigned to a given voice grade channel.

The separation between any two signals utilizing a common voice grade channel should consider the steepness of the skirts of the filter characteristic because the operating frequencies of one signal must be attenuated sufficiently to prevent interference with the operating frequencies of the adjacent signal. The wide bandwidth necessary for high-speed operation limits the lowest usable frequency to about 1000 Hz. This in turn limits the number of high-speed channels. The manufacturer of such equipment will recommend the channel spacing for a particular application.

5.4.3 Voice grade channel maintenance

In the interest of good operating practice, it is imperative that the power and telephone companies agree at the time the circuit is installed as to the procedure to be followed in obtaining clearance for any subsequent channel testing by the telephone company. In general, maintenance tests on private line voice grade channels

 --`,,,,,,-`-`,,`,,`,`,,`---
Copyright © 2004 IEEE. All rights reserved.

Copyright The Institute of Electrical and Electronics Engineers, Inc.
Provided by IHS under license with IEEE
No reproduction or networking permitted without license from IHS Not for Resale

are performed by telephone companies only after receiving a customer trouble report. When voice grade-channel maintenance testing is being performed, test signals will be placed on the lines.

5.4.4 Maximum usable circuit attenuation (operating range)

The operating range of tone equipment is a statement of the communication circuit attenuation in decibels, through which the equipment can function satisfactorily. The maximum usable circuit attenuation is the difference between the level of the applied power permitted on the voice grade line and the maximum sensitivity of the receiver, taking noise conditions into consideration.

Operation with maximum permissible signal attenuation does not provide any insurance against the possibility of increases in circuit attenuation that can occur in most systems. For example, a tone receiver designed for a maximum sensitivity of –35 dBm can operate through a 27 dB loss communication circuit where the tone transmitter can deliver a –8 dBm signal to the customer-telephone company interface. Maximum range of the tone equipment is thus 27 dB.

Conservative system design does not allow for normal operation through maximum attenuation but through a value several dB lower in order to have some signal in reserve when circuit attenuation becomes abnormal for any reason. Generally, it is advisable to place a limit on the normal attenuation of the transmission channel at approximately 6–10 dB less than the permissible maximum value. The recommended way of deciding how much signal margin is needed is to determine the maximum increase in attenuation likely to be experienced and to adopt this figure as the amount of signal margin.

An example is included in Annex B to clarify this matter of signal level, signal margin, and receiver sensitivity.

5.4.5 Receiver sensitivity

Maximum receiver sensitivity is the minimum tone level at which any increase in that level causes no appreciable increase in or change of state of the receiver output. Its value is in dBm and typically is measured at the input to the receiver system. Most audio-tone receivers can be adjusted to receive signal levels down to –40 dBm. If the receiver is adjusted for maximum sensitivity, local transmitter inter-modulation products may cause interference by falling within the receiver band pass. This condition would normally occur when two or more transmitters are paralleled. Another factor that governs the receiver sensitivity setting is the security of the channel against undesired blocking or tripping from noise.

Typical nominal receiver signal levels are –20 dBm. However, specific levels are dependent upon the frequencies used and should take into account the channel loss and attenuation distortion specifications given in Table 1. Channel losses less than those given in Table 1 may be negotiated with the telephone company, but may require special engineering and additional charges.

5.5 Operating time of the system

5.5.1 General

The main objective of the pilot type of protective relaying is to provide simultaneous high-speed tripping at all terminals for all equipment and line faults in the zone of protection. In order to achieve this objective, the speed of operation must be made as fast as possible, consistent with well-designed equipment and channels.

Relay system time is generally separated into two parts: protective relay operating time and tone communication time.

Copyright © 2004 IEEE. All rights reserved.

Copyright The Institute of Electrical and Electronics Engineers, Inc.
Provided by IHS under license with IEEE
No reproduction or networking permitted without license from IHS Not for Resale

Tone communication time includes the interval between transmitter keying by the protective relays and receiver output. The primary sources of delay in the audio-tone system are as follows:

a) Transmitter band-pass filters
b) Propagation delay of voice-grade line facilities (see 4.3.5.3)
c) Delay of voice-grade terminal equipment (see 4.3.5.3)
d) Receiver band pass filter discriminator (frequency shift) or level detector integrator (amplitude modulation)
e) Output relay or circuit

5.5.2 High-speed systems

High-speed relay communication systems are considered to have operating times of less than 20 ms. Frequency shift designs are generally used for high-speed systems. Frequency shift equipment may have a response time as fast as 4 ms, exclusive of protective relay and channel delay time.

5.5.3 Medium-speed systems

Other audio-tone communication systems having response time in excess of 20 ms are in service, but in view of present high-speed equipment available, it is not anticipated that they will have wide use in the future.

5.6 Noise and noise suppression

5.6.1 General

Noise is considered to be extraneous frequencies tending to interfere with the correct detection of those signals that it is desired to receive.

On voice grade facilities, noise is categorized as being either of the message circuit or the impulse type, both of which are measurable and have been previously described in 4.3.5.4, 4.3.5.5, and 4.3.5.6. The operational performance of various systems in the presence of noise is evaluated in terms of these quantities.

Due to the randomness often characteristic of noise wave forms, measurements depend, in part, upon the properties of the measuring device. Unless otherwise stated, reference to noise on voice grade facilities assumes standard measuring equipment.

5.6.1.1 Noise terms

For applications that involve the performance of audio-tone systems or other equipment on voice grade channels, noise should be evaluated in terms of the measurable quantities specified in 5.6.1. Other noise terms are sometimes used in relation to communication channels and often tend to be misleading. These include the terms *circuit, background, thermal, random, white, static, (atmospherics),* and *ambient noise,* which are defined as follows:

a) *Circuit noise.* In voice grade practice, this is noise that is brought to the receiver electrically from a voice grade system excluding noise picked up acoustically by the voice grade transmitters.
b) *Background noise.* The total system noise independent of the presence or absence of a signal
c) *Thermal noise.* Noise occurring in electric conductors and resistors and resulting from the random movement of free electrons contained in the conducting material. The name derives from the fact that such random motion depends on the temperature of the material. Thermal noise has a flat power spectrum out to extremely high frequencies.

Copyright © 2004 IEEE. All rights reserved.

Copyright The Institute of Electrical and Electronics Engineers, Inc.
Provided by IHS under license with IEEE
No reproduction or networking permitted without license from IHS Not for Resale

d) *Random noise.* Noise that comprises transient disturbances occurring at random. The term is most frequently applied to the limiting case where the number of transient disturbances per unit time is large, so that the spectral characteristics are the same as those of thermal noise.

e) *White noise.* Either random or impulse type, that has a flat frequency spectrum at the frequency range of interest. This type of noise is used in the evaluation of systems on a theoretical basis and is produced for testing purposes by a white noise generator. The use of the term should be limited and is not good usage in describing message circuit noise.

f) *Static noise or atmospherics*. Interference caused by natural electric disturbances in the atmosphere, or the electromagnetic phenomena capable of causing such interference.

g) *Ambient noise.* Acoustic noise existing in a room or other location.

5.6.2 Effect of noise on receiver operation

Noise can either cause the receiver to trip when it is not required or fail to trip when required. The ability of a receiver to operate properly is measured against the SNR at the input of the receiver. SNR is the ratio of signal power to noise power.

The receiver signal level should be well above the background or quiescent noise level, so that the receiver will be secure against operation due to strong impulse noise such as can be generated within the power station or by lightning. Noise suppression circuits or devices can be used to improve security. When these circuits or devices are used to block tripping, there is a possibility of failure to trip during power system faults.

The received signal level should be as high as practical not only to permit reduced receiver sensitivity but also to insure that the trip signal can override the unusually high noise level generally encountered during power system faults. Sources of this noise include protective gap firing and increased metallic (transverse) 60 Hz voltage and its harmonics due to induction.

Note that power system protective relay channels have an extremely stringent problem as compared with other services, since they are needed only during the worst period of noise; further, an occasional false operation is intolerable. Although other services have operated successfully at lower received signal levels, experience indicates that –20 dBm is a good received signal level for protective relaying services. This is particularly true for direct transfer tripping systems.

5.6.3 Sources of noise

5.6.3.1 Power system induction

Induction from power system faults unavoidably appears on the voice grade cable pair. Well-balanced voice grade circuits (with respect to ground), along with the proper protective devices, will minimize the amount of longitudinal (common mode) voltage that is converted into metallic or wire-to-wire voltage.

During faults, the metallic voltage could readily reach 10 V; if one wire becomes grounded, several hundred volts or more could be encountered. Some of the harmonics present in the power system inducing current are bound to fall within the pass band of the tone receiver. Distortion of the induced 60 Hz voltage will increase the relative level of these harmonics. This 60 Hz distortion, which is due to the nonlinearity of the voice grade channel components, may be greatly increased during the very high metallic voltage levels caused by an accidental ground. If these harmonics concentrate in the trip band, they can cause undesired tripping, while, if they concentrate in the guard band or in the squelch band, they can block a desired trip if they are of higher level than the trip signal.

If the 60 Hz metallic voltage level causes breakdown of the surge protection within the tone equipment, tripping may not be effected because the surge protection short-circuits the trip signal in an improperly

Copyright © 2004 IEEE. All rights reserved.

Copyright The Institute of Electrical and Electronics Engineers, Inc.
Provided by IHS under license with IEEE
No reproduction or networking permitted without license from IHS Not for Resale

protected voice grade line. This breakdown can also cause loss of guard tone, which unblocks the tone receiver; and if filter ringing occurs, a false trip could also occur. However, if surge protectors are connected to the tone line through drainage reactors as discussed in 4.3.3.5 and shown in parts b), c), and d) of Figure 3, the tone signals (either guard or trip) will not be shorted out, but some arcing noise will be introduced into the line. The type and arrangement of surge protection utilized should be discussed with the telephone company.

5.6.3.2 Surge phenomena

Surges, in addition to their destructive effects, can cause undesired tripping if they cause filter ringing at the trip frequency. This effect can be minimized by surge protectors in the tone equipment. This protector breakdown voltage should be as high as possible to minimize breakdown due to metallic voltages. The permissible level of metallic voltages will ordinarily be lower than the limiting value that the voice grade system permits; accordingly, surge protection should be provided with the tone equipment in addition to whatever protection is installed by the telephone company.

5.6.3.3 Shorting, opening, and grounding of the voice grade channel

Disturbances to the voice grade circuit can be detrimental to relay systems. Equipment band-pass filters may be shock-excited by momentary disturbances causing generation of many frequency components. This shock excitation can be caused by the sudden change in the terminating impedance, particularly where a transmitter and receiver are paralleled, or it can be caused by the sudden introduction of an abnormally high 60 Hz voltage due to a ground on the voice grade channel.

Filter ringing is not the only cause of possible undesired tripping. The high 60 Hz voltage can be distorted by the nonlinearity of voice grade-pair protective components resulting in the generation of sizable harmonic frequencies, which may fall predominantly in the receiver trip band.

Non-permissive relay systems are especially prone to troubles caused by inadvertent grounding of the facility. The disturbances produced by solid and intermittent grounds can cause both the trip and guard frequency output relays to flutter and result in the tripping of a circuit breaker when coincident closing of the trip and guard contacts occur. Therefore, to avoid inadvertent grounds, considerable care should be exercised in the design, maintenance, and testing techniques on facilities for this type of system.

5.6.4 SNR comparison circuits

These circuits are used to compare the incoming signal level to the noise level and operate rapidly to block the receiver to prevent a false operation. The SNR circuit uses a sampling of noise from an area of the band that contains no signal, and compares that level to the signal level of the monitored channel to determine if the receiver is to be blocked. The noise monitoring area may be out-of-band, such as the 300–1000 Hz area, or it may be in-band. The in-band type of SNR detectors tend to make the channel more dependable since the noise being monitored is the noise seen by the receiver and may cause a false operation. On the other hand, an SNR detector, which monitors out-of-band noise in the 300–1000 Hz area, will make the channel more secure since the noise level in this area is usually higher than in the rest of the band. The out-of-band circuits are more secure since the receiver will be blocked before the in-band noise to the receiver reaches the critical level.

Either circuit will generally provide a better overall performance than the older type *squelch* circuit, which monitored the absolute level of noise in the 300–1000 Hz band and blocked the receiver operation based on this information alone. The in-band SNR detector will provide the best dependability with a very small sacrifice in security when compared to that of systems using out-of-band detection. However, the channel using in-band SNR detection will have to pay a small price in terms of channel time because the monitoring takes place through the same channel bandwidth as the information. Thus, the trip output must be delayed to allow the SNR detector a chance to operate.

--`,,,,,,-`-`,,`,,`,`,,`---
Copyright © 2004 IEEE. All rights reserved.

Copyright The Institute of Electrical and Electronics Engineers, Inc.
Provided by IHS under license with IEEE
No reproduction or networking permitted without license from IHS
Not for Resale

5.6.5 Balanced circuits

In the voice grade communications industry, extensive use is made of balanced transmission techniques. One of the principal purposes for the use of balanced communications circuits is to eliminate or significantly reduce the longitudinal to metallic conversion of noise. These techniques involve the use of balanced transformers, mutual drainage reactors, balanced filters, balanced equalizers, and many similar devices as well as balanced cable pairs. This latter factor is most important and involves basically the questions of capacitance and resistance unbalances that must be minimal. Just how well a communication circuit is balanced will determine its effectiveness in reducing the effects of the noise. With respect to audio-tone channels, the reduction of noise is of critical importance.

6. Installation and testing

6.1 Installation considerations

6.1.1 Accessibility

The tone equipment should be mounted on relay racks or in cabinets readily accessible from front and back for ease of testing, inspection, and maintenance. The location of the audio-tone equipment relative to the associated protective relays should be considered to facilitate testing and maintenance and to reduce the exposure of the keying leads.

6.1.2 Environment

6.1.2.1 Ambient temperature

Indoor installations are preferable because temperature variation can be more conveniently controlled and maintenance in inclement weather is more readily accomplished.

Audio-tone equipment should be capable of functioning within the same temperature ranges as the equipment with which it operates, as specified in IEEE Std C37.90-1989. Particular attention should be given to the location of any heat generating components or nearby heat generating equipment.

6.1.2.2 Vibration

Shock and vibration have little effect on equipment employing solid-state output devices. However, sensitive electro-mechanical output relays may operate incorrectly when subjected to shock or vibration.

6.1.3 Equipment identification

Identification of audio-tone receivers and transmitters is desirable. In order to minimize any errors in testing or blocking, the companion transmitters and receivers at all terminals should be similarly identified. For example, if trouble developed on Receiver No. 4 at station X or on the associated leased channel, instructions to block or place in the *test position* the tone equipment numbered 4 at all terminals would minimize errors.

For the same reasons, the channel facility should also be designated and identified with the tone equipment in the same relaying system. Relay communication channels should be separated from other communication channels in the station or substation to minimize electric interference and inadvertent contact. They should be adequately identified at all appearances.

Copyright © 2004 IEEE. All rights reserved.

Copyright The Institute of Electrical and Electronics Engineers, Inc.
Provided by IHS under license with IEEE
No reproduction or networking permitted without license from IHS Not for Resale

Drawout modules should be keyed to prevent erroneous interchange of modules. Provision should be available for placing identification labels on both drawout module and corresponding rack position.

6.1.4 Keying lead length

The power required to operate the keying input of many types of audio-tone equipment is small, perhaps 1–3 W at rated keying voltage and a fraction of this power at minimum keying voltage. When wiring to the keying circuit is long, as might be, for example, if extended to a circuit breaker or disconnect auxiliary switch in the switch yard, the wiring may pick up interfering signals from switch yard transients and this may result in false keying. Keying circuit wiring should be contained in shielded cable if this practice is recommended by the equipment supplier or if there is concern about the exposure of long keying leads.

Long keying leads, especially those in shielded cable, may have appreciable capacitance to ground. Surge protection capacitors in the audio-tone keying input circuit, or on the output contacts of protective relays that key the transmitter, may also have significant capacitance to ground. Inadvertent grounds on the station dc system, or the closure of test switches in the keying circuits, can cause momentary capacitor charging or discharging transient currents to flow through the keying circuit. These transients may be of sufficient duration to cause a false trip output of the tone circuit.

The addition of an external burden resistor across the tone transmitter keying input, to raise the keying power requirement and reduce the RC time constant (i.e., the time required for a capacitor to discharge through a resistor), is generally a simple solution to false keying from capacitance charging transients. Another area of improvement in this regard can be made if the keying inputs do not activate to voltages below 50% station battery. This will further increase the energy required for capacitive charging currents to cause a false key. The actual capacitance of existing keying circuits can be determined by measuring the energy in the transients with a digital oscilloscope. The safety margin of the completed design can then be evaluated.

6.2 Testing

6.2.1 Tone equipment test and monitoring facilities

Audio-tone systems designed for relaying functions should be provided with trip cutoff switches, guard and trip lights, and alarms, as well as the necessary test switches for maintenance.

Test facilities may include front panel jacks that permit measurement of the dB output level of the transmitter, input level to the receiver, and input level to a squelch receiver, if used. Some users install voltmeters at the output of each transmitter and milliammeters in the output of each receiver and others employ a built-in test pad to simulate a given dB signal attenuation.

For solid-state equipment, card extenders or *cheater* cords should be provided for troubleshooting a card in service.

6.2.2 Facilities for isolating and testing voice grade channel(s)

Double pole test switches or an equivalent disconnecting means should be installed in terminal equipment cabinets for disconnecting the voice grade channel for tests by both the power company and the telephone company. Where three terminal lines are involved, a test switch should be provided in each of the two voice grade channels that are bridge-tapped at one terminal.

Copyright © 2004 IEEE. All rights reserved.

Copyright The Institute of Electrical and Electronics Engineers, Inc.
Provided by IHS under license with IEEE
No reproduction or networking permitted without license from IHS Not for Resale

6.2.3 In-service and out-of-service operational testing

In all audio-tone relay systems, the channel and to some extent the tone equipment is continuously monitored by a guard tone. However, periodic tests should be made to determine if the tone equipment remains capable of performing its relaying function.

Test switches for dual channel direct transfer trip schemes can be so arranged that in-service tests can be conducted on each channel without removing the protected equipment from service or causing a trip of those facilities.

Permissive schemes using only one channel can also be tested while the protected facilities remain in-service. However, undesired tripping of a terminal may occur if a fault to the power system occurs on any external facility during the in-service test.

In-service checkback test facilities can be provided so that a signal from the local transmitter will cause the remote receiver to key the remote transmitter when the local test switch is held in the test position for a few seconds. The operation of both trip and guard contacts can be checked by this method.

Local loop testing (manual or automatic) can be provided when transmitters and receivers are applied as bidirectional, use the same audio frequencies, and operate on a four-wire circuit.

6.3 Periodic maintenance

6.3.1 Test equipment

An oscilloscope, audio-signal generator, electronic voltmeter, and frequency counter are recommended for testing and maintenance. A digital timer is recommended for checking time of operation, particularly for higher speed equipment. A wave analyzer or frequency selective electronic voltmeter has also been found to be useful for testing and maintaining equipment.

6.3.2 Maintenance schedule

Nearly all users make periodic maintenance checks, but some rely on signal alarms or operational tests to indicate the need for maintenance.

Periodic maintenance should include tests on the communication channel and protection on both sides of the interface as well as the tone equipment. Periodic maintenance should include measurements of the transmit and receive levels. A comparison should be made between these levels and those recorded at the time of installation or at the time of the last alignment. If the levels measured indicate that the voice grade circuit has deteriorated outside of limits in Table 1 (i.e., transmit level unchanged but a different receive level), the voice grade circuit should be suspected. The tone equipment should not be adjusted until corrections are made to the voice grade circuit.

Copyright © 2004 IEEE. All rights reserved.

Copyright The Institute of Electrical and Electronics Engineers, Inc.
Provided by IHS under license with IEEE
No reproduction or networking permitted without license from IHS Not for Resale

Annex A

(informative)

Bibliography

[B1] Bell System Technical Reference PUB 41004, *Data Communications Using Voiceband Private Line Channels,* American Telephone & Telegraph Company, October 1973.

[B2] Bell System Technical Reference PUB 41011, *Transmission Specifications For Voice Grade Private Line Audio Tone Protective Relaying Channels,* American Telephone and Telegraph Company, March 1978.

[B3] Brunssen, James E., "Protection Using Neutralizing Transformer; Performance Analysis Using Volt-Time Area Approach," *IEEE Transactions on Power Apparatus and Systems,* pp. 392–398, March/April 1978.

[B4] *Engineering Design Information for Power Industry Communications Services,* American Telephone and Telegraph Company, January 1971.

[B5] Larsen, Stephen L., "Substation Ground-Resistance Measurements; Application of Protection of Metallic Communication Circuits," *IEEE Transactions on Power Apparatus and Systems,* pp. 1666–1673, September/October 1975.

[B6] *Telecommunications Transmission Engineering,* Volumes 1 and 2, American Telephone and Telegraph Company, 1977.

[B7] Tibensky, M. S., "Ground Potential Rise Due to Various Faults, Calculation Methods: Protection of Communication Circuits Entering Stations," *IEEE Transactions on Power Apparatus and Systems,* pp. 4785–4794, December 1981.

[B8] *Transmission Systems for Communications,* Fifth Edition, Bell Telephone Laboratories, Inc., 1982.

[B9] Zupa, F. P. and Laidig, J. F., "A Practical Ground Potential Rise Prediction for Power Stations," *IEEE Transactions on Power Apparatus and Systems,* pp. 207–216, January/February 1980.

 --`,,,,,,-`-`,,`,,`,`,,`---

Copyright © 2004 IEEE. All rights reserved.

Copyright The Institute of Electrical and Electronics Engineers, Inc.
Provided by IHS under license with IEEE
No reproduction or networking permitted without license from IHS

Not for Resale

Annex B

(informative)

Example of audio-tone circuit considerations

Given: two frequency shift protective relay systems are to be operated on a single-leased voice grade channel. The two systems operate at center frequencies of 1105 and 2125 Hz with a frequency shift of ± 125 Hz and a receiver bandwidth of 500 Hz for each signal frequency. Assume that an unconditioned channel is being considered for this service.

Subclause 4.3.5.2 states that the 1004 Hz attenuation will be 16 dB, and 4.3.5.1 states that attenuation distortion of –2 to +8 dB over the band 500–2500 Hz can be expected for unconditioned channels. It is, therefore, reasonable to assume that the channel attenuation will be approximately 16 dB at 1105 Hz and as much as 24 dB at 2125 Hz.

Since the maximum allowable composite root-mean-square input to the leased channel was given in 4.3.2.1 as 0 dBm (0 dB relative to 1 mW), we can adjust each of the two tones for half this transmitted power, or –3 dBm. The expected signal powers at the receiver are approximately –19 dBm at 1105 Hz and –27 dBm at 2125 Hz.

If the receiver has a sensitivity setting to monitor for loss of tone, a reasonable threshold adjustment for this example would be –35 dBm, providing an 8 dB margin for the 2125 Hz signal. This will provide sufficient margin for short-term and long-term variations as specified in Table 1.

Receiver designs seldom allow for sensitivities lower than –40 dBm, and it is preferable not to operate at the minimum signal input. This constraint, together with the greater high frequency attenuation variation, may limit the usage of the higher frequency protective relaying systems or the use of more than one protective relaying system on a single unconditioned voice grade channel. A more reliable design may call for the use of a separate voice grade channel for each relaying system or for use of a conditioned voice grade channel with less attenuation variation at the higher frequencies.

The noise conditions at the receiver can be checked as follows. Assuming a maximum channel length of less than 100 miles, the expected message circuit noise is given in Table 1 as 31 dBrnC (dB relative to reference noise with C-message weighting) at the receiver input. To find the amount of noise seen by a receiver detector with a 500 Hz bandwidth, we assume the noise is uniformly distributed across the voice band (approximately 3000 Hz wide) and convert as follows:

a) Expected noise input in 3000 Hz bandwidth = 31 dBrnC; from preceding text
b) 0 dBrnC of white noise in 3000 Hz bandwidth = –88.5 dBm; defined in 4.3.5.4
c) Noise input power in 3000 Hz bandwidth = –88.5 dBm + 31 dB = –57.5 dBm
d) Bandwidth correction for flat noise = 10 log (bw2/bw1); in dB
e) Correction from 3000 Hz to 500 Hz = 10 log (500/3000) = –7.78 dB
f) Noise input power in 500 Hz bandwidth = –57.5 dBm + (–7.78 dB) = –65.28 dBm

The –65 dBm noise in the 500 Hz detector bandwidth is negligibly low compared to the received signal powers of –19 dBm (1105 Hz signal) and –27 dBm (2125 Hz signal). However, it should be noted that the noise values given in Table 1 are expected (mean) values and not worst case and that the received signal power can be further reduced by short-term and long-term variations. In addition, it is important to realize that the noise values in Table 1 are the expected values for normal voice grade circuits. It is quite possible that a particular circuit to a power station may be subjected to severe induction, which may cause the total

Copyright © 2004 IEEE. All rights reserved.

Copyright The Institute of Electrical and Electronics Engineers, Inc.
Provided by IHS under license with IEEE
No reproduction or networking permitted without license from IHS
Not for Resale

noise to be considerably greater than the values of Table 1. All of these aspects should be carefully evaluated in the overall design.

Perhaps more critical than simple signal-to-noise specifications are considerations related to operation of the noise squelch. The very special security requirement of protective relaying dictates that the receiver have the capability of monitoring circuit noise so as to squelch the circuit in the presence of high noise, and thus prevent false operation. Specific squelch criteria depend on the receiver design and the relative emphasis placed on dependability and security. However, an approach once fairly common in frequency shift terminals was to monitor the noise in the 300–1000 Hz band and to set the squelch threshold to be about 15–20 dB below the received signal power. For our example, such a squelch threshold would be set at about –45 dBm (18 dB below the –27 dBm input power of the 2125 Hz signal) into the receiver's 700 Hz bandwidth detector.

Copyright © 2004 IEEE. All rights reserved.

Copyright The Institute of Electrical and Electronics Engineers, Inc.
Provided by IHS under license with IEEE
No reproduction or networking permitted without license from IHS
Not for Resale

Annex C

(informative)

Signal level measurements and terms

The term dBm is defined as a power level that is referenced to 1 mW. It is usually measured as a voltage at a specified impedance. Measurements involving the application of audio tones over voice grade channels follow the convention shown in Equation (C.1).

$$dBm = 10 \times \log_{10}\left(\frac{\left(\frac{V^2}{Z_{ref}}\right)}{P_{ref}}\right) = 10 \times \log_{10}\left(\frac{\left(\frac{V^2}{600\Omega}\right)}{0.001W}\right) = 10 \times \log_{10}\left(\frac{V^2}{0.6}\right) \quad \text{(C.1)}$$

where

Z_{ref} = 600 Ω
P_{ref} = 1 mW

Table C.1 shows this relationship for a range of values for dBm that are frequently encountered in audio-tone applications and their equivalent voltages at 600 Ω.

Table C.1—Power level in dBm to Vrms at 600 Ω

dBm	Volts (RMS)
–17.8	0.1
–8.2	0.3
–5.7	0.4
–3.8	0.5
0.0	0.78
2.2	1.0
8.2	2.0
11.8	3.0
14.3	4.0
16.2	5.0

A useful relationship to remember is that if the voltage doubles, the value of dBm increases by about six. If the voltage is reduced by half, the value of dBm decreases by about six.

The term dB is dimensionless and is defined as the ratio of two voltage or power measurements.

For power ratios, use Equation (C.2):

Copyright © 2004 IEEE. All rights reserved.

Copyright The Institute of Electrical and Electronics Engineers, Inc.
Provided by IHS under license with IEEE
No reproduction or networking permitted without license from IHS Not for Resale

$$dB = 10 \times \log_{10}\left(\frac{P_2}{P_1}\right) \quad \text{(C.2)}$$

where

P_1 is the input power,
P_2 is the output power.

For voltage ratios, use Equation (C.3):

$$dB = 20 \times \log_{10}\left(\frac{V_2}{V_1}\right) \quad \text{(C.3)}$$

where

V_1 is the input voltage,
V_2 = output voltage, as long as the characteristic impedance of the two voltage measurements are the same.

Copyright © 2004 IEEE. All rights reserved.

Copyright The Institute of Electrical and Electronics Engineers, Inc.
Provided by IHS under license with IEEE
No reproduction or networking permitted without license from IHS
Not for Resale