IEEE Std C37.91-2000
(Revision of
IEEE Std C37.91-1985)

IEEE Guide for Protective Relay Applications to Power Transformers

Sponsor

Power Systems Relay Committee
of the
IEEE Power Engineering Society

Approved 8 March 2000

IEEE-SA Standards Board

Abstract: The protection of power transformers is covered; various electrical protection schemes are explored; and guidelines are given for the application of these schemes to transformers. Alternative detection methods including mechanical, thermal, and gas analysis are discussed.
Keywords: power, protection, relaying, transformer

The Institute of Electrical and Electronics Engineers, Inc.
3 Park Avenue, New York, NY 10016-5997, USA

Copyright © 2000 by the Institute of Electrical and Electronics Engineers, Inc.
All rights reserved. Published 9 October 2000. Printed in the United States of America.

Print: ISBN 0-7381-1976-8 SH94830
PDF: ISBN 0-7381-1977-6 SS94830

No part of this publication may be reproduced in any form, in an electronic retrieval system or otherwise, without the prior written permission of the publisher.

Copyright The Institute of Electrical and Electronics Engineers, Inc.
Provided by IHS under license with IEEE
No reproduction or networking permitted without license from IHS
Not for Resale

IEEE Standards documents are developed within the IEEE Societies and the Standards Coordinating Committees of the IEEE Standards Association (IEEE-SA) Standards Board. Members of the committees serve voluntarily and without compensation. They are not necessarily members of the Institute. The standards developed within IEEE represent a consensus of the broad expertise on the subject within the Institute as well as those activities outside of IEEE that have expressed an interest in participating in the development of the standard.

Use of an IEEE Standard is wholly voluntary. The existence of an IEEE Standard does not imply that there are no other ways to produce, test, measure, purchase, market, or provide other goods and services related to the scope of the IEEE Standard. Furthermore, the viewpoint expressed at the time a standard is approved and issued is subject to change brought about through developments in the state of the art and comments received from users of the standard. Every IEEE Standard is subjected to review at least every five years for revision or reaffirmation. When a document is more than five years old and has not been reaffirmed, it is reasonable to conclude that its contents, although still of some value, do not wholly reflect the present state of the art. Users are cautioned to check to determine that they have the latest edition of any IEEE Standard.

Comments for revision of IEEE Standards are welcome from any interested party, regardless of membership affiliation with IEEE. Suggestions for changes in documents should be in the form of a proposed change of text, together with appropriate supporting comments.

Interpretations: Occasionally questions may arise regarding the meaning of portions of standards as they relate to specific applications. When the need for interpretations is brought to the attention of IEEE, the Institute will initiate action to prepare appropriate responses. Since IEEE Standards represent a consensus of all concerned interests, it is important to ensure that any interpretation has also received the concurrence of a balance of interests. For this reason, IEEE and the members of its societies and Standards Coordinating Committees are not able to provide an instant response to interpretation requests except in those cases where the matter has previously received formal consideration.

Comments on standards and requests for interpretations should be addressed to:

Secretary, IEEE-SA Standards Board
445 Hoes Lane
P.O. Box 1331
Piscataway, NJ 08855-1331
USA

Note: Attention is called to the possibility that implementation of this standard may require use of subject matter covered by patent rights. By publication of this standard, no position is taken with respect to the existence or validity of any patent rights in connection therewith. The IEEE shall not be responsible for identifying patents for which a license may be required by an IEEE standard or for conducting inquiries into the legal validity or scope of those patents that are brought to its attention.

IEEE is the sole entity that may authorize the use of certification marks, trademarks, or other designations to indicate compliance with the materials set forth herein.

Authorization to photocopy portions of any individual standard for internal or personal use is granted by the Institute of Electrical and Electronics Engineers, Inc., provided that the appropriate fee is paid to Copyright Clearance Center. To arrange for payment of licensing fee, please contact Copyright Clearance Center, Customer Service, 222 Rosewood Drive, Danvers, MA 01923 USA; (978) 750-8400. Permission to photocopy portions of any individual standard for educational classroom use can also be obtained through the Copyright Clearance Center.

--`,,`,,`,,`,,`,,`---
Copyright The Institute of Electrical and Electronics Engineers, Inc.
Provided by IHS under license with IEEE
No reproduction or networking permitted without license from IHS
Not for Resale

Introduction

(This introduction is not part of IEEE Std C37.91-2000, *IEEE Guide for Protective Relay Applications to Power Transformers*.)

This is a revision of IEEE Std C37.91-1985, IEEE Guide for Protective Relay Applications to Power Transformers. This guide will aid in the effective application of relays and other devices for the protection of power transformers.

In this revision several areas have been improved. Most notably:

— Several figures were corrected.

— Subclauses 5.5.2 and 6.2.3 on current inrush were rewritten to include a new form of inrush restraint.

— Current transformer connections were updated in 5.4 to be in line with IEEE Std C37.110-1996, IEEE Guide for Application of Current Transformers Used for Protective Relaying Purposes.

— Geomagnetic influence on transformers and protective relays is discussed in Clause 13.

— Clause 11, Gas analysis, was revised to reflect current philosophy and practice.

Participants

At the time this guide was completed, the Working Group on Protective Relay Applications to Power Transformers had the following membership:

Roger Hedding, *Chair*
Robert Haas, *Vice Chair*

Richard F. Angle
Graham Clough
Stephen P. Conrad
Mark Conroy
Clifford Downs
Vern Dvorak
Philip Engel
Stephen E. Grier
Hans Heining-Triebs
John J. Horwath
Barry Jackson
Hardy J. King
Bradley D. Nelson
Miriam P. Sanders
Gerry Schmitt
James E. Stephens
Malcolm Swanson
Jerome B. Williams
Murty V. Yalla

Copyright © 2000 IEEE. All rights reserved.

Copyright The Institute of Electrical and Electronics Engineers, Inc.
Provided by IHS under license with IEEE
No reproduction or networking permitted without license from IHS
Not for Resale

The following members of the balloting committee voted on this standard:

Richard F. Angle
John Appleyard
Robert W. Beckwith
Stuart Borlase
John Boyle
John Burger
Jeffrey A. Burnworth
Daniel Carreau
Carlos H. Castro
Simon R. Chano
Stephen P. Conrad
Carey J. Cook
Robert W. Dempsey
Clifford Downs
Paul R. Drum
Walter Elmore
Ahmed Elneweihi
Philip Engel
Jonathan D. Gardell
Tony Giuliante
Stephen E. Grier
Robert W. Haas
Roy E. Hart
Irwin O. Hasenwinkle
Roger A. Hedding
Charles F. Henville
Jerry W. Hohn
Dennis K. Holstein
Stanley H. Horowitz
John J. Horwath
James D. Huddleston, III
James W. Ingleson
Barry Jackson
Herbert Jacobi
Carl Kinsley
Joseph L. Koepfinger
W. C. Kotheimer
Sture O. R. Lindahl
William Lowe
W. J. Marsh, Jr.
Michael J. McDonald
Jeffrey L. McElray
Gary L. Michel
George R. Nail
Bradley D. Nelson
George C. Parr
Robert D. Pettigrew
Radhakrishna V. Rebbapragada
Mohindar S. Sachdev
Miriam P. Sanders
Tarlochan Sidhu
Veselin Skendzic
Peter A. Solanics
Kevin A. Stephan
James E. Stephens
Richard P. Taylor
James S. Thorp
Donald R. Volzka
Charles L. Wagner
William P. Waudby
Jerome B. Williams
Donna Williams
Murty V. Yalla
John A. Zipp
Stan Zocholl

This standard is dedicated to the memory of Graham Clough, who passed away during the final stages of preparation of this document. He will be remembered for his contributions to this document and his service to the relay industry.

When the IEEE-SA Standards Board approved this standard on 8 March 2000, it had the following membership:

Richard J. Holleman, *Chair*
Donald N. Heirman, *Vice Chair*
Judith Gorman, *Secretary*

Satish K. Aggarwal
Dennis Bodson
Mark D. Bowman
James T. Carlo
Gary R. Engmann
Harold E. Epstein
Jay Forster*
Ruben D. Garzon
James H. Gurney
Lowell G. Johnson
Robert J. Kennelly
E. G. "Al" Kiener
Joseph L. Koepfinger*
L. Bruce McClung
Daleep C. Mohla
Robert F. Munzner
Louis-François Pau
Ronald C. Petersen
Gerald H. Peterson
John B. Posey
Gary S. Robinson
Akio Tojo
Hans E. Weinrich
Donald W. Zipse

*Member Emeritus

Also included is the following nonvoting IEEE-SA Standards Board liaison:

Robert E. Hebner

Noelle D. Humenick
IEEE Standards Project Editor

Copyright © 2000 IEEE. All rights reserved.
Copyright The Institute of Electrical and Electronics Engineers, Inc.
Provided by IHS under license with IEEE
No reproduction or networking permitted without license from IHS
Not for Resale

Contents

1. Overview 1

1.1 Scope 1
1.2 Purpose 1

2. References 1

3. Philosophy and economic considerations 2

4. Types of transformer failures 3

5. Relay current 4

5.1 Minimum internal faults 4
5.2 Maximum internal faults 4
5.3 Through-faults 4
5.4 Performance of CTs 5
5.5 Reasons for mismatch current 6

6. Electrical detection of faults 7

6.1 Fuse protection 8
6.2 Differential protection 10
6.3 Overcurrent relay protection 18
6.4 Ground fault protection 21
6.5 Fault detection for special-purpose transformers 23
6.6 Backup and external fault protection 29
6.7 Temperature relays 31
6.8 Miscellaneous relays 31

7. Mechanical detection of faults 31

7.1 Gas accumulator relay 31
7.2 Gas detector relay 32
7.3 Pressure relays 32

8. Thermal detection of abnormalities 34

8.1 Thermal relays for winding temperature 34
8.2 Other means of thermal protection 35
8.3 Testing thermal relays 38

9. Fault clearing 38

9.1 Relay tripping circuits 39
9.2 Circuit breakers 39
9.3 Remote tripping of circuit breakers 39
9.4 Circuit switcher 40
9.5 Fuses 40
9.6 Other practices 40

Copyright © 2000 IEEE. All rights reserved.

Copyright The Institute of Electrical and Electronics Engineers, Inc.
Provided by IHS under license with IEEE
No reproduction or networking permitted without license from IHS
Not for Resale

10. Reenergizing practice 41

11. Gas analysis 42

12. Special protective schemes 42

12.1 Overall unit generator differential 42
12.2 Unit transformer of three-legged core form type 44
12.3 Grounding transformer inside the main transformer differential zone 44
12.4 Unbalanced voltage protection for Y-connected, three-legged, core-type transformers 45
12.5 Differential protection of single-phase transformers connected in three-phase banks 46
12.6 Differential protection of a bank of three single-phase autotransformers with Δ tertiary 47
12.7 Differential protection of single-phase transformers in a three-phase bank with a spare transformer 48

13. Other considerations 49

14. Device numbers 50

Annex A (informative) Application of the transformer through-fault current duration guide to the protection of power transformers 51

Annex B (informative) Bibliography 70

Copyright © 2000 IEEE. All rights reserved.

Copyright The Institute of Electrical and Electronics Engineers, Inc.
Provided by IHS under license with IEEE
No reproduction or networking permitted without license from IHS

Not for Resale

IEEE Guide for Protective Relay Applications to Power Transformers

1.Overview

1.1 Scope

This guide covers practical applications, general philosophy, and economic considerations of power transformer protection.

1.2 Purpose

The purpose of this guide is to aid in the effective application of relays and other devices for the protection of power transformers. Emphasis is placed on practical applications. The general philosophy and economics of transformer protection are reviewed. The types of faults experienced are described, and technical problems with such protection, including current transformer (CT) behavior during fault conditions, are discussed. Various types of electrical, mechanical, and thermal protective devices are also described and associated problems such as fault clearing and reenergizing are discussed.

2.References

This guide shall be used in conjunction with the following publications. When the following standards are superseded by an approved revision, the revision will apply.

IEEE Std 32-1972 (Reaff 1997), IEEE Standard Requirements, Terminology, and Test Procedures for Neutral Grounding Devices.[1]

IEEE Std C37.2-1996, IEEE Standard Electrical Power System Device Function Numbers and Contact Designations.

IEEE Std C37.110-1996 IEEE Guide for the Application of Current Transformers Used for Protective Relaying Purposes.

[1]IEEE publications are available from the Institute of Electrical and Electronics Engineers, 445 Hoes Lane, P.O. Box 1331, Piscataway, NJ 08855-1331, USA (http://standards.ieee.org/).

Copyright © 2000 IEEE. All rights reserved.

Copyright The Institute of Electrical and Electronics Engineers, Inc.
Provided by IHS under license with IEEE
No reproduction or networking permitted without license from IHS
Not for Resale

IEEE Std C57.12.00-2000, IEEE Standard General Requirements for Liquid-Immersed Distribution, Power, and Regulating Transformers.

IEEE Std C57.91-1995, IEEE Guide for Loading Mineral-Oil-Immersed Transformers.

IEEE Std C57.92-1981 (Reaff 1991), IEEE Guide for Loading Mineral-Oil-Immersed Power Transformers Up to and Including 100 MVA with 55 °C or 65 °C Average Winding Rise.[2]

IEEE Std C57.109-1993, IEEE Guide for Liquid-Immersed Transformer Through-Fault-Current Duration.

3.Philosophy and economic considerations

Protective relaying is applied to components of a power system for the following reasons:

a) Separate the faulted equipment from the remainder of the system so that the system can continue to function
b) Limit damage to the faulted equipment
c) Minimize the possibility of fire
d) Minimize hazards to personnel
e) Minimize the risk of damage to adjacent high-voltage apparatus

In protecting some components, particularly high-voltage transmission lines, the limiting of damage becomes a by-product of the system protection function of the relay. However, since the cost of repairing faulty transformers may be great and since high-speed, highly sensitive protective devices can reduce damage and therefore repair cost, relays should be considered for protecting transformers also, particularly in the larger sizes.

Faults internal to a transformer quite often involve a magnitude of fault current that is low relative to the transformer base rating. This indicates a need for high sensitivity and high speed to ensure good protection.

There is no one standard way to protect all transformers, or even identical transformers that are applied differently. Most installations require individual engineering analysis to determine the best and most cost-effective scheme. Usually more than one scheme is technically feasible, and the alternatives offer varying degrees of sensitivity, speed, and selectivity. The plan selected should balance the best combination of these factors against the overall economics of the situation while holding to a minimum

a) Cost of repairing damage
b) Cost of lost production
c) Adverse effects on the balance of the system
d) The spread of damage to adjacent equipment
e) The period of unavailability of the damaged equipment

In protecting transformers, backup protection needs to be considered. The failure of a relay or breaker during a transformer fault may cause such extensive damage to the transformer that its repair would not be practical. When the fault is not cleared by the transformer protection, remote line relays or other protective relays may operate. Part of the evaluation of the type of protection applied to a transformer should include how the system integrity may be affected by such a failure. In this determination, since rare but costly failures are involved, a diversity of opinion on the degree of protection required by transformers might be expected among those familiar with power system relay engineering. The major economic consideration is

[2]This standard has been revised and redesignated to IEEE Std C57.91-1995.

Copyright © 2000 IEEE. All rights reserved.
Copyright The Institute of Electrical and Electronics Engineers, Inc.
Provided by IHS under license with IEEE
No reproduction or networking permitted without license from IHS Not for Resale

not ordinarily the fault detection equipment but the isolation devices. Circuit breakers often cannot be justified on the basis of transformer protection alone. At least as much weight should be given to the service requirements, the operating philosophy, and system design philosophy as to the protection of the transformer. Evaluations of the risks involved and the cost-effectiveness of the protection are necessary to avoid going to extremes. Such considerations involve the art rather than the science of protective relaying. See [B22], [B24], [B29], and [B59][3].

4.Types of transformer failures

The electrical windings and the magnetic core in a transformer are subject to a number of different forces during operation, for example

a) Expansion and contraction due to thermal cycling
b) Vibration
c) Local heating due to magnetic flux
d) Impact forces due to through-fault current
e) Excessive heating due to overloading or inadequate cooling

These forces can cause deterioration and failure of the winding electrical insulation. Table 1 summarizes failure statistics for a broad range of transformer failure causes reported by a group of U.S. utilities over a period of years.

Table 1—Failure statistics for three time periods

	1955–1965		1975–1982		1983–1988	
	Number	**Percent of total**	**Number**	**Percent of total**	**Number**	**Percent of total**
Winding failures	134	51	615	55	144	37
Tap changer failures	49	19	231	21	85	22
Bushing failures	41	15	114	10	42	11
Terminal board failures	19	7	71	6	13	3
Core failures	7	3	24	2	4	1
Miscellaneous failures	12	5	72	6	101	26
Total	262	100	1127	100	389	100

This guide deals primarily with the application of electrical relays to detect the fault current that results from an insulation failure. Clause 5 examines the current a relay can expect to see as a result of various types of winding insulation failures.

The detection systems that monitor other transformer parameters can be used to indicate an incipient electrical fault. Prompt response to these indicators may help avoid a serious fault. For example

a) Temperature monitors for winding or oil temperature are typically used to initiate an alarm requiring investigation by maintenance staff.

[3]The numbers in brackets correspond to the references listed in Annex B of this guide.

Copyright © 2000 IEEE. All rights reserved.

Copyright The Institute of Electrical and Electronics Engineers, Inc.
Provided by IHS under license with IEEE
No reproduction or networking permitted without license from IHS
Not for Resale

b) Gas detection relays can detect the evolution of gases within the transformer oil. Analysis of the gas composition indicates the mechanism that caused the formation of the gas; e.g., acetylene can be caused by electrical arcing, other gases are caused by corona and thermal degradation of the cellulose insulation. The gas detection relays may be used to trip or alarm depending on utility practice. Generally, gas analysis is performed on samples of the oil, which are collected periodically. Alternatively, a continuous gas analyzer is available to allow on-line detection of insulation system degradation.

c) Sudden-pressure relays respond to the pressure waves in the transformer oil caused by the gas evolution associated with arcing.

d) Oil level detectors sense the oil level in the tank and are used to alarm for minor reductions in oil level and trip for severe reductions.

These various relays are discussed in greater detail in later clauses of this guide.

5.Relay current

Two characteristics of power transformers combine to complicate detection of internal faults with current-operated relays

a) The change in magnitude of current at the transformer terminals may be very small when a limited number of turns are shorted within the transformer.

b) When a transformer is energized, magnetizing inrush current that flows in one set of terminals may equal many times the transformer rating. These and other considerations require careful thought to obtain relay characteristics best-suited to the particular application.

5.1 Minimum internal faults

The most difficult transformer winding fault for which to provide protection is the fault that initially involves one turn. A turn-to-turn fault will result in a terminal current of much less than rated full-load current. For example, as much as 10% of the winding may have to be shorted to cause full-load terminal current to flow. Therefore, a single turn-to-turn fault will result in an undetectable amount of current.

5.2 Maximum internal faults

There is no limit to the maximum internal fault current that can flow, other than the system capability, when the fault is a terminal fault or a fault external to the transformer but in the relay zone. The relay system should be capable of withstanding the secondary current of the CT on a short-time basis. This may be a factor if the transformer is small relative to the system fault and if the CT ratio is chosen to match the transformer rating.

5.3 Through-faults

Fault current through a transformer is limited by the transformer and source impedance. While current through a transformer thus limited by its impedance can still cause incorrect relay operations or even transformer failure, CT saturation is less likely to occur than with unlimited currents.

The above favorable aspect may disappear if the transformer protective zone includes a bus area with two or more breakers on the same side of the transformer through which external fault current can flow with no

Copyright © 2000 IEEE. All rights reserved.

Copyright The Institute of Electrical and Electronics Engineers, Inc.
Provided by IHS under license with IEEE
No reproduction or networking permitted without license from IHS Not for Resale

relationship to the transformer rating. An example is a transformer connected to a section of a ring bus with the transformer protection including the ring bus section.

5.4 Performance of CTs

5.4.1 Internal faults

During an internal fault, or a fault external to the transformer but in the protected zone of the relay system, the CTs may saturate, perhaps severely. Severe CT saturation can cause the harmonic restraint unit to pick up, thereby resulting in the failure of a transformer differential relay to operate or in a delay of its operation. The effect depends on the relay's response to distorted current. On a transient basis, with a saturated CT, second and third harmonics predominate initially. Ultimately, the even harmonics disappear with the decay of the offset direct-current component of the short-circuit current. Whether or not the odd harmonics disappear depends on the CT's steady-state saturation characteristic. CTs should be rated to avoid steady-state saturation.

5.4.2 External faults

Transformers can be connected to buses in such ways that either the CTs used for the differential will be in series with the transformer windings or they will be in breakers that are part of the bus, such as a ring bus or breaker-and-a-half scheme. For the CTs with primaries in series with the transformer winding, the CT primary current for through-faults will be limited by the transformer impedance. When the CTs are part of the bus scheme, as mentioned above for ring buses or breaker-and-a-half schemes, the CT primary current is not limited by the transformer impedance. In fact, high primary currents may be experienced. In either case, any deficiency of CT output caused by saturation of one CT that is not matched by a similar deficiency of another CT will cause a difference current to appear in the operating circuit of a differential relay. See IEEE Committee Report [B8]. Time overcurrent relays, without restraint, can overcome this problem only by having their pickup and time dial settings made sufficiently high, to override this false differential current. Percentage differential relays offer the advantage of faster speed and security with reasonable sensitivity. Ideally they should be applied with a restraint element in each CT circuit. Also, the burden of each CT secondary circuit must not be too high to avoid a ratio error exceeding that recommended by the relay manufacturer (see IEEE Std C37.110-1996).

5.4.3 CT connections

CT performance is a function of the secondary burden. The method of connecting the CTs and the relay burden will determine the total effective burden. Also, the physical and electrical locations of auxiliary CTs can similarly affect the effective burden. For more information on the effect of CT connections, see IEEE Std C37.110-1996

First, the relay's capabilities must be evaluated. Some *differential* relays can internally accommodate the phase shift of the transformer, allowing the engineer to choose CT connections at the transformer that suit other schemes connected to the same CTs. Many relays do not have this versatility, and therefore, the CTs must be connected to create the same phase shift as the primary transformer windings.

For example, a transformer using both Δ and Y connections creates a 30˚ phase shift between the respective terminals of the transformer. By connecting the CTs in Δ on the Y side of the transformer and the CTs in Y on the Δ side of the transformer, the 30˚ phase shift can be matched between the transformer and the CT currents. Therefore, the relay does not see any phase shift at its input terminals.

Second, Δ-Y transformers are a source of ground fault current. The zero sequence current on the grounded Y side is not reflected in the terminals on the Δ side. Some relays can ignore this contribution as part of the above internal phase shift accommodation. Again, many other relays can not accommodate this function and

--`,,`-`-`,,`,,`,`,,`---
Copyright © 2000 IEEE. All rights reserved.

Copyright The Institute of Electrical and Electronics Engineers, Inc.
Provided by IHS under license with IEEE
No reproduction or networking permitted without license from IHS
Not for Resale

must use the CTs to filter out the apparent ground current contribution. As for the above example, the Δ CT connection on the Y side of the transformer traps the zero sequence current from the CT secondaries and prevents the differential relay from seeing the mismatch current.

5.5 Reasons for mismatch current

There are non-fault-related currents or factors that may require compensation to prevent undesirable relay operation. The following subclauses include a discussion of some of those situations.

5.5.1 Unbalance caused by CT ratios

Even if a transformer has a fixed ratio, it is frequently difficult to match CT ratios exactly on the two (or more) sides of a transformer. CT mismatch causes current flow in the operating circuit of the differential relay. If the transformer has a load tap changer, the possible mismatch is increased further. During a through-fault condition, the differential operating current due to mismatch can approach the current rating of the transformer.

5.5.2 Magnetizing current inrush

This is a phenomenon that causes the violation of the basic principle of differential relaying since the magnetizing branch of the transformer can have a very low impedance without a transformer fault. Current produced by magnetizing inrush can reach many times the transformer rating, and these currents appear in the differential relay. The inrush current duration can range from a few cycles up to many seconds. See [B23] and [B17] for an explanation of this mechanism.

Although usually considered only in conjunction with the energizing of a transformer, magnetizing current inrush can be caused by any abrupt change of magnetizing voltage. Such transients include the occurrence of a fault, the removal of a fault, the change of character of a fault (for example, the change from a single-phase-to-ground fault to a two-phase-to-ground fault), and out-of-phase synchronizing. Thus, a desensitizing scheme that is operative only when energizing a transformer may not be adequate.

There are several conditions that cause particularly severe magnetizing inrush phenomena [B23]. One involves the energizing of a transformer at a station at which at least one other transformer is already energized [B48]. The inrush phenomenon [B17] will involve transformers that are already energized as well as the transformer being energized. This inrush transient may be particularly long in duration. It is important to realize that the inrush into the transformer being energized occurs during the opposite half-cycle to that of the already energized transformer. Thus, the net inrush into all transformers may approximate a sine wave of fundamental frequency, and therefore not operate the harmonic restraint unit of a differential relay if it is protecting both parallel transformers. Another inrush phenomenon involves the energizing of a transformer by means of an air switch. Arcing of the switch can result in successive half-cycles of arc of the same polarity. Thus if the first half-cycle results in substantial residual magnetism in a transformer core, succeeding half-cycles can cause a cumulative increase in residual magnetism, each time resulting in a more severe inrush.

Two important characteristics of magnetizing inrush current are

a) It contains substantial harmonics, particularly the second harmonic. These harmonics are not always present in high quantities in all three phases (see 6.2.3.1).

b) That there is always a time during each cycle where the current magnitude is almost zero. This time is always greater than a quarter cycle. See Figure 1 for a plot of typical inrush current [B22].

The harmonic content of the inrush current depends on various factors such as remnant flux in the core, switching angle, and load on the transformer. Harmonic analysis of the inrush current during the events in

Copyright © 2000 IEEE. All rights reserved.
Copyright The Institute of Electrical and Electronics Engineers, Inc.
Provided by IHS under license with IEEE
No reproduction or networking permitted without license from IHS
Not for Resale

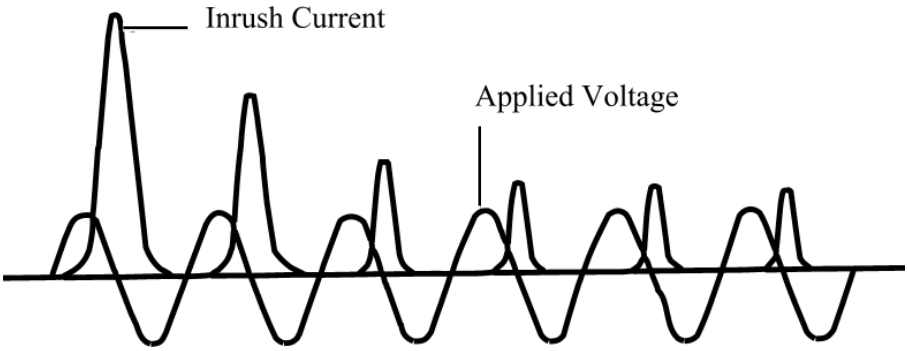

Figure 1—Typical magnetizing inrush current wave

Figure 1 shows that the second harmonic content of the inrush current is sensitive to all these conditions. The second harmonic content reduces appreciably with increasing load at lagging power factor conditions [B19].

5.5.3 Magnetizing current during overexcitation

Sudden loss of load can subject the generator step-up transformer to substantial overvoltage. This can also occur during start-up or shutdown of the generator if nominal voltage is maintained while the speed is below normal (an overexcitation condition). If saturation occurs, substantial exciting current will flow, which may overheat the core and damage the transformer severely. The waveform will be distorted and again the wave will have harmonic content and current zero periods. The extent of these effects will depend on the generator connections and the transformer design and connections. Relay current harmonic content will also be altered by Δ CT connections.

5.5.4 Phase-shifting transformers

A phase-shifting transformer, as its name implies, has a purposely introduced angular voltage difference, usually adjustable in steps, between the primary and secondary voltages. If the angular difference is fixed at 30°, as it is with the familiar Y-Δ transformer, CT connections for proper differential relaying are easy to obtain. However, if the phase angle shift is variable or some fixed angle other than 30°, then specific knowledge of the transformer design is necessary to develop a custom differential scheme for that transformer. Because of the variety of designs for phase-shifting transformers, the manufacturers of the transformer and of the protection scheme should be consulted for the best type and placement of CTs.

6.Electrical detection of faults

Fuses are commonly used to provide fault detection for transformers with minimum nameplate ratings up to 5000 kVA, three phase (Categories I and II). Transformers of 10 000 kVA and larger, three phase, minimum nameplate (Categories III and IV) are generally protected by a combination of protective devices, as shown in Figure 2. Transformers that fall between these two ratings are protected by either fuses or relays. The choice of protection depends on the criticality of the load, the relative size of the transformer compared to the total system load, and potential safety concerns. System considerations, such as coordinating fuses with upstream relays or with transformer damage curves, may determine what protection is used. Some other considerations include types of faults, personal safety issues, speed of clearing, single phasing of load, and ferroresonance. See Annex A for further definition of these categories.

Copyright © 2000 IEEE. All rights reserved.

Copyright The Institute of Electrical and Electronics Engineers, Inc.
Provided by IHS under license with IEEE
No reproduction or networking permitted without license from IHS
Not for Resale

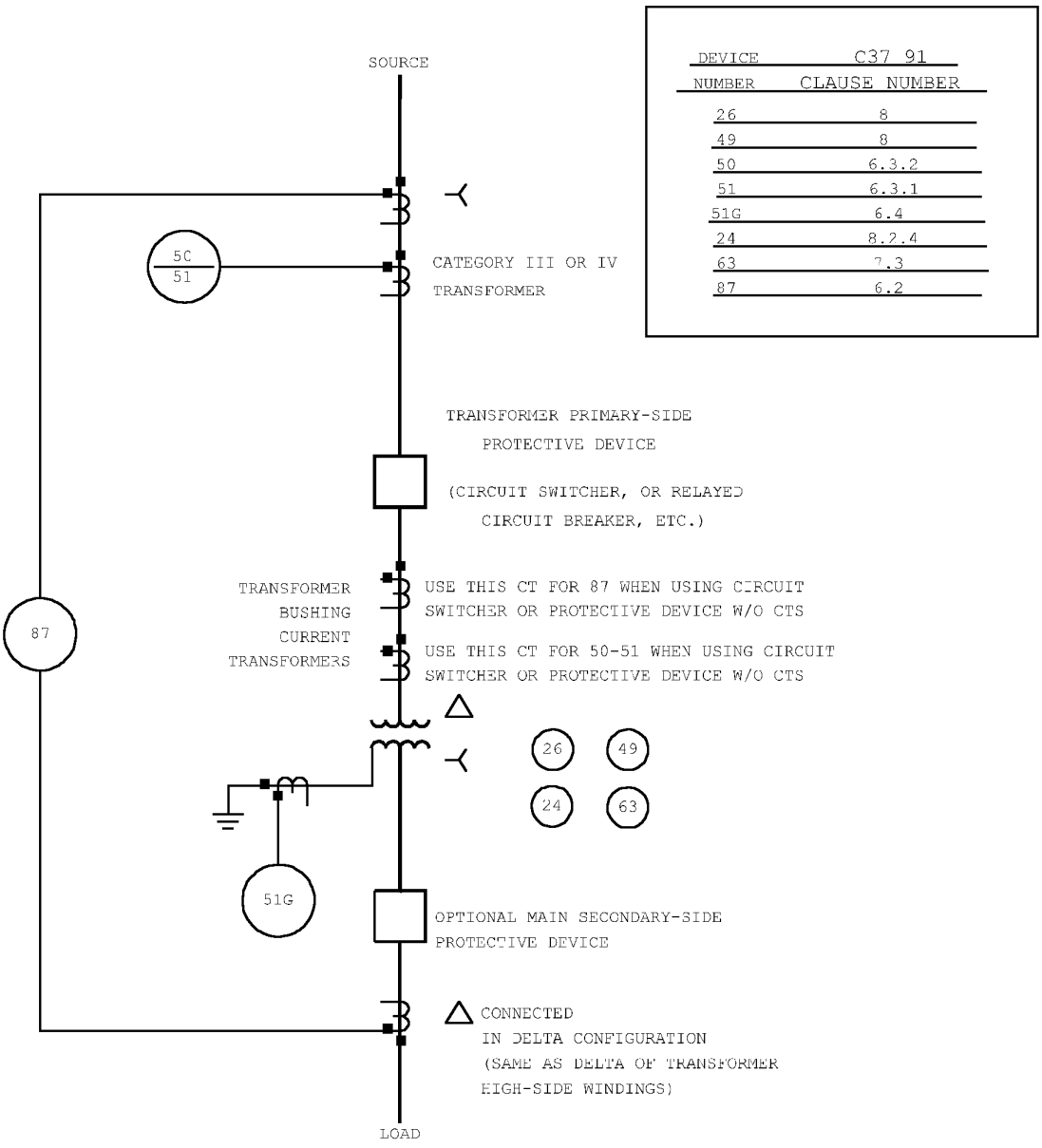

Figure 2—Protection for a Δ-Y transformer

6.1 Fuse protection

Fuses have the merits of being economical and requiring little maintenance. *Battery* supply and a relay building are not needed. Fuses can reliably protect some power transformers against damage from primary and secondary external faults. They will provide limited protection for internal faults. Generally, more sensitive means for protection from internal faults is provided for transformers of 10 MVA and higher. Fuses have been used at higher transformer ratings, depending on the currently available fuse ampere ratings. Primary fuses for power transformers are not applied for overload protection, their main purpose being fault protection (see 6.6.1). It should be recognized that the blowing of one fuse on a three-phase system will not necessarily deenergize the fault. If the fault is not deenergized, the resulting single-phase service may be

Copyright © 2000 IEEE. All rights reserved.
Copyright The Institute of Electrical and Electronics Engineers, Inc.
Provided by IHS under license with IEEE
No reproduction or networking permitted without license from IHS
Not for Resale

detrimental to the connected polyphase motors and other loads. If required, special protection should be added for single-phase conditions.

A typical transformer that exhibits this protection shortfall is a Δ primary, grounded T secondary distribution station transformer that is protected with fuses on the primary side. If a phase-to-phase-to-ground fault occurs on the secondary side between the transformer terminals and the low-side protective device, then the fault must be cleared by the high-side fuses. The fuse with the highest current will operate first, leaving the transformer energized through the remaining two fuses. At this point the secondary fault is further limited by twice the transformer impedance and, depending on the fuse size, transformer impedance, and system impedance, the remaining fuses may or may not operate. This condition could overload the transformer but severely overloads the neutral connection because the currents in the secondary windings are in phase and sum algebraically in the neutral connection. Table 2 shows the magnitude of currents for a typical 69–13.2 kV, 8.4 MVA distribution transformer before and after the first fuse clears. This transformer would normally be protected by a 100E fuse. The table clearly shows that the current in the neutral connection remains essentially the same after the first fuse opens and will persist until the second fuse opens.

Table 2—Currents for a typical distribution transformer

Phase B-C-ground fault before first fuse opens				Phase B-C-ground fault after first fuse opens			
High-side phase current (A)		Low-side phase current (A)		High-side phase current (A)		Low-side phase current (A)	
∅A	415	∅A	0	∅A	226	∅A	0
∅B	415	∅B	3764	∅B	226	∅B	2050
∅C	697	∅C	3764	∅C	0	∅C	2050
—		Neut.	4100	—		Neut.	4100

NOTE—∅ = Phase

The selection of the fuse and proper ampere rating should be based on the following factors:

a) Fuse fault-interrupting capability and available system fault current
b) Maximum anticipated peak load current, daily peak loads, emergency peak loads, maximum permissible transformer load current, and the applicable transformer through-fault current duration curve (see Annex A)
c) Hot load pickup (inrush current on instantaneous reclosing of source-side circuit breaker) and cold load pickup (inrush current and undiversified load current after an extended outage)
d) Available primary system fault current and transformer impedance
e) Coordination with source-side protection equipment
f) Coordination with low-side protection equipment
g) Maximum allowable fault time on the low-side bus conductors
h) Transformer connections and grounding impedance as they affect the primary current for various types of secondary faults
i) Sensitivity for high-impedance faults
j) Transformer magnetizing inrush

Copyright © 2000 IEEE. All rights reserved.

Copyright The Institute of Electrical and Electronics Engineers, Inc.
Provided by IHS under license with IEEE
No reproduction or networking permitted without license from IHS
Not for Resale

Ampere rating selection is facilitated by data published by fuse manufacturers. Such data include time-current characteristic curves, ambient temperature, and preloading adjustment curves, plus daily and emergency peak-loading tables. Coordination examples are included in Annex A.

6.2 Differential protection

Current differential relaying is the most commonly used type of protection for transformers of approximately 10 MVA three-phase (self-cooled rating) and above (IEEE Committee Report [B49]). The term refers to the connection of CTs so that the net operating current to the relay is the difference between input and output currents to the zone of protection. Relays of three general classes are used with this current differential. They are

a) Time overcurrent relay, which may include an instantaneous trip unit having a high-current setting

b) Percentage differential with restraint actuated by the input and output currents

c) Percentage differential relay, with restraint actuated by one or more harmonics in addition to the restraint actuated by the input and output currents

CT connections and ratios must be such that the net current in the relay operating coil or element for any type or location of external fault is effectively zero, unless relay current matching taps are available. Various types of CT connections are shown in Figure 3, Figure 4, and Figure 5. Paralleling of two or more CTs for connection to a single restraint coil or element usually should be avoided for the most effective restraint action.

If breaker CTs are used for input to the transformer differential, bypassing the breaker will affect the inputs for the differential relays. Assuming that the differential relay is removed from service and there are other relay schemes protecting the transformer, care must be taken to ensure that other breakers will trip in lieu of the bypassed breaker. If this alternative tripping is not available, the transformer breaker should not be bypassed.

6.2.1 Differential protection using time overcurrent relays

Overcurrent relays without restraint are seldom used because of their susceptibility to false operation from causes such as

a) Saturation errors or mismatch errors of CTs
b) Magnetizing inrush current when the transformer is energized

To compensate for the saturation/mismatch errors, the overcurrent relays must be set to operate above anticipated values. Time delay to override inrush is necessary to compensate for the magnetizing inrush current. Because of the possibility of power transformer saturation, caution is advised against the use of this relay where exposure to geomagnetic induced currents (GICs) is possible.

6.2.2 Differential protection using percentage differential relays

To overcome the drawbacks of applying simple overcurrent relays to differential protection, manufacturers developed percentage differential relays. These relays offer sensitive differential protection at low currents and tolerate larger mismatches at high currents, while still tripping for internal faults.

The basis of the percentage differential relay is the difference current (as measured at the ends of the protected zones), which must exceed a predetermined percentage of the through current before tripping can occur. The through-current is referred to as the restraint current. The percentage difference can be fixed or

Copyright © 2000 IEEE. All rights reserved.
Copyright The Institute of Electrical and Electronics Engineers, Inc.
Provided by IHS under license with IEEE
No reproduction or networking permitted without license from IHS Not for Resale

variable, depending on the relay's design. There is also a minimum differential current threshold before tripping, without regard to the restraint current.

The basic arrangement for percentage differential protection of a two-winding transformer is shown in Figure 3.

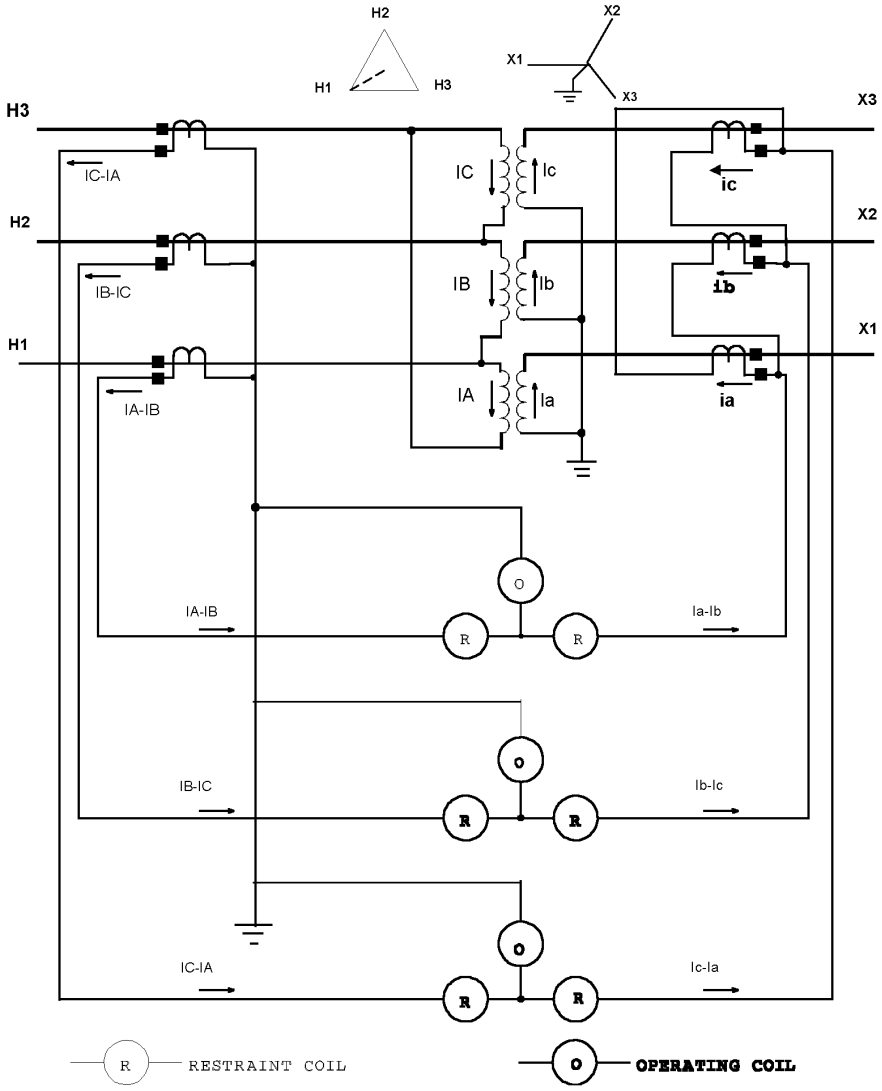

Figure 3—Typical schematic connections for percentage differential protection of a Δ-Y transformer

Details of minimum pickup, restraint current, and characteristic slope vary among manufacturers. Slope may not be a straight line, but may curve up depending on the design of the percentage restraint system. The curve allows even larger percentage mismatches, up to approximately 70%, during heavy through-currents.

High-voltage power transformers present several possibilities for current mismatch as seen by the differential relay. These mismatches, caused by different sources, can add to or offset each other, thus making the total mismatch hard to predict. Therefore, the percentage differential relay must be tolerant of the worst-case addition of the mismatch errors.

Copyright © 2000 IEEE. All rights reserved.

Copyright The Institute of Electrical and Electronics Engineers, Inc.
Provided by IHS under license with IEEE
No reproduction or networking permitted without license from IHS
Not for Resale

First, the ratio of the high-voltage transformation inherently mandates different currents at the primary and secondary terminals.

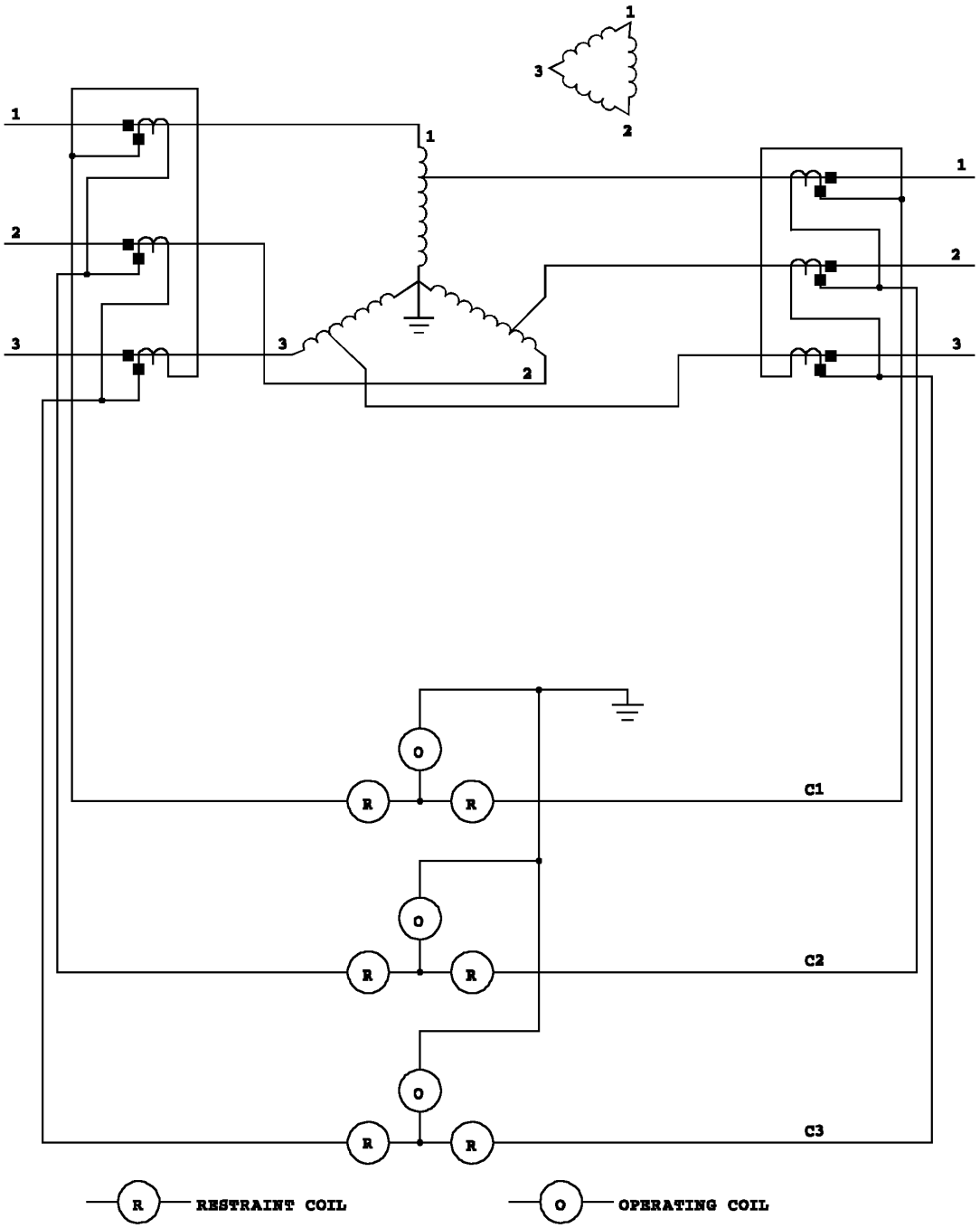

Figure 4—Typical schematic connections for percentage differential protection of a Y autotransformer with an unloaded tertiary

Copyright © 2000 IEEE. All rights reserved.
Copyright The Institute of Electrical and Electronics Engineers, Inc.
Provided by IHS under license with IEEE
No reproduction or networking permitted without license from IHS
Not for Resale

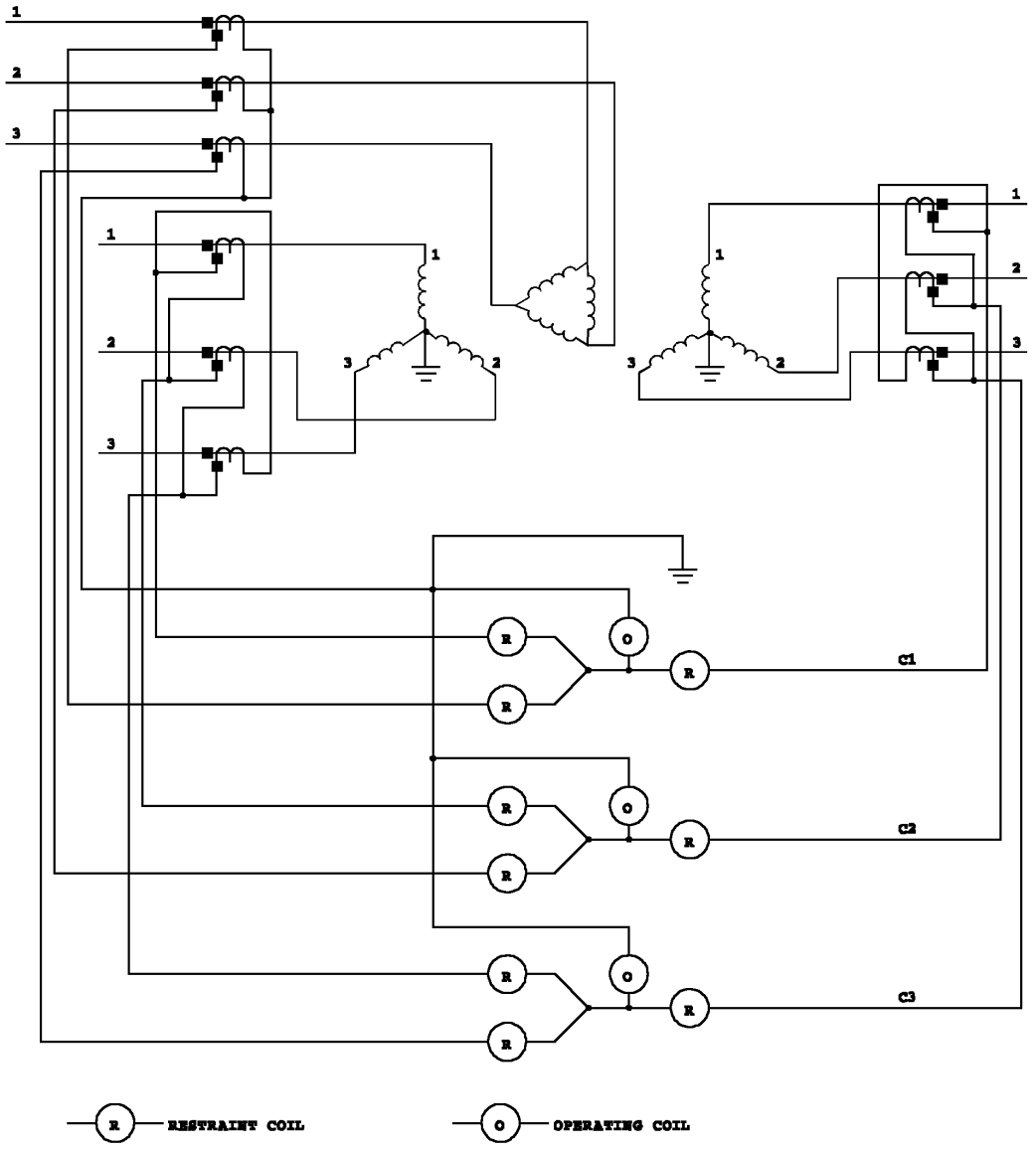

Figure 5—Typical schematic connections for percentage differential protection of Y-Δ-Y transformer with a loaded Δ tertiary

Depending on the transformer ratio, sometimes this difference is precisely compensated for by using offsetting ratio differences in the CT primary ratings. For example, a 138–69 kV transformer could use 600:5 CTs on the 138 kV side and 1200:5 CTs on the 69 kV side.

For Y-Δ transformer connections, the 30° phase shift can be compensated for by proper connection of the CT secondaries, but the current ratio difference is affected by the $\sqrt{3}$ multiplier for currents leaving the Δ CT secondary connection. Alternatives are available when it is not possible to match the high-voltage current ratio with a ratio of standard available CT primary current ratings. Some relays are built with internal current taps to compensate for current input ratio differences. Special-ratio auxiliary CTs are sometimes used to compensate for the ratio differences.

Copyright © 2000 IEEE. All rights reserved.

Copyright The Institute of Electrical and Electronics Engineers, Inc.
Provided by IHS under license with IEEE
No reproduction or networking permitted without license from IHS
Not for Resale

Second, a large contribution to current mismatch is the application of load tap changers (LTCs) for voltage regulation. A typical LTC range of ±10% in voltage creates a ±10% variation in current. This is a substantial mismatch for which the differential must not operate.

Last, a third contributor to current mismatch is the difference in performance of CTs applied to the different voltage terminals of the transformer. At low currents, such as for load, the errors are very small and insignificant compared to the CT ratio and LTC errors discussed above. For heavy faults just outside the differential zone, CT saturation is a likely possibility. The difference in performance between the CTs on different transformer terminals appears as difference current in the operate coil or element of the differential relay.

6.2.3 Differential protection using percentage differential relays with inrush restraint

The addition of some type of restraint that recognizes the characteristics of the inrush current provides greater sensitivity when a power transformer is energized.

6.2.3.1 Harmonic restraint

Harmonic restraint is used to avoid undesired tripping of the percentage differential relay by the inrush current when the transformer is energized. In addition, harmonic restraint allows more sensitive settings and greater speed. These relays utilize frequency-selective circuits responsive to at least the second harmonic current, which is present in all transformer energizing surges, to restrain or greatly reduce the sensitivity of the relay during the time the inrush current exists. Several designs utilize other harmonics in addition to the second harmonic to develop the restraint.

The purpose of all of these designs is to provide a relay that properly restrains regardless of the amount of inrush and yet permits relatively high-speed operation if an internal fault occurs during the inrush period. Another design objective is to not have excessive restraint resulting from the harmonic distortions of the CT secondary currents. This can happen as a result of CT saturation during a severe internal fault even when the presence of CT saturation causes the appearance of harmonics. To provide protection for this condition, frequently the differential harmonic restraint relay will also include an unrestrained instantaneous relay unit. The unrestrained instantaneous relay unit is set above possible transformer inrush current but below the current that might result in CT ac saturation. The usual factory setting is 8 to 10 times the tap value. Refer to IEEE Std C37.110-1996 for considerations regarding ac and dc saturation of CTs.

Another consideration in the use of harmonic restraint relays is the performance during transformer overexcitation (see 5.5.3). Whether a differential relay will operate on exciting current due to overexcitation depends on the magnitude of exciting current, the harmonic content of the current (predominately odd harmonics), the shape of the waveform, and the restraint characteristic of the relay. A relay that restrains on odd harmonics (in addition to the second harmonic present during initial inrush) is less likely to operate under such conditions. On the other hand, rectifier transformers, where relatively high levels of odd harmonics are normally present, would be better protected by the harmonic restraint relays using only the second harmonic. The relay application engineer should check the Bibliography, Annex B, for assistance in defining specific transformer protection objectives and hence the preferred type of harmonic restraint relay characteristic.

Harmonic restraint differential relays often can be justified by considering the following points:

a) Fewer false trips due to inrush
b) Faster operating time (0.01–0.05 s versus 0.1–0.2 s for the percentage restraint type)
c) Lower pickup (10–50% of transformer rating versus 40–100% for the percentage restraint type)

Occasional false trips by harmonic restraint differential relays have been observed when transformers with connected transmission lines were energized. Analysis of magnetizing inrush current waveforms for this configuration showed noticeable reduction in harmonic content compared to energizing the transformer

Copyright © 2000 IEEE. All rights reserved.
Copyright The Institute of Electrical and Electronics Engineers, Inc.
Provided by IHS under license with IEEE
No reproduction or networking permitted without license from IHS
Not for Resale

isolated from the line. The same point-on-wave closing signal was used for proper comparison. It was concluded that insufficient inrush harmonic content for this configuration was the cause of false trips. The relays sensitivity to harmonics was increased.

Harmonic restraint relays can be improved by using time-limited cross-blocking. In cross-blocking, one phase with sufficient harmonics can restrain the whole unit; sufficient harmonics in all three phases are not required. This feature can be limited to inrush current by using a time limitation, since harmonic restraint can cause trip delays on internal faults with CT saturation.

6.2.3.2 Inrush restraint using the zero-current time period of the current waveform

Another type of relay uses the period of the inrush waveform when the current magnitude is equal to the normal magnetizing current to identify the inrush condition. These relays also use an instantaneous element that is set to about 4 times rated current. Because the instantaneous element detects both the polarity and the magnitude of each loop of the inrush waveform, no operation occurs when the inrush is of a unidirectional nature (magnitude of up to 15 times rated current) or of the bidirectional nature (up to 3.5 times the rated current).

6.2.4 Unit generator transformer sets

On cross-compound generators, the fields may be applied while the generators are on turning gear, or at speeds of 15–35% of synchronous speed, depending on the design and users' preferences. Application of the fields to such machines normally excites the generator step-up and unit station service transformers and the generator, therefore, protection is required for all of the unit system. The filter circuit of some harmonic restraint relays may block relay operation if a fault occurs before the machine is up to synchronous speed. Since relay designs vary, the relay performance at reduced frequency should be checked. Unit voltage per unit frequency (V/Hz) relaying may be required to protect the transformer from damage due to overexcitation (see 8.2.4 for further details).

6.2.5 Generator station service

Where a start-up or station service transformer is connected to the high-voltage bus, high-speed fault clearing is usually required for stability reasons, even though the transformer is relatively small. The low CT ratio required for satisfactory sensitivity may result in severe CT saturation for high-side faults. If the burden is high, the high peak voltages could result in insulation breakdown and, hence, failure of the differential to operate. An additional CT with a high ratio, supplying an overcurrent relay with instantaneous unit would then be required to back up the differential. If high sensitivity is not required, the differential relay may be omitted.

When a unit auxiliary transformer is connected at a point between the generator and step-up transformer, a CT connection should be provided for the overall differential scheme. A connection from the overall differential to the low-side CTs of the unit auxiliary transformer avoids the saturation problem that may occur with high-side CTs. This saturation problem could prevent the operation of the unit auxiliary transformer differential relays. The overall differential thus connected provides protection for the unit auxiliary transformer and the generator and the step-up transformer. It should be noted, however, that the relay sensitivity for the unit auxiliary transformer faults may be low because of the high CT ratios. If additional sensitivity is desired, time and instantaneous overcurrent relays are utilized on the high side of the auxiliary transformer.

6.2.6 Multiple-winding transformer differential

Differential relays for transformers with three or more windings are available in the percentage differential and harmonic restraint relay types. Multiple-winding transformers frequently have different capacity ratings on the individual windings. For example, a three-winding transformer may have a high-side rating of 90 MVA, with the other two windings each rated at 50 MVA. The sum of the small windings' ratings can be

Copyright © 2000 IEEE. All rights reserved.

Copyright The Institute of Electrical and Electronics Engineers, Inc.
Provided by IHS under license with IEEE
No reproduction or networking permitted without license from IHS
Not for Resale

greater than the main (input) winding rating. Care should be taken in selecting CT ratios and selecting differential relay current balancing taps. These should be based on the through-flow of current equivalent to the largest winding rating regardless of the rating of the other winding considered. Proper restraint tap selection may be accomplished if through-load current involving only the high side and one other winding is studied at a time.

6.2.7 Parallel transformers

A major disadvantage of using one differential relay to protect two transformers is the reduction in sensitivity. The CT ratios are selected on the basis of total kilovoltamperes (kVA), and hence, the sensitivity for each transformer is less than one-half what it would be if individual protection were provided. When a transformer is energized in parallel with an already-energized transformer (see 5.5.2), the harmonic restraint unit on a differential relay protecting both transformers may not restrain. Thus, an undesired trip may occur. Therefore, each transformer should be protected by separate sets of differential relays.

6.2.8 Effect of overexcitation on differential relays

Overexcitation of a transformer could cause unnecessary operation of transformer differential relays. This situation may occur in generating plants when a unit-connected generator is separated (tripped) while exporting VARs. The resulting sudden voltage rise impressed on the unit transformer windings from the loss of VAR load can cause a higher than nominal volts per hertz condition and, therefore, an overexcitation event. This could also occur in transmission systems where large reactive load is tripped from a transformer with the primary winding remaining energized.

When the primary winding of a transformer is overexcited and driven into saturation, more power appears to be flowing into the primary of the transformer than is flowing out of the secondary. A differential relay, with its inputs supplied by properly selected CTs to accommodate ratio and phase shift, will perceive this as a current differential between the primary and secondary windings and, therefore, will operate. This would be an undesirable operation, as no internal fault would exist, with the current imbalance being created from the overexcitation condition.

Three methods have been applied to prevent false transformer differential operations when overexcitation occurs. These methods would be in addition to the second harmonic or gap detection principle used for inrush detection and restraint (described in 5.5.2).

a) Use a V/Hz relay to block the tripping of the differential relay, or to desensitize the differential relay when V/Hz reaches a certain level.

b) Since overexcitation manifests itself with the production of odd harmonics, and since the third harmonic (and other triplens) may be effectively cancelled in Δ transformer windings, use the level of fifth harmonic as a restraining quantity in the differential relay.

c) Use a modified differential scheme that extracts and uses the third harmonic exciting current from the transformer Δ winding to restrain the differential relay (described in 12.1).

6.2.9 Differential protection of autotransformers using high-impedance relays

Some utilities provide protection for large high-voltage and extra-high-voltage autotransformers by using voltage-operated bus-type high-impedance differential relays. Typical connections of this protective system for autotransformers, with the neutral point of the wye winding solidly grounded, are shown in Figure 6. This arrangement provides protection for all types of phase faults and ground faults, but not turn-to-turn faults. In this application, three sets of three-phase CTs are required, one set on the high-voltage side, another set on the low-voltage side, and the third set in the neutral ends of the winding. All CTs should have the same turns ratio and should be reasonably matched in accuracy class. A single high-impedance relay connected in a ground differential scheme is also applicable for autotransformer protection.

Copyright © 2000 IEEE. All rights reserved.

Copyright The Institute of Electrical and Electronics Engineers, Inc.
Provided by IHS under license with IEEE
No reproduction or networking permitted without license from IHS
Not for Resale

This protection is immune to the effects of magnetizing inrush current because inrush current is cancelled by the neutral CTs. Also, there is no imbalance current in the relay circuit due to the load tap changing equipment. Thus a high-impedance differential relay can be applied without any harmonic restraint, load bias, or time delay.

Autotransformers are often provided with a Δ tertiary winding. It should be noted that with this type of scheme no protection is afforded for faults occurring in the Δ tertiary winding. Where the terminals for this winding are not brought out to supply load, one corner of the Δ can be connected between the end of one phase of the main winding and its neutral CT. This connection is shown in Figure 6. In such an arrangement, the tertiary winding is included in the differential protection zone, and the relay would sense ground faults in the tertiary winding. This scheme does not provide protection for phase faults or turn-to-turn faults in the tertiary winding.

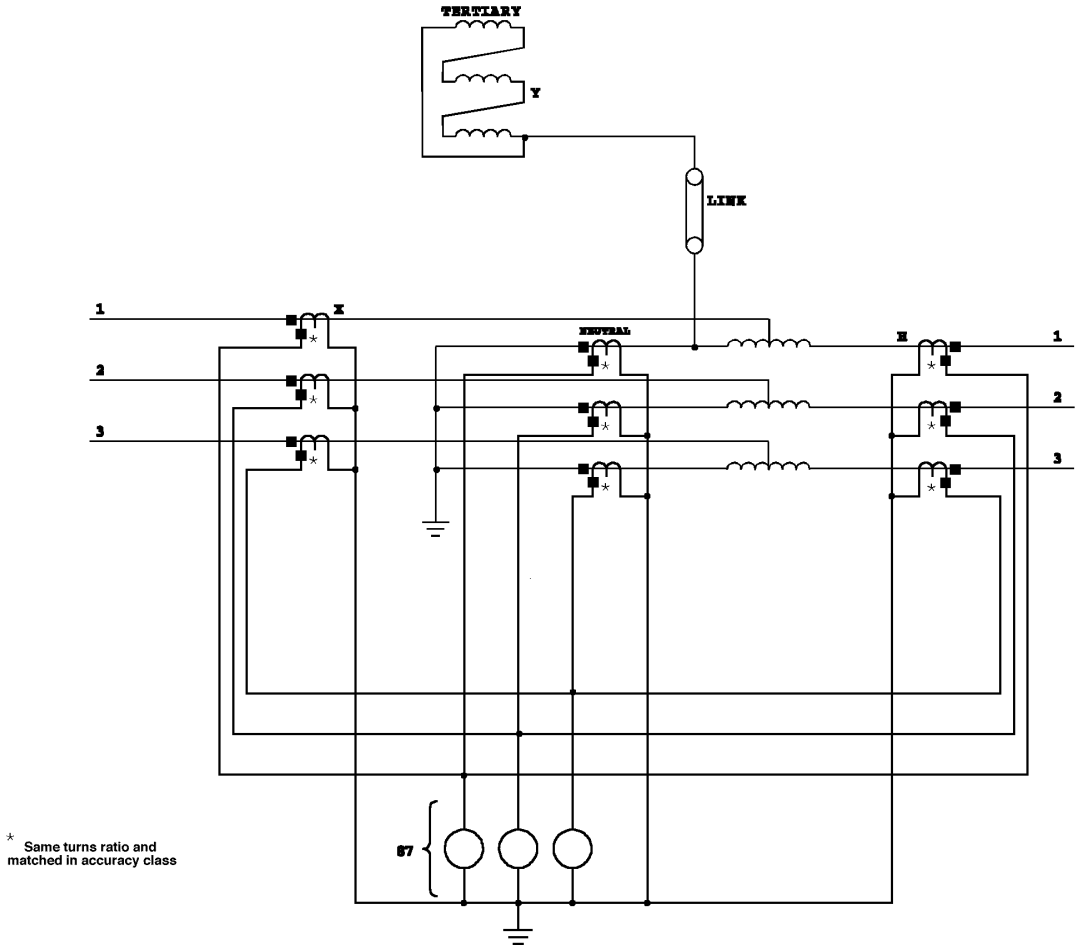

Figure 6—Typical schematic connections for high-impedance differential protection of a Y autotransformer with unloaded tertiary

Where the tertiary winding is used to supply load, the Δ winding corner connection cannot be used. Hence, separate protection is required. The tertiary winding overcurrent protection is described in 6.3.3.

6.2.10 CT requirements

The CT ratios and relay matching taps should be selected to minimize the unbalance current at the center of any applicable tap changer range. These should also be selected to avoid CT saturation during a maximum

Copyright © 2000 IEEE. All rights reserved.

Copyright The Institute of Electrical and Electronics Engineers, Inc.
Provided by IHS under license with IEEE
No reproduction or networking permitted without license from IHS
Not for Resale

symmetrical through-fault (see IEEE Std C37.110-1996). If saturation will occur, burdens and CT capability should be matched so that both CTs begin to saturate at about the same fault level. CT capability is increased and cable burden reduced by using the highest CT ratio compatible with relay taps. Cable burdens may be further reduced by using larger conductor or two conductors per phase.

6.3 Overcurrent relay protection

A fault external to a transformer can result in damage to the transformer. If the fault is not cleared promptly, the resulting overload on the transformer can cause severe overheating and failure. Overcurrent relays (or fuses, see 6.1) may be used to clear the transformer from the faulted bus or line before the transformer is damaged. On some small transformers, overcurrent relays may also protect for internal transformer faults, and on larger transformers, overcurrent relays may be used to provide relay backup for differential or pressure relays. Thermal relays (Clause 8) may also be used to protect transformers from harmful overload. However, thermal relays often are used for alarm only. Coordination examples are included in Annex A.

6.3.1 Phase time overcurrent

Time overcurrent relays are inexpensive, simple, and reliable protective devices. Since sensitive settings and fast operation are usually not possible with overcurrent relays, they will provide limited protection for internal transformer faults. Since the pickup value of phase overcurrent relays must be high enough to take advantage of the overload capabilities of the transformer and be capable of withstanding energizing inrush currents, insensitive settings result. Fast operation is not possible, since the transformer relays should coordinate with load-side protection, including dealing with reclosing cycles and service restoration inrush. Where time overcurrent relays are used for primary transformer protection, extensive damage to the transformer from an internal fault may occur.

Settings of phase overcurrent relays on transformers involve a compromise between the requirements of operation and protection. The pickup setting should be high enough to permit overloading the transformer when necessary, but the higher the setting, the less the protection. A setting of 125–150% of maximum kVA nameplate rating of a transformer is common, although higher values are sometimes used. On multiple-rated transformers, a higher setting may be necessary so as to utilize the full capability of the transformer at the higher forced-cooling rating.

If overcurrent protection (relays or fuses) is applied only to the high-voltage (Δ) side of a Δ–Y grounded transformer, it can have a problem providing sensitive fault protection for the transformer and still coordinating with low-side protective devices. For low-voltage (Y side) phase-to-phase faults, the high-side line current will be 115% of the low-voltage per unit fault current. For low-voltage (Y side) phase-to-ground faults, the high-side line current will be only 58% of the low voltage per unit fault current (see Figure 7, Figure A6, Figure A7, and Figure A8 in Annex A). When the Y is grounded through a resistor, the high-side fault current may be less than the maximum transformer load current. Similar concerns are applicable when the Y is grounded through a reactor.

The time setting should coordinate with relays on downstream equipment. Transformers are mechanically and thermally limited in their ability to withstand short-circuit current for finite periods of time. For proper backup protection, the relays should operate before the transformer is damaged by an external fault. (Refer to Annex A for the transformer through-fault current duration limits and relay setting examples.) Solid-state or microprocessor-based relays with special features such as fast reset should be evaluated for coordination with downstream devices.

In setting transformer overcurrent relays, the short-time overload capability of the transformer in question should not be exceeded. Low values of 3.5 or less times normal base current may result from overloading rather than faults. For such cases see IEEE C57.91-1995, since allowable time duration may be different

Copyright © 2000 IEEE. All rights reserved.
Copyright The Institute of Electrical and Electronics Engineers, Inc.
Provided by IHS under license with IEEE
No reproduction or networking permitted without license from IHS
Not for Resale

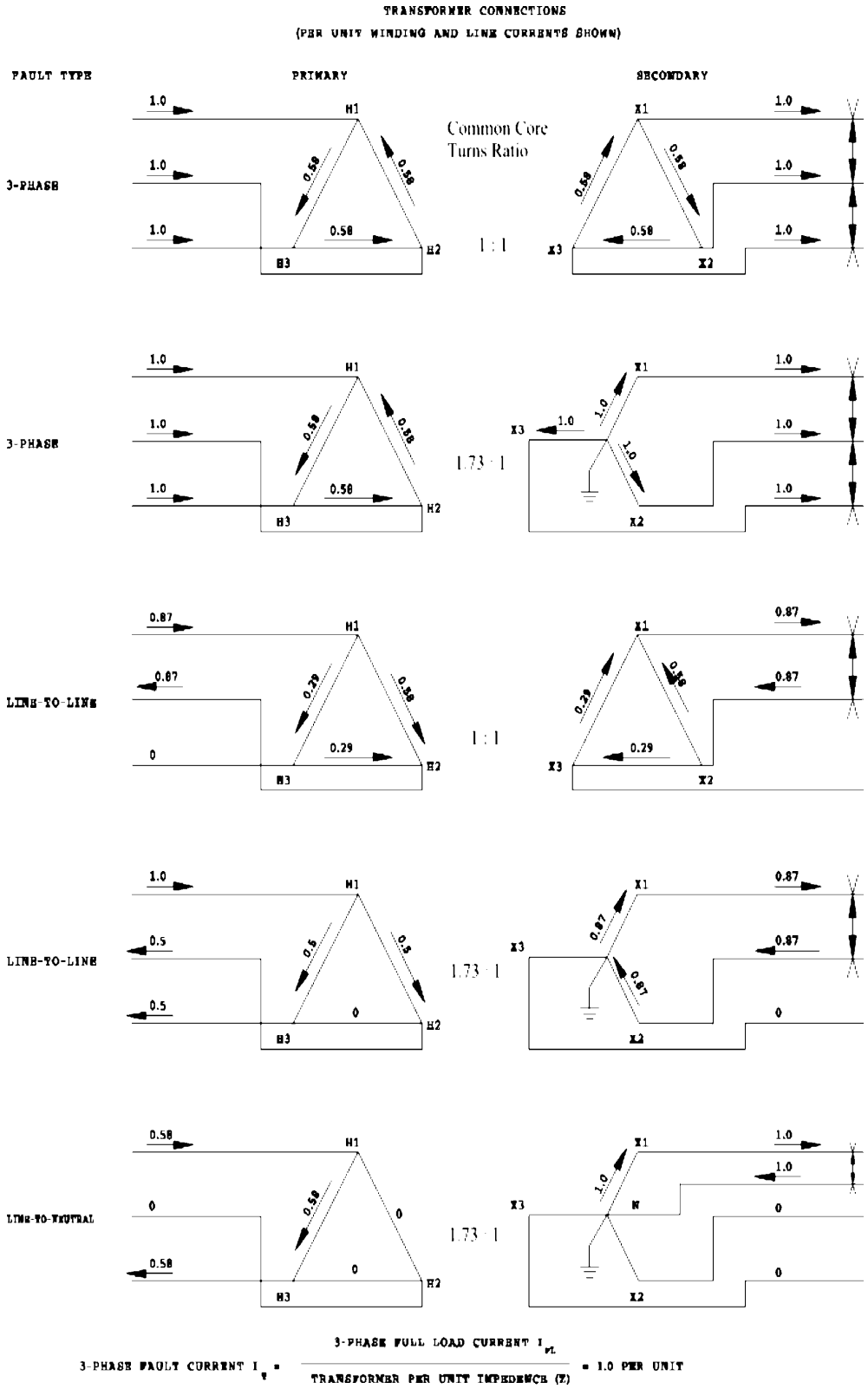

Figure 7—Line and transformer winding currents for Δ-Δ and Δ-Y connected transformers

Copyright © 2000 IEEE. All rights reserved.

Copyright The Institute of Electrical and Electronics Engineers, Inc.
Provided by IHS under license with IEEE
No reproduction or networking permitted without license from IHS
Not for Resale

from those in the through-fault current duration curves. Pending establishment of additional transformer standards, it is recommended that the manufacturer be consulted for the capability of a specific transformer.

Distribution supply transformers are subject to many through-faults and autoreclosing into line faults. The use of extremely inverse tripping characteristics for distribution circuit reclosers permits fast clearing of the more severe faults. Where the use of instantaneous relaying for either transformer or distribution feeder protection is limited, time overcurrent relays with very inverse time characteristics will provide fast clearing for the more severe faults.

6.3.2 Phase instantaneous overcurrent

Fast clearing of severe internal faults may be obtained through the use of instantaneous overcurrent units. When used, instantaneous overcurrent units should be set to pick up at a value higher than the maximum asymmetrical through-fault current. This is usually the fault current through the transformer for a low-side three-phase fault. For instantaneous units subject to transient overreach, a pickup of 175% (variations in settings of 125–200% are common) of the calculated maximum low-side three-phase symmetrical fault current generally provides sufficient margin to avoid false tripping for a low-side bus fault, while still providing protection for severe internal faults. For instantaneous units with negligible transient overreach, a lesser margin can be used. The settings in either case should also be above the transformer inrush current to prevent nuisance tripping. In some cases, instantaneous trip relays cannot be used because the necessary settings are greater than the available fault currents. In these cases, a harmonic restraint instantaneous relay may be considered to provide the desired protection.

6.3.3 Tertiary-winding overcurrent

The tertiary winding of an autotransformer, or three-winding transformer, is usually of much smaller kVA rating than the main windings. Therefore, fuses or overcurrent relays set to protect the main windings offer almost no protection to tertiaries. During external system ground faults, tertiary windings may carry very heavy currents. Hence, to guard against failure of the primary protection for external ground faults, separate tertiary overcurrent protection may be desirable.

The method selected for protecting the tertiary generally depends on whether or not the tertiary is used to carry load. If the tertiary does not carry load, protection can be provided by a single overcurrent relay connected to a CT in series with one winding of the Δ. This relay will sense system grounds as well as phase faults in the tertiary or in its leads.

When tertiary windings are connected by cables, the overcurrent protection provided to the tertiary winding should account for the thermal withstand of the cables. Alarming and tripping as a result of a prolonged unbalance condition or load tap changer malfunction should prevent damage to cables.

If the tertiary is used to carry load, partial protection can be provided by a single overcurrent relay supplied by three CTs, one in each winding of the Δ and connected in parallel to the relay. This connection provides only zero sequence overload protection and does not protect for positive and negative sequence overload current. In this case, the relay will operate for system ground but will not operate for phase faults in the tertiary or its leads. Where deemed necessary, separate relaying such as differential type should be provided for protection for phase faults in the tertiary or its leads.

The setting of the tertiary overcurrent relay can normally be based on considerations similar to those in 6.3.1. However, if the tertiary does not carry load, or if load is to be carried and the three CT, zero sequence connection is used, the associated overcurrent relay can be set below the rating of the tertiary winding. This relay should still be set to coordinate with other system relays.

Copyright © 2000 IEEE. All rights reserved.

Copyright The Institute of Electrical and Electronics Engineers, Inc.
Provided by IHS under license with IEEE
No reproduction or networking permitted without license from IHS
Not for Resale

6.4 Ground fault protection

Sensitive detection of ground faults can be obtained by differential relays or by overcurrent relays specifically applied for that purpose. Several schemes are practical, depending on transformer connections, availability of CTs, zero sequence current source, and system design and operating practices.

6.4.1 Faults in Δ-connected transformer windings

A residual relay, device 51N, as shown in Figure 8 and Figure 9, will detect ground faults within the Δ winding of the transformer and in the phase conductors between the CTs and the winding, when an external source of zero sequence current is available. Instantaneous overcurrent relays may be used, but sensitive settings will probably result in incorrect operations from dissimilar CT saturation and magnetizing inrush. This can be avoided by using a short-time overcurrent relay with a sensitive setting. The scheme is particularly valuable in plants or systems where the transformers are remote from the circuit breakers. By using CTs at the circuit breaker, sensitive detection is obtained for cable, bus, Δ winding, and bushing faults. A single window or doughnut CT supplying an instantaneous relay (as commonly used in motor protection) is secure, but is limited to cases of low and medium voltages where all three conductors can be fitted through the CT window.

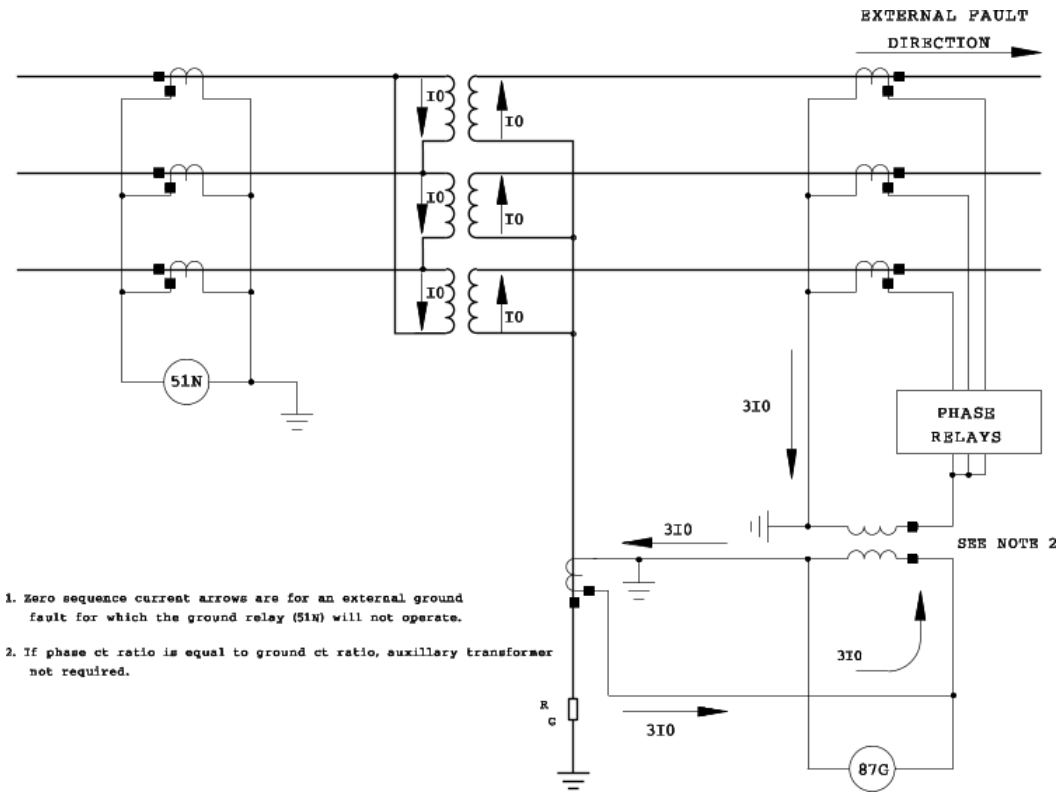

Figure 8—Complete ground fault protection of a Δ-Y transformer using a residual overcurrent and differentially connected ground relay

Copyright © 2000 IEEE. All rights reserved.

Copyright The Institute of Electrical and Electronics Engineers, Inc.
Provided by IHS under license with IEEE
No reproduction or networking permitted without license from IHS
Not for Resale

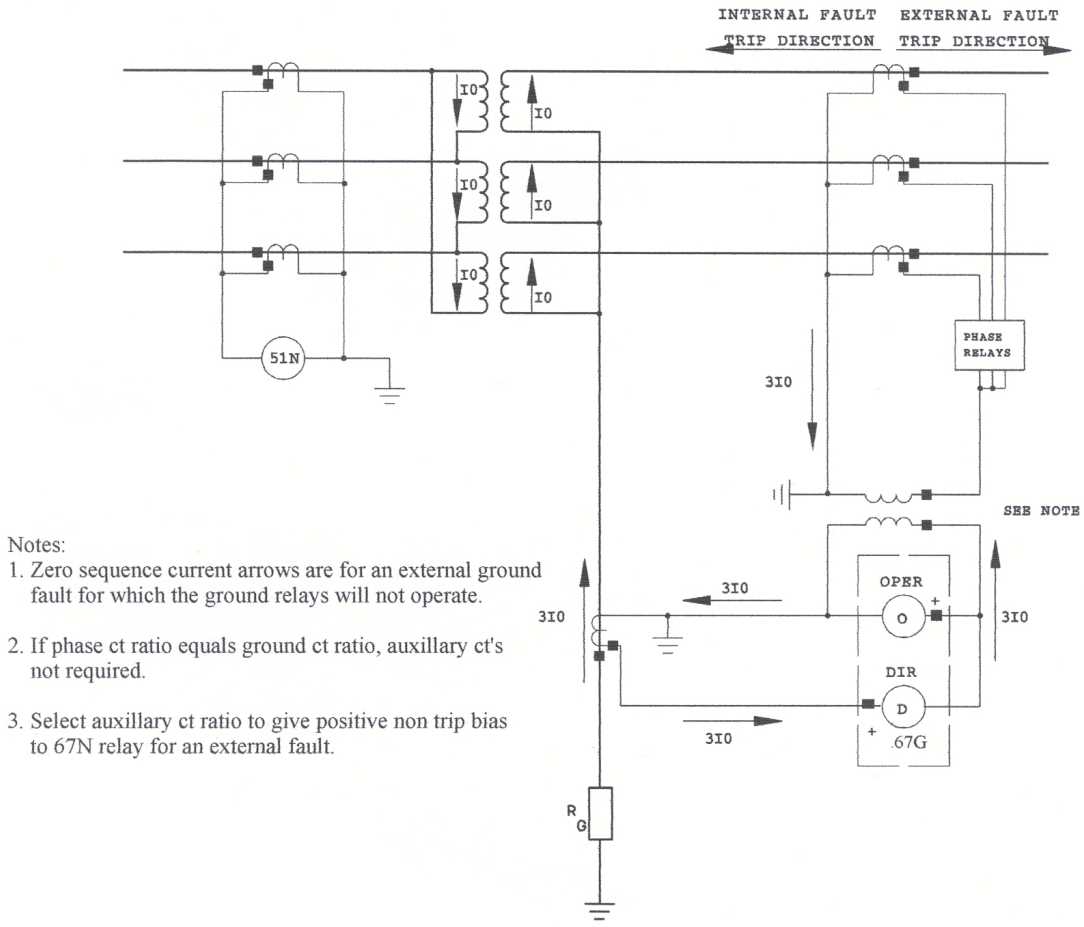

Figure 9—Complete ground fault protection of a Δ-Y transformer using a residual overcurrent and directional relay

6.4.2 Faults in grounded Y-connected transformer windings

To successfully detect faults in grounded Y-connected transformer windings, the relay system should discriminate between faults internal and external to the protected zone. The ground differential relay, device 87G in Figure 8, typically an overcurrent relay, or the directional ground relay, device 67G, connected as in Figure 9, is satisfactory. Both relay schemes will operate correctly for any internal ground faults with the circuit breaker in the circuit to the grounded Y winding open or closed. They will operate correctly with an external zero sequence current source, and they will not operate for external ground faults. The auxiliary CT is necessary if the phase and neutral CTs are of different ratio. Both schemes are particularly applicable where the ground fault current is limited and phase differential relays may not respond. The device 67G operating coil or element current is zero for an external fault with CT ratios matched. Therefore, it is wise to select the auxiliary CT ratio to give positive nontrip bias to device 67G for an external ground fault (auxiliary CT secondary current slightly greater than the transformer neutral CT secondary current).

Unequal CT action can produce residual error current during external phase faults. No transformer neutral current is produced and sensitive relays could misoperate.

Copyright © 2000 IEEE. All rights reserved.
Copyright The Institute of Electrical and Electronics Engineers, Inc.
Provided by IHS under license with IEEE
No reproduction or networking permitted without license from IHS
Not for Resale

6.4.3 Case ground

On a grounded neutral system, it is possible to isolate the transformer case from ground except for a single point. A CT and overcurrent relay at this grounding point would detect any internal ground fault or bushing flashover. Although effective, several problems are encountered. The system should be tested periodically to determine that no accidental grounds have been added. Incorrect operations can result from accidental grounds from power tools and transformer auxiliary equipment. Careful coordination between auxiliary equipment circuit breaker or fuse curves, arrester characteristics, and a time overcurrent trip relay can minimize this danger.

6.4.4 Impedance-grounded system

Transformer differential relays may not be sensitive enough to operate on ground faults where the transformer bank or system is grounded through an impedance. In these cases, it may be necessary to apply a sensitive time overcurrent relay in the transformer impedance-grounded neutral or a time overvoltage relay connected across the neutral impedance. These relays should be coordinated with any feeder and line protection relays that they may overlap. It is possible to provide high-speed protection and to avoid the need for coordination by using sensitive product-type relays, which are connected to trip only for ground in the protected zone. Figure 10 is a method used when there is no other possible ground source. An overcurrent relay connected to a neutral CT is torque-controlled by the blocking contacts of a plunger-type instantaneous relay in the neutral of the main breaker CTs. Since the transformer differential relays may not operate for such ground faults within the differential zone, these ground fault relays must trip the source-side circuit breakers.

6.4.5 Ground relays also used for sensitive ground fault protection

The primary advantage of ground relays over phase relays is their sensitivity. In systems where the ground fault current is purposely limited, their use may be vital. Ground relays can normally be applied with sensitivities of 10% or less of full load current. This compares very favorably with differential relays, whose pickup current may be from 20–60% of full load current under the most advantageous conditions. It is common practice in the United Kingdom and other countries influenced by the U.K. to protect all power transformers with the *restricted earth* relay. The term *restricted earth* is an expression referring to a sensitive ground relay system that is designed to detect ground faults within a well-defined protective zone (similar to that in Figure 8).

6.5 Fault detection for special-purpose transformers

6.5.1 Regulating transformers

The exciting winding of a regulating transformer presents a special protection problem, since ordinary power transformer differentials are not sensitive enough to sense faults in this high-impedance winding. Regulating transformers can be either the most common in-phase type employing only voltage regulation, or the phase-shifting type that provides regulation of phase angle, or both.

Sudden-pressure or fault-pressure relays will offer good protection for all three types. However, electrical protection may differ substantially between the in-phase type and the others. The tap changer mechanism compartment may be protected with gas or oil sudden-pressure relays. Pressure variations during normal tap changing arc interruption have not been found to cause false operation of the sudden-pressure relays. The use of vacuum interrupter switches in the tap changing mechanism eliminates any pressure variations in the tap changing compartment.

Copyright © 2000 IEEE. All rights reserved.

Copyright The Institute of Electrical and Electronics Engineers, Inc.
Provided by IHS under license with IEEE
No reproduction or networking permitted without license from IHS
Not for Resale

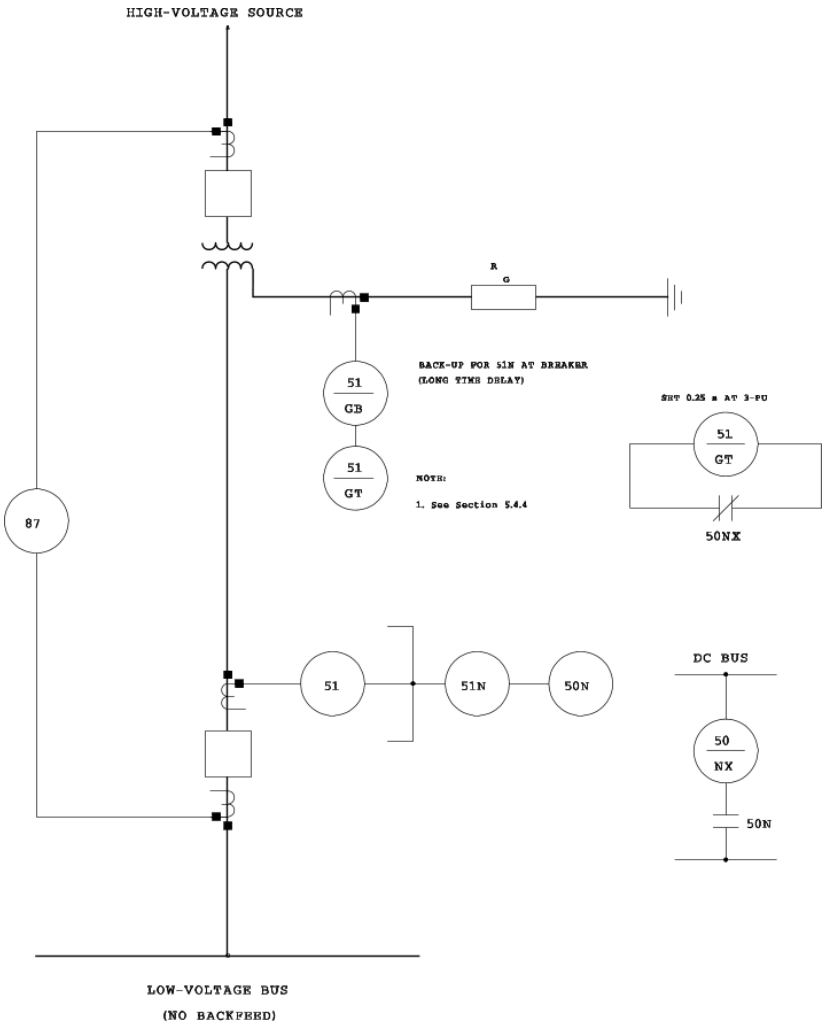

Figure 10—Sensitive high-speed ground fault protection with impedance grounding (alternative to Figure 8)

Transformer manufacturers usually provide special protection and monitoring schemes of their own design on regulating transformers. The scheme may stop the tap changing sequence or initiate a trip for a switch or mechanism malfunction.

6.5.1.1 In-phase type

Although overall differential relaying is usually provided for in-phase regulators, special-purpose relays are also available to protect the exciting winding more sensitively. On each phase, this type of relay compares the exciting winding current (obtained from a CT in the high-voltage lead or neutral end of the exciting winding) with one of the phase currents, as shown in Figure 11 (a).

The relay has one operating coil or element and one restraint coil or element and is generally set to operate for a current imbalance of 15% greater than the imbalance due to maximum regulation. It should be noted that the exciting winding of a ±10% regulator has a full load current rating only 10% of the rating of the series winding; CT ratios should be chosen with this in mind. The use of Δ–connected CTs is a necessary precaution to prevent tripping for external ground faults (if the neutral of the exciting winding is grounded). Because of the location of the CT in the exciting winding, the proper CT should be specified when the transformer is ordered.

Copyright © 2000 IEEE. All rights reserved.
Copyright The Institute of Electrical and Electronics Engineers, Inc.
Provided by IHS under license with IEEE
No reproduction or networking permitted without license from IHS
Not for Resale

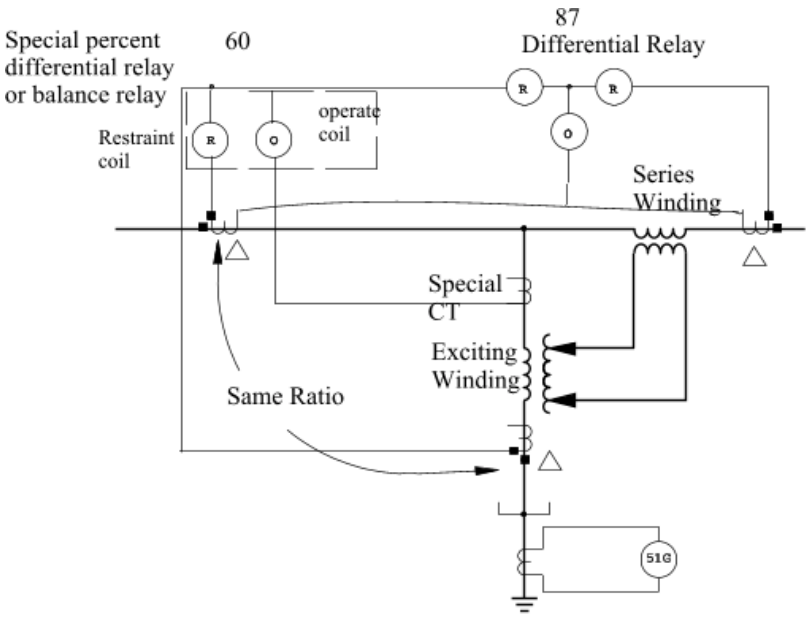

Selection of CT example: If main ct is 1500:5 Exciting winding ct is 150:5 for a +/- 10% 2500kVA 13.8kV regulator

(a)

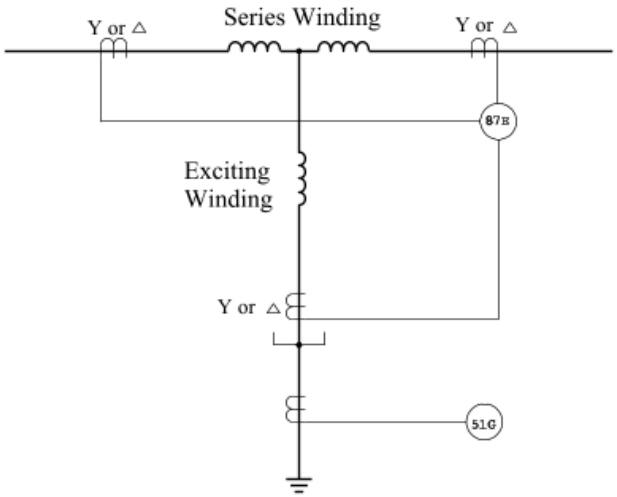

(b)

Figure 11—Protection for phase-shifting and regulating transformers: (a) protection for in-phase regulating transformers; (b) protection for phase-shifting transformers

6.5.1.2 Phase-shifting or combined phase-shifting and in-phase regulating transformers

For these types of transformers, neither type of protection shown in Figure 11 (a) is suitable. For example, for a quadrature phase-shifting transformer, the exciting winding in Figure 11 (a) might introduce a voltage not in the same phase, but rather in each of the other two phases. Conversely, the series winding in Figure 11 (a) would instead be two series windings deriving their voltages from the exciting winding of the other two phases.

Copyright © 2000 IEEE. All rights reserved.

Copyright The Institute of Electrical and Electronics Engineers, Inc.
Provided by IHS under license with IEEE
No reproduction or networking permitted without license from IHS
Not for Resale

The effects of these factors are as follows:

a) With respect to the normal percentage differential relay in Figure 11 (a), an external fault on either of the other two phases, or both, can produce current predominantly on only one side of the differential relay. This relay operates as though there were an internal fault if the fault current is above pickup.

b) With respect to the exciting winding protection of Figure 11 (a), an external fault on either one of the other two phases, or both, can cause the exciting (operating) current to be substantially equal to the line (restraining) current. The relay, connected as shown, would operate.

The relay protection of the phase-shifting transformer presents problems not common to a normal transformer. The primary winding, the series transformer, and the shunt transformer should all be considered in determining a viable relay protection scheme. Because of the large number of possible varieties of phase-shifting transformers, specific electrical protection of them is beyond the scope of this guide. It is pertinent, however, to point out that electrical protection will probably require CTs inside the transformer rather than the usual bushing CTs [see Figure 11 (b)]. Consequently, the protection must be decided on early enough that CTs can be specified before the transformer design is started. For protection of this type of transformer, the sudden-pressure or fault-pressure relay should be considered the first line of protection. See Ibrahim and Stacom [B31] and Plumptre [B32] for further information on phase-shifting transformer protection.

6.5.2 Combined power and regulating transformers

A power transformer, such as a Y-Δ transformer, may also have regulating features, either in-phase, out-of-phase (such as quadrature), or both. Such transformers are called tap-changing-under-load, or load-tap-changing, transformers.

The protection of a transformer of the in-phase variety has been previously covered in this guide. The electrical protection of the out-of-phase variety is even more difficult than the protection of the phase-shifting regulating transformer because the power transformer has no exciting winding, since excitation is obtained from loaded windings. The comments on phase-shifting regulating transformers apply equally well to this type of transformer (see 6.5.1.2). In any case, the sudden-pressure or fault-pressure relay should be considered the first line of protection.

6.5.3 Grounding transformers

A grounding transformer can be either a zigzag (z-z) or a Y-Δ-connected transformer. The electrical protection scheme is simple, consisting of overcurrent relays connected to Δ-connected CTs, as shown in Figure 12(a, Figure 12(b, and Figure 12(c.

If the grounding transformer is of the z-z variety, internal faults, such as turn-to-turn faults, may be limited by the magnetizing impedance of an unfaulted phase. Consequently, a sudden-pressure or fault-pressure relay should be considered to be the first line of protection, even though it may be marginal.

Grounding transformers are seldom switched by themselves. However, when they are switched, they are subject to magnetizing inrush current, like any other type of transformer. Harmonic restrained overcurrent relays may be used to prevent inadvertent tripping upon energizing.

A phase-to-ground fault should not be allowed to persist on a grounding transformer with a low or no neutral impedance that permits a fault current magnitude greater than the continuous current rating. Therefore, the selection of a CT ratio associated with the grounding transformer depends more on the pickup of the ground relay than the rating of the grounding transformer. However, if a fault is allowed to persist, then the CT ratio

Copyright © 2000 IEEE. All rights reserved.
Copyright The Institute of Electrical and Electronics Engineers, Inc.
Provided by IHS under license with IEEE
No reproduction or networking permitted without license from IHS
Not for Resale

must be selected with the continuous current in mind. A grounding transformer has a continuous rating based on a set fraction of its thermal current rating according to IEEE Std 32-1972.

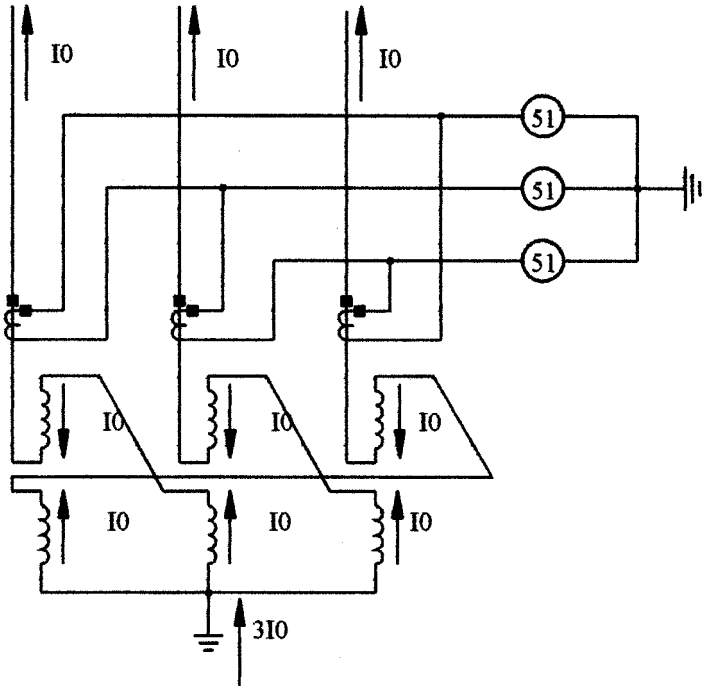

Figure 12(a)—Protection of grounding transformers: zigzag

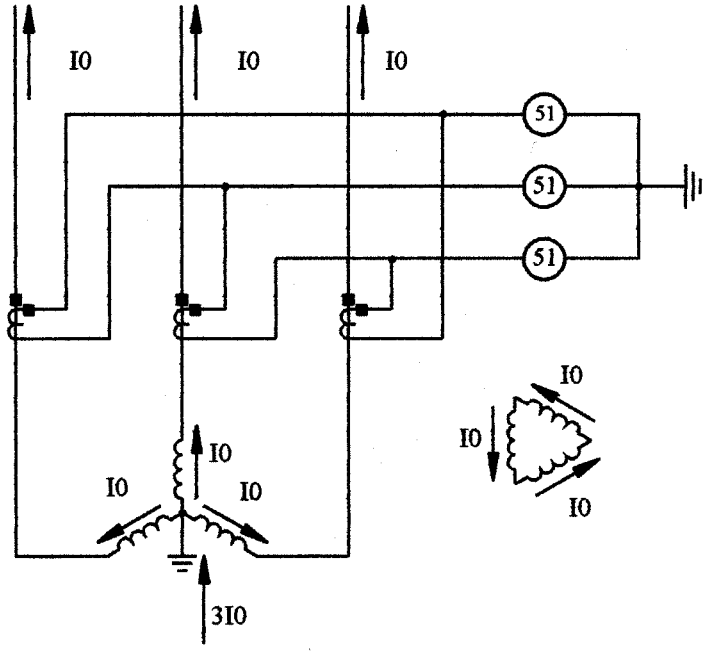

Figure 12(b)—Protection of grounding transformers: Y-Δ

Copyright © 2000 IEEE. All rights reserved.

Copyright The Institute of Electrical and Electronics Engineers, Inc.
Provided by IHS under license with IEEE
No reproduction or networking permitted without license from IHS
Not for Resale

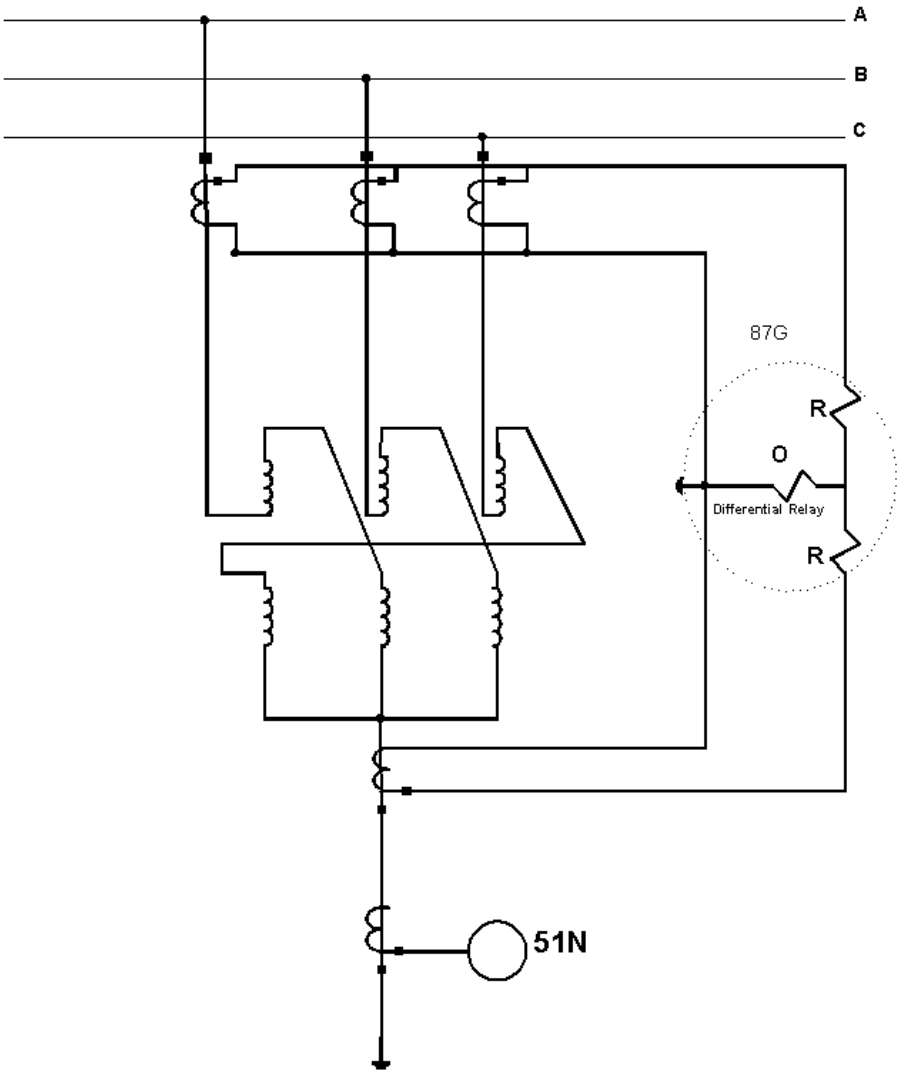

Figure 12(c)—Zig-zag grounding transformer differential protection with backup ground relay

If the continuous current rating is not available, it can be determined as follows:

a) Obtain the zero phase sequence impedance (ohms, percent, or per unit on some base) from the transformer manufacturer.

b) Determine a kilovoltampere rating that will have approximately the same zero sequence impedance relative to the grounded neutral side by assuming a mean value of the standard range of impedances.

c) Having determined the fictitious kilovoltampere rating, choose the CT ratio based on full load current for that kilovoltampere rating.

Copyright © 2000 IEEE. All rights reserved.
Copyright The Institute of Electrical and Electronics Engineers, Inc.
Provided by IHS under license with IEEE
No reproduction or networking permitted without license from IHS
Not for Resale

6.6 Backup and external fault protection

Protection of a transformer against damage due to failure to clear an external fault should always be carefully considered.

Such damage usually manifests itself as internal, thermal, or mechanical damage caused by fault current flowing through the transformer. Figures A.1–A.4 and Figure A6 (a, b, and c) in Annex A show curves of the maximum through-fault currents that will limit damage to the transformer. Through-faults that can cause damage to the transformer include restricted faults and those some distance away from the station. The fault current, in terms of the transformer rating, tends to be low (approximately 0.5–5.0 times transformer rating) and the bus voltage tends to remain at relatively high values. The fault current will be superimposed on load current, compounding the thermal load on the transformer.

Several factors will influence the decision as to how much and what kind of backup is required for the transformer under consideration. Significant factors are the operating experience with regard to clearing remote faults; the cost-effectiveness of providing this coverage, considering the size and location of the transformer; and the general protection philosophies used by the utility.

Backup protection for the transformer can be divided into several categories, as described in the following subclauses.

6.6.1 Overcurrent relays

When overcurrent relays are used for transformer backup, their sensitivity is limited because they should be set above maximum load current. Separate ground relays may be applied with the phase relays to provide better sensitivity for some ground faults. Usual considerations for setting overcurrent relays are described in 6.3.

When overcurrent relays are applied to the high-voltage side of transformers with three or more windings, they should have pickup values that will permit the transformer to carry its rated load plus margin for overload. Locating phase overcurrent relays on the low-voltage side of each winding allows a gain in sensitivity, since only the full load rating of an individual winding need be considered.

When two or more transformers are operated in parallel to share a common load, the overcurrent relay settings should consider the short-time overloads on one transformer upon loss of the other transformer. Relays on individual transformers may require pickup levels greater than twice the forced-cooling rating of the transformer to avoid tripping. Higher pickup levels result in a loss of backup protection sensitivity. To improve the sensitivity of backup protection, the CTs on each transformer source to a bus may be paralleled so that one set of overcurrent relays receives the total current of the sources associated with the individual bus. Switching out a transformer, therefore, does not affect the relay sensitivity. However, all sources should be tripped when the overcurrent relays operate. This is usually referred to as a *bus overload* or *partial differential scheme*.

For sensitive ground protection, each transformer neutral may be grounded through a CT with a lower ratio than that used for the phase overcurrent relay. With due consideration for imbalanced phase-to-ground load and time coordination, it may be possible to approach the sensitivity of the feeder ground relays. See 6.3 and 6.4 for a comprehensive discussion of overcurrent and ground protection, respectively.

6.6.2 Negative sequence relays

Since these relays do not respond to balanced-load or three-phase faults, negative sequence overcurrent relays may provide the desired overcurrent protection. This is particularly applicable to Δ–Y grounded transformers where only 58% of the secondary per unit phase-to-ground fault current appears in any one primary phase conductor. Backup protection can be particularly difficult when the Y is impedance-grounded.

Copyright © 2000 IEEE. All rights reserved.

Copyright The Institute of Electrical and Electronics Engineers, Inc.
Provided by IHS under license with IEEE
No reproduction or networking permitted without license from IHS
Not for Resale

A negative sequence relay can be connected in the primary supply to the transformer and set as sensitively as required to protect for secondary phase-to-ground or phase-to-phase faults. This relay will also provide better protection than phase overcurrent relays for internal transformer faults. The relay should be set to coordinate with the low-side phase and ground relays for phase-to-ground and phase-to-phase faults. The relay must also be set higher than the negative sequence current because of unbalanced loads.

6.6.3 Fuses

Application of fuses to the high-voltage or source windings of transformers presents the same types of sensitivity problems discussed in 6.3. In addition, fuses are single-phase devices and operate individually. See 6.1 for discussion of the application of fuses.

6.6.4 Breaker failure

Protection for the failure of a feeder breaker to clear a fault may be provided by addition of a timer started by the operation of feeder overcurrent relays in a breaker failure scheme. The principal advantage of this arrangement is that the backup sensitivity is equal to that of the feeder protection. The additional complication of this protection does increase the risk of inadvertent loss of the station load due to relay malfunction or testing errors. Breaker failure protection associated with a transformer requires a scheme that may have to recognize small fault currents. Breaker “a” switches may have to be used in combination with fault current detectors. A transformer connected to a line without a line-side breaker requires transfer-trip or a ground switch to cause the remote breaker to trip. If the remote breaker fails to trip, the transformer fault probably will not be cleared. See Annex B for additional information.

6.6.5 Dual-input relays

System voltages are lower during fault conditions than during load conditions with comparable current. This results from the fault current being highly reactive, which causes larger voltage drops across the system. This fact is utilized in several different dual-input relays.

6.6.5.1 Voltage-controlled overcurrent relay

In this relay, the overcurrent unit is set on the basis of the minimum fault-current condition independent of any load-current requirements. This relay is then torque-controlled by an undervoltage relay. The undervoltage unit is set to operate below the normal minimum system load voltage, but above the maximum expected fault voltage. Thus, sensitive phase fault protection is provided with no hazard of tripping due to load current. Low-side potential should be used to allow the undervoltage unit to drop out for low-side faults. The potential supply should be monitored. There may be an application problem with this relay if the system voltage during a limited fault is not reduced substantially.

6.6.5.2 Voltage-restraint overcurrent relay

In this relay the overcurrent unit operating value is a function of the applied voltage. The relay is set so that maximum load current will not cause operation with the minimum expected system operating voltage. During fault conditions, the reduced voltage causes less restraint and the relay will operate at a lower current, which varies with the voltage magnitude. There may be an application problem with this relay if the system voltage during a limited fault is not reduced substantially.

6.6.5.3 Impedance relay controlling an overcurrent relay

This scheme is less dependent on the exact change in the level of system voltage than either of the above two methods. In this method, the impedance from the relay location to the most distant fault needing backup protection is set on the distance relay, with suitable margin. The overcurrent relay is then set at a current less

Copyright © 2000 IEEE. All rights reserved.
Copyright The Institute of Electrical and Electronics Engineers, Inc.
Provided by IHS under license with IEEE
No reproduction or networking permitted without license from IHS
Not for Resale

than the minimum expected fault current. An mho-type distance relay characteristic provides improved fault/load discrimination over a straight impedance relay.

6.6.5.4 Overcurrent directional relay

This relay, in contrast to a directional overcurrent relay, responds only to the product of the current magnitude times the cosine of the angle between this current and a voltage reference. The magnitude of the voltage does not enter into the operating equation, provided it is above a prescribed limit. In this application, the relay can be connected to respond only to the reactive component of current. It will not respond to the real component of any load current and hence has good loadability. The relay is set for the minimum expected fault current with suitable margin.

6.7 Temperature relays

Transformer damage from remote low-current faults that are not properly cleared may be similar to that from sustained overload causing thermal damage. The most direct solution to the backup problem is the use of thermal relays as discussed in Clause 8.

6.8 Miscellaneous relays

In certain applications, advantages can be taken of relays not directly associated with the transformer. In the case of a unit-connected generator, backup may be provided by protective relays essentially designed for generator backup. These include the voltage-controlled overcurrent relay, the distance relay for remote faults (usually applied with a fixed time delay rather than inverse time delay), the generator negative sequence overcurrent relay, and the generator overexcitation relay.

7.Mechanical detection of faults

Some transformer faults go undetected when the schemes described in Clause 6 are used. A turn-to-turn fault can cause considerable current in the shorted turn, while current in the remaining winding remains relatively unchanged. Since there is little or no change in the current monitored by the CTs, there is no differential current to operate the relays. Eventually, the turn-to-turn fault will evolve into a ground fault, giving the protective relays the necessary change in current to operate.

There are two methods of detecting transformer faults other than by electric measurements. These methods are

a) Accumulation of gases due to slow decomposition of the transformer insulation or oil. These relays can detect heating due to high-resistance joints or due to high eddy currents between laminations.
b) Increases in tank oil or gas pressures caused by internal transformer faults.

7.1 Gas accumulator relay

This type of relay, commonly known as the Buchholz relay, is applicable only to transformers equipped with conservator tanks and with no gas space inside the transformer tank. The relay is placed in the pipe from the main tank to the conservator tank and is designed to trap any gas that may rise through the oil. It will operate for small faults by accumulating the gas over a period of time or for large faults that force the oil through the relay at a high velocity. This device is able to detect a small volume of gas and accordingly can detect arcs of low energy. The accumulator portion of the relay is frequently used for alarming only; it may detect gas that is not the result of a fault, but that can be evolved by gassing of the oil during sudden reduction of pressure.

Copyright © 2000 IEEE. All rights reserved.

Copyright The Institute of Electrical and Electronics Engineers, Inc.
Provided by IHS under license with IEEE
No reproduction or networking permitted without license from IHS
Not for Resale

This relay may detect heating due to overall heating, high-resistance joints, high eddy currents between laminations, low- and high-energy arcing, or accelerated aging caused by overloading.

7.2 Gas detector relay

The gas detector relay can be used only on conservator transformers, either conventional or sealed. The relay will often detect gas evolution from minor arcing before extensive damage occurs to the windings or core. This relay may detect heating due to overall heating, high-resistance joints, high eddy currents between laminations, low- and high-energy arcing, or accelerated aging caused by overloading.

Essentially, the gas detector relay is a magnetic-type liquid-level gage with a float operating in an oil-filled chamber. The relay is mounted on the transformer cover with a pipe connection from the highest point of the cover to the float chamber. A second pipe connection from the float chamber is carried to an eye-level location on the tank wall. This connection is used for removing gas samples for analysis. The relay is equipped with a dial graduated in cubic centimeters and a snap action switch set to give an alarm when a specific amount of gas has been collected.

7.3 Pressure relays

When high current passes through a shorted turn, a great deal of heat is generated. This heat, along with the accompanying arcing, breaks down the oil into combustible gases. Gas generation increases pressure within the tank. A sudden increase in gas pressure can be detected by a sudden-pressure relay located either in the gas space or under the oil. The sudden-pressure relay usually operates before relays sensing electrical quantities, thus limiting damage to the transformer.

One drawback to using a sudden-pressure relay is its tendency to operate on high-current through-faults. The sudden high current experienced from a close-in through-fault causes windings of the transformer to move. This movement causes a pressure wave that is transmitted through the oil and detected by the sudden-pressure relay. If the pressure is large enough, the sudden-pressure relay operates. Various methods to prevent undesired operation have been developed. The most common method takes advantage of the fact that a close-in through-fault creates a high current in the transformer. An instantaneous overcurrent relay supervises the sudden-pressure relay. Any high-current condition detected by the instantaneous overcurrent relay blocks the sudden-pressure relay. This method limits the sudden-pressure relay to low-current incipient fault detection. Another method, used less often, is to place sudden-pressure relays on opposite corners of the transformer tank. Any pressure wave due to through-faults will not be detected by both sudden-pressure relays. The contacts of the sudden-pressure relay are connected in series so both must operate before tripping.

Experience with sudden-pressure relays varies. Because of the drawback mentioned above, some users choose to use sudden-pressure relays for alarm only. Others are reevaluating their use altogether, since most times the high-speed differential relay and the sudden-pressure relay both operate for faults. Still, the sudden-pressure relay is a viable protection alternative for turn-to-turn fault detection in some applications, particularly grounding transformers and transformers with complicated circuits, such as phase-shifting transformers, which make applying differential protection difficult.

7.3.1 Sudden-oil-pressure relay

The sudden-oil-pressure relay is applicable to all oil-immersed transformers and is mounted on the transformer tank wall below the minimum liquid level. Transformer oil fills the lower chamber of the relay housing, within which a spring-backed bellows is located. The bellows is completely filled with silicone oil, and additional silicone oil in the upper chamber is connected to that in the bellows by way of two small equalizer holes.

Copyright © 2000 IEEE. All rights reserved.

Copyright The Institute of Electrical and Electronics Engineers, Inc.
Provided by IHS under license with IEEE
No reproduction or networking permitted without license from IHS Not for Resale

A piston rests on the silicone oil in the bellows, but extends into the upper chamber, separated from a switch by an air gap. Should an internal fault develop, the rapid rise in oil pressure or pressure pulse is transmitted to the silicone oil by way of the transformer oil and the bellows. This then acts against the piston, which closes the air gap and operates the switch.

In the event of small rises in oil pressure—due to changes in loading or ambient, for example—the increased pressure is also transmitted to the silicone oil. However, instead of operating the piston, this pressure is gradually relieved by oil escaping from the bellows into the upper chamber by way of the equalizer holes. The bellows then contracts slightly. The pressure bias on the relay is thus relieved by this differential feature. Relay sensitivity and response to a fault are thus independent of transformer operating pressure.

This relay has proven sufficiently free from false operations to be connected for tripping in most applications. It is important that the relay be mounted in strict accordance with the manufacturer's specifications. Further, a scheme similar to Figure 13 (a) or Figure 13 (b), providing a shunt path around the 63X auxiliary relay coil or element, is preferred to prevent its operation by control circuit electrical disturbances.

7.3.2 Sudden-gas/oil-pressure relay

A more recent version of the above relays utilizes two chambers, two control bellows, and a single sensing bellows. All three bellows have a common interconnecting silicone-oil passage with an orifice and ambient-temperature-compensating assembly inserted at the entrance to one of the two control bellows.

An increase in transformer pressure causes a contraction of the sensing bellows, thus forcing a portion of its silicone oil into the two control bellows and expanding them. An orifice limits the flow of oil into one control bellows to a fixed rate, while there is essentially no restriction to flow into the second control bellows. The two control bellows expand at a uniform rate for a gradual rate of rise in pressure, but during high rates of transformer pressure rise, the orifice causes a slower rate of expansion in one bellows relative to the other. The dissimilar expansion rate between the two control bellows will cause a mechanical linkage to actuate a snap-action switch, which initiates the proper tripping.

7.3.3 Sudden-gas-pressure relay

The sudden-gas-pressure relay is applicable to all gas-cushioned, oil-immersed transformers and is mounted in the region of the gas space. It consists of a pressure-actuated switch, housed in a hermetically sealed case and isolated from the transformer gas space except for a pressure-equalizing orifice.

The relay operates on the difference between the pressure in the gas space of the transformer and the pressure inside the relay. An equalizing orifice tends to equalize these two pressures for slow changes in pressure due to loading and ambient temperature change. However, a more rapid rise in pressure in the gas space of the transformer due to a fault results in operation of the relay. High-energy arcs evolve a large quantity of gas, which operates the relay in a short time. The operating time is longer for low-energy arcs.

This relay has proven sufficiently free from false operations to be connected for tripping in most applications. It is important that the relay be mounted in strict accordance with the manufacturer's specifications. Further, a scheme similar to Figure 13 (a) or Figure 13 (b), providing a shunt path around the auxiliary relay coil or element, is preferred to minimize the effects of control circuit electrical disturbances.

7.3.4 Static pressure relay

The static pressure relay can be used on all types of oil-immersed transformers. It is mounted on the tank wall under oil and responds to the static or total pressure. These relays, for the most part, have been superseded by the sudden-pressure relay, but many are in service on older transformers. However, because of their susceptibility to operation by temperature changes or external faults, a majority of the static pressure relays that are in service are connected for alarm only.

Copyright © 2000 IEEE. All rights reserved.

Copyright The Institute of Electrical and Electronics Engineers, Inc.
Provided by IHS under license with IEEE
No reproduction or networking permitted without license from IHS
Not for Resale

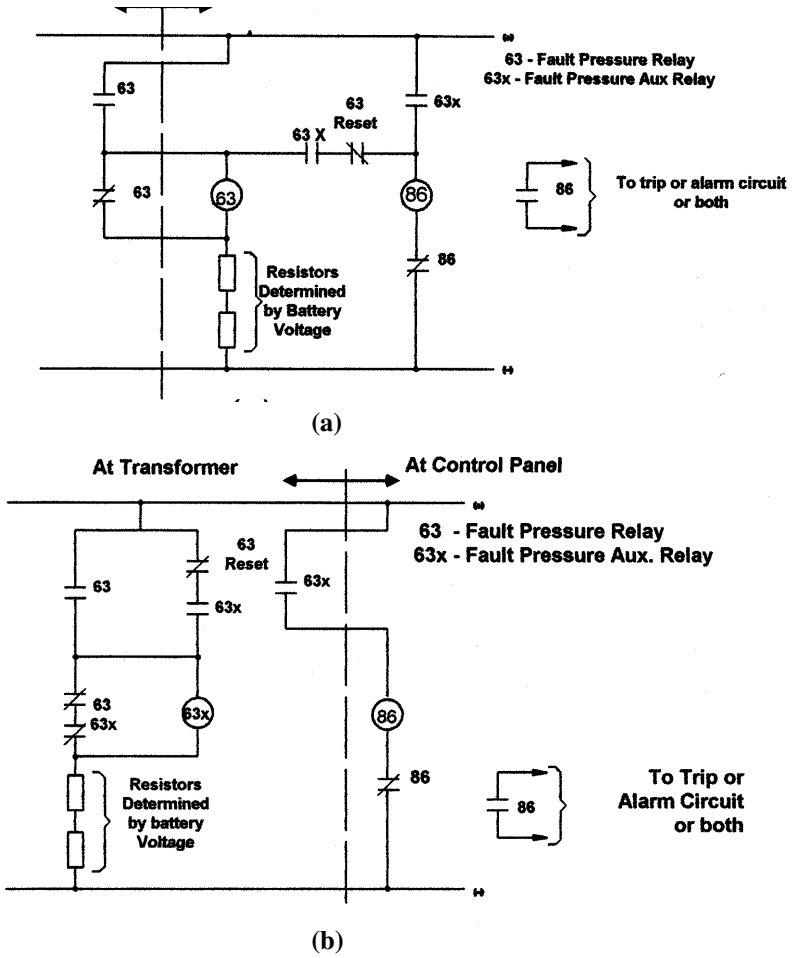

Figure 13—Fault pressure relay schemes:
(a) auxiliary relay at control panel;
(b) auxiliary relay at transformer with manual reset

8.Thermal detection of abnormalities

8.1 Thermal relays for winding temperature

8.1.1 Causes of transformer overheating

Transformers may overheat because of

a) High ambient temperatures
b) Failure of cooling system
c) External faults not cleared promptly
d) Overload
e) Abnormal system conditions such as low frequency, high voltage, nonsinusoidal load current, or phase-voltage unbalance

Copyright © 2000 IEEE. All rights reserved.
Copyright The Institute of Electrical and Electronics Engineers, Inc.
Provided by IHS under license with IEEE
No reproduction or networking permitted without license from IHS
Not for Resale

8.1.2 Undesirable results of overheating

a) Overheating shortens the life of the transformer insulation in proportion to the duration and magnitude of the high temperature.
b) Severe overtemperature may result in an immediate insulation failure.
c) Severe overtemperature may heat the transformer coolant above its flash temperature, causing a fire.
d) Overheating can generate gases that could result in an electrical failure

8.1.3 Hot-spot location

The location of the hottest spot within a transformer is predictable from the design parameters. It is customary to measure or to simulate this hot-spot temperature and to base control action accordingly. The desired control action will depend on the user's philosophy, on the amount of transformer life the user is willing to lose for the sake of maintaining service, and on the priority the user places on other aspects of the problem. Transformer top-oil temperature may be used, with or without hot-spot temperature, to establish the desired control action.

A common method of simulating the hot-spot temperature is with a thermal relay responsive to both top-oil temperature and to the direct heating effect of load current. In these relays, the thermostatic element is immersed in the transformer top oil. An electric heating element is supplied with a current proportional to the winding current, so that the responsive element tracks the temperature that the hot spot of the winding attains during operation. If this tracking is exact, the relay will operate at the same time that the winding reaches the set temperature. Since insulation deterioration is also a function of the duration of the high temperature, additional means are generally used to delay tripping action for some period of time. One common method is to design the relay with a time constant longer than that of the winding. Thus, the relay does not operate until some time after the set temperature has been attained by the winding. There are no standards established for this measuring technique, nor is information generally available for one to make an accurate calculation of the complete performance of such a relay. The relay can have from one to three contacts that close at successively higher temperatures. With three contacts, the lowest level is commonly used to start fans or pumps for forced cooling and the second level to initiate an alarm. The third step may be used for an additional alarm or to trip load breakers or deenergize the transformer.

Loss of oil flow requires special attention in transformers without a self-cooled rating. Heat exchangers in these transformers will dissipate only insignificant amounts of heat without operable cooling systems. The hot-spot relay is calibrated to replicate true hot-spot temperature with forced oil circulation in the windings, and will indicate a temperature many degrees cooler than the actual hot spot if oil flow is restricted. In such cases, detection of loss of oil flow may be used to drop load and deenergize the transformer. There are also some techniques that allow measurement of actual winding temperature.

Another type of temperature relay is the replica relay. This relay measures the phase current in the transformer and applies this current to heater units inside the relay. Characteristics of these heaters approximate the thermal capability of the protected transformer. In the application of replica relays, it is desirable to know the time constants of the iron, the coolant, and the winding. In addition, the relay should be installed in an ambient temperature approximately the same as that of the transformer and should not be ambient-compensated.

8.2 Other means of thermal protection

8.2.1 Top-oil temperature

Many transformers are equipped with a thermometer element immersed in the top oil. If this element is equipped with contacts that close at selected temperatures, the contacts can be used to start cooling fans or

Copyright © 2000 IEEE. All rights reserved.

Copyright The Institute of Electrical and Electronics Engineers, Inc.
Provided by IHS under license with IEEE
No reproduction or networking permitted without license from IHS
Not for Resale

pumps, or to sound an alarm. Since the top-oil temperature may be considerably lower than the hot-spot temperature of the winding, especially shortly after a sudden load increase, the top-oil thermometer is not suitable for effective protection of the winding against overloads. However, where the policy toward transformer loss of life permits, tripping on top-oil temperature may be satisfactory and has the added advantage of directly monitoring the oil temperature to ensure that it does not reach the flash temperature.

8.2.2 Fuses and overcurrent relays

Other forms of transformer protection such as fuses and overcurrent relays provide some degree of thermal protection to the transformer. Application of these devices is discussed in 6.1 and 6.3.

8.2.3 Thermal relays for tank temperature

In Y-connected, three-legged core-type transformers without Δ windings, during unbalanced conditions, the transformer tank acts as a high-impedance Δ–tertiary winding (generally known as a *phantom tertiary*), and under severe conditions, damaging heat can be produced. A thermal relay mounted to sense tank temperature will detect this condition, and since this condition usually occurs because of an open phase, which does not cause other protection to operate, the device should trip the transformer. The device can be a dial-type temperature indicator with a switch or a direct-acting thermostat. In either case, it should be placed in direct contact with the transformer tank. Settings of 105–125 °C will be above temperatures reached under normal operating conditions, and will correspond to temperatures reached in 1–4 min under maximum heating conditions (one phase of supply open and grounded). See 12.4 for overcurrent relay application.

8.2.4 Overexcitation protection

Overexcitation of a transformer can occur whenever the ratio of the per unit voltage to per unit frequency (V/Hz) at the secondary terminals of a transformer exceeds its rating of 1.05 per unit (PU) on transformer base at full load, 0.8 power factor, or 1.1 PU at no load. For the generator, the limit is 1.05 PU (generator base). When an overexcitation condition occurs, saturation of the laminated steel cores of the generator and transformer can occur. Stray magnetic fields increase in magnitude, particularly at the ends of the cores. Nonlaminated components at the ends of the cores, which were not designed to carry these higher levels of flux, begin to heat up because of the higher losses induced in them. This can cause severe localized overheating in the transformer and generator and eventual breakdown in the core assembly or winding insulation. The permissible short-time overexcitation capability of a specific transformer or generator should be obtained from the manufacturer. Figure 14 shows V/Hz limiting curves provided by three different transformer manufacturers.

Overexcitation is of major concern on directly connected generator unit transformers. One of the primary causes of excessive V/Hz on generators and unit transformers is operation of the unit under regulator control at reduced frequencies during generator start-up and shutdown. Another cause of excessive V/Hz is inadvertent manual overexcitation during generator start-up and shutdown. Overexcitation can also occur during complete load rejection that leaves transmission lines connected to a generating station. Under this condition the V/Hz may exceed 1.25 PU. With the excitation control in service, the overexcitation will generally be reduced to safe limits in a few seconds. With the excitation control out of service, the overexcitation may be sustained and damage can occur to the generator and/or transformers. Failures in the excitation system or loss of signal voltage [i.e., blown voltage transformer (VT) fuse] to the excitation control can also cause overexcitation.

Occasionally a transformer remote from a generation station will be exposed to overflux conditions that may not be protected by an overvoltage relay or by the V/Hz protection associated with a generation station. A typical case would be a transformer on the end of a long line connected to a generating plant. During a load rejection in which this transformer is connected to the generator, the transformer may have a significantly higher V/Hz than that at the generator facility as a result of the Ferranti effect. In this case, or similar cases, V/Hz protection should be applied to the remote transformer.

Copyright © 2000 IEEE. All rights reserved.

Copyright The Institute of Electrical and Electronics Engineers, Inc.
Provided by IHS under license with IEEE
No reproduction or networking permitted without license from IHS Not for Resale

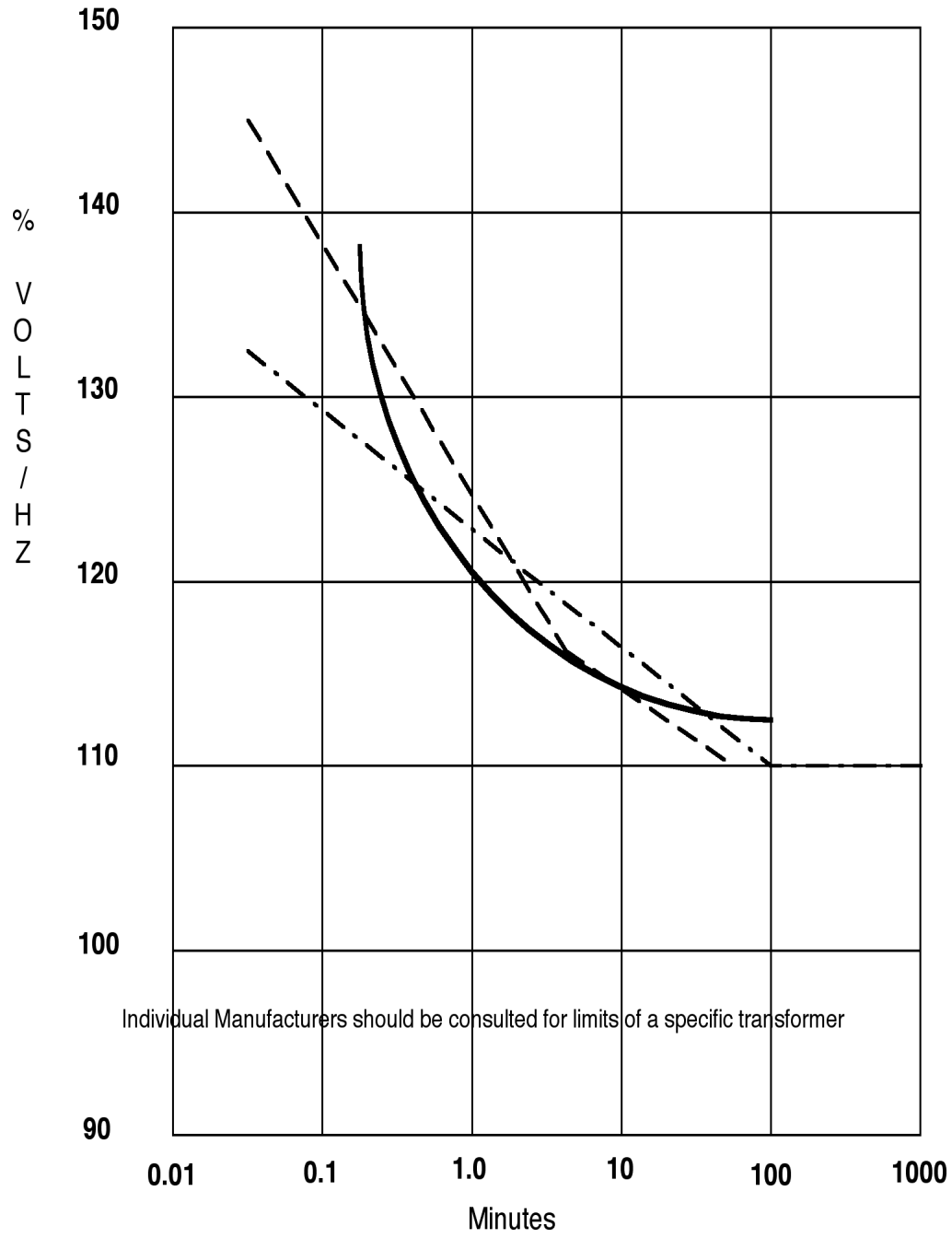

Figure 14—Transformer overexcitation limits of three manufacturers

Overexcitation protection for the transformer is generally provided by the generator overexcitation protection, which uses the VTs connected to the generator terminals. So, the curves that define generator and transformer V/Hz limits must be coordinated to properly protect both pieces of equipment. Generally, the transformer V/Hz curve is put on a generator voltage basis

$$\text{Transformer V/Hz limit on generator basis} = \frac{(\text{Transformer V/Hz limit})(\text{Transformer primary voltage rating})}{\text{Generator voltage rating}}$$

Copyright © 2000 IEEE. All rights reserved.

Copyright The Institute of Electrical and Electronics Engineers, Inc.
Provided by IHS under license with IEEE
No reproduction or networking permitted without license from IHS
Not for Resale

Therefore, a 13.2/115 kV transformer being used as a step-up transformer for a 13.8 kV generator will reach its continuous no-load V/Hz limit of 110% at a generator voltage of 105.2% of the generator rated voltage.

Generator manufacturers recommend an overexcitation protection system as part of the generator excitation system. These systems (V/Hz limiters) will limit the V/Hz to a safe value in the automatic control mode. To provide protection when the unit is under manual control, the V/Hz limiter may send a relay alarm signal during an overexcitation condition and, if the condition persists, decrease the generator excitation or trip the generator and field breakers, or both. The generator manufacturer should be asked for recommendations for overexcitation protection.

It should be noted that, if the generator can be operated leading, the high-side voltage of the transformer may have a higher PU V/Hz than the generator V/Hz. This aspect may need to be considered in proper V/Hz protection of the transformer.

It is common practice to apply separate V/Hz protection in addition to the protection built into the excitation control system. Several forms of protection are available including definite time, preprogrammed inverse time curves, and user-programmable inverse time curves. A detailed discussion on various forms of V/Hz relays can be found in 4.5.4 of IEEE Std C37.102-1995 [B86]. When the transformer rated voltage is equal to the generator rated voltage, the same V/Hz relay that is protecting the generator may be set to protect the transformer. In some cases, however, the rated transformer voltage is lower than the rated generator voltage and protection may not be provided. It may, therefore, be desirable to provide supplementary protection for the transformer. Since the V/Hz capabilities of transformers may differ appreciably, it is not possible to provide definitive protection recommendations that would cover all units.

8.3 Testing thermal relays

Manufacturers' recommendations should be followed in testing and calibrating these devices. For example, a method with one design is to remove the relay from the transformer and immerse the temperature-sensitive element in a controlled-temperature oil bath. The heating element that provides the load current effect is an integral part of the well in which the relay sensing element is mounted, and provision is made to circulate current from a test source through the heater to check the operation of this element. These relays consist of dial-type temperature indicators with shaft-operated switches, and the design should ensure that the high-temperature contact, which is used for tripping, cannot be operated by reverse rotation under very low temperature conditions.

Calibration procedures should ensure that the relay contacts and the temperature-dial indication are within specified limits. The thermal time constant of the system is not usually field-adjustable. It can be confirmed by plotting the indicated temperature versus time duration of a constant load current. The time constant is the time it takes for the reading to reach 63.2% of the total change of temperature readings. This should relate to the 5–15 min time constant of the transformer winding, rather than to the 1–2 h time constant of the oil. The calibration cannot be considered complete without confirming the ratio of the CT used to provide current to the relay heating element. These CTs are generally made to saturate at high fault current, so as to avoid heater damage and to ensure that the thermal relay does not operate before planned protective relay action occurs. Should severe overloads also cause CT saturation, the thermal relay will not respond in the desired manner.

9.Fault clearing

A faulted transformer can be separated from its power source by devices such as circuit breakers, power-operated disconnect switches, circuit switchers, and fuses, or by remote tripping of fault-interrupting devices. In addition to separating the transformer from its power source, due consideration should be given to tripping oil pumps and fans to reduce their possible adverse effects in sustaining or spreading a

Copyright © 2000 IEEE. All rights reserved.
Copyright The Institute of Electrical and Electronics Engineers, Inc.
Provided by IHS under license with IEEE
No reproduction or networking permitted without license from IHS
Not for Resale

transformer oil fire and to halt circulation of contaminants in the oil resulting from the arc. Determination of the type of fault-clearing devices to be used should consider factors such as

a) Installation and maintenance cost
b) Fault-clearing time relative to fire hazard and repair or replacement costs of the transformer
c) System stability and reliability
d) System operating limitations
e) Device interrupting capability

9.1 Relay tripping circuits

Usually a transformer protective relay operation requires a careful inspection for the cause of tripping before any attempt is made to reenergize the transformer. Usually two or more breakers or switching devices must be tripped. Therefore, tripping is usually done by a lockout relay that also blocks closing circuits and must be reset manually.

For a large transformer having several protective relays, two lockout relays and dc power supplies are often used. If both lockout relays trip the same breakers, the differential relays may operate one lockout relay and the sudden-pressure relay and overcurrent relays, including instantaneous units, may operate the second lockout relay for the greatest redundancy. If the two lockout relays perform different tripping functions, then a different assignment of protective relays to each lockout relay may be desired. The lockout relay contacts may initiate breaker failure relaying and may be supplemented by a small self-reset relay operated in parallel with the lockout relay coil for redundancy.

Relays should be connected to trip fault-interrupting devices that will clear faults in the zone that the relay is intended to protect. For example, the relay devices 87G in Figure 8, 67G in Figure 9, and 51GB and 51GT in Figure 10 must trip the transformer high-side (source) circuit breaker in order to clear a ground fault on the low-voltage side of the transformer.

9.2 Circuit breakers

Circuit breakers directly actuated by a protective relay system are usually provided where it is desirable to isolate a faulted transformer with minimum effect on other segments of the power system. They offer the fastest fault-clearing time and highest interrupting capability.

Many of the diagrams in this guide show only relay connections and not circuit breaker location. Wherever possible, the circuit breaker should be included in the relay zone of protection so that a fault in the breaker or leads to the transformer and its bushings is detected.

9.3 Remote tripping of circuit breakers

In some situations, it may be difficult to justify the cost of local circuit breakers. Tripping of remote-source circuit breakers by use of local relays and a communications channel, or by use of a fault-initiating switch (high-speed ground switch) are alternatives.

9.3.1 Transfer trip schemes

Five types of communication channel are in general use for transferring a trip signal to remote circuit breakers: pilot wire, power-line carrier, fiber optic, and microwave or radio. In direct-transfer trip schemes, the receipt of a signal will trip local circuit breakers independently of local relays. The signal may be a simple application of voltage or audio tones on a pair of wires or may utilize frequency-shift-type audio tones, or

Copyright © 2000 IEEE. All rights reserved.

Copyright The Institute of Electrical and Electronics Engineers, Inc.
Provided by IHS under license with IEEE
No reproduction or networking permitted without license from IHS
Not for Resale

frequency-shift carrier. Frequency-shift equipment employs a guard frequency for channel monitoring and added security against trips by spurious signals. Transformer protective relays will actuate the shift to trip frequency. These schemes have the advantage of speed and the ability to block reclosing of the remote circuit breakers until the faulted transformer is isolated from the system.

9.3.2 Fault-initiating switch (high-speed ground switch)

Remote tripping of circuit breakers can be accomplished by applying a fault (usually solid single phase-to-ground) to the source line so that the remote line relays will detect it and trip the remote circuit breakers. A disadvantage of this scheme is the additional time involved while the ground switch is closing and remote relays in turn detect the fault. Another consideration is that the ground switch phase and the faulted phase on the transformer may be different, thus imposing a multiphase fault on the system.

9.3.3 Disconnecting switch

When remote tripping is used, a power-operated disconnecting switch is usually connected on the source side of the transformer to isolate it from the system. The switch is arranged to open automatically and cancels the remote transfer trip signal or isolates the ground switch from the system. In both cases, this permits the remote breakers to reclose.

9.4 Circuit switcher

A circuit switcher is a mechanical switching device with a limited fault-interrupting rating. Internal faults or secondary faults limited by transformer impedance, where the magnitude of current is below the interrupting rating of the circuit switcher, can be cleared. It should be possible to coordinate remote line relays to avoid remote tripping for the lower-magnitude faults. High-magnitude source-side faults on the transformer exceeding the interrupting rating of the circuit switcher should be detected by remote line relays and cleared by the remote breakers before the circuit switcher opens. The circuit switcher may be blocked from tripping by an instantaneous overcurrent relay or it may be allowed to attempt interruption, depending on user preference. The remote breakers should clear the fault before the slower circuit switcher contacts open.

9.5 Fuses

When applicable, power fuses are used because of their low installation cost and simplicity (see 6.1).

9.6 Other practices

It is not uncommon to adapt permissive overreaching tone or carrier-blocking line protection schemes to permit the remote line relaying to operate to clear a faulted transformer from the electric system. If line protection schemes employ impedance-measuring types of relays, however, they may not respond to low-side or winding faults.

Another practice is to use the source-side motor-operated disconnect switch with no fault-interrupting capability as a backup for one of the above applications. The transformer protective relays initiate opening of the switch independently of other protective devices on the basis that should the switch fail, a fault develops of a magnitude sufficient to cause remote relay operation. These switches are usually quite slow in opening (2 s or more), depending on the motor operator used.

Copyright © 2000 IEEE. All rights reserved.
Copyright The Institute of Electrical and Electronics Engineers, Inc.
Provided by IHS under license with IEEE
No reproduction or networking permitted without license from IHS
Not for Resale

10.Reenergizing practice

There is no universal practice with respect to reenergizing a transformer that has been disconnected from the system by relay action that may have been caused by a transformer fault. Since no one would intentionally energize an internally faulted transformer, the differences in practice seem to be based on the lack of knowledge of where the fault was or whether there was a fault.

Consider a transformer differential arrangement that includes external leads. A fault within the differential zone may not be an internal fault. If the transformer has a pressure relay, this may give indication of an internal fault. If not, one has to rely on the presence or lack of evidence indicating an external fault. In the absence of definite information that a fault was external, most operating companies will not reenergize the power transformer without a complete check.

Now consider a form of transformer protection that includes just the transformer. This may be a differential relay (operating from transformer bushing CTs) or a pressure relay. The one reason to reenergize a transformer so protected is the lack of confidence in the relays. While a few may reenergize a transformer so protected, it may be argued that such a practice does not appear to be warranted with modern relays.

The use and location of the transformer will affect the decision whether or not to reenergize. One is less likely to reenergize a generator step-up transformer or a large system tie transformer than a small substation transformer. The presence of a spare transformer would lessen the necessity to reenergize right away. A history of failures of a certain type transformer may affect the decision by operating companies to reenergize that type of transformer.

If a user's practice is not to reenergize after a protective relay has disconnected the transformer from the system, a real and continuing problem is how to proceed after such a relay operation; that is, if no fault is evident on visual inspection, what should be done to determine whether or not an actual fault exists? Several tests are available to check a transformer prior to reenergizing. Turns ratio tests, resistance tests, and low-voltage impulse tests are available, but gas analysis is now the most used test. Gas analysis has become increasingly popular and found to be quite reliable when properly performed. See IEEE Committee Report [B51] and Pugh and Wagner [B76].

Normally, power transformers are not reenergized by automatic reclosing schemes except where the transformer may be connected to a line or bus that may be reenergized after a relay trip by the line or bus-protective relays. The transformer protective relays usually operate a lockout relay that trips the local interrupting devices (power circuit breaker, circuit switcher, or disconnect switch) and prevents the devices from closing. Where a local interrupting device is not present, transfer trip may be used to operate a remote interrupting device. The transfer trip may also be used to lock out the remote interrupting device, thus preventing reenergizing the transformer (Clause 9). If an automatic grounding switch is used on the high side of a transformer and high-speed reclosing is used on the line, the transformer will probably be reenergized before a high-side motor-operated disconnect switch (MODS) can open. However, if delayed reclosing is used on the line, the MODS will have time to open and the transformer will not be reenergized. Usually, high-speed reclosing would not be used on lines with automatic grounding switches.

If a transformer tapped on a line is fused on the high side, there is no way to prevent its reenergizing if the line relays detect the fault and trip, unless all three fuses blow.

Philosophies have changed somewhat in recent years, in that operating companies seem to have an increasing reluctance to reenergize transformers after a protective relay operation where the transformer might be subjected to a second fault. This reluctance is partly because of recent transformer failure rates and partly because of increased cost and time to repair internal failures. Also, operating companies are gaining more confidence in protective relays, particularly pressure relays.

Copyright © 2000 IEEE. All rights reserved.

Copyright The Institute of Electrical and Electronics Engineers, Inc.
Provided by IHS under license with IEEE
No reproduction or networking permitted without license from IHS
Not for Resale

11.Gas analysis

Electrical faults in oil-filled transformers usually generate gases, some of which are combustible. Many transformer faults in their early stages are incipient and deterioration is gradual, but sufficient quantities of combustible gases are usually formed to permit detection and allow corrective measures to forestall a serious outage.

Depending on the transformer oil preservation system, the gas may either be dissolved in the oil or enter the gas space above the oil. In certain types of transformer design that facilitate the accumulation of gas, it may be possible to install a gas detector relay. These relays are usually set to alarm for the presence of gas.

It is common practice to draw off samples of oil or gas for periodic analysis of combustible gas content. If there is a gas space in the oil preservation system, it is possible to directly draw off a sample of the gas and perform an on-the-spot analysis with a portable gas analyzer. If there is no gas space in the transformer, it is necessary to analyze an oil sample for dissolved gas content by gas chromatography (see Bean and Cole [B69]).

The presence of key gases is an indicator of the location of the source of the gas

a) *Hydrogen* is generated by corona or partial discharges. The presence of other key gases can indicate the source of the discharge.

b) *Ethylene* (C_2H_4) is the key gas associated with the thermal degradation of oil. Trace generation of associated gases (ethane and methane) may start at 150 °C. Significant generation of ethylene begins around 300 °C.

c) *Carbon monoxide and carbon dioxide* are generated when cellulose insulation is overheated.

d) *Acetylene* (C_2H_2) is produced in significant quantities by arcing in the oil.

To interpret the results of the analysis, the relative ratios of key gases are used. There has been substantial work to define the best methods for interpreting the results and guidelines have been published in IEEE Std C57.104-1991 [B74] and IEC 60599: 1978 [B8].

Gas analysis on transformers should be made periodically by manual or automatic methods. The interval between tests may be varied according to size, importance, loading, and exposure to faults. This test should also be made after protective relay or relief diaphragm operation and before reenergizing, if practical. It should be made on new transformers after installation and original loading.

12.Special protective schemes

Many transformer protection problems can be solved by means of special CT connections. The applications presented are in industry use but are not readily found in the published literature.

12.1 Overall unit generator differential

12.1.1 Configuration

This consists of a unit generator and a transformer with the winding of the generator in Y, high-impedance grounded through a transformer with secondary resistor. The unit transformer low-side winding is in Δ with the high-side winding in a solidly grounded Y.

Copyright © 2000 IEEE. All rights reserved.
Copyright The Institute of Electrical and Electronics Engineers, Inc.
Provided by IHS under license with IEEE
No reproduction or networking permitted without license from IHS
Not for Resale

12.1.2 Problem

Overall unit differential relay operation on sudden unloading of a machine is to be avoided. False tripping and indicating of unit trouble can cause operating confusion and delay restoration.

A sudden unit unloading during a fault may be caused by the clearing of a system fault and, hence, the machine may be at ceiling excitation if the fault has persisted for a second or more. The unit transformer may be excited with voltages exceeding 130% of normal. Because of transformer iron saturation with overexcitation, the exciting current can exceed 25% of the unit current rating. Hence, for relays without overexcitation restraint capability, normal differential relay connections could result in relay operation under these conditions.

12.1.3 Solution

As the transformer magnetizing current has appreciable harmonic content during overvoltage conditions, this current is used for additional restraint. Thus, the normal differential CT connections are altered as shown in Figure 15. The additional restraint is provided by inside-the-Δ CTs having the same ratio as those on the generator. The paralleling of the inside-the-Δ CTs eliminates normal load current. Only zero sequence current, third harmonics, and odd multiples of the third harmonic are supplied to the primaries of the three auxiliary CTs connected in series. The output of the auxiliary CTs is connected in Y and each supplies a differential relay restraint coil or element.

Normally a three-restraint coil or element differential relay is used for the overall unit. The three-relay restraint coils or elements are supplied from the generator, transformer high side, and station service CTs. To provide separate relay restraint from the inside-Δ CTs, the station service differential CTs are now paralleled with the generator CTs.

The conventional differential connections have Y CTs on the Δ-winding side and Δ CTs on the high-side grounded-Y winding. Thus the Δ CTs on the high side normally act as zero sequence filters. However, as zero sequence current is now inserted in the low-side connections, it also should be introduced in the high-side connections. This is done by connecting the high-side CTs in Y. Then, for proper phasing relationship, the low-side CTs are connected in Δ. Considering only the generator Δ CTs and the transformer high-side Y CTs, it is interesting to note that this connection is proper for load and external phase faults but not for external ground faults. The inside-the-Δ CTs provide the balance for external ground faults.

Thus, on overexcitation of an unloaded transformer, additional harmonic restraining current is provided to prevent misoperation of the relays. These CT connections to the harmonic restraining differential relays have been tested to 135% normal voltage. The transformer of one unit tested had a 150 MVA, 17/132 kV rating with exciting current of 23 A at normal voltage. With 135% of normal voltage applied, the exciting current was 604 A. On another 150 MVA, 17/132 kV unit, 135% of normal voltage resulted in 1175 A exciting current, which is 23% of full-load current. The saturation characteristic of each transformer determines the magnitude of exciting current at ceiling generator voltages. Several installations have performed correctly after clearing of high-voltage bus faults.

Figure 15 also shows the proper balance for an external ground fault. The main transformer is given as 1:1 overall voltage ratio and the CT ratios are shown for this condition. The fault current is assumed as 1 PU. Phasors for the CT connections are also shown in Figure 15.

NOTE—This modification must be used with caution, since transformers have been severely damaged by high temperatures from excessive magnetizing current. When this scheme is used, overexcitation relaying should be considered.

Copyright © 2000 IEEE. All rights reserved.

Copyright The Institute of Electrical and Electronics Engineers, Inc.
Provided by IHS under license with IEEE
No reproduction or networking permitted without license from IHS
Not for Resale

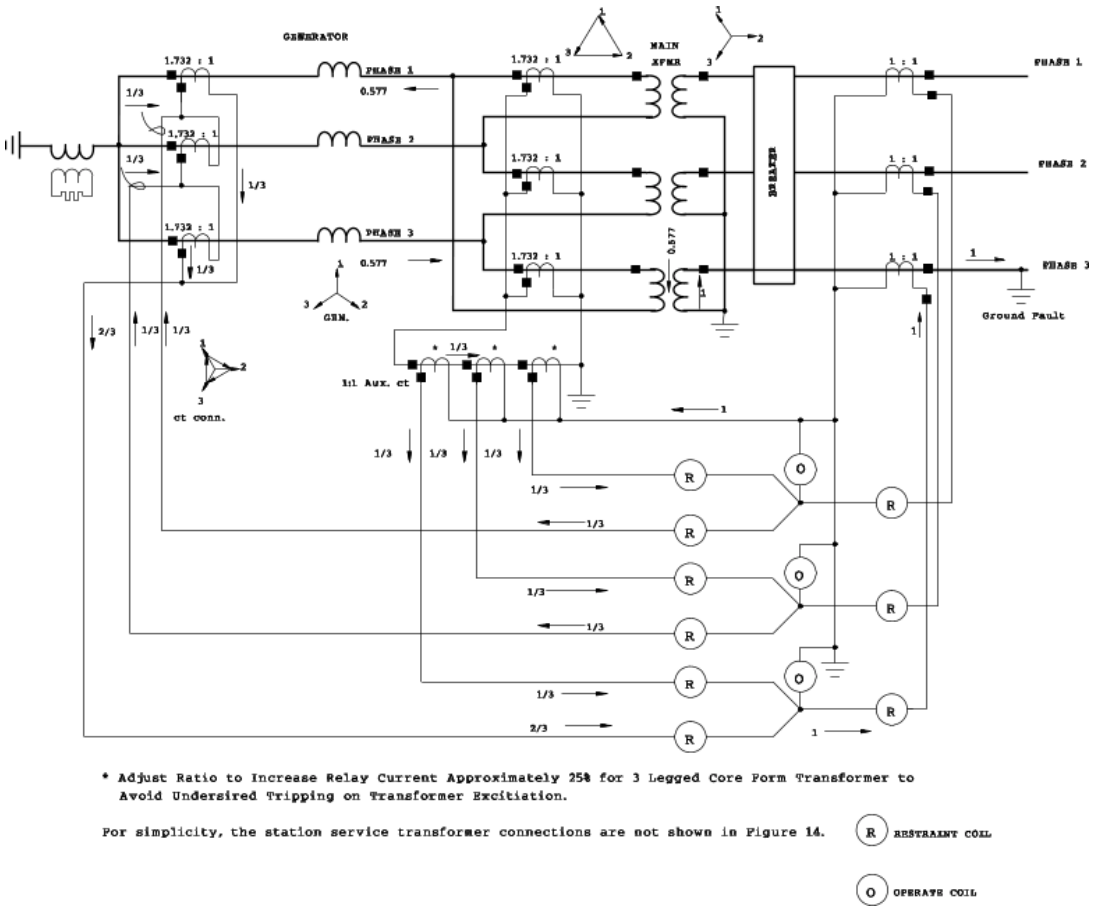

Figure 15—Special differential relay connections for overall protection of unit generator

12.2 Unit transformer of three-legged core form type

If the unit transformer has three-legged core form construction, the zero sequence current contribution of the transformer case is not accounted for by the connections shown in Figure 15. In such core form transformers, the case may contribute as much as 20–25% of the zero sequence current. Thus the previously described differential connections require modification. While exact solutions are possible with additional auxiliary CTs, for simplicity these are not discussed. A simple empirical solution is to adjust the ratio of the inside-the-Δ auxiliary CTs so that the current to the relay is increased by 25% (Figure 15). The ratio of the auxiliary CTs can be determined more accurately from the transformer manufacturer's zero sequence impedance test data.

12.3 Grounding transformer inside the main transformer differential zone

12.3.1 Configuration

To establish a grounded system, a grounding transformer is frequently tapped on the low-side leads of the supply transformer and is thereby included in the transformer differential zone.

Copyright © 2000 IEEE. All rights reserved.
Copyright The Institute of Electrical and Electronics Engineers, Inc.
Provided by IHS under license with IEEE
No reproduction or networking permitted without license from IHS
Not for Resale

12.3.2 Problem

Zero sequence current supplied by the grounding transformer may cause differential relay operation during an external ground fault.

12.3.3 Solution

Since external ground faults cause zero sequence current to flow in the CT secondary circuits, a zero sequence filter is provided for the low-side differential Y-connected transformers. This filter is composed of three auxiliary CTs and can be formed in several ways. The simplest form is to connect the primaries in Y and the secondaries in Δ. In Figure 16, the ratio of the auxiliary CTs is not critical, but a 5:5 ratio is suggested.

The alternative filter connection in Figure 16 requires a 1:3 ratio for the auxiliary CTs. The primaries are connected in Y and the junction or sum of the primaries is wired to the secondaries connected in series. Thus the secondaries carry three times the primary current. Both of these connections present relatively high magnetizing impedance to all but zero sequence current. However, modern differential relays are of even lower burden than the usual auxiliary CTs. Thus, the common point of the relay connections should not be connected to the common point of the Y-connected transformers (a connection that is necessary without the zero sequence filter). Only the filter neutral should be connected to the CT common point.

Figure 16 also shows the primary current and CT secondary current for an external ground fault. The zero sequence filter prevents a relay imbalance. A 1:1 overall voltage ratio is assumed in Figure 16 with 1 PU fault current flowing.

12.4 Unbalanced voltage protection for Y-connected, three-legged, core-type transformers

12.4.1 Configuration

Three-phase, three-legged, core-type Y-Y-connected transformer or autotransformer.

12.4.2 Problem

In Y-connected core-type transformers, the transformer case acts as a high-impedance Δ winding during unbalance voltage conditions. Damaging heat can be produced by sustained circulating current in the case.

12.4.3 Solution

An overcurrent relay is energized by CTs connected to duplicate the effective tertiary current in the case. For a two-winding transformer, the required zero sequence current is obtained by the connection of high- and low-side neutral CTs as shown in Figure 17 (a). An alternative method is shown in Figure 17 (b), where the sum of the residuals of Y-connected high- and low-side CTs is used. Figure 17 (c) shows the connections for an autotransformer using the residual of Y-connected CTs and a neutral CT.

12.4.4 Relay setting

The proper equivalent tertiary impedance of the case should be used to determine the zero sequence current for various faults. From this, the required relay sensitivity is established. A long-time dial setting for overcurrent relay operation will provide thermal protection and coordination with other relaying for external faults.

Copyright © 2000 IEEE. All rights reserved.

Copyright The Institute of Electrical and Electronics Engineers, Inc.
Provided by IHS under license with IEEE
No reproduction or networking permitted without license from IHS
Not for Resale

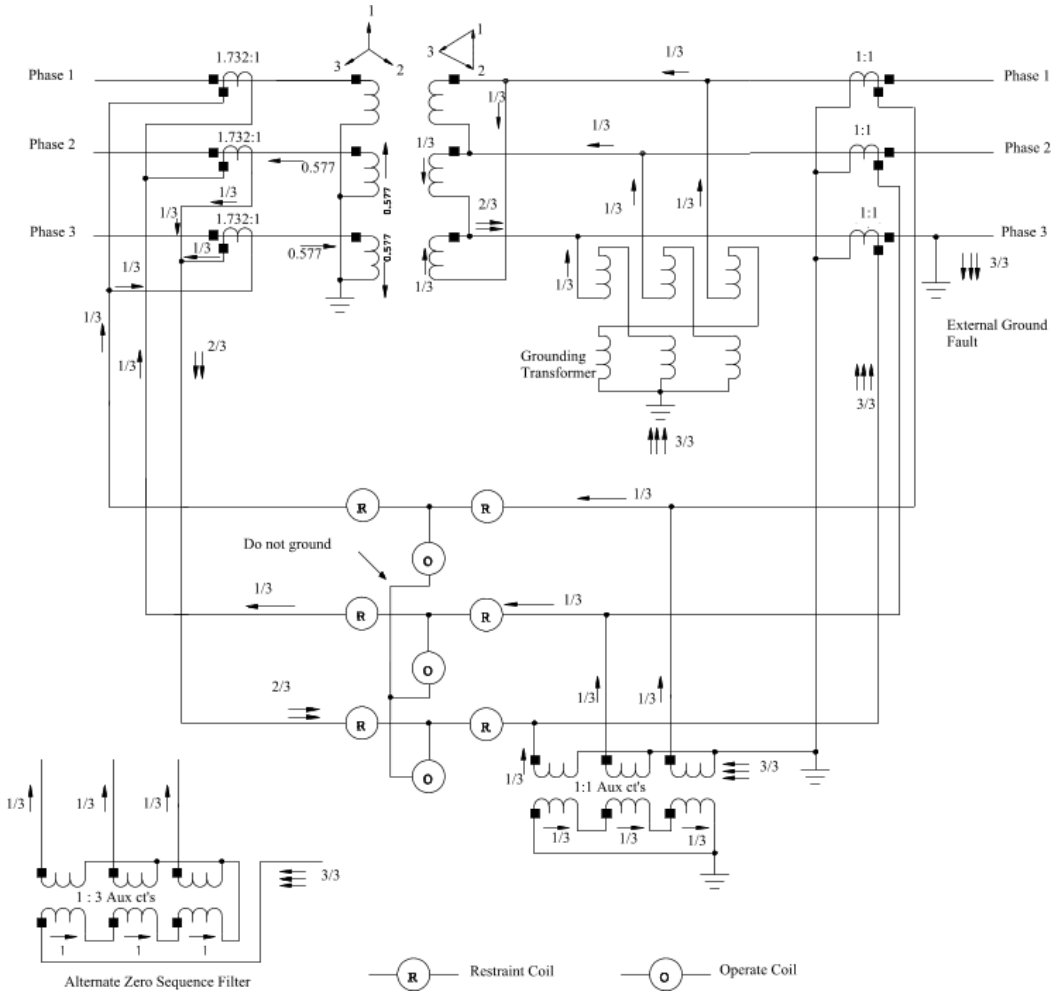

Figure 16—Grounding transformer in differential zone (external fault condition shown)

An application example using an inverse relay has relay pickup at 30% of transformer rating and a time of 1.7 s at 300% of setting. The pickup depends on the effective contribution of the equivalent tertiary of the case. The transformer manufacturer should be consulted.

12.4.5 Alternative solution

See 8.2.3.

12.5 Differential protection of single-phase transformers connected in three-phase banks

When single-phase transformers are connected in three-phase banks, care should be taken to ensure that a differential relay will operate for all internal transformer faults, particularly when the transformer has a Δ–connected winding. If CTs for the Δ tertiary are located in a breaker, the differential may be connected as it normally is for a three-phase transformer. But if the CTs should be located in the transformer, some special connections should be considered.

Copyright © 2000 IEEE. All rights reserved.
Copyright The Institute of Electrical and Electronics Engineers, Inc.
Provided by IHS under license with IEEE
No reproduction or networking permitted without license from IHS
Not for Resale

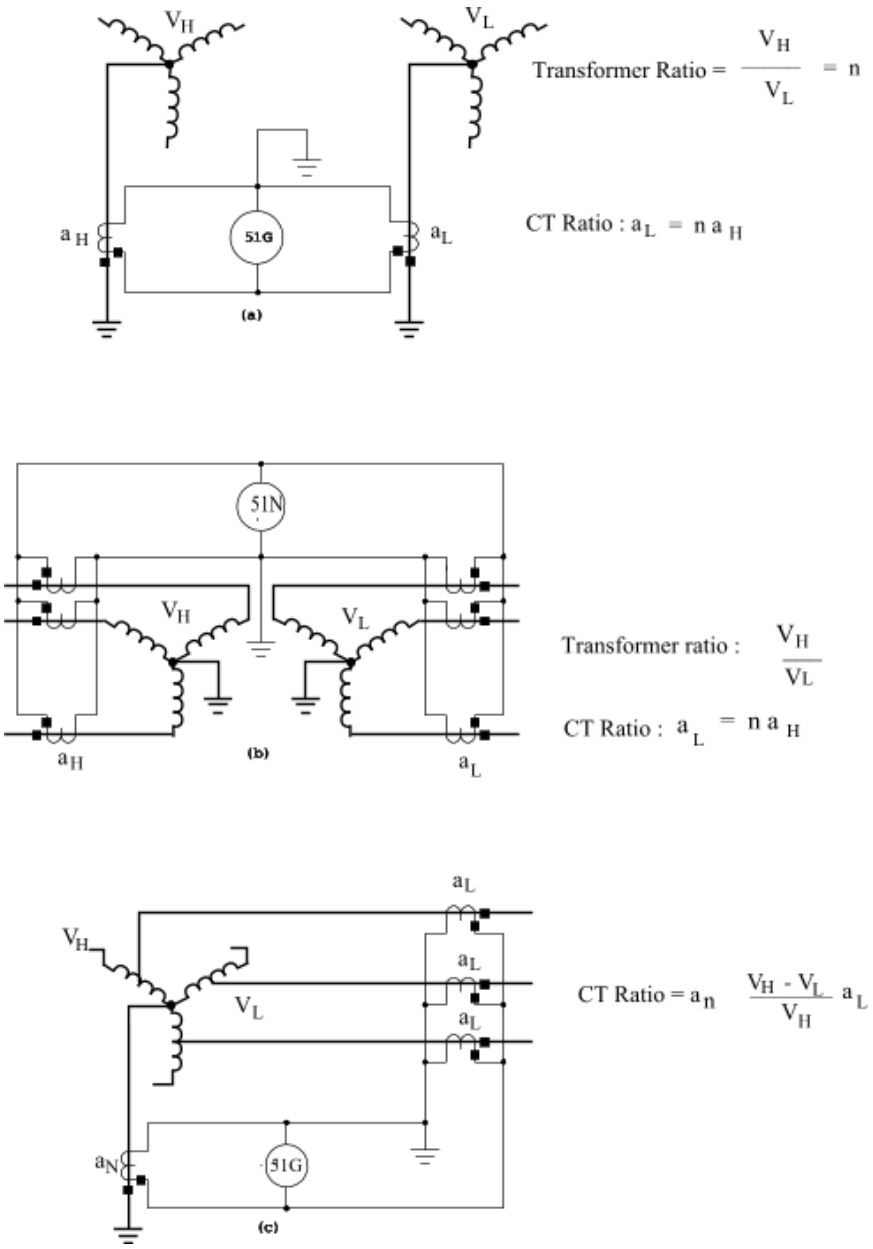

Figure 17—Protection of Y-connected core-type transformers with no Δ for unbalanced voltage conditions

Complete protection for internal faults requires CTs on both bushings of a winding if that winding is in a three-phase Δ connection. Without CTs on both bushings, an internal bushing flashover can go undetected by a differential relay if the connected system is grounded.

12.6 Differential protection of a bank of three single-phase autotransformers with Δ tertiary

Figure 18 and Figure 19 show two differential relay connections to provide complete winding protection for the Δ winding on a bank of single-phase autotransformers with a Δ tertiary. Note that the CT ratios and taps should take into account that the CTs in the Δ supply the relay with twice the winding current.

Copyright © 2000 IEEE. All rights reserved.

Copyright The Institute of Electrical and Electronics Engineers, Inc.
Provided by IHS under license with IEEE
No reproduction or networking permitted without license from IHS
Not for Resale

There are advantages for both connections. The connection in Figure 18 provides greater relay sensitivity because of the method of connecting the CTs in the Δ tertiary. Additionally, third-harmonic current in the Δ flows in the differential relay restraint circuit. The connection in Figure 19 will permit more than one relay to detect an internal fault with Δ–connected CTs on the high side, and the connection is more like that normally used on the three-phase transformer. It should be noted that the high-side CT in Figure 18 should not be used without the CTs in the tertiary. If connected in Y, the differential could operate for an external ground fault without the tertiary CTs to balance it. While other relays, such as fault-pressure, would probably detect these internal faults, the differential relay should be connected so as to operate for all faults internal to the protected transformer.

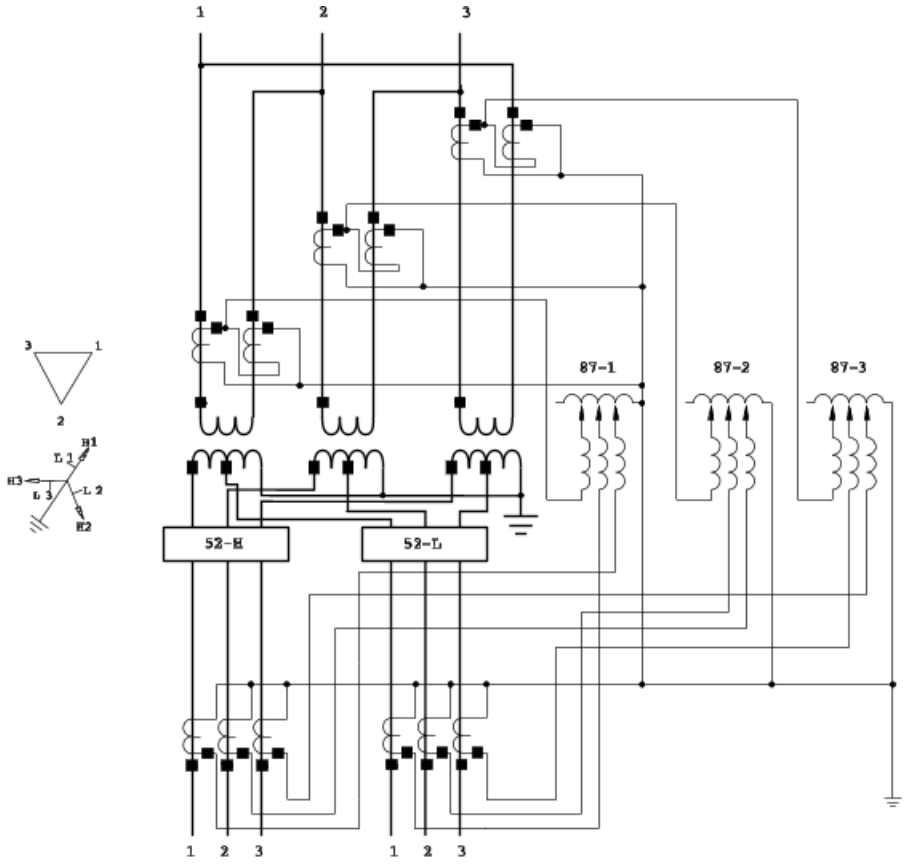

NOTE—This scheme requires additional relaying to provide protection on the tertiary makeup bus.

Figure 18—Differential protection of a bank of three single-phase autotransformers with a Δ tertiary and two CTs on each phase of tertiary

12.7 Differential protection of single-phase transformers in a three-phase bank with a spare transformer

With the increase in use of single-phase transformers in three-phase banks with spare transformers, the question frequently arises of how to best include the spare in a transformer differential scheme. Differential relay connections are dependent to some extent on transformer connections, location of CTs, and whether the spare power transformer will be energized all the time.

If the differential zone extends to circuit breakers on both sides of a transformer, then changing the CT secondary circuits is not required to place the spare transformer in service. However, if the spare transformer is to remain energized all the time, consideration should be given on how to protect the spare when not in use.

Copyright © 2000 IEEE. All rights reserved.
Copyright The Institute of Electrical and Electronics Engineers, Inc.
Provided by IHS under license with IEEE
No reproduction or networking permitted without license from IHS
Not for Resale

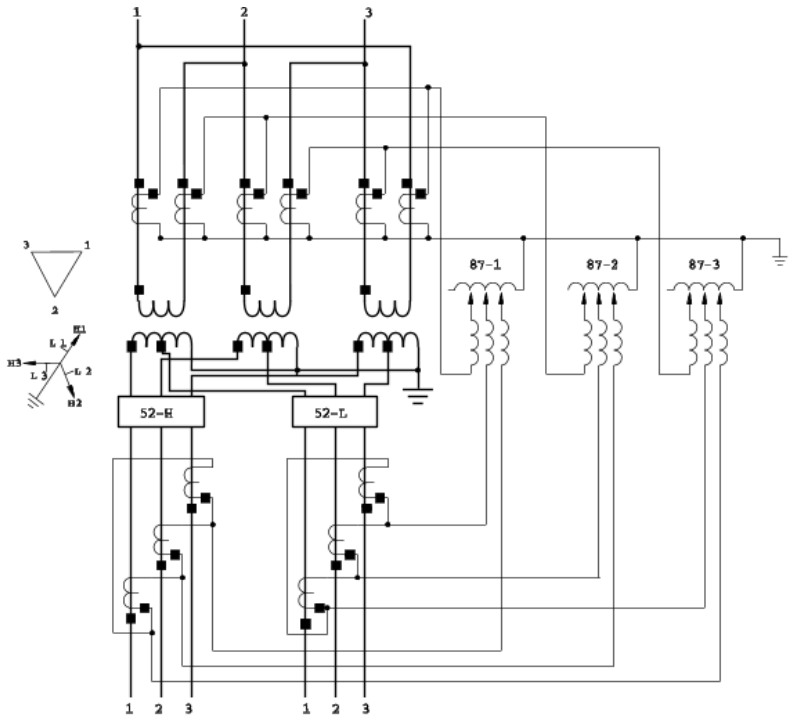

NOTE—This scheme requires additional relaying to provide protection on the tertiary makeup bus.

Figure 19—Alternative differential protection of a bank of three single-phase autotransformers with a Δ tertiary

When the transformer bank differential is used to protect the spare transformer, the result is not always as sensitive to protection of the spare as of the transformers in service.

If bushing CTs are used on both sides of the transformer bank, a separate relay for the spare could be used to ensure that it is put in service rapidly. This is true whether or not it will remain energized. It will provide an energized spare with adequate protection. To connect a differential relay for three-phase and single-phase transformers, see 12.5.

The most difficult situation to handle is that in which CTs on one side of a transformer bank are located in a circuit breaker, and those on the other side are in the transformer. Unfortunately, this is a common occurrence. In such cases, CT secondary circuits have to be switched or rewired to place the spare power transformer in service.

With any of the above combinations of transformer connections, it is possible to switch or rewire the CT secondaries. However, switching CT secondary circuits is not recommended as a good practice without a thorough analysis of the switching device and the risks of an open CT connection during the switching or as a result of a defective switching contact.

13.Other considerations

There are several conditions that can occur on a power system that can adversely affect power transformers, and these conditions are not generally covered by the transformer protection. The conditions discussed here are those in which a power transformer could be subjected to excessive nonfundamental frequency currents.

--`,,`-`-`,,`,,`,`,,`---
Copyright © 2000 IEEE. All rights reserved.

Copyright The Institute of Electrical and Electronics Engineers, Inc.
Provided by IHS under license with IEEE
No reproduction or networking permitted without license from IHS
Not for Resale

The imposition of direct current (dc) into the power transformer can occur from several sources including geomagnetic storms and cathodic protection systems. If sufficient dc is present in a winding of a power transformer, the core will saturate. The amount of dc required to saturate the core will vary with design but could be as low as 0.3 A in a winding or 0.9 A in the neutral of a three-phase transformer. Magnetizing current of a transformer in saturation will consist of a series of unidirectional current pulses that are a measure of the average value of applied dc.

DC can be introduced into the power transformer windings in several ways. Three sources of sufficient dc to harm transformers and power systems are: geomagnetic storms (see IEEE working group report [B27]), cathodic protection systems, and dc- operated traction systems. Documented cases show that the dc measured in the neutral of a three-phase transformer due to a geomagnetic storm has been as high as 83 A and the dc measured in the neutral of a generator step-up transformer at a gas turbine plant due to cathodic protection has been as high as 37 A.

The effects of dc saturation of a power transformer are increased harmonic current flow in the transformer as well as in the power system and increased heating, sound level, and vibration of the transformer. If the saturation is severe enough, there is potential for damage to the transformer from additional heating of the windings, leads, and structural components, and insulation deterioration from the increased vibration. This flow of harmonic currents in the system may cause additional heating of rotors in nearby generators and motors, which could damage these devices or cause operation of negative sequence protection.

If there is any possibility of the presence of dc in the power transformer and suspicion of failures being initiated by these currents, it may be wise to monitor and alarm for excessive levels.

Transformers supplying static loads, such as adjustable speed drives, and inverter loads can be subjected to high harmonic currents. These harmonic currents can limit the safe loading of a transformer to a level that is significantly less than the transformer rating. Under these conditions, the transformer should be derated according to IEEE Std C57.110-1986, or as recommended by the manufacturer.

14.Device numbers

Device numbers used in this guide are outlined in IEEE Std C37.2-1996.

24	V/Hz relay
26	Thermal device
49	Thermal relay
50N	Instantaneous neutral overcurrent relay
51	AC time overcurrent relay
51G	AC time overcurrent relay
51N	AC time neutral overcurrent relay
51NB	AC time neutral overcurrent relay, backup
51NT	AC time neutral overcurrent relay, torque controlled
52	AC circuit breaker
59	Overvoltage relay
60	Voltage or current balance relay
63	Pressure switch or relay
67	AC directional overcurrent relay
67G	AC directional overcurrent relay, neutral
86	Lockout relay
87	Differential relay
87G	Ground differential relay

Copyright © 2000 IEEE. All rights reserved.
Copyright The Institute of Electrical and Electronics Engineers, Inc.
Provided by IHS under license with IEEE
No reproduction or networking permitted without license from IHS
Not for Resale

Annex A

(informative)

Application of the transformer through-fault current duration guide to the protection of power transformers

Overcurrent protective devices such as relays and fuses have well-defined operating characteristics that relate fault-current magnitude to operating time. It is desirable that the characteristic curves for these devices be coordinated with comparable curves, applicable to transformers (see IEEE Std C57.109-1993) that reflect their through-fault withstand capability. Such curves for Category I, II, III, and IV transformers (as described in IEEE C57.12.00-2000) are presented in this annex as through-fault protection curves. These curves apply to transformers designed to IEEE Std C57.12.00-2000. Based on the historical evolution of the short-circuit withstand requirements, these curves should be applicable to transformers built beginning in the early 1970s. However, as a precaution, it is recommended that the manufacturer be consulted for confirmation of this, especially for transformers built during the early 1970s. For transformers built prior to the 1970s, the manufacturer must be consulted for the short-circuit withstand capabilities. It should also be noted that the coordination curves shown are curves of currents that are in any specific winding of a transformer. The protection for overcurrent of that winding may be applied on a leg of the transformer that may see a different magnitude of current. The protection should be adjusted so that the detecting protective device will operate at or less than the suggested levels of current in each transformer winding.

It is widely recognized that damage to transformers from through-faults is the result of thermal and mechanical effects. The latter have recently gained increased recognition as a major concern of transformer failure. Though the temperature rise associated with high magnitude through-faults is typically quite acceptable, the mechanical effects are intolerable if such faults are permitted to occur with any regularity. This results from the cumulative nature of some of the mechanical effects, particularly insulation compression, insulation wear, and friction-induced displacement. The damage that occurs as a result of these cumulative effects is a function of not only the magnitude and duration of through-faults, but also the total number of such faults.

The through-fault protection curves presented in this annex take into consideration that the transformer damage is cumulative, and the number of through-faults to which a transformer can be exposed is inherently different for different transformer applications. For example, transformers with secondary-side conductors enclosed in conduit or isolated in some other fashion, such as those typically found in industrial, commercial, and institutional power systems, experience an extremely low incidence of through-faults. In contrast, transformers with secondary-side overhead lines, such as those found in utility distribution substations, have a relatively high incidence of through-faults, and the use of reclosers or automatic reclosing circuit breakers may subject the transformer to repeated current surges from each fault. For a given transformer in these two different applications, a different through-fault protection curve should apply, depending on the type of application. For applications in which faults occur infrequently, the through-fault protection curve should reflect primarily thermal damage considerations, since cumulative mechanical damage effects of through-faults will not be a problem. For applications in which faults occur frequently, the through-fault protection curve should reflect the fact that the transformer will be subjected to thermal and cumulative mechanical damage effects of through-faults.

In using the through-fault protection curves to select the time-current characteristics of protective devices, the protection engineer should take into account not only the inherent level of through-fault incidence but also the location of each protective device and its role in providing transformer protection. Substation transformers with secondary-side overhead lines have a relatively high incidence of through-faults. The secondary-side feeder protective equipment is the first line of defense against through-faults, and its time-current characteristics should be selected by reference to the frequent-fault-incidence protection curve. More specifically, the time-current characteristics of feeder protective devices should be below and to the

Copyright © 2000 IEEE. All rights reserved.

Copyright The Institute of Electrical and Electronics Engineers, Inc.
Provided by IHS under license with IEEE
No reproduction or networking permitted without license from IHS
Not for Resale

left of the appropriate frequent-fault-incidence protection curve. Main secondary-side protective devices (if applicable) and primary-side protective devices typically operate to protect for through-faults only in the rare event of a fault between the transformer and the feeder protective devices, or in the equally rare event that a feeder protective device fails to operate or operates too slowly because of an incorrect (higher) rating or setting. The time-current characteristics of these devices should be selected by reference to the infrequent-fault-incidence protection curve. In addition, these time-current characteristics should be selected to achieve the desired coordination among the various protective devices.

In contrast, transformers with protected secondary conductors (for example, cable, bus duct, or switchgear), experience an extremely low incidence of through-faults. Hence, the feeder protective devices may be selected by reference to the infrequent-fault-incidence protection curve. The main secondary-side protective device (if applicable) and the primary-side protective device should also be selected by reference to the infrequent-fault-incidence protection curve. Again, these time-current characteristics should also be selected to achieve the desired coordination among the various protective devices.

For Category I transformers (5–500 kVA single-phase, 15–500 kVA three-phase), a single through-fault protection curve applies (see Figure A.1). This curve may be used for selecting protective device time-current characteristics for all applications regardless of the anticipated level of fault incidence.

For Category II transformers (501–1667 kVA single-phase, 501–5000 kVA three-phase), two through-fault protection curves apply (see Figure A.2).

The left-hand curve reflects both thermal and mechanical damage considerations and may be used for selecting feeder protective device time-current characteristics for frequent-fault-incidence applications. It depends on the impedance of the transformer for fault current above 70% of maximum possible and is based on the I^2t of the worst-case mechanical duty (maximum fault current for 2 s).

The right-hand curve reflects primarily thermal damage considerations and may be used for selecting feeder protective device time-current characteristics for infrequent-fault-incidence applications. This curve may also be used for selecting main secondary-side protective device (if applicable) and a primary-side protective device time-current characteristics for all applications, regardless of the anticipated level of fault incidence.

For Category III transformers (1668–10 000 kVA single-phase, 5001–30 000 kVA three-phase), two through-fault protection curves apply (see Figure A.3).

a) The left-hand curve reflects both thermal and mechanical damage considerations and may be used for selecting feeder protective device time-current characteristics for frequent-fault-incidence applications. It depends on the impedance of the transformer for fault current above 50% of maximum possible and is keyed to the I^2t of the worst-case mechanical duty (maximum fault current for 2 s).

b) The right-hand curve reflects primarily thermal damage considerations and may be used for selecting feeder protective device time-current characteristics for infrequent-fault-incidence applications. This curve may also be used for selecting main secondary-side protective device (if applicable) and primary-side protective device time-current characteristics for all applications-regardless of the anticipated level of fault incidence.

For Category IV transformers (above 10 000 kVA single-phase, and above 30 000 kVA three-phase), a single through-fault protection curve applies (see Figure A.4). This curve reflects both thermal and mechanical damage considerations and may be used for selecting protective device time-current characteristics for all applications, regardless of the anticipated level of fault incidence. It depends on the impedance of the transformer for fault current above 50% of maximum possible and is keyed to the I^2t of the worst-case mechanical duty (maximum fault current for 2 s).

Copyright © 2000 IEEE. All rights reserved.

Copyright The Institute of Electrical and Electronics Engineers, Inc.
Provided by IHS under license with IEEE
No reproduction or networking permitted without license from IHS
Not for Resale

The delineation of infrequent- vs. frequent-fault-incidence applications for Category II and III transformers can be related to the zone or location of the fault (see Figure A.5).

For convenience, the through-fault protection curves for Category I, II, III, and IV transformers are summarized in Table A.1.

Fuse or overcurrent relay coordination with the through-fault protection curves, or both, is shown in Figure A6–Figure A8.

These should be self-explanatory. A primary-side fuse or overcurrent relay on a Δ-primary, Y-grounded secondary transformer will detect only 57.7% of the Y-side phase-to-ground fault current. The applicable primary side curves are shifted to the right on the phase-to-ground fault figures to properly show coordination at the indicated low-side current values.

A secondary phase-to-phase fault on a Δ-primary, Y-secondary transformer will result in secondary currents that are 86.7% of the three-phase fault value. However, the high-side phase currents will be 100% of the three-phase fault current in the high phase and 50% of the three phase fault current in the other two phases. The applicable primary-side curves are shifted to the left on the phase-to-phase fault figures to properly show coordination for the high-side high phase current at the indicated low-side current values.

An example of the application of the new thermal/mechanical limit curves to a three-winding autotransformer (Y-Y-Δ) with overcurrent relays on the 30 MVA tertiary follows. The example uses Table A.2.

The coordination steps are as follows:

a) Select the category from the *minimum* nameplate rating of the *principal* winding (75 000 kVA is Category IV).

b) Select the impedance to use so as to plot the Category IV curves (Z 132 – 13.2 = 7.94% at 30 000 kVA).

c) Calculate "constant" $K = I^2t = (100/7.94)^2\ (2) = 317.24$ at 2 s.

d) Times normal base current at 2 s >> 12.59.

e) The 50% point is $(317.24)/(12.59/2)^2$ >> 8 s.

The coordination of the overcurrent relays for this example is shown in Figure A.15.

Copyright © 2000 IEEE. All rights reserved.

Copyright The Institute of Electrical and Electronics Engineers, Inc.
Provided by IHS under license with IEEE
No reproduction or networking permitted without license from IHS
Not for Resale

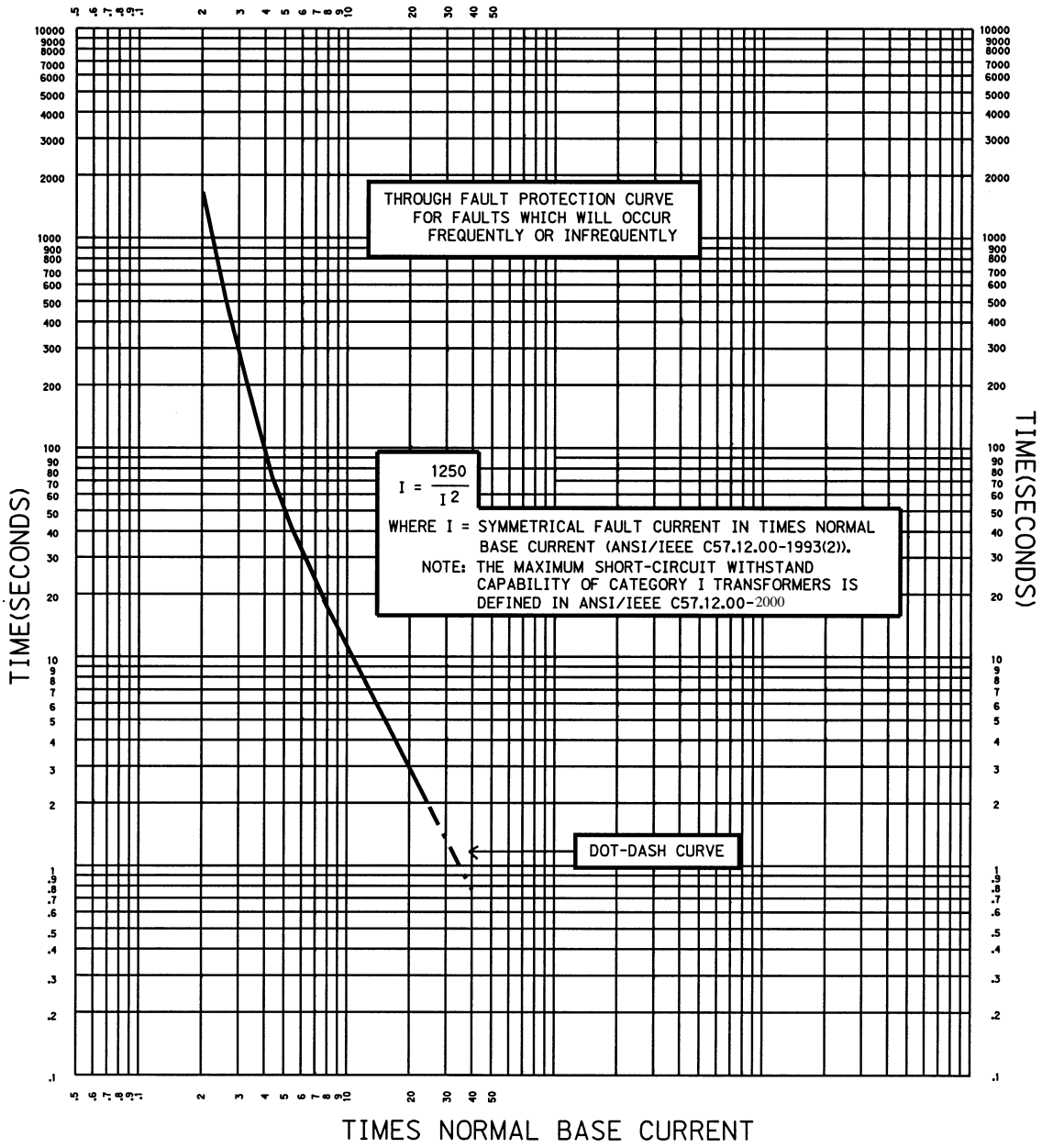

Figure A.1—Category I transformers:
5–500 kVA single-phase;
15–500 kVA three-phase

Copyright © 2000 IEEE. All rights reserved.
Copyright The Institute of Electrical and Electronics Engineers, Inc.
Provided by IHS under license with IEEE
No reproduction or networking permitted without license from IHS
Not for Resale

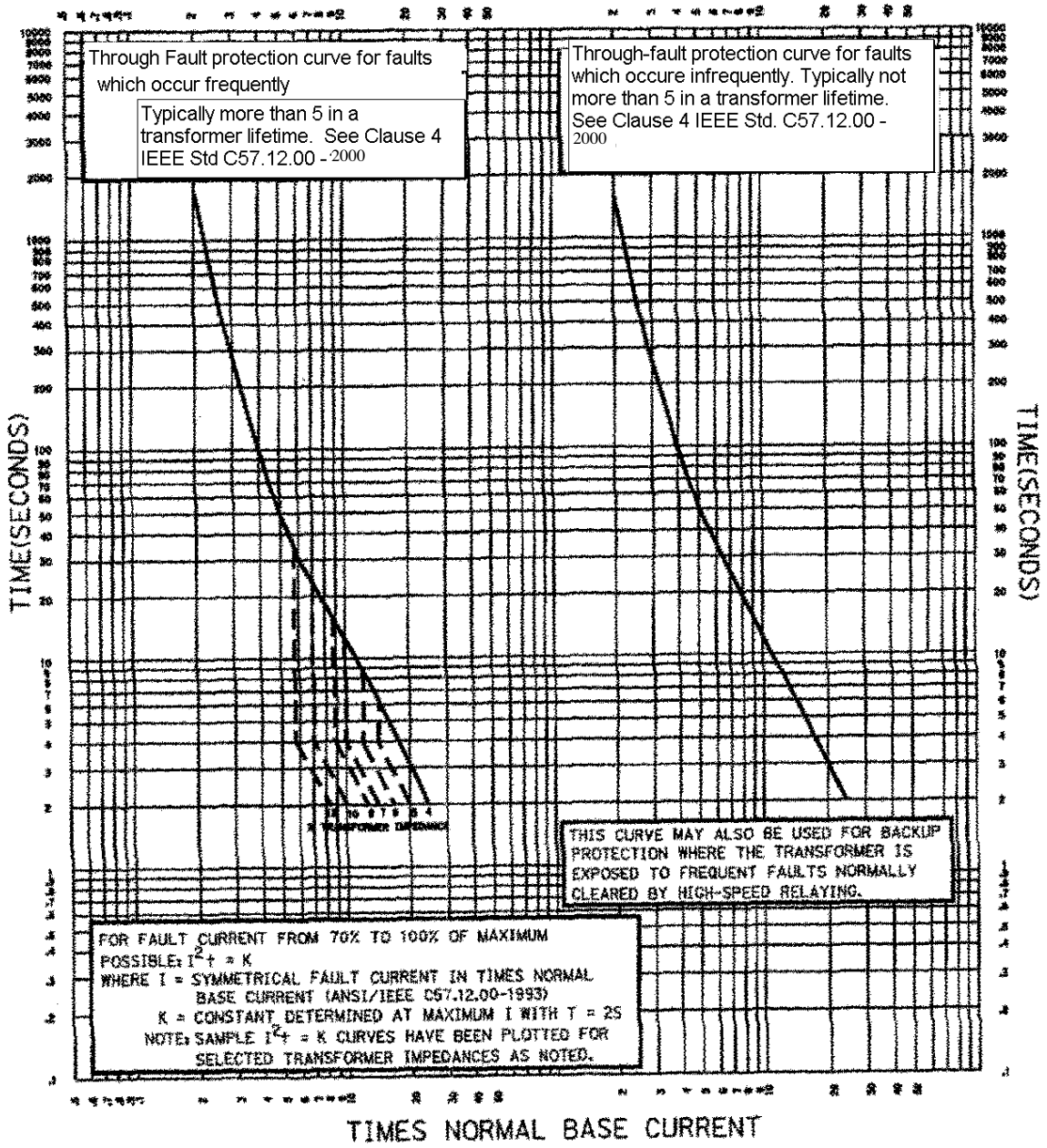

Figure A.2—Category II transformers:
501–1667 kVA single-phase;
501–5000 kVA three-phase

Copyright © 2000 IEEE. All rights reserved.

Copyright The Institute of Electrical and Electronics Engineers, Inc.
Provided by IHS under license with IEEE
No reproduction or networking permitted without license from IHS
Not for Resale

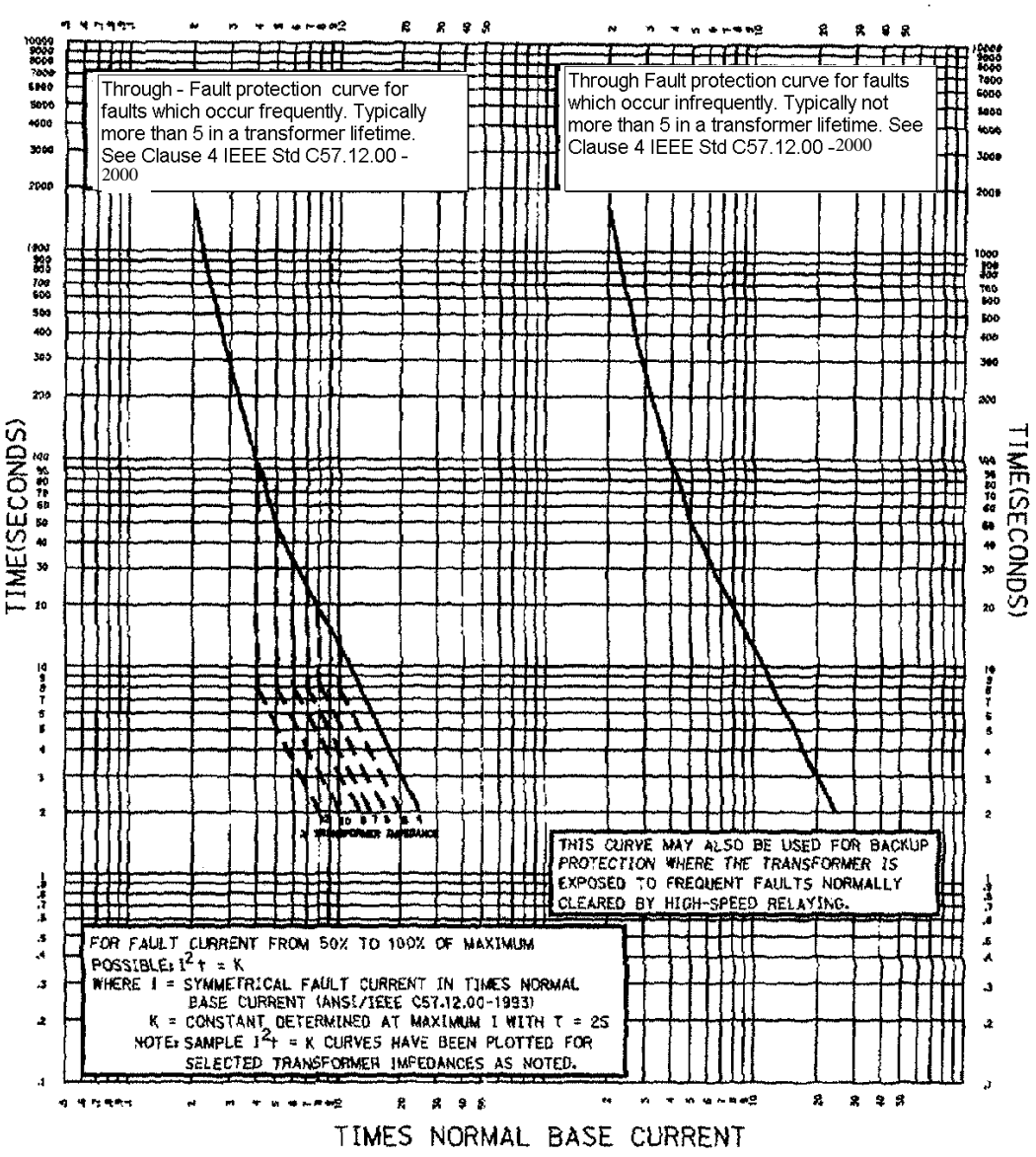

Figure A.3—Category III transformers: 1668–10 000 kVA single-phase; 5001–30 000 kVA three-phase

Copyright © 2000 IEEE. All rights reserved.
Copyright The Institute of Electrical and Electronics Engineers, Inc.
Provided by IHS under license with IEEE
No reproduction or networking permitted without license from IHS
Not for Resale

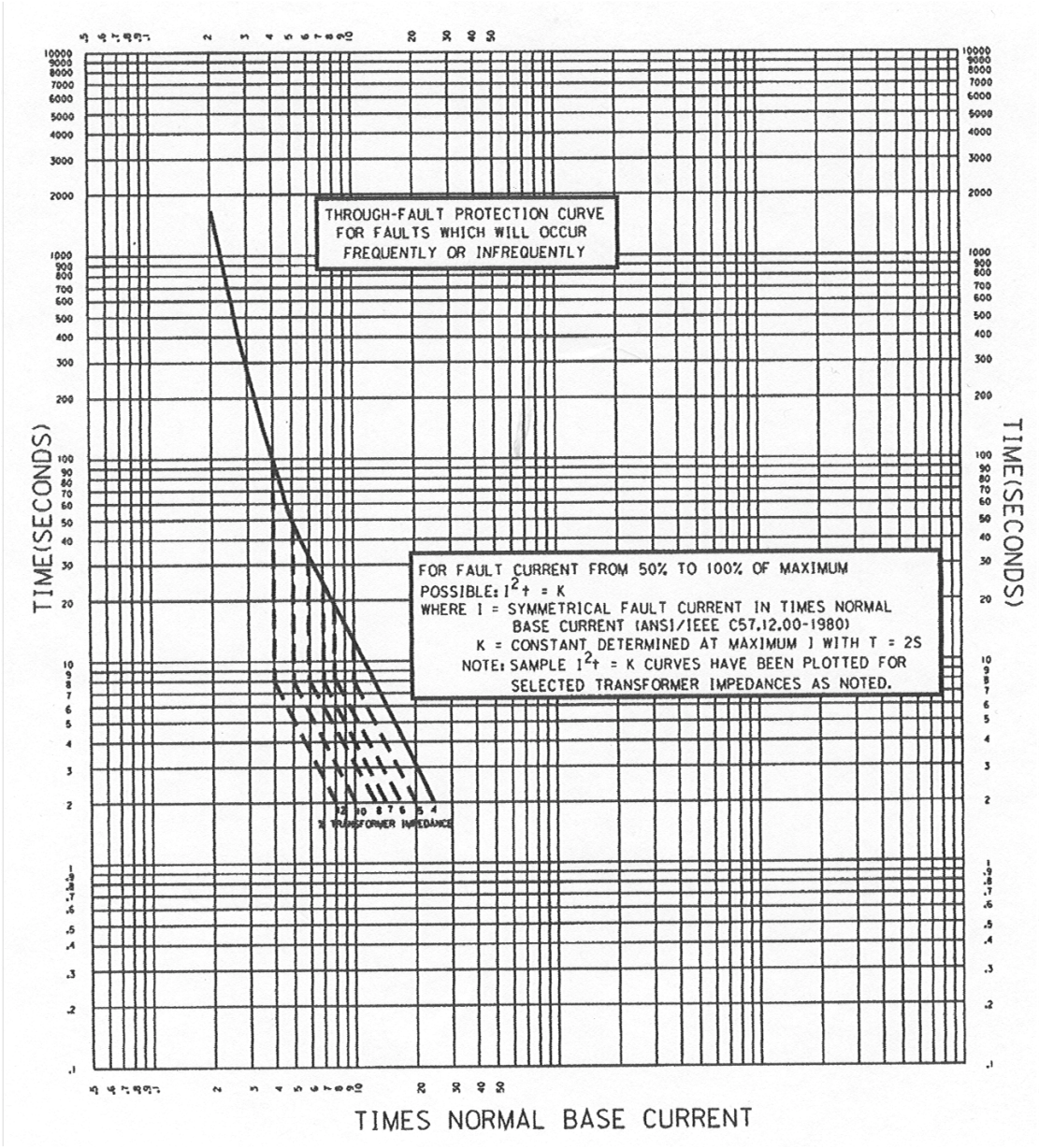

Figure A.4—Category IV transformers:
above 10 000 kVA single-phase;
above 30 000 kVA three-phase

Copyright © 2000 IEEE. All rights reserved.

Copyright The Institute of Electrical and Electronics Engineers, Inc.
Provided by IHS under license with IEEE
No reproduction or networking permitted without license from IHS
Not for Resale

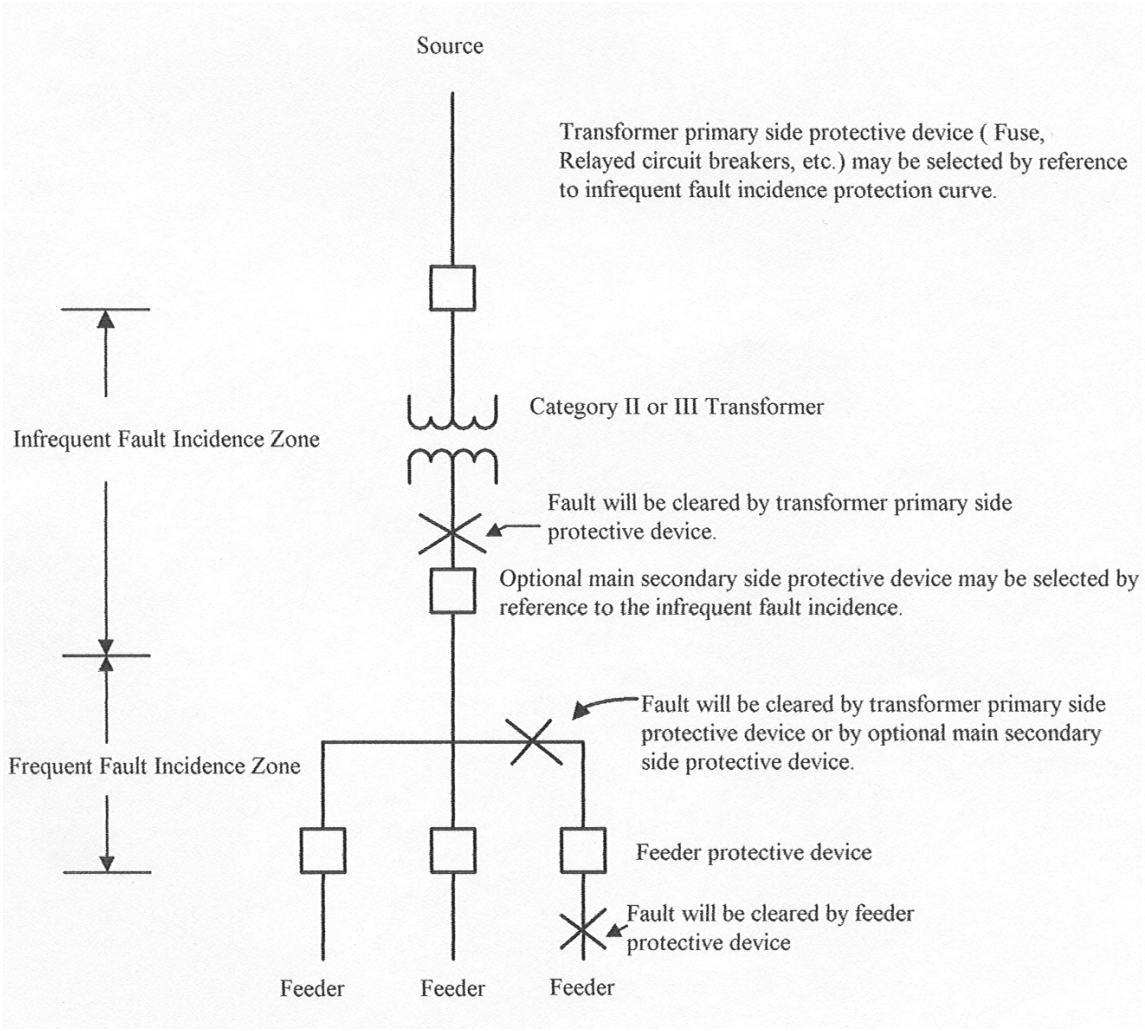

Figure A.5—Infrequent- and frequent-fault incidence zones for Category II and Category III transformers

Copyright © 2000 IEEE. All rights reserved.
Copyright The Institute of Electrical and Electronics Engineers, Inc.
Provided by IHS under license with IEEE
No reproduction or networking permitted without license from IHS
Not for Resale

Table A.1—Summary of through-fault protection curves; minimum nameplate (kVA) (principal winding)

Category	Single phase (kVA)	Three phase (kVA)	Through-fault protection curve[a]
I	5–500	15–500	Figure A.1
II	501–1667	501–5000	Figure A.2
III	1668–10000	5001–30 000	Figure A.3
IV	Above 10000	Above 30 000	Figure A.4

[a]The times normal base current scale in Figures A.1—A.4 relates to minimum nameplate kVA. Low values of 3.5 or less times normal base current may result from overloads rather than faults, and for such cases, loading guides may indicate allowable time durations different from those given in Figures A.1—A.4 (see IEEE Std C57.91-1995).

Table A.2—An application example of the thermal mechanical limit curves for a three-winding transformer

60 Hz, Class OA/FA/FOA, three-phase voltage rating: 132 000 GR Y/76 200–66 000 GR Y/38 100–13 200			
H winding	**X winding (MVA)**	**Y winding (MVA)**	**Cooling**
MVA rating 75 (output)	60	30	Continuous 55 °C rise, self-cooled
MVA rating 100 (output)	80	40	Continuous 55 °C rise, forced-air cooled
MVA rating 125 (output)	100	50	Continuous 55 °C rise, forced-oil and forced-air cooled
MVA rating 140 (output)	112	56	Continuous 65 °C rise, forced-oil and forced-air cooled

NOTES:

1—Impedance volts 5.00% 132 000 GR Y–66 000GR Y V at 60 MVA.

2—Impedance volts 7.94% 132 000 GR Y–13 200 V at 30 MVA.

3—Impedance volts 11.43% 66 000 GR Y–13 200 V at 30 MVA

Copyright © 2000 IEEE. All rights reserved.

Copyright The Institute of Electrical and Electronics Engineers, Inc.
Provided by IHS under license with IEEE
No reproduction or networking permitted without license from IHS
Not for Resale

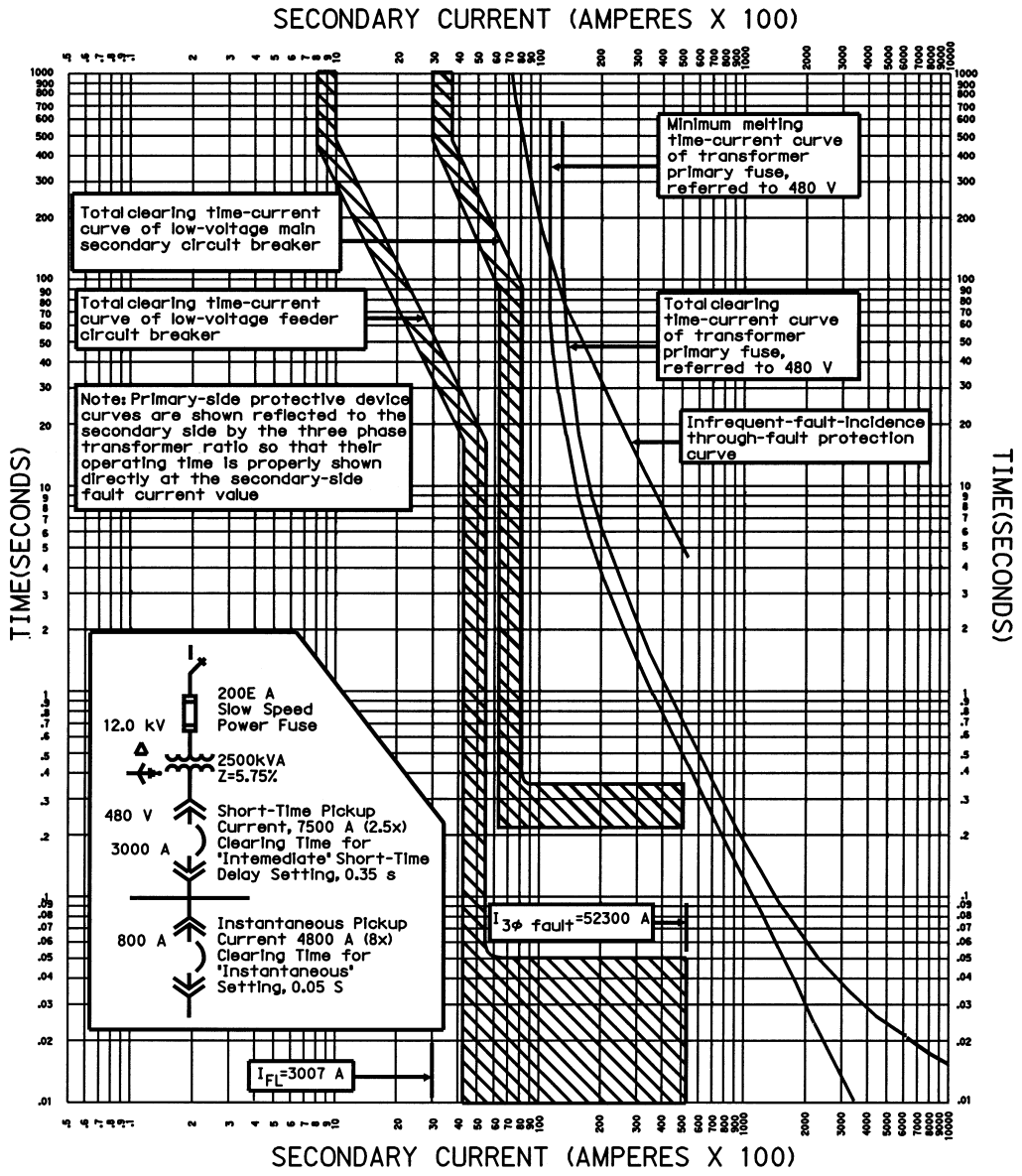

Figure A.6—Protection of Category II transformer serving protected secondary-side conductors (e.g., cable, bus duct, or switchgear) for a three-phase secondary-side fault

Copyright © 2000 IEEE. All rights reserved.
Copyright The Institute of Electrical and Electronics Engineers, Inc.
Provided by IHS under license with IEEE
No reproduction or networking permitted without license from IHS
Not for Resale

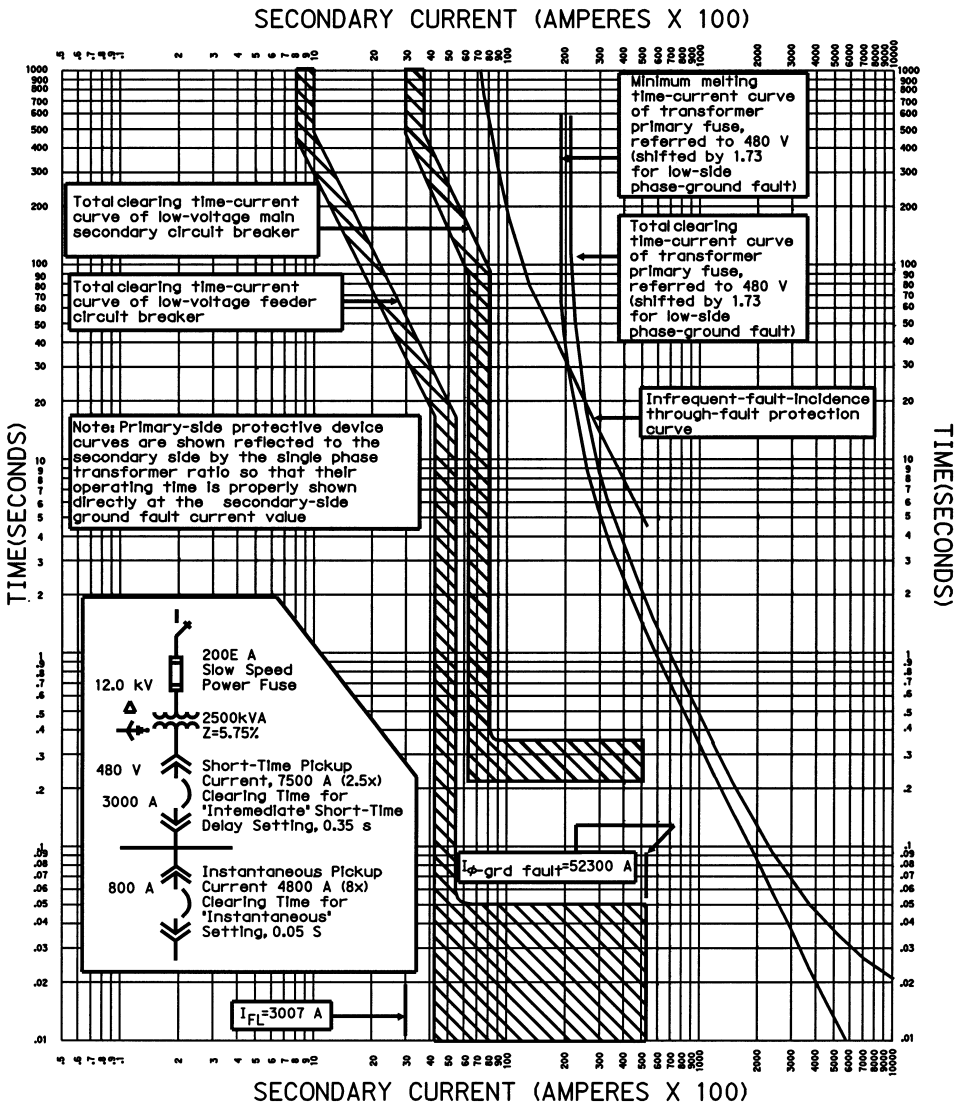

Figure A.7—Protection of a Category II transformer serving protected secondary-side conductors (e.g., cable, bus duct, or switchgear) for three-phase secondary-side fault

Copyright © 2000 IEEE. All rights reserved.

Copyright The Institute of Electrical and Electronics Engineers, Inc.
Provided by IHS under license with IEEE
No reproduction or networking permitted without license from IHS
Not for Resale

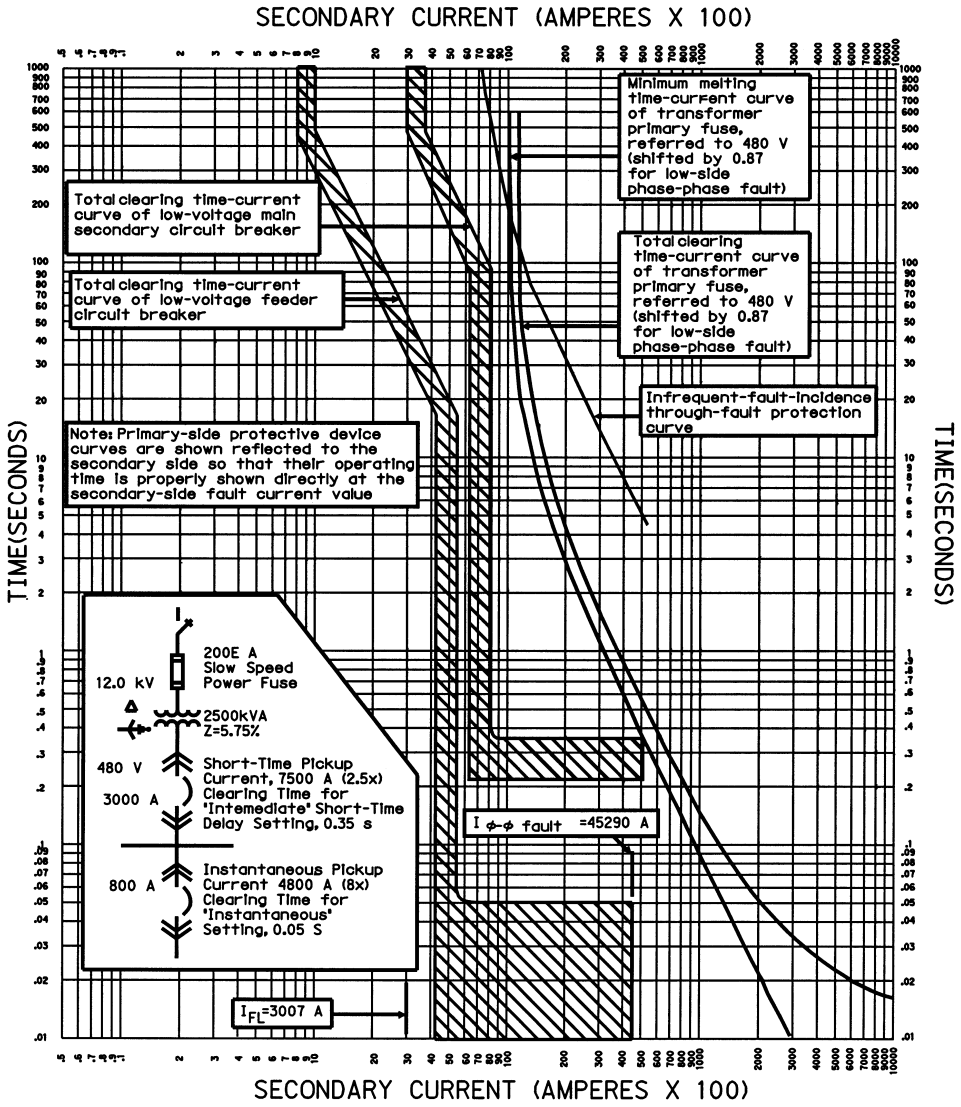

Figure A.8—Protection of a Category II transformer serving protected secondary-side conductors (e.g., cable, bus duct, or switchgear) for phase-to-ground secondary-side fault

Copyright © 2000 IEEE. All rights reserved.
Copyright The Institute of Electrical and Electronics Engineers, Inc.
Provided by IHS under license with IEEE
No reproduction or networking permitted without license from IHS
Not for Resale

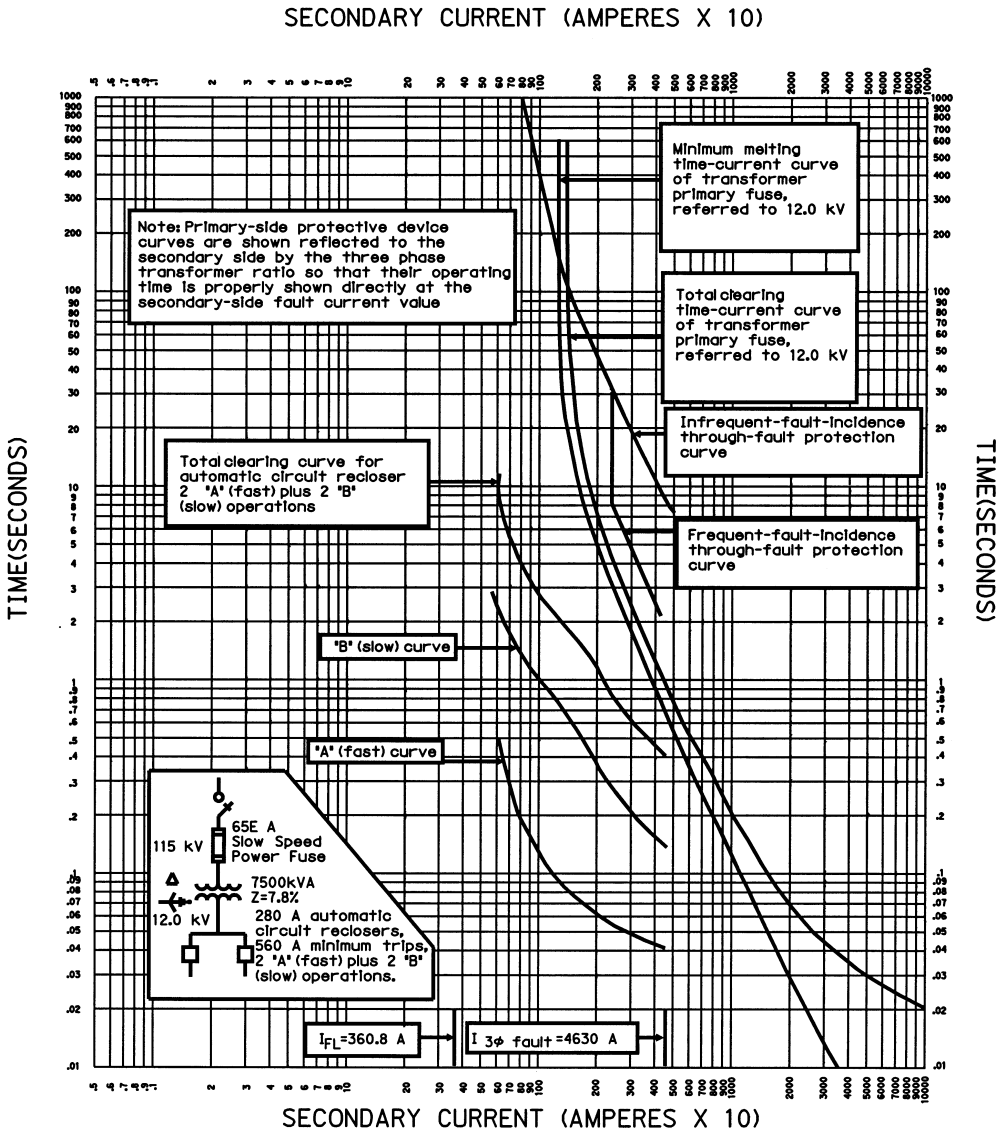

Figure A.9—Protection of a Category III transformer serving secondary-side overhead lines, for three-phase secondary-side fault

Copyright © 2000 IEEE. All rights reserved.

Copyright The Institute of Electrical and Electronics Engineers, Inc.
Provided by IHS under license with IEEE
No reproduction or networking permitted without license from IHS
Not for Resale

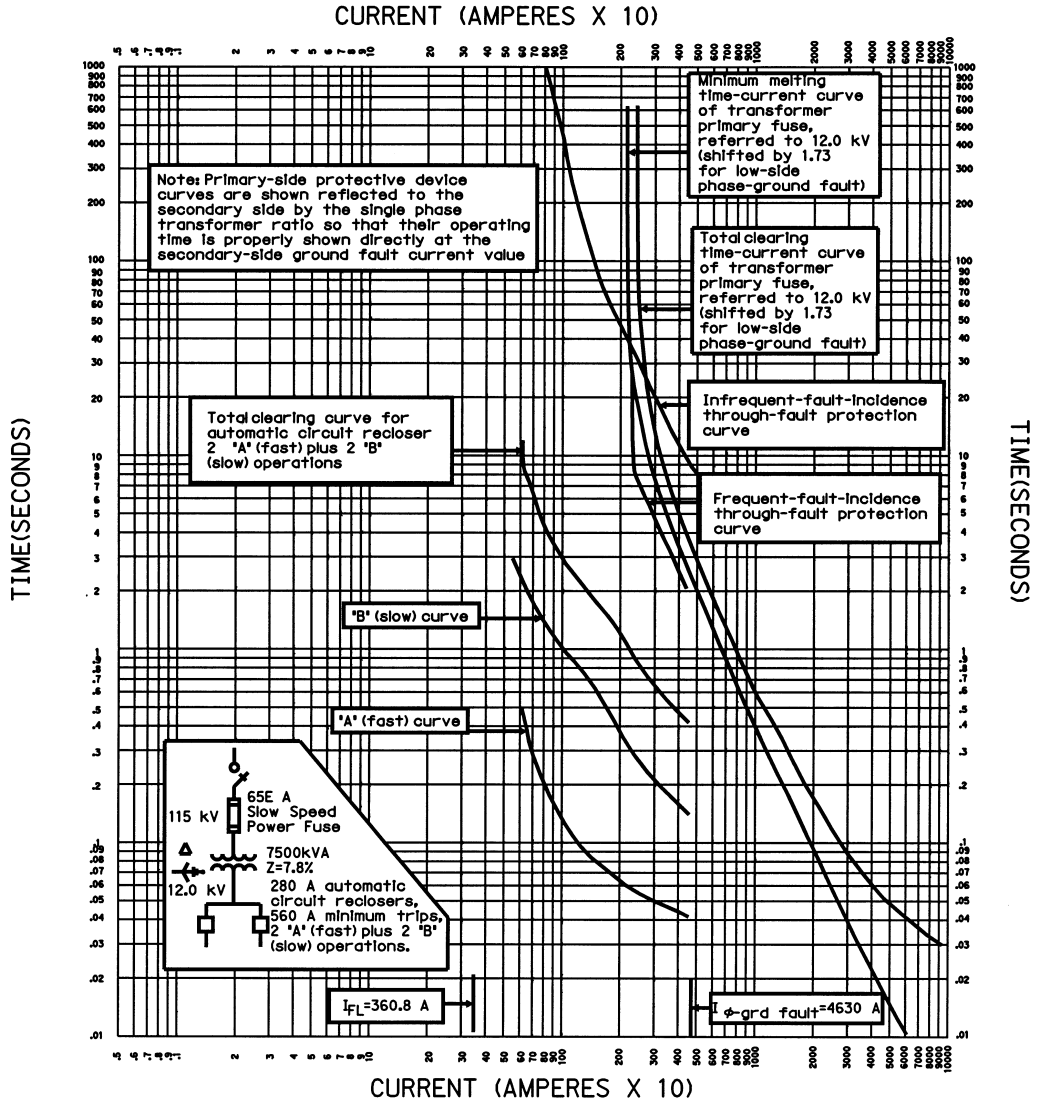

Figure A.10—Protection of a Category III transformer serving secondary-side overhead lines, for phase-to-ground secondary-side fault

Copyright © 2000 IEEE. All rights reserved.
Copyright The Institute of Electrical and Electronics Engineers, Inc.
Provided by IHS under license with IEEE
No reproduction or networking permitted without license from IHS
Not for Resale

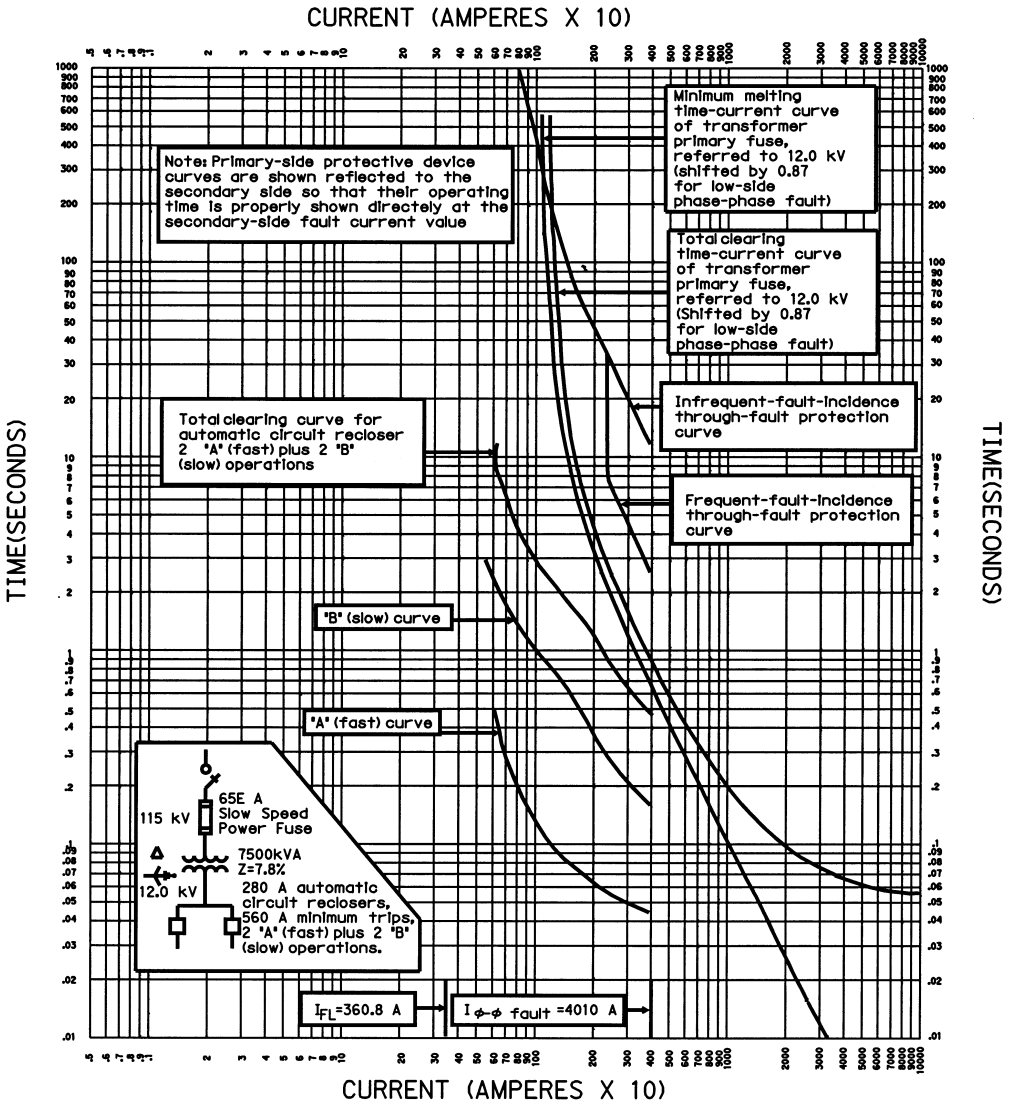

Figure A.11—Protection of a Category III transformer serving secondary-side overhead lines, for phase-to-phase secondary-side fault

Copyright © 2000 IEEE. All rights reserved.

Copyright The Institute of Electrical and Electronics Engineers, Inc.
Provided by IHS under license with IEEE
No reproduction or networking permitted without license from IHS
Not for Resale

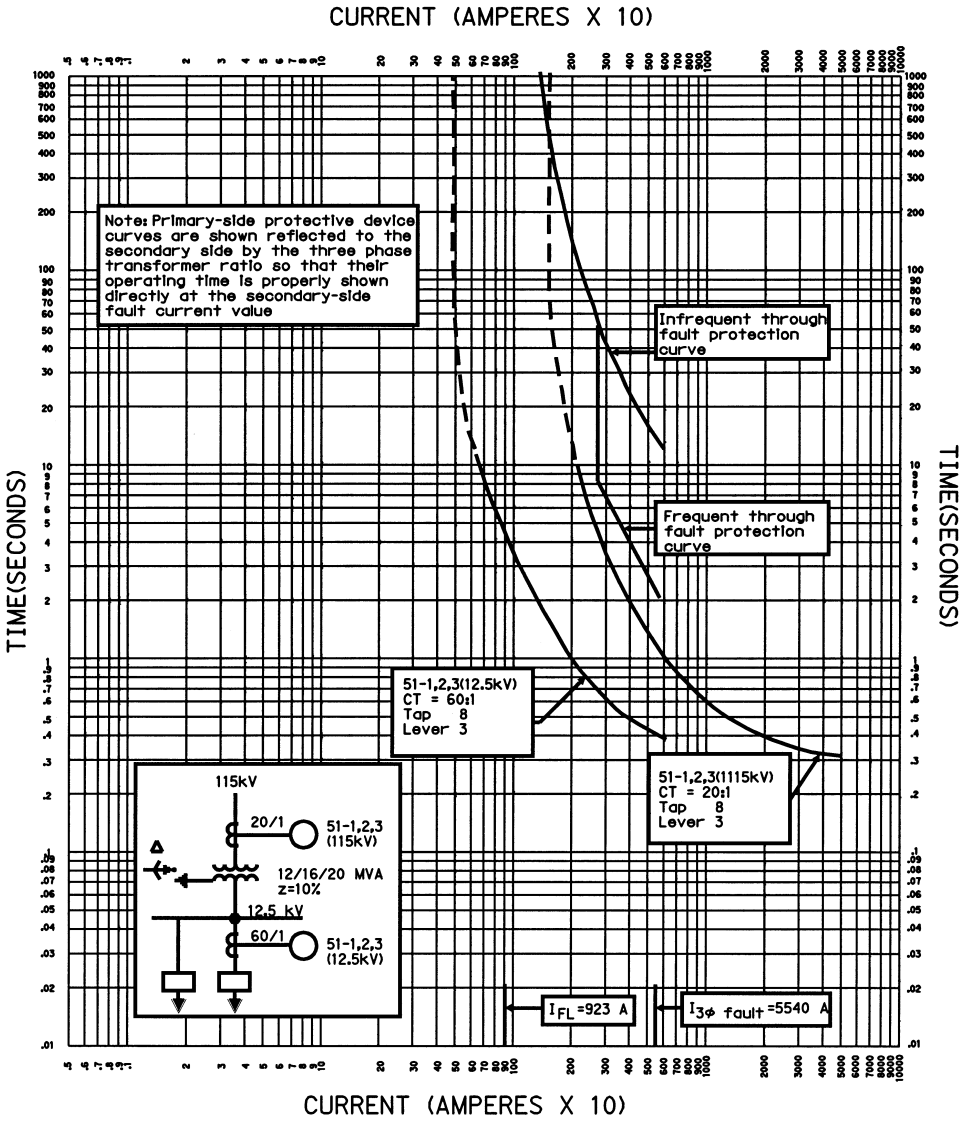

Figure A.12—Protection of Category III transformer three-phase secondary fault

Copyright © 2000 IEEE. All rights reserved.
Copyright The Institute of Electrical and Electronics Engineers, Inc.
Provided by IHS under license with IEEE
No reproduction or networking permitted without license from IHS
Not for Resale

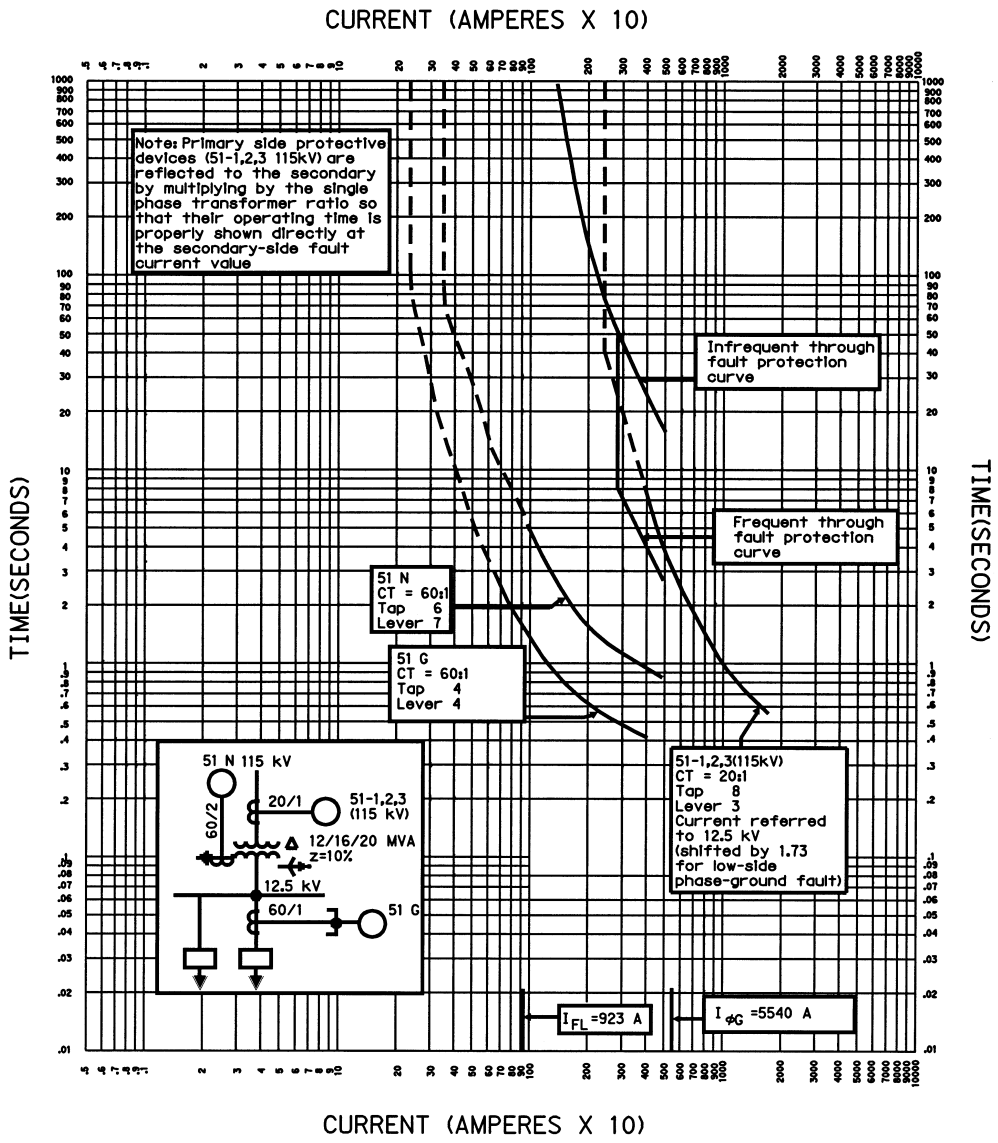

Figure A.13—Protection of Category III transformer phase-ground secondary fault

Copyright © 2000 IEEE. All rights reserved.

Copyright The Institute of Electrical and Electronics Engineers, Inc.
Provided by IHS under license with IEEE
No reproduction or networking permitted without license from IHS
Not for Resale

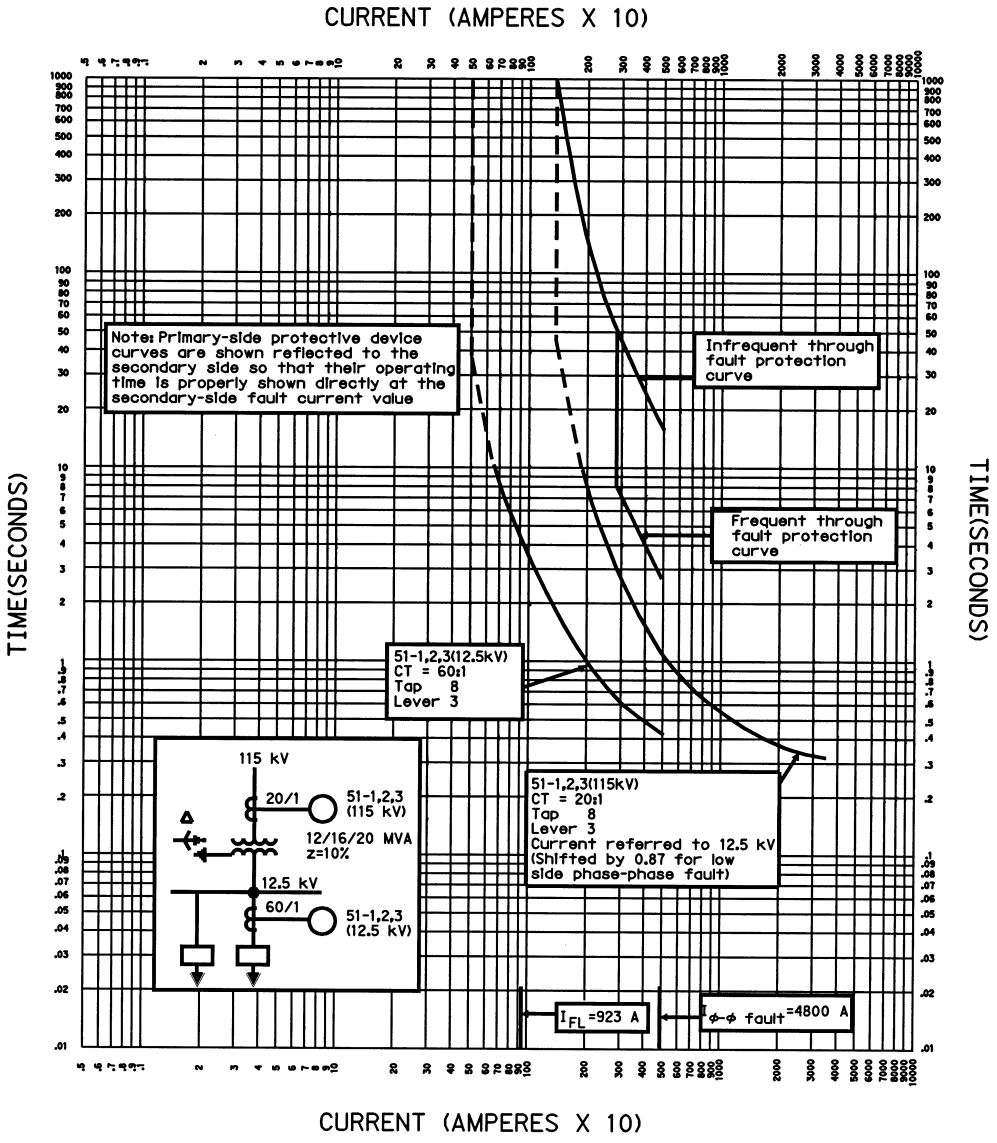

Figure A.14—Protection of Category III transformer phase-phase secondary fault

Copyright © 2000 IEEE. All rights reserved.
Copyright The Institute of Electrical and Electronics Engineers, Inc.
Provided by IHS under license with IEEE
No reproduction or networking permitted without license from IHS
Not for Resale

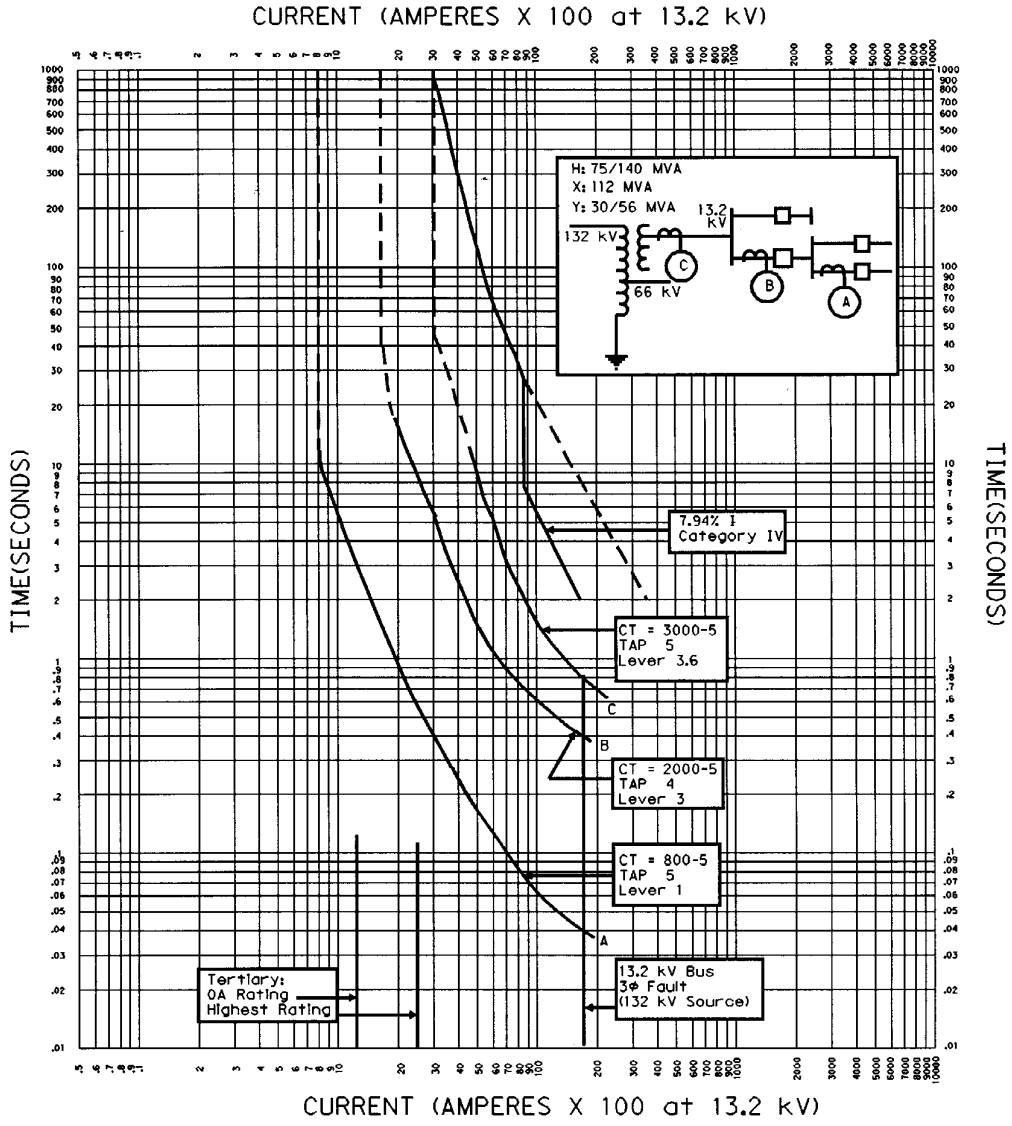

Figure A.15—Coordination of tertiary overcurrent relays for large autotransformer

Copyright © 2000 IEEE. All rights reserved.

Copyright The Institute of Electrical and Electronics Engineers, Inc.
Provided by IHS under license with IEEE
No reproduction or networking permitted without license from IHS
Not for Resale

Annex B

(informative)

Bibliography

B.1 General information

[B1] ASC C2-1997, National Electrical Safety Code.

[B2] Bean, R. L., Chackan, N., Moore, H. R., and Wentz, E. C., *Transformers*. New York: McGraw-Hill, 1959.

[B3] Blume, L. F., Boyajian, A., Camilli, G., Montsinger, V. M., Lennox, T. C., and Minneci, S., *Transformer Engineering*. New York: John Wiley, 1951

[B4] Dutton, J. C., and McNutt, W. J., "Transformer Standards—Status and Trends," *IEEE Transactions on Industry Applications*, Vol. IA–16, no. 1, Jan./Feb. 1980, pp. 17–19.

[B5] Griffin, C. H., "Development and Application of Fault-Withstand Standards for Power Transformers," *IEEE Transactions on Power Apparatus and Systems*, Vol. PAS-104, no. 8, Aug. 1985, pp. 2177–2189.

[B6] Griffin, C. H., "Relay Protection of Generator Station Service Transformers," *IEEE Transactions on Power Apparatus and Systems*, Vol. PAS-101, no. 8, Aug. 1982, pp. 2780–2789.

[B7] Horowitz, S. H., ed., *Protective Relaying for Power Systems II*. IEEE Power Engineering Society.

[B8] IEC 60599: 1978, Mineral oil-impregnated electrical equipment in service—Guide to the interpretation of dissolved and free gases analysis.

[B9] IEEE Committee Report. "Transient Response of Current Transformers," IEEE Special Publication 76CH1130-4PWR.

[B10] IEEE Std C57.12.01-1998, IEEE Standard General Requirements for Dry-Type Distribution and Power Transformers Including Those with Solid Cast and/or Resin Encapsulated Windings.

[B11] IEEE Std C57.12.90-1999, IEEE Standard Test Code for Distribution, Power, and Regulating Transformers.

[B12] IEEE Std C57.12.91-1995, IEEE Standard for Dry-Type Distribution and Power Transformers.

[B13] IEEE Std C57.110-1998 IEEE Recommended Practice for Establishing Transformer Capability When Supplying Nonsinusoidal Load Currents.

[B14] IEEE Std 142-1991, IEEE Recommended Practice for Grounding of Industrial and Commercial Power Systems.

[B15] IEEE Std 242-1986, IEEE Recommended Practice for Protection and Coordination of Industrial and Commercial Power Systems (IEEE Buff Book).

Copyright © 2000 IEEE. All rights reserved.

Copyright The Institute of Electrical and Electronics Engineers, Inc.
Provided by IHS under license with IEEE
No reproduction or networking permitted without license from IHS Not for Resale

[B16] Khan, S., and Brown, R. W., "Planning and Protection Implications of Reduced Fault-Withstand Time of Power Transformers," *IEEE Transactions on Power Delivery*, Vol. PWRD-1, no. 4, Oct. 1986, pp. 60–67.

[B17] Lazar, I., "Transformer Protection and Relaying in Industrial Power Plants," *Power Engineering*, Vol. 83, no. 5, May 1979, pp. 56–61.

[B18] Lesher, R. L., Byerly, R. T., and Porter, J. W., "Sunburst—A Network of GIC Monitoring Systems," *IEEE Transactions on Power Delivery*, Paper 93, WM 064-6-PWRD, T-PWRD, Jan. 1994.

[B19] Lin, C. E., Cheng, C. L., Huang, C. L., and Yeh, J. C., "Investigation of Magnetizing Inrush Current in Transformers: Part II—Harmonic Analysis," *IEEE PES Winter Power Meeting*, New York, 92 WM 246-9 PWRD, 26–30 Jan 1992.

[B20] Mason, C. R., *The Art and Science of Protective Relaying*. New York: Wiley, 1956.

[B21] McCauley, T. M., "Through-Fault Capability Requirements for Unit Auxiliary Transformers," *IEEE Transactions on Power Apparatus and Systems*, Vol. PAS-96, no. 5, Sept./Oct. 1977, pp. 1639–1647.

[B22] McNutt, W. M., McMillen, C. J., Nelson, P. Q., and Dind, J. E., "Transformer Short-Circuit Strength and Standards (A State-of-the-art Paper)," *IEEE Transactions on Power Apparatus and Systems*, Vol. PAS-94, no. 2, Mar./Apr. 1975, pp. 432–43.

[B23] McNutt, W. J., "Short-Circuit Characteristics of Transformers," IEEE Course Text 76, CH1159-3-PWR, 1976.

[B24] *Protective Relaying Theory and Application*. Marcel Dekker, New York, 1994.

[B25] Rockefeller, G. D., Sonnemann, W. K., and Wagner, C. L., "Magnetizing Inrush Phenomena in Transformer Banks," *AIEE Transactions*, Vol. 77, pt. III, Oct. 1958, pp. 884–892.

[B26] Stignant, S. A., and Franklin, A. C., *J and P Transformer Book*. New York: Wiley, 1973.

[B27] "The Effects of GIC on Protective Relaying," *IEEE Power Systems Relaying Committee Working Group Report*.

[B28] "Transformer Standards—Status and Trends." *IEEE Transactions on Industry Applications*, Vol. IA-16, Jan./Feb., 1980, pp. 17–29.

[B29] Warrington, A. R. van C. *Protective Relays, Their Theory and Practice*. Vol. 1, New York: Wiley, 1963; Vol. 2, London: Chapman and Hall Ltd., 1969.

[B30] Wentz, E. C., and Allen, D. W., "Help for the Relay Engineer in Dealing with Transient Currents," *IEEE Transactions on Power Apparatus and Systems*, Vol. PAS-101, no. 3, Mar. 1982, pp. 519–524.

B.2 Phase-shifting transformer protection

[B31] Ibrahim, M., and Stacom, F., "Protection of the East Garden City 345 kV Phase Angle Regulating Transformers," *Georgia Institute of Technology Conference*, Apr. 29–May 1, 1992.

[B32] Plumptre, F. P., "Nelway Substation Phase Shifting Transformer Protection," *Western Protective Relay Conference*, Oct. 23–25, 1990.

Copyright © 2000 IEEE. All rights reserved.

Copyright The Institute of Electrical and Electronics Engineers, Inc.
Provided by IHS under license with IEEE
No reproduction or networking permitted without license from IHS
Not for Resale

B.3 Fault detection

General

[B33] Baleriaux, H., and Brohet, F., "Buchholz Relays," *CIGRE*, Paper no. 321, June 1960, pp. 1–10.

[B34] Bauman, H. A., Beattie, W. C., and Driscoll, J. M., "Automatic Trip Protection for Boiler-Turbine-Generator-Transformer Unit Installations," *CIGRE*, Paper no. 312, June 1960.

[B35] Brubaker, J. F., "Fault Protection and Indication on Substation Transformers," *IEEE Transactions on Power Apparatus and Systems*, Vol. IA-13, no. 3, May/June 1977, pp. 199–207.

[B36] Klingshirn, E. A., Moors, H. R., and Wentz, E. C., "Detection of Faults in Power Transformers," *AIEE Transactions*, Vol. 76, pt. III, Apr. 1957, pp. 87–98.

[B37] Labrie, R. J., "Protects Autotransformer Tertiary," *Electrical World*, Vol. 150, no. 2, July 14, 1958, p. 60.

[B38] Martin, J. P., Wendling, J., and Tournier, Y., "Specifics of the Short-Circuit Behavior of Concentrically-Wound Transformers and Autotransformers," *IEEE Transactions on Power Apparatus and Systems*, Vol. PAS-99, no. 6, Nov./Dec. 1980, pp. 2069–2078.

[B39] Perry, E. R., and Frey, A. M., "Transformer Protection with High-Speed Fault Initiating Switches," *Allis Chalmers Review*, Vol. 30, no. 4, 1965, pp. 4–8.

[B40] Rickley, A. L., Sr., Clark, R. E., and Povey, E. H., "Field Measurements of Transformer Excitation Current as a Diagnostic Tool," *IEEE Transactions on Power Apparatus and Systems*, Vol. PAS-100, no. 4, Apr. 1981, pp. 1985–1988.

[B41] Rizk, F. A. M., and Vincent, C., "Testing for Low Breakdown Probability with Special Reference to Liquid Insulation," *IEEE Transactions on Power Apparatus and Systems*, Vol. PAS-96, no. 8, Nov./Dec. 1977, pp. 1892–1899.

[B42] Staats, G. W., and Ebert, J. A., "Overvoltages in Medium Power Transformers," *IEEE Transactions on Power Apparatus and Systems*, Vol. PAS-101, no. 4, Apr. 1982, pp. 877–885.

Electrical

[B43] *Central Station Engineers Transmission and Distribution Reference Book*. Westinghouse Electric Co., East Pittsburgh, PA, 1950, pp. 126–188.

[B44] Dolan, E. J., Gilles, D. A., and Kimbark, E. W., "Ferroresonance in a Transformer Switched with an EHV Line," *IEEE Transactions on Power Apparatus and Systems*, Vol. PAS-91, no. 3, May/June 1972, pp. 1273–1280.

[B45] Einvall, C. H., and Linders, J. R., "A Three-Phase Differential Relay for Transformer Protection," *IEEE Transactions on Power Apparatus and Systems*, Vol. PAS-94, no. 6, Nov./Dec. 1975, pp. 1971–1980.

[B46] Elmore, W. A., "Ways to Assure Improper Operation of Transformer Differential Relays," *Georgia Institute of Technology Conference*, 1–3 May 1991.

[B47] Giuliante, A., Clough, G. K., and Gosalia, J., "Advances In the Design of Differential Protection for Power Transformers," *Western Protective Relay Conference*, 1991.

Copyright © 2000 IEEE. All rights reserved.

Copyright The Institute of Electrical and Electronics Engineers, Inc.
Provided by IHS under license with IEEE
No reproduction or networking permitted without license from IHS
Not for Resale

[B48] Glassburn, W. E., and Sharp, R. L., "A Transformer Differential Relay with Second Harmonic Restraint," *AIEE Transactions*, Vol. 77, pt. III, Dec. 1958, pp. 913–918.

[B49] Goodman, E. A., "A New Approach to Distribution Transformer Protection," *Proceedings of the American Power Conference*, Vol. 34, 1972, pp. 984–992.

[B50] Hayward, C. D., "Prolonged Inrush Current with Parallel Transformers Affects Differential Relaying," *AIEE Transactions*, Vol. 60, Dec. 1941, pp. 1096–1101.

[B51] IEEE Committee Report. "Protection of Power Transformers," *IEEE Transactions on Power Apparatus and Systems*, Vol. PAS 82, no. 12, Dec. 1963, pp. 1040–1044.

[B52] Mathews, C. A., "An Improved Transformer Differential Relay," *Electrical Engineering*, pt. III-A, June 1954, pp. 645–649.

[B53] McKenna, G. W., "Theory and Application of Transformer Differential Protection," *AIEE Transactions*, no. 69, pt. II, 1950, pp. 1197–1202.

[B54] Povh, D., and Shultz, W., "Analysis of Overvoltages Caused by Transformer Magnetizing Inrush Current," *IEEE Transactions on Power Apparatus Systems*, Vol. PAS-97, no. 4, Jul./Aug. 1978, pp. 1355–1365.

[B55] Shah, V. B., "Power Transformer Protection—Checking Connections of Ratio Differential and Circulating Current Relays," *Electrical Review*, London, no. 149, 1951, pp. 937–940.

[B56] Smith, R. L., "Practical Low-Voltage Equipment Ground-Fault Protection for Solidly-Grounded Systems with Wye-Connected Source Transformers," *IEEE Transactions on Industry Applications*, Vol. IA-18, no. 2, Mar./Apr. 1982, pp. 93–103.

[B57] Spiess, H., "A New Surge Restrained Differential Relay for Transformer Protection," *Bulletin Oerlikon*, no. 306, Oct. 1954, pp. 77–90.

[B58] Sterner, V., "The Protection of Large Transformers," *CIGRE,* Paper no. 348, June 1958, pp. 24–37.

[B59] Sterner, V., "The Protection of Large Transformers," *CIGRE,* Paper no. 334, June 1960, pp 8–21.

[B60] Sturton, A. B., "A New Differential Stand-by Protection," *Electrical Engineering*, Vol. 82, Dec. 1963, pp. 745–746.

[B61] Wagner, H. H., "Survey of TCC Tests on Transformers," IEEE Conference Paper, Feb. 1964, pp. 64–209.

[B62] Waldron, J. E., and Zocholl, S. E., "Design Considerations for a New Solid-State Transformer Differential Relay with Harmonic Restraint," *Western Protective Relay Conference*, 15–18 Oct. 1978.

Fuse protection

[B63] IEEE Std C37.40-1993, IEEE Standard Service Conditions and Definitions for High-Voltage Fuses, Distribution Enclosed Single-Pole Air Switches, Fuse Disconnecting Switches, and Accessories.

[B64] Fitzgerald, E. M., and Steward, V. N., "High Capacity Current Limiting Fuses Today," *AIEE Transactions*, Vol. 78, pt. III A, 1959, pp. 937–947.

[B65] Gruesen, K. R., and Larner, R. A., "Fuse Protection of High-Voltage Power Transformers," *AIEE Transactions*, Vol. 78, pt. III A, Oct. 1959, pp. 864–878.

Copyright © 2000 IEEE. All rights reserved.

Copyright The Institute of Electrical and Electronics Engineers, Inc.
Provided by IHS under license with IEEE
No reproduction or networking permitted without license from IHS
Not for Resale

[B66] Huber, W. J., "Selection and Coordination Criteria for Current Limiting Fuses," *IEEE Transactions on Industry Applications*, Vol. IA-13, no. 6, Nov./Dec. 1977, pp. 523–527.

Pressure and gas analysis

[B67] Anderson, R. N., "A New Fault-Pressure Relay Provides Fast, Effective Power Transformer Protection," *Distribution*, Vol. 21, no. 3, July 1959, pp. 8–9.

[B68] ASTM D3612 (1990), Standard Test Method for Analysis of Gases Dissolved in Electrical Insulating Oil by Gas Chromatography.

[B69] Bean, R. L., and Cole, H. L., "A Sudden Gas-Pressure Relay for Transformer Protection," *AIEE Transactions*, Vol. 72, pt. III, 1953, pp. 480–483.

[B70] Boyaris, E., and Guyot, W. S., "Experience with Fault-Pressure Relaying and Combustible Gas-Detection in Power Transformers," *Proceedings of the American Power Conference*, Vol. 33, 1971, pp. 1116–1126.

[B71] Crawford, C. I., and Wilson, A. F., "Incipient Transformer Fault Detected by Combustible Gas Monitoring Program and Ultra-Sound Tests," *IEEE Transactions on Power Apparatus and Systems*, Vol. PAS-83, no. 9, Sept. 1964, p. 926.

[B72] Haberl, H. W., Madill, J. T., and Smith, R. K., "Extensive Use of Gas Detector Relays in Canada," *CIGRE*, Paper no. 120, June 1960, pp. 1–15.

[B73] Harrison, D., "Transformer Gas Testing," *Ontario Hydro Research News*, Vol. 9, no. 4, Dec. 1957, pp. 11–15.

[B74] IEEE Std C57.104-1991, IEEE Guide for the Interpretation of Gases Generated in Oil-Immersed Transformers.

[B75] Kelly, J. J., "Transformer Fault Diagnosis by Dissolved-Gas Analysis," *IEEE Transactions on Industry Applications*, Vol. IA-16, no. 6, Nov./Dec. 1980, pp. 777–782.

[B76] Pugh, P. S., and Wagner, H. H., "The Detection of Incipient Faults on Transformers by Gas Analysis," *AIEE Transactions on Power Apparatus and Systems*, Vol. 80, pt. III, June 1961, pp. 189–195.

[B77] West, S. P., "Maintenance and Tests Make Fault Pressure Relays Reliable," *Electrical World*, 19 Jan. 1970, pp. 45–46.

[B78] Vora, J. P., and Aicher, L. C., "Transformer Fault-Gas Analysis and Interpretation," *IEEE Transactions on Power Apparatus and Systems*, Vol. PAS-82, no. 2, Feb. 1965, pp. 172–176.

Overvoltage

[B79] Alexander, G. W., Corbin, S. L., and McNutt, W. J., "Influence of Design and Operating Practices on Excitation of Generator Step-up Transformers," *IEEE Transactions on Power Apparatus and Systems*, Vol. PAS 85, no. 8, Aug. 1966, pp. 901–909.

[B80] Alexander, G. W., McNutt, W. J., Temoshok, J., and Walkley, W. W., "Generating Station Protection and Operating Practices to Avoid Equipment Overexcitation," *Proceedings of the American Power Conference*, 1967.

Copyright © 2000 IEEE. All rights reserved.

Copyright The Institute of Electrical and Electronics Engineers, Inc.
Provided by IHS under license with IEEE
No reproduction or networking permitted without license from IHS
Not for Resale

[B81] Arthur, J., Linders, J., and Stranne, G., "An Overexcitation Relay with Inverse Time Characteristics," *Western Protective Relay Conference*, Oct. 26–28, 1982.

[B82] Barthold, L. O., Johnson, I. B., and Schultz, A. J., "Overvoltages Following Secondary Switching of Transformers Connected to High-Voltage Lines," *AIEE Power Apparatus and Systems*, Vol. 78, no. 58, Feb. 1959, p. 1185.

[B83] Bellaschi, T. L., "Overexcitation of Large Generator Transformers," *Transmission and Distribution*, Aug. 1968.

[B84] Clarridge, C. H., "New Monitor System Guards Generator Transformers," *Electrical World*, 2 May 1966.

[B85] Goff, L. E., "A Volts Per Hertz Relay for the Protection of Transformers Against Overexcitation," *Georgia Institute of Technology Conference,* 4–5 May 1967.

[B86] IEEE Std C37.102-1995, IEEE Guide for AC Generator Protection.

[B87] McNutt, W. J., "Operation of Power Transformers During Major Power System Disturbances," General Electrical GED-3237A.

[B88] "Overexcitation of Power Transformers," General Electric GET-3364A.

[B89] Sealey, W. C., "Overexcitation of Power Transformers," *Allis-Chalmers Engineering Review*, Vol. 30, no. 4, 1965.

[B90] Wagner, C. L., "Overexcitation Problems and Protection of Generators and Transformers," *Georgia Institute of Technology Conference*, 4 May 1967.

Copyright © 2000 IEEE. All rights reserved.

Copyright The Institute of Electrical and Electronics Engineers, Inc.
Provided by IHS under license with IEEE
No reproduction or networking permitted without license from IHS
Not for Resale