IEEE Std C37.90.3-2001

IEEE Standards

IEEE Standard Electrostatic Discharge Tests for Protective Relays

IEEE Power Engineering Society

Sponsored by the
Power System Relaying Committee

Published by
The Institute of Electrical and Electronics Engineers, Inc.
3 Park Avenue, New York, NY 10016-5997, USA

17 October 2001

Print: SH94929
PDF: SS94929

Copyright The Institute of Electrical and Electronics Engineers, Inc.
Provided by IHS under license with IEEE
No reproduction or networking permitted without license from IHS

Not for Resale

IEEE Standard Electrostatic Discharge Tests for Protective Relays

Sponsor

Power System Relaying Committee
of the
IEEE Power Engineering Society

Approved 14 June 2001

IEEE-SA Standards Board

Abstract: This standard describes test procedure, test point selection, test level, and acceptance criteria for repeatable electrostatic discharge immunity evaluations for tabletop and floor-standing protective relay equipment. Simulator characteristics for hand/metal ESD testing are specified for both the air and contact discharge methods. This standard has been harmonized with other ESD standards where consensus could be reached.
Keywords: air discharge, contact discharge, coupling plane, direct application, electrostatic discharge (ESD), indirect application, protective relay

The Institute of Electrical and Electronics Engineers, Inc.
3 Park Avenue, New York, NY 10016-5997, USA

Copyright © 2001 by the Institute of Electrical and Electronics Engineers, Inc.
All rights reserved. Published 17 October 2001. Printed in the United States of America.

Print: ISBN 0-7381-2842-2 SH94929
PDF: ISBN 0-7381-2843-0 SS94929

No part of this publication may be reproduced in any form, in an electronic retrieval system or otherwise, without the prior written permission of the publisher.

Copyright The Institute of Electrical and Electronics Engineers, Inc.
Provided by IHS under license with IEEE
No reproduction or networking permitted without license from IHS Not for Resale

IEEE Standards documents are developed within the IEEE Societies and the Standards Coordinating Committees of the IEEE Standards Association (IEEE-SA) Standards Board. The IEEE develops its standards through a consensus development process, approved by the American National Standards Institute, which brings together volunteers representing varied viewpoints and interests to achieve the final product. Volunteers are not necessarily members of the Institute and serve without compensation. While the IEEE administers the process and establishes rules to promote fairness in the consensus development process, the IEEE does not independently evaluate, test, or verify the accuracy of any of the information contained in its standards.

Use of an IEEE Standard is wholly voluntary. The IEEE disclaims liability for any personal injury, property or other damage, of any nature whatsoever, whether special, indirect, consequential, or compensatory, directly or indirectly resulting from the publication, use of, or reliance upon this, or any other IEEE Standard document.

The IEEE does not warrant or represent the accuracy or content of the material contained herein, and expressly disclaims any express or implied warranty, including any implied warranty of merchantability or fitness for a specific purpose, or that the use of the material contained herein is free from patent infringement. IEEE Standards documents are supplied "**AS IS.**"

The existence of an IEEE Standard does not imply that there are no other ways to produce, test, measure, purchase, market, or provide other goods and services related to the scope of the IEEE Standard. Furthermore, the viewpoint expressed at the time a standard is approved and issued is subject to change brought about through developments in the state of the art and comments received from users of the standard. Every IEEE Standard is subjected to review at least every five years for revision or reaffirmation. When a document is more than five years old and has not been reaffirmed, it is reasonable to conclude that its contents, although still of some value, do not wholly reflect the present state of the art. Users are cautioned to check to determine that they have the latest edition of any IEEE Standard.

In publishing and making this document available, the IEEE is not suggesting or rendering professional or other services for, or on behalf of, any person or entity. Nor is the IEEE undertaking to perform any duty owed by any other person or entity to another. Any person utilizing this, and any other IEEE Standards document, should rely upon the advice of a competent professional in determining the exercise of reasonable care in any given circumstances.

Interpretations: Occasionally questions may arise regarding the meaning of portions of standards as they relate to specific applications. When the need for interpretations is brought to the attention of IEEE, the Institute will initiate action to prepare appropriate responses. Since IEEE Standards represent a consensus of concerned interests, it is important to ensure that any interpretation has also received the concurrence of a balance of interests. For this reason, IEEE and the members of its societies and Standards Coordinating Committees are not able to provide an instant response to interpretation requests except in those cases where the matter has previously received formal consideration.

Comments for revision of IEEE Standards are welcome from any interested party, regardless of membership affiliation with IEEE. Suggestions for changes in documents should be in the form of a proposed change of text, together with appropriate supporting comments. Comments on standards and requests for interpretations should be addressed to:

Secretary, IEEE-SA Standards Board
445 Hoes Lane
P.O. Box 1331
Piscataway, NJ 08855-1331
USA

Note: Attention is called to the possibility that implementation of this standard may require use of subject matter covered by patent rights. By publication of this standard, no position is taken with respect to the existence or validity of any patent rights in connection therewith. The IEEE shall not be responsible for identifying patents for which a license may be required by an IEEE standard or for conducting inquiries into the legal validity or scope of those patents that are brought to its attention.

The IEEE and its designees are the sole entities that may authorize the use of IEEE-owned certification marks and/or trademarks to indicate compliance with the materials set forth herein.

Authorization to photocopy portions of any individual standard for internal or personal use is granted by the Institute of Electrical and Electronics Engineers, Inc., provided that the appropriate fee is paid to Copyright Clearance Center. To arrange for payment of licensing fee, please contact Copyright Clearance Center, Customer Service, 222 Rosewood Drive, Danvers, MA 01923 USA; +1 978 750 8400. Permission to photocopy portions of any individual standard for educational classroom use can also be obtained through the Copyright Clearance Center.

Copyright © 2001 IEEE. All rights reserved.
Copyright The Institute of Electrical and Electronics Engineers, Inc.
Provided by IHS under license with IEEE
No reproduction or networking permitted without license from IHS
Not for Resale

Introduction

(This introduction is not a part of IEEE Std C37.90.3-2001, IEEE Standard Electrostatic Discharge Tests for Protective Relays.)

This standard was prepared by the Electrostatic Discharge Tests Working Group, I7, of the Relay Practices and Consumer Interface Protection Subcommittee of the Power System Relaying Committee.

In preparing this standard, consideration has been given to other committees and especially to Technical Committee 95 of the International Electrotechnical Commission (IEC) for their work in preparing IEC 60255, Electrical Relays, Part 22: Electrical disturbance tests for measuring relays and protection equipment—Section Two—Electrostatic discharge tests.

At the time this standard was completed, the Electrostatic Discharge Tests Working Group, I7, of the Relay Practices and Consumer Interface Protection Subcommittee of the Power System Relaying Committee had the following membership:

James Teague, *Chair*
Mark Simon, *Vice Chair*

Jeffrey A. Burnworth	Jeffrey G. Gilbert	William C. Kotheimer
John W. Chadwick, Jr.	William Higinbotham	Robert D. Pettigrew
Kenneth Fodero	Jerry Johnson	David Viers

The following members of the balloting group voted on this standard. Balloters may have voted for approval, disapproval, or abstention.

Richard Angle	Stephen E. Grier	Charles W. Rogers
John Appleyard	E. A. Guro	Bob Ryan
Munnu Bajpai	Robert W. Haas	Mohindar S. Sachdev
Robert W. Beckwith	Robert E. Hall	Miriam P. Sanders
Hubert Bilodeau	Charles F. Henville	Kenneth H. Sebra
Stuart Borlase	Jerry W. Hohn	Hong-Ming Shuh
Stuart H. Bouchey	John J. Horwarth	Tarlochan Sidhu
John Boyle	James D. Huddleston, III	Mark S. Simon
Daniel F. Brosnan	Chris R. Huntley	Veselin Skendzic
John Burger	James W. Ingleson	John Sperr
Jeffrey A. Burnworth	K. J. Khunkhun	James E. Stephens
Mark Carpenter	Joseph L. Koepfinger	William M. Strang
Robert C. Carruth	William C. Kotheimer	Malcolm J. Swanson
Carlos H. Castro	Daniel J. Love	Glenn Swift
Stephen P. Conrad	W. J. Marsh, Jr.	Richard P. Taylor
Gerald Dalke	John D. McDonald	James Teague
Douglas C. Dawson	M. Meisinger	John T. Tengdin
Robert W. Dempsey	Gary L. Michel	James S. Thorp
Clifford Downs	Daleep C. Mohla	Gary J. Toman
Donald G. Dunn	Charles J. Mozina	Joe T. Uchiyama
Walter Elmore	Brian Mugalian	Eric A. Udren
Kenneth Fodero	Bruce A. Muschlitz	Charles L. Wagner
Julian K. Forster	George R. Nail	Ronald M. Westfall
Jeffrey G. Gilbert	Robert D. Pettigrew	Philip B. Winston
Mietek T. Glinkowski	Arun G. Phadke	Murty V. Yalla
Russell W. Gonnam	Alan C. Pierce	John A. Zipp
John Kenneth Greene	Roger E. Ray	Stan Zocholl

Copyright © 2001 IEEE. All rights reserved.

Copyright The Institute of Electrical and Electronics Engineers, Inc.
Provided by IHS under license with IEEE
No reproduction or networking permitted without license from IHS
Not for Resale

The Standards Committee on Power Switchgear, C37, who reviewed and approved this standard, had the following membership at the time of approval:

E. Bryon, *Chair*
Andrew K. McCabe, *Executive Vice-Chair of High-Voltage Switchgear Standards*
J. C. Scott, *Executive Vice-Chair Low-Voltage Switchgear Standards*
D. L. Swindler, *Executive Vice-Chair of IEC Activities*
Mervis Calwise, *NEMA Co-Secretary*
Naeem Ahmad, *IEEE Co-Secretary*

Organization Represented	*Name of Representative*
Association of Iron and Steel Engineers	(vacant)
Electric Light and Power Group/Edison Electric Institute (EEI)	D. E. Galicia
	J. L. Koepfinger
	G. J. Martuscello
	Y. Musa
	E. M. Worland
Institute of Electrical and Electronics Engineering (IEEE)	T. A. Burse
	K. Gray
	A. C. Monroe
	R. J. Puckett
	T. E. Royster
	R. D. Garzon
	J. Wood
International Electricity Testing Association (NETA)	A. Peterson
National Electric Contractors Association	D. Harwood
National Electrical Manufacturers Association (NEMA)	E. Bryon
	G. T. Jones
	R. W. Long
	T. Olsen
	G. Sakats
	D. L. Stone
Tennessee Valley Authority	D. N. Reynolds
Testing Lab Group	E. Rosen
	P. Notarian
U.S. Department of Agriculture	H. Bowles
U.S. Department of the Army, Office of the Chief of Engineers	J. A. Gilson
U.S. Department of the Navy, Naval Construction Battalion Center	D. Mills
Western Area Power Administration	(vacant)

Copyright © 2001 IEEE. All rights reserved.
Copyright The Institute of Electrical and Electronics Engineers, Inc.
Provided by IHS under license with IEEE
No reproduction or networking permitted without license from IHS
Not for Resale

When the IEEE-SA Standards Board approved this standard on 14 June 2001, it had the following membership:

Donald N. Heirman, *Chair*
James T. Carlo, *Vice Chair*
Judith Gorman, *Secretary*

Satish K. Aggarwal	James H. Gurney	James W. Moore
Mark D. Bowman	Richard J. Holleman	Robert F. Munzner
Gary R. Engmann	Lowell G. Johnson	Gerald H. Peterson
Harold E. Epstein	Robert J. Kennelly	Ronald C. Petersen
H. Landis Floyd	Joseph L. Koepfinger*	John B. Posey
Jay Forster*	Peter H. Lips	Gary S. Robinson
Howard M. Frazier	L. Bruce McClung	Akio Tojo
Ruben D. Garzon	Daleep C. Mohla	Donald W. Zipse

*Member Emeritus

Also included is the following nonvoting IEEE-SA Standards Board liaison:

Alan Cookson, *NIST Representative*
Donald R. Volzka, *TAB Representative*

Savoula Amanatidis
IEEE Standards Managing Editor

Copyright © 2001 IEEE. All rights reserved.

Copyright The Institute of Electrical and Electronics Engineers, Inc.
Provided by IHS under license with IEEE
No reproduction or networking permitted without license from IHS
Not for Resale

Contents

1. Scope 1

2. Definitions 1

3. Electrostatic discharge disturbance test 2

3.1 Types of tests 2

3.2 Test procedure 2

3.3 Criteria for acceptance 6

3.4 Test data records 6

Annex A (informative) Bibliography 8

Annex B (informative) Explanatory notes on ESD disturbance tests 9

Annex C (informative) Explanatory notes on ESD generator 11

Annex D (informative) A comparison of IEEE Std C37.90.3-2001 with relevant IEC 60255-22-2 12

Copyright © 2001 IEEE. All rights reserved.

Copyright The Institute of Electrical and Electronics Engineers, Inc.
Provided by IHS under license with IEEE
No reproduction or networking permitted without license from IHS

Not for Resale

IEEE Standard Electrostatic Discharge Tests for Protective Relays

1. Scope

This standard specifies design tests for electrostatic discharge (ESD) tests of protective relays and relay systems. The object of the type test described in this standard is to confirm that the equipment being tested will not misoperate or be damaged when installed, energized, and subjected to a specified electrostatic discharge. Application of the discharge to any point on the equipment that is accessible only for repair and maintenance purposes is outside the scope of this standard.

This standard contains four annexes. Annex A is a bibliography. Annex B is an explanation of ESD disturbance tests. Annex C is an explanation of an ESD generator. Annex D contains a comparison of IEEE Std C37.90.3-2001 with IEC 60255-22-2 Ed.2.0 (1996-09) [B4].[1]

2. Definitions

For the purposes of this standard, the following terms and definitions apply. IEEE 100 *The Authoritative Dictionary of Standards Terms*, Seventh Edition [B6], and IEEE Std C37.100-2001 *IEEE Standard Definitions for Power Switchgear* [B7] should be referenced for terms not defined in this clause.

2.1 air discharge: A method of testing in which the charged electrode of the test generator is approached to the unit under test, or coupling plane, and the discharge is actuated by a spark to the unit under test, or coupling plane. (A discharge might not occur to nonconducting surfaces.)

2.2 contact discharge: A method of testing in which the electrode of the test generator is held in contact with a conductive surface on the unit under test, or coupling plane, and the discharge is actuated by a switch on the generator after the electrode contact has been made.

2.3 coupling plane: A metal plate to which discharges are applied to simulate electrostatic discharge to an object adjacent to the unit under test.

2.4 direct application: Application of the test directly to the unit under test.

2.5 indirect application: Application of the test to a coupling plane in the vicinity of the unit under test.

[1]The numbers in brackets correspond to those of the bibliography in Annex A.

--`,,`-`-`,,`,,`,`,,`---
Copyright © 2001 IEEE. All rights reserved.

Copyright The Institute of Electrical and Electronics Engineers, Inc.
Provided by IHS under license with IEEE
No reproduction or networking permitted without license from IHS
Not for Resale

3. Electrostatic discharge disturbance test

3.1 Types of tests

Two test methods and two application methods are common. These are

a) Test methods
   1) Contact discharge method
   2) Air discharge method

b) Application methods
   1) Direct application
   2) Indirect application

Direct application to the unit under test using the contact discharge method shall be used when the points to be tested are conductive.

Direct application to the unit under test using the air discharge method shall be used when the points to be tested are nonconductive.

Indirect application (the use of a coupling plane) is applicable to protective equipment when the air discharge method fails to produce a spark.

3.2 Test procedure

A simple overview diagram of the test procedure is given in Figure 1.

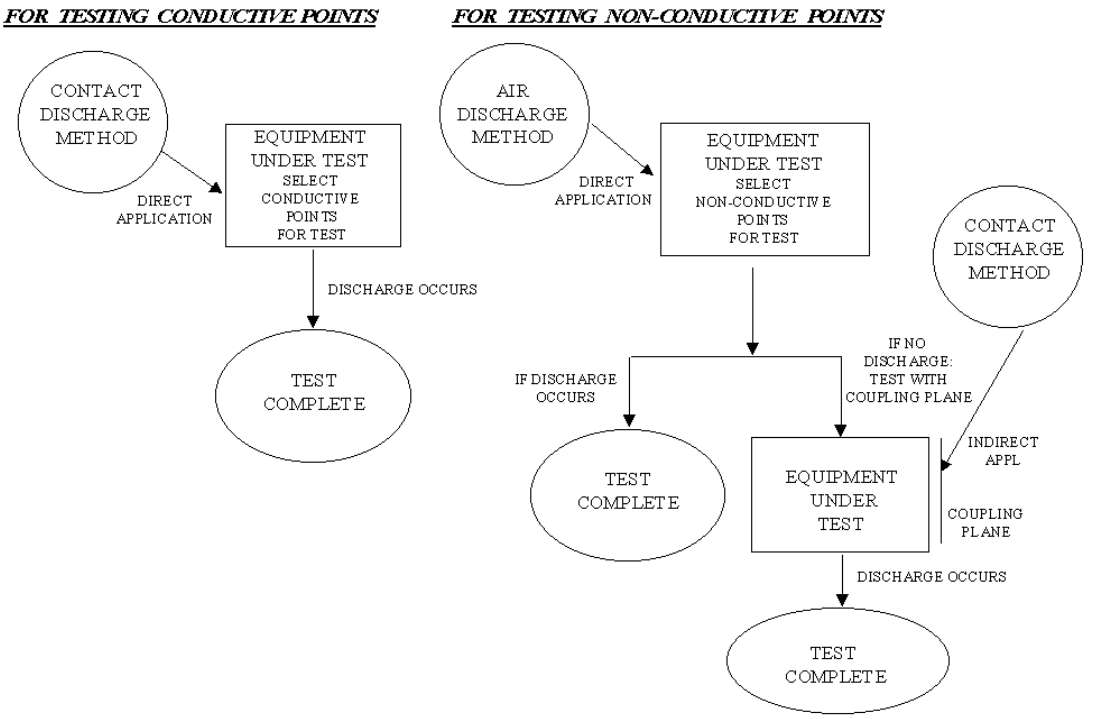

Figure 1—Overview of testing procedure

Copyright © 2001 IEEE. All rights reserved.
Copyright The Institute of Electrical and Electronics Engineers, Inc.
Provided by IHS under license with IEEE
No reproduction or networking permitted without license from IHS
Not for Resale

3.2.1 Climatic test conditions

The tests shall be performed with the equipment under these climatic conditions:

a) Ambient temperature within the limits of +15 °C to +35 °C
b) Relative humidity 30% to 60%
c) Atmospheric pressure 86 kPa to 106 kPa

3.2.2 Relay setup

It is the intent of this test to duplicate, as nearly as possible, in-service conditions with the relay in its normal state. Where appropriate, the relay shall be energized with rated voltage and with current equal to 75% of the nominal input current rating. The relay settings should be chosen such that the relay is as close as possible to its transitional state, but not closer than the recommended margins for its application. Input voltages to the power supply circuit must be within the specified limits. The relay shall be tested in its case and as described in 3.2.4. The external wiring to the relay, including the ground connection, shall be consistent with the manufacturer's recommended installation practice.

3.2.3 Test wave shape

The wave shape of the contact discharge current is characterized by the values given in Table 1. The wave shape is shown in Figure 2. Generators that produce this test wave shape are commercially available. The same generator is used for air discharge but the wave shape is a variable.

Table 1—Wave-shape characteristics—contact discharge

Discharge voltage	First peak of current	Rise time, *tr* 10% – 90% I_p	Current at 30 ns	Current at 60 ns
8 kV, ± 5%	30 A, ±10%	0.7 to 1 ns	16 A, ±30%	8 A, ±30%

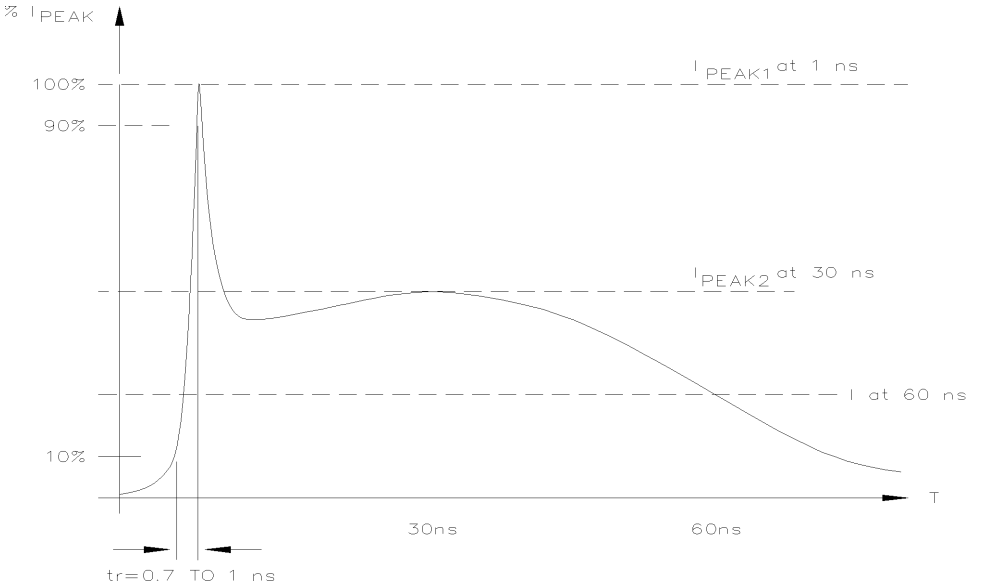

Figure 2—Typical waveform of the contact discharge current of the ESD generator

Copyright © 2001 IEEE. All rights reserved.

Copyright The Institute of Electrical and Electronics Engineers, Inc.
Provided by IHS under license with IEEE
No reproduction or networking permitted without license from IHS
Not for Resale

3.2.4 Test setup

A test setup example for small equipment is shown in Figure 3 and for large equipment is shown in Figure 4.

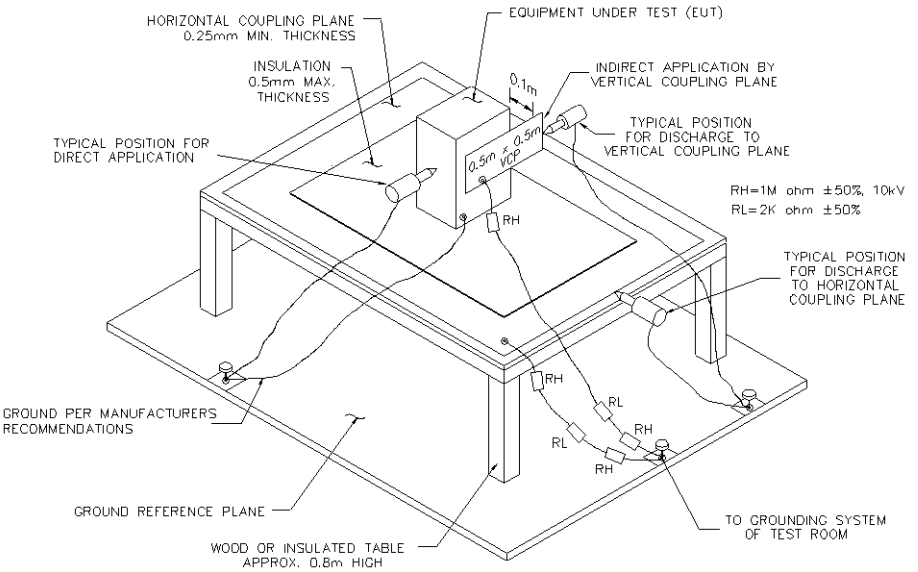

Figure 3—Example of test setup for small equipment

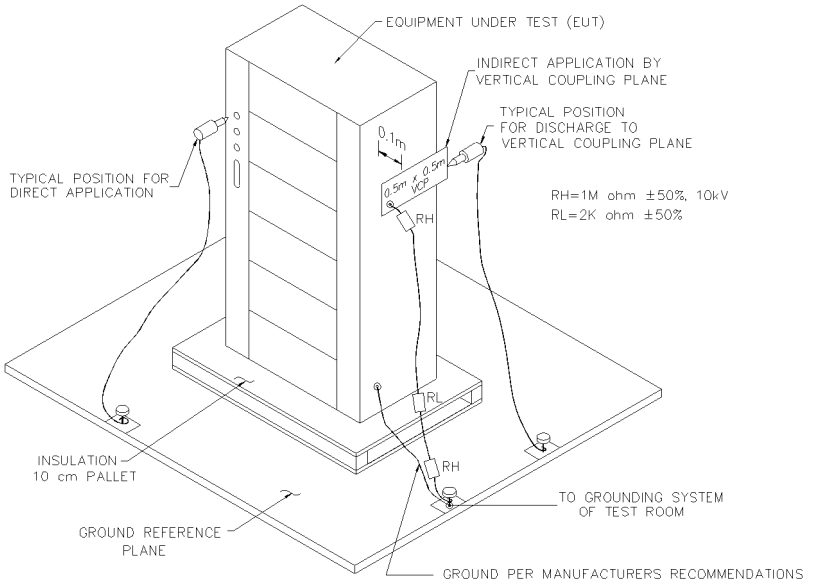

Figure 4—Example of test setup for large equipment

A ground reference plane shall be used to assure reproducible conditions regarding capacitive coupling. The ground reference plane shall:

a) Consist of a copper or aluminum sheet of at least 0.25 mm thickness; other metallic materials may be used but they shall have at least 0.65 mm thickness;

Copyright © 2001 IEEE. All rights reserved.
Copyright The Institute of Electrical and Electronics Engineers, Inc.
Provided by IHS under license with IEEE
No reproduction or networking permitted without license from IHS
Not for Resale

b) Project beyond the equipment under test (EUT) at least 0.5 m on all sides, except that it must project 50% of the height of the EUT if the EUT is taller than 1 m;
c) Be connected to the facility ground;
d) Be a minimum distance to walls and metallic structures of at least 1 m.

A floor-mounted EUT shall be separated from the ground reference plane by insulation of approximately 0.1 m thickness. A small EUT shall be separated from the ground reference plane by an insulated table approximately 0.8 m high.

The discharge generator shall be grounded directly to the ground reference plane, close to the EUT, using a ground cable 2 m long with a width of at least 20 mm. A ground cable longer than 2 m may be used when required to reach test points on large equipment. Also, the test supplies and monitoring equipment shall be grounded to the ground reference plane. During the test, the grounding cable of the discharge generator shall be kept at least 0.1 m from the EUT, and at least 0.2 m from metal surfaces other than the ground reference plane. Cables interconnecting the EUT, test supplies, and monitoring equipment shall be kept at least 0.1 m from the ground plane.

For small equipment, a horizontal coupling plane (HCP) shall be used between the table and the EUT. Insulation with thickness of 0.5 mm or smaller shall be placed between the HCP and the EUT. A vertical coupling plane (VCP) may be needed for both floor-mounted equipment and table-mounted equipment (see Figure 1).

The HCP and VCP are to be constructed from the same material and thickness as the ground reference plane. The HCP shall be a minimum of 1.6 m by 0.8 m and project beyond the EUT by at least 0.1 m on each side. The VCP shall be 0.5 m by 0.5 m and located 0.1 m from the vertical face of the EUT. Each coupling plane shall be grounded through resistors as shown in Figure 3 and Figure 4. The 1 MΩ resistors (RH) located at each end of the charge bleed strap must have a transient withstand voltage of 10 kV or greater to prevent breakdown which would cause false current loops. The 2 kΩ resistor (RL) located between the two RH resistors prevents the stray capacitance of the high-voltage resistor from forming a ringing circuit.

3.2.5 Test point selection

The points selected for the application of the test shall be those that are accessible under normal in-service conditions. Test points shall include relay case, knobs, push buttons, switches, terminals, data ports, keypads, target resets, etc.

The application of discharge to any point of the equipment that is accessed only for repair and maintenance purposes is outside the scope of this standard. Examples are

a) Terminals normally wired at installation.
b) Setting adjustments that are not accessed during normal service conditions.

Categorize all test points as conductive or nonconductive and follow the testing procedure given in Figure 1. Test both horizontal and vertical coupling planes when coupling plane testing is required by Figure 1. Vertical coupling plane testing shall be performed in all four positions relative to the EUT.

3.2.6 Test levels

The equipment under test shall be tested at each of the voltage levels shown in Table 2. Subclause 3.1 and Figure 1 define when to use the contact method and when to use the air discharge method. These test levels apply to both the direct and indirect methods of application.

Copyright © 2001 IEEE. All rights reserved.

Copyright The Institute of Electrical and Electronics Engineers, Inc.
Provided by IHS under license with IEEE
No reproduction or networking permitted without license from IHS Not for Resale

Table 2—Test levels

Contact discharge— test voltages, kV	Air discharge— test voltages, kV
2	4
4	8
8	15

3.2.7 Discharge application

3.2.7.1 Direct application

The discharge generator shall approach the EUT perpendicularly to the plane being tested. Apply 10 positive and 10 negative discharges to each test point selected with a time interval between discharges of at least 1 s.

3.2.7.2 Indirect application

See 3.1 and Figure 1 to determine whether an indirect application is required. When an indirect application is required, the discharge generator shall be applied to the center of one edge of both horizontal and vertical coupling planes. Test with the vertical coupling plane facing each surface where the air discharge method failed to produce a spark. Apply 10 positive and 10 negative discharges to each coupling plane with a time interval between discharges of at least 1 s.

3.3 Criteria for acceptance

During the test:

— No erroneous output or loss of output shall occur.

— No system reset or time out of watchdog timer is allowed.

— Transient false operation of output contacts or alarm contacts for any duration is not acceptable.

— Transient false operation by indicators is acceptable.

After the test:

— The equipment shall comply with the relevant performance specifications.

— No component failures are allowed.

3.4 Test data records

The test program and test results shall be recorded and made available upon request. The report should be adequate to guide another person to duplicate the tests without having observed the original test program. This record would typically include the following:

a) Product model and revision level;
b) Details of product settings, inputs, and operating conditions;
c) Diagram and/or photographs of the arrangement of the product and interface cables;
d) Description of the types and characteristics of interface cables;

Copyright © 2001 IEEE. All rights reserved.
Copyright The Institute of Electrical and Electronics Engineers, Inc.
Provided by IHS under license with IEEE
No reproduction or networking permitted without license from IHS
Not for Resale

e) Diagram and/or photographs illustrating the discharge points, test method, and test application;
f) Points tested and test results, including a list of all indirect points;
g) Record of the test site ambient temperature, relative humidity, atmospheric pressure, and date;
h) Description of the ESD simulator used and its calibration credentials.

Copyright © 2001 IEEE. All rights reserved.

Copyright The Institute of Electrical and Electronics Engineers, Inc.
Provided by IHS under license with IEEE
No reproduction or networking permitted without license from IHS Not for Resale

Annex A

(informative)

Bibliography

[B1] ANSI C63.16-1993, American National Standard Guide for Electrostatic Discharge Test Methodologies and Criteria for Electronic Equipment.

[B2] ANSI/IEEE Std C37.90-1989 (Reaff 1994), IEEE Standard for Relays and Relay Systems Associated with Electric Power Apparatus.[2]

[B3] ANSI/IEEE Std C62.47-1992, IEEE Guide on Electrostatic Discharge (ESD): Characterization of the ESD Environment.

[B4] IEC 60255-22-2 Ed.2.0 (1996-09), Electrical Relays, Part 22: Electrical disturbance tests for measuring relays and protection equipment—Part 2: Electrostatic discharge tests.[3]

[B5] IEC 61000-4-2 Ed.1.0 (1995-01), Electromagnetic Compatibility (EMC) Part 4: Testing and Measurement Techniques—Section 2: Electrostatic discharge immunity test. Basic EMC Publication.

[B6] IEEE 100, *The Authoritative Dictionary of IEEE Standard Terms*, Seventh Edition.

[B7] IEEE Std C37.100-1992 (Reaff 2001), IEEE Standard Definitions for Power Switchgear.[4]

[B8] IEEE Std C62.38-1994 (Reaff 1999), IEEE Guide on Electrostatic Discharge (ESD): ESD Withstand Capability Evaluation Methods (for Electronic Equipment Subassemblies).

[2]ANSI/IEEE publications are available from the Institute of Electrical and Electronics Engineers (IEEE), Service Center, 445 Hoes Lane, P.O. Box 1331, Piscataway, NJ 08855-1331, USA (http://standards.ieee.org/).
[3]IEC publications are available from American National Standards Institute, Sales Dept., 11 West 42nd Street, 13th Floor, New York, NY 10036, USA.
[4]IEEE publications are available from the Institute of Electrical and Electronics Engineers, 445 Hoes Lane, P.O. Box 1331, Piscataway, NJ 08855-1331, USA (http://standards.ieee.org/).

Copyright © 2001 IEEE. All rights reserved.
Copyright The Institute of Electrical and Electronics Engineers, Inc.
Provided by IHS under license with IEEE
No reproduction or networking permitted without license from IHS
Not for Resale

Annex B

(informative)

Explanatory notes on ESD disturbance tests

Electronic equipment may be affected by electrostatic discharges that are applied either directly to the equipment or to metal objects in the proximity of the equipment. The primary concern of this standard is the effect of these electrostatic discharges, generated by the human body, on protective relay equipment.

Electrostatic charges are easily generated in an environment with dry atmosphere and synthetic fabrics. The operator's body may be charged either directly or by electrostatic induction. There are many possible variations in the charging process. A common situation is one where an operator walks over a carpet and at each step loses or gains electrons relative to the fabric. The charges can be carried over a long distance by people wearing insulating shoes. In such cases it does not help if the floor, where the electronic equipment is placed, consists of conducting material. An exchange of electrostatic charges can also occur due to friction between a person's clothing and a seat or chair. The level to which the human body is charged depends on the material in the clothing and in the room (specifically the floor), and on the relative humidity of the room.

Examples of electrostatic charges:

a) *Below 2 kV*: Environments where floors are covered with antistatic material and the relative humidity is greater than 35%.

b) *2 kV to 4 kV*: Environment where floors are covered with antistatic material and the relative humidity is greater than 10%.

c) *4 kV to 8 kV*: Environment where floors are covered with material which tends to generate static electricity (e.g. synthetic material) and the relative humidity is greater than 50%.

d) *8 kV to 15 kV*: Environment where floors are covered with material which tends to generate static electricity (e.g. synthetic material) and the relative humidity is greater than 10%.

The effect of discharge from the operator may be a malfunction of the equipment or damage to electronic components. The dominant effects can be attributed to the parameters of the discharge current (rise time, duration, etc.).

The most common discharge behavior can be classified as follows:

— In a discharge from a hand or a discharge generator, a part of the charge is coupled capacitively, locally in the region where the discharge occurs. This charge is discharged with a current pulse of very short duration, which can be of high amplitude and can therefore represent a severe condition for the equipment. The remaining discharge causes a current that is distributed over the equipment subject to the discharge and, via this equipment, to other units connected to it and further to ground.

Copyright © 2001 IEEE. All rights reserved.

Copyright The Institute of Electrical and Electronics Engineers, Inc.
Provided by IHS under license with IEEE
No reproduction or networking permitted without license from IHS
Not for Resale

— If a ground connection exists between the cover of the equipment and a conducting floor, the discharge current will go through the cover to ground. The current shape is determined by the source capacitance and resistance, and the low inductance in the path to ground. This generates a current pulse with a rise time of a few nanoseconds and a tail extending tens of nanoseconds.

— If the equipment cover is not grounded or the ground path has a high impedance, the discharge current will flow through other parts. The inductance of these other parts can cause a significant increase in rise time. The current shape is a damped oscillatory wave.

— When a significant amount of the discharge current flows through other parts to the ground, the electronic circuitry can be subjected to inductive coupling or radiation.

— When the discharge current flows from one unit to another along connecting cables, the signals may be strongly affected by interference.

Copyright © 2001 IEEE. All rights reserved.
Copyright The Institute of Electrical and Electronics Engineers, Inc.
Provided by IHS under license with IEEE
No reproduction or networking permitted without license from IHS
Not for Resale

Annex C

(informative)

Explanatory notes on ESD generator

Discharge generators are commercially available. For informational purposes only, the characteristics of a generator are listed, and a simplified diagram is given in Figure C.1.

a) Energy storage capacitance ($Cs + Cd$): 150 pF ± 10%

b) Discharge resistance (Rd): 330 Ω ± 10%

c) Charging resistance (Rc): between 50 and 100 MΩ

d) Open circuit output voltage measured at the energy storage capacitor:

   up to 8 kV (nominal) for contact discharge
   up to 15 kV (nominal) for air discharge

e) Tolerance of the output voltage indication: ±5%

f) Polarity of the output voltage: positive and negative

g) Holding time: at least 5 seconds

h) Discharge modes: single discharge with time between successive discharges of at least 1 s; the generator shall also be able to generate at a repetition rate of at least 20 discharges per second for exploratory purposes only.

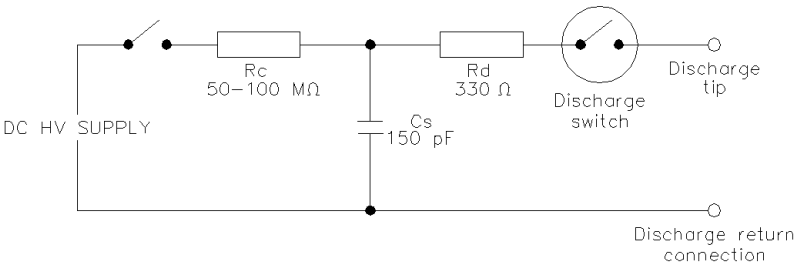

Figure C.1—Simplified diagram of the ESD generator

This simplified circuit illustrates only the principle of operation of the generator. It will not produce the specific current waveform shown in Figure 2. *Cd*, omitted in Figure C.1, is a distributed stray capacitance, which exists between the generator and the EUT and the ground reference plane. Because it is distributed in an undefined manner over the whole of the generator, it is not possible to represent it in this simple circuit. Also, the distributed self inductances of all the internal elements of the generator are not represented in the simplified circuit diagram. These, along with the already mentioned stray capacitances, are the main elements determining the shape of the output current waveform shown in Figure 2. This includes the self inductance of the ground return lead, which is not represented in Figure C.1.

Copyright © 2001 IEEE. All rights reserved.

Copyright The Institute of Electrical and Electronics Engineers, Inc.
Provided by IHS under license with IEEE
No reproduction or networking permitted without license from IHS
Not for Resale

Annex D

(informative)

A comparison of IEEE Std C37.90.3-2001 with relevant IEC 60255-22-2 Ed.2.0 (1996-09) [B4]

These are the details in which IEEE Std C37.90.3-2001 deviates from the corresponding IEC standard, with a brief explanation of the underlying reason for the deviation:

a) *Severity classes*. IEC 60255-22-2-1996 defines four severity classes that apply to different environmental conditions. This document states that protective relays that meet class 3 are suitable for use in power plants and substations. Class 3 applies to an environment in which the discharge voltage is kept below 8 kV. This corresponds to an environment where relative humidity is no lower than 50%.

   The test level in this standard corresponds to IEC 60255-22-2-1996 severity class 4. Class 4 severity was determined to be appropriate because relative humidity levels in areas where protective relays are applied in the United States and other countries fall far below 50%.

b) *Test generator*. IEC 60255-22-2-1996 includes some generator characteristics and refers to another document for detailed generator definition. Annex C of IEEE Std C37.90.3-2001 lists discharge generator characteristics and includes a simplified generator circuit to illustrate the principle of operation. IEEE Std C37.90.3-2001 does not include generator details because the waveforms that test generators must produce are specified sufficiently both to design generators and to determine whether other commercially available generators meet test requirements. Detailed design of discharge generators to produce test wave shapes is left to generator manufacturers.

c) *Grounding*

   1) *Grounding of the VCP and HCP*. Although IEC 60255-22-2-1996 does not require testing with a VCP or HCP, IEC 61000-4-2 Ed.1.0 (1995-01) [B5] does require testing the VCP and the HCP. For this testing, IEC 61000-4-2 requires grounding the VCP and HCP through a 470 kΩ resistor at each end. IEEE Std C37.90.3-2001 requires grounding the VCP and HCP through a 1 MΩ resistor at each end plus a 2 kΩ resistor which prevents the stray capacitance of the 1 MΩ resistors from forming a ringing circuit.

   2) *Intentional grounding*. IEC 60255-22-2-1996 requires that all parts intended to be connected to earth ground be connected to the ground reference plane by a copper strap at least 20 mm wide. IEEE Std C37.90.3-2001 requires that products be connected to ground in the manner given in the product literature by the manufacturer. (Some products may not have an intentional ground point.)

d) *Test conditions, current input circuits*. IEEE Std C37.90.3-2001 requires current flow in current inputs to be 75% of the nominal input current rating. IEC 60255-22-2-1996 requires input energizing quantities to be as close as possible to the transitional state, but not closer than the claimed variation due to electrostatic discharge. This state may have many different possible

Copyright © 2001 IEEE. All rights reserved.
Copyright The Institute of Electrical and Electronics Engineers, Inc.
Provided by IHS under license with IEEE
No reproduction or networking permitted without license from IHS
Not for Resale

values in the case of a multi-function relay. The 75% of rating requirement is consistent with other IEEE electrical environment standards for protective relays.

e) *Test procedure*. IEEE Std C37.90.3-2001 requires testing to coupling planes when the testing by direct application using the air discharge method does not produce a discharge. IEC 60255-22-2-1996 does not allow for the situation in which the equipment under test is insulated adequately to prevent a discharge.

f) *Test report*. IEC 60255-22-2-1996 includes no requirements for reporting test results. IEEE Std C37.90.3-2001 requires that the test report should be adequate to guide another person to duplicate the tests without having observed the original test program. IEEE C37.90.3-2001 also includes a list of typical items for inclusion in reports.

Copyright © 2001 IEEE. All rights reserved.

Copyright The Institute of Electrical and Electronics Engineers, Inc.
Provided by IHS under license with IEEE
No reproduction or networking permitted without license from IHS Not for Resale