IEEE Std C37.90.1-2002™
(Revision of IEEE Std C37.90.1-1989™)

IEEE Standards

C37.90.1™

IEEE Standard for Surge Withstand Capability (SWC) Tests for Relays and Relay Systems Associated with Electric Power Apparatus

IEEE Power Engineering Society

Sponsored by the
Power System Relaying Committee



Published by
The Institute of Electrical and Electronics Engineers, Inc.
3 Park Avenue, New York, NY 10016-5997, USA

31 May 2002

Print: SH94987
PDF: SS94987

Copyright The Institute of Electrical and Electronics Engineers, Inc.
Provided by IHS under license with IEEE
No reproduction or networking permitted without license from IHS

Not for Resale

IEEE Std C37.90.1-2002™
(Revision of
IEEE Std C37.90.1-1989™)

IEEE Standard for Surge Withstand Capability (SWC) Tests for Relays and Relay Systems Associated with Electric Power Apparatus

Sponsor

Power System Relaying Committee
of the
Power Engineering Society

Approved 21 March 2002

IEEE-SA Standards Board

Abstract: Two types of design tests for relays and relay systems that relate to the immunity of this equipment to repetitive electrical transients are specified. Test generator characteristics, test waveforms, selection of equipment terminals on which tests are to be conducted, test procedures, criteria for acceptance, and documentation of test results are described. This standard has been harmonized with IEC standards where consensus could be reached.
Keywords: fast transient test, oscillatory test, relay, relay systems, surge withstand capability

---

The Institute of Electrical and Electronics Engineers, Inc.
3 Park Avenue, New York, NY 10016-5997, USA

Copyright © 2002 by the Institute of Electrical and Electronics Engineers, Inc.
All rights reserved. Published 31 May 2002. Printed in the United States of America.

Print: ISBN 0-7381-3255-1 SH94987
PDF: ISBN 0-7381-3256-X SS94987

No part of this publication may be reproduced in any form, in an electronic retrieval system or otherwise, without the prior written permission of the publisher.

Copyright The Institute of Electrical and Electronics Engineers, Inc.
Provided by IHS under license with IEEE
No reproduction or networking permitted without license from IHS
Not for Resale

IEEE Standards documents are developed within the IEEE Societies and the Standards Coordinating Committees of the IEEE Standards Association (IEEE-SA) Standards Board. The IEEE develops its standards through a consensus development process, approved by the American National Standards Institute, which brings together volunteers representing varied viewpoints and interests to achieve the final product. Volunteers are not necessarily members of the Institute and serve without compensation. While the IEEE administers the process and establishes rules to promote fairness in the consensus development process, the IEEE does not independently evaluate, test, or verify the accuracy of any of the information contained in its standards.

Use of an IEEE Standard is wholly voluntary. The IEEE disclaims liability for any personal injury, property or other damage, of any nature whatsoever, whether special, indirect, consequential, or compensatory, directly or indirectly resulting from the publication, use of, or reliance upon this, or any other IEEE Standard document.

The IEEE does not warrant or represent the accuracy or content of the material contained herein, and expressly disclaims any express or implied warranty, including any implied warranty of merchantability or fitness for a specific purpose, or that the use of the material contained herein is free from patent infringement. IEEE Standards documents are supplied "**AS IS.**"

The existence of an IEEE Standard does not imply that there are no other ways to produce, test, measure, purchase, market, or provide other goods and services related to the scope of the IEEE Standard. Furthermore, the viewpoint expressed at the time a standard is approved and issued is subject to change brought about through developments in the state of the art and comments received from users of the standard. Every IEEE Standard is subjected to review at least every five years for revision or reaffirmation. When a document is more than five years old and has not been reaffirmed, it is reasonable to conclude that its contents, although still of some value, do not wholly reflect the present state of the art. Users are cautioned to check to determine that they have the latest edition of any IEEE Standard.

In publishing and making this document available, the IEEE is not suggesting or rendering professional or other services for, or on behalf of, any person or entity. Nor is the IEEE undertaking to perform any duty owed by any other person or entity to another. Any person utilizing this, and any other IEEE Standards document, should rely upon the advice of a competent professional in determining the exercise of reasonable care in any given circumstances.

Interpretations: Occasionally questions may arise regarding the meaning of portions of standards as they relate to specific applications. When the need for interpretations is brought to the attention of IEEE, the Institute will initiate action to prepare appropriate responses. Since IEEE Standards represent a consensus of concerned interests, it is important to ensure that any interpretation has also received the concurrence of a balance of interests. For this reason, IEEE and the members of its societies and Standards Coordinating Committees are not able to provide an instant response to interpretation requests except in those cases where the matter has previously received formal consideration.

Comments for revision of IEEE Standards are welcome from any interested party, regardless of membership affiliation with IEEE. Suggestions for changes in documents should be in the form of a proposed change of text, together with appropriate supporting comments. Comments on standards and requests for interpretations should be addressed to:

Secretary, IEEE-SA Standards Board
445 Hoes Lane
P.O. Box 1331
Piscataway, NJ 08855-1331
USA

Note: Attention is called to the possibility that implementation of this standard may require use of subject matter covered by patent rights. By publication of this standard, no position is taken with respect to the existence or validity of any patent rights in connection therewith. The IEEE shall not be responsible for identifying patents for which a license may be required by an IEEE standard or for conducting inquiries into the legal validity or scope of those patents that are brought to its attention.

The IEEE and its designees are the sole entities that may authorize the use of the IEEE-owned certification marks and/or trademarks to indicate compliance with the materials set forth herein.

Authorization to photocopy portions of any individual standard for internal or personal use is granted by the Institute of Electrical and Electronics Engineers, Inc., provided that the appropriate fee is paid to Copyright Clearance Center. To arrange for payment of licensing fee, please contact Copyright Clearance Center, Customer Service, 222 Rosewood Drive, Danvers, MA 01923 USA; +1 978 750 8400. Permission to photocopy portions of any individual standard for educational classroom use can also be obtained through the Copyright Clearance Center.

Copyright The Institute of Electrical and Electronics Engineers, Inc.
Provided by IHS under license with IEEE
No reproduction or networking permitted without license from IHS
Not for Resale

IEEE-SA Trademark Usage/Compliance Statement

Proper usage of the trademark **IEEE Std C37.90.1-2002™** is mandatory and is to be followed in all references of the Standard. The mark **IEEE®** is the registered trademark of the Institute of Electrical and Electronics Engineers, Inc., and must be used in bold type. It is to appear with the registered trademark symbol "®" the first time "**IEEE**" appears in the text. The use of "IEEE Std C37.90.1-2002" should include the trademark symbol "TM" (e.g., **IEEE Std C37.90.1-2002™**) at least the first time it is used in text, unless the number of the standard is also trademark registered (e.g., **802®**), then the symbol "®" must be used.

It is not permissible to use the standard number alone or with "**IEEE**" to indicate conformance or compliance with the associated standard. The user of the Standard should contact the Manager, Standards Licensing and Contracts for information concerning issues regarding indicating product compliance with an **IEEE** standard. To represent that a product has been designed to meet an **IEEE** standard, it is permissible to state that "the product has been engineered, designed or manufactured with the intent to meet the requirements of **IEEE Std C37.90.1-2002™**." However, it is ***not*** permissible to state or refer to a product as "**C37.90.1** compliant," "**C37.90.1** certified," "**IEEE C37.90.1** conformant," "**IEEE C37.90.1** certified," or the like, unless the user has obtained a Certification License from the IEEE.

Copyright © 2002 IEEE. All rights reserved.

Copyright The Institute of Electrical and Electronics Engineers, Inc.
Provided by IHS under license with IEEE
No reproduction or networking permitted without license from IHS
Not for Resale

Introduction

(This introduction is not part of IEEE Std C37.90.1-2002™ , IEEE Standard for Surge Withstand Capability (SWC) Tests for Relays and Relay Systems Associated with Electric Power Apparatus.)

Assurance is needed that electronic relays and relay systems will operate satisfactorily when installed in the harsh environment of a substation or switchyard. Standard surge tests will provide assurance that the relays and relay systems will withstand a specified surge level. The use of proper grounding and shielding techniques when installing the equipment will attenuate the actual surge level impinging on the equipment. However, even with proper grounding and shielding, surges may reach the equipment that are above the test levels specified in this standard. In such cases, the addition by the user of surge suppression devices external to the relay system may be required.

The first standard document to specify an SWC test was ANSI/IEEE Std C37.90a-1974/IEEE Std 472-1974 (redesignated ANSI/IEEE Std C37.90.1-1974), IEEE Guide for Surge Withstand Capability (SWC) Tests.

Experience with ANSI/IEEE Std C37.90.1-1974 was good, and in 1978 the guide was incorporated as section 9 of ANSI/IEEE Std C37.90-1978, IEEE Standard for Relays and Relay Systems Associated with Electric Power Apparatus. This meant that the oscillatory SWC test became a required test for relays and relay systems containing semiconducting devices.

From the beginning, it was realized that the oscillatory SWC test had limitations and did not adequately represent all conducted transients that may be experienced in substation environments. The need for a complementary test was recognized and the general type of test required was identified. The problem then became one of a search for a circuit that would produce a repeatable, controllable output. During the search, the IEC *showering arc* test was studied as well as a number of other tests proposed by various organizations. These were not chosen because they were not repeatable or controllable.

The combination of the fast transient SWC test and the oscillatory SWC test ensure that relays and relay systems will function at a level of immunity in the presence of conducted transients that occur in substations. The fast transient test was therefore incorporated into ANSI/IEEE Std C37.90.1-1989, because it is stable, easy to control, and can be performed in a minimum time and at a reasonable cost.

A working group was later assembled to harmonize ANSI/IEEE Std C37.90.1-1989 with corresponding IEC standards and to make the standard more understandable through clarifications and improvements to the document. This working group made extensive revisions such that one set of tests are necessary to reach closer harmonization with the corresponding IEC standards.

Participants

At the time this standard was approved, the working group had the following membership:

Jeffrey G. Gilbert, *Chair*

Jim Teague, *Vice Chair*

Jeff Burnworth	Jerry Johnson	Mario M. Ranieri
Jack Chadwick, Jr.	William C. Kotheimer	Mark S. Simon
Clifford Downs	John McConnell	Veselin Skendzic
William Higinbotham	Robert D. Pettigrew	John T. Tengdin

Copyright © 2002 IEEE. All rights reserved.

Copyright The Institute of Electrical and Electronics Engineers, Inc.
Provided by IHS under license with IEEE
No reproduction or networking permitted without license from IHS
Not for Resale

At the time this standard was approved, the members of the Relaying Practices and Consumer Interface Subcommittee were

Jeffrey G. Gilbert, *Chair*

A. P. Apostolov
Munnu Bajpai
B. L. Beckwith
John R. Boyle
Jeff Burnworth
Mark W. Carpenter
Jack Chadwick, Jr.
M. Clark
M. W. Conroy
Clifford Downs
Paul R. Drum
Irwin O. Hasenwinkle
S. H. Horowitz
James D. Huddleston, III
James W. Ingleson
M. Kezunovic
William C. Kotheimer
P. A. Kotos
E. Krizauskas
W. Lowe
William J. Marsh, Jr.
Michael J. McDonald
P. J. McLaren
M. Meisinger
B. Nelson
Robert D. Pettigrew
T. Phillippee
Mario M. Ranieri
M. S. Sachdev
Tarlochan Sidhu
Mark S. Simon
L. E. Smith
James E. Stephens
R. Sullivan
Malcolm J. Swanson
James Teague
J. S. Thorp
Demetrios A. Tziouvaras
Eric A. Udren
Y. Young
Stan E. Zocholl

The following members of the balloting committee voted on this standard. Balloters may have voted for approval, disapproval, or abstention.

Richard Angle
John Appleyard
Munnu Bajpai
Robert W. Beckwith
G. Benmouyal
Hubert Bilodeau
Stuart Borlase
Stuart H. Bouchey
John R. Boyle
James A. Bright
Daniel F. Brosnan
John F. Burger
Salvatore P. Carfagno
Mark W. Carpenter
Robert C. Carruth
Stephen P. Conrad
Robert L. Copyak
Douglas C. Dawson
Clifford Downs
Paul R. Drum
Patrick M. Duggan
Walter Elmore
James W. Evans
Ron J. Farquharson
W. E. Feero
Kenneth Fodero
Julian Forster
Jeffrey G. Gilbert
Mietek T. Glinkowski
Russell W. Gonnam
John Kenneth Greene
E. A. Guro
Robert W. Haas
Robert E. Hall
Irwin O. Hasenwinkle
Roger A. Hedding
Charles F. Henville
William Higinbotham
Jerry W. Hohn
John J. Horwath
James D. Huddleston, III
Chris R. Huntley
James W. Ingleson
K. J. Khunkhun
Joseph L. Koepfinger
William C. Kotheimer
William J. Marsh, Jr.
Michael J. McDonald
M. Meisinger
Gary L. Michel
Richard B. Miller
Dean H. Miller
Daleep C. Mohla
Charles J. Mozina
Brian Mugalian
George R. Nail
Arun G. Phadke
Alan C. Pierce
Mario M. Ranieri
Roger E. Ray
Radhakrishna V. Rebbapragada
Jesus Martinez Rodriguez
Miriam P. Sanders
Kenneth H. Sebra
Tarlochan Sidhu
Mark S. Simon
Veselin Skendzic
James E. Stephens
James E. Stoner
William M. Strang
Peter Sutherland
Malcolm J. Swanson
Glenn Swift
John H. Taylor
Richard P. Taylor
James Teague
John T. Tengdin
Stanley Thompson
Demetrios A. Tziouvaras
Joe T. Uchiyama
Eric A. Udren
Charles L. Wagner
Ronald M. Westfall
Philip B. Winston
Murty V. Yalla
John A. Zipp
Stan E. Zocholl
John A. Zulaski

Copyright © 2002 IEEE. All rights reserved.

Copyright The Institute of Electrical and Electronics Engineers, Inc.
Provided by IHS under license with IEEE
No reproduction or networking permitted without license from IHS
Not for Resale

When the IEEE-SA Standards Board approved this standard on 21 March 2002, it had the following membership:

James T. Carlo, *Chair*
James H. Gurney, *Vice Chair*
Judith Gorman, *Secretary*

Sid Bennett
H. Stephen Berger
Clyde R. Camp
Richard DeBlasio
Harold E. Epstein
Julian Forster*
Howard M. Frazier
Toshio Fukuda
Arnold M. Greenspan
Raymond Hapeman
Donald M. Heirman
Richard H. Hulett
Lowell G. Johnson
Joseph L. Koepfinger*
Peter H. Lips
Nader Mehravari
Daleep C. Mohla
Willaim J. Moylan
Malcolm V. Thaden
Geoffrey O. Thompson
Howard L. Wolfman
Don Wright

*Member Emeritus

Also included is the following nonvoting IEEE-SA Standards Board liaison:

Alan Cookson, *NIST Representative*
Satish K. Aggarwal, *NRC Representative*

Noelle D. Humenick
IEEE Standards Project Editor

Copyright © 2002 IEEE. All rights reserved.
Copyright The Institute of Electrical and Electronics Engineers, Inc.
Provided by IHS under license with IEEE
No reproduction or networking permitted without license from IHS
Not for Resale

Contents

1. Overview 1

1.1 Scope 1
1.2 Purpose 1

2. References 1

3. Definitions 2

4. Test wave shapes 3

4.1 Oscillatory waveform (see Figure 1) 3
4.2 Fast transient test waveform (see Figure 2) 3

5. Test generator characteristics 5

5.1 Oscillatory SWC test 5
5.2 Fast transient SWC test 5
5.3 Common characteristics for all SWC test generators 6
5.4 Verification of test generator characteristics 6

6. Equipment to be tested 7

6.1 Test intent 7
6.2 System 7
6.3 Application 8
6.4 Protective relay communications equipment 8
6.5 Test points 9

7. Application of test wave 9

7.1 External connection groups 9
7.2 Point of application of tests 9
7.3 Conditions of test 9

8. Test procedures 14

8.1 Test types 14
8.2 Common mode tests 14
8.3 Transverse mode tests 14

9. Criteria for acceptance 15

9.1 Application of criteria 15
9.2 Conditions to be met 15
9.3 Equipment functioning 16
9.4 Exceptions 16

10. Test records 16

Copyright © 2002 IEEE. All rights reserved.

Copyright The Institute of Electrical and Electronics Engineers, Inc.
Provided by IHS under license with IEEE
No reproduction or networking permitted without license from IHS
Not for Resale

Annex A (normative) Verification of test generator characteristics 17

Annex B (informative) Test waveform delivery 21

Annex C (informative) Balanced/unbalanced transformer impedance matching network examples 23

Annex D (informative) Communication interface equipment and communication system equipment 25

Annex E (informative) Comparison with IEC 60255-22-1 (1988-05) and IEC 60255-22-4 (1992-03) 31

Annex F (informative) Bibliography 33

--`,,`-`-`,,`,,`,`,,`---

Copyright © 2002 IEEE. All rights reserved.

Copyright The Institute of Electrical and Electronics Engineers, Inc.
Provided by IHS under license with IEEE
No reproduction or networking permitted without license from IHS

Not for Resale

IEEE Standard for Surge Withstand Capability (SWC) Tests for Relays and Relay Systems Associated with Electric Power Apparatus

1. Overview

1.1 Scope

This standard specifies design tests for relays and relay systems that relate to the immunity of this equipment to repetitive electrical transients. Two types of tests are specified. The oscillatory and fast transient SWC tests are defined as distinct tests. However, it is not intended to prohibit a combined test, provided all requirements of the individual SWC tests are met.

The application of SWC tests to equipment other than relays and relay systems is the responsibility of those specifying the testing.

1.2 Purpose

The purpose of this standard is to establish a common and reproducible basis for evaluating the performance of relays and relay systems when subjected to repetitive transients on supply, signal, control, and communication lines or connections. This standard is to establish that an evaluation is performed during both normal (non-tripped) and abnormal (tripped) relay operating conditions.

2. References

This standard shall be used in conjunction with the following publications. If the following publications are superseded by an approved revision, the revision shall apply.

ANSI C93.5-1997, American National Standard Requirements for Single Function Power-Line Carrier Transmitter/Receiver Equipment.[1]

[1]ANSI publications are available from the Sales Department, American National Standards Institute, 25 West 43rd Street, 4th Floor, New York, NY 10036, USA (http://www.ansi.org/).

Copyright © 2002 IEEE. All rights reserved.

Copyright The Institute of Electrical and Electronics Engineers, Inc.
Provided by IHS under license with IEEE
No reproduction or networking permitted without license from IHS
Not for Resale

IEEE C37.100-1992™ (Reaff 2001), IEEE Standard Definitions for Power Switchgear.[2]

3. Definitions

Certain terms, defined below, are used in surge testing and to identify parts of a relay system. Other terms used are defined elsewhere, for example in *The Authoritative Dictionary of IEEE Standards Terms*, Seventh Edition [B4] or IEEE Std C37.100-1992™ .[3]

3.1 calibration: The adjustment of a device to have the designed operating characteristics, and the subsequent marking of the positions of the adjusting means, or the making of adjustments necessary to bring operating characteristics into substantial agreement with standardized scales or marking.

3.2 common (longitudinal)-mode voltage: The voltage common to all conductors of a group as measured between that group at a given location and an arbitrary reference (usually earth).

3.3 communications interface equipment: A portion of a relay system that transmits or receives information from a communications system; e.g., audio tone equipment or carrier transmitter-receiver included as an integral part of the relay system.

3.4 communications system: Any system that transfers protection or other data to or from the relay interface to or from another location.

3.5 current circuit: An input circuit to which is applied a voltage or a current that is a measure of primary current. Current inputs less than 100 mA shall be treated as a signal circuit. (*See:* **signal circuit**)

3.6 digital data circuit: Any circuit that transfers data in a digitally encoded form that is essential for the proper operation of the relay system.

3.7 input circuit: Circuits with the primary intended function of sensing logical state data, such as circuit breaker position or interlocking commands between relays.

3.8 measuring unit: Any analog or digital device that analyzes input currents or voltages or both to produce an output to the relay logic.

3.9 normal tolerance: Accuracy of the equipment, specified by the manufacturer as a numeric or percentage *plus or minus* variation. Tolerances may be general or specific to a given application.

3.10 output circuit: A circuit from a relay system that exercises direct or indirect control of power apparatus such as tripping or closing of a power circuit breaker.

3.11 output: Outputs convey a state of the equipment under test. They may include: electrical outputs such as contacts or trip pulses, mechanical outputs such as targets, visual outputs such as indicating lights or LEDs, audio outputs such as bells or buzzers, message outputs in digital or analog form, protective communication signals, and data communication signals in analog or digital form.

3.12 power supply circuit: An input circuit to a relay system that supplies power for the functioning of the relay system.

---

[2]IEEE publications are available from the Institute of Electrical and Electronics Engineers, 445 Hoes Lane, P.O. Box 1331, Piscataway, NJ 08855-1331, USA (http://standards.ieee.org/).

[3]The numbers in brackets correspond to those of the bibliography in Annex F.

Copyright © 2002 IEEE. All rights reserved.

Copyright The Institute of Electrical and Electronics Engineers, Inc.
Provided by IHS under license with IEEE
No reproduction or networking permitted without license from IHS
Not for Resale

3.13 relay interface equipment: An assembly that connects a relay system to other equipment, i.e., carrier equipment or instrument transformers. This assembly does not need to be located in the vicinity of the rest of the relay system.

3.14 relay logic: A logic network that coordinates the output of measuring units and other inputs to energize output circuits when prescribed conditions and sequences have been met.

3.15 relay system: An assembly usually consisting of current and voltage circuits, measuring units, logic, and power supplies to provide a specific relay scheme, such as line, transformer, bus, or generator protection. A relay system may include connections to other systems, such as data logging, alarm, communications, or other relay systems.

3.16 signal circuit: Any circuit other than a power supply circuit or an output circuit whose maximum voltage is less than 50 V and maximum current is less than 100 mA.

3.17 surge ground: The point of external connection to the relay system reference or common bus for surge protection.

3.18 transverse (differential)-mode voltage: The voltage between two conductors of a circuit at a given location.

3.19 voltage circuit: An input circuit to which is applied a voltage or a current that is a measure of primary voltage. Voltage inputs less than 50 V shall be treated as signal circuits. (*See:* **signal circuit**)

4. Test wave shapes

4.1 Oscillatory waveform (see Figure 1)

The test voltage parameters for an open circuit generator condition at the generator terminals shall be

a) **Waveform envelope:** A damped oscillatory wave, with the envelope decaying to 50% of peak value between the third and sixth periods.

b) **Frequency:** 1 MHz (tolerance ± 10%)

c) **Rise time of first peak:** 75 ns (tolerance ± 20%), as measured between 10% and 90% of the peak value.

d) **Test voltage magnitude:** Initial crest of 2.5 kV for common mode tests and for transverse tests (tolerance + 0 / – 10%).

e) **Repetition rate:** 6–10 bursts per period of the power system frequency. Bursts shall be nonsynchronous with the power system frequency.

f) **Duration:** 2 seconds (tolerance + 10% / – 0%). For relays with an operating time greater than 2 seconds, it is recommended that the test be carried out with a minimum time setting. In such cases, the period of application of the test signal shall be at least as long as the operating time of the relay under test.

g) **Source impedance:** 200 Ω resistive at 1 MHz (tolerance ± 20%).

4.2 Fast transient test waveform (see Figure 2)

The test voltage parameters for an open circuit generator condition at the generator terminals shall be

Copyright © 2002 IEEE. All rights reserved.

Copyright The Institute of Electrical and Electronics Engineers, Inc.
Provided by IHS under license with IEEE
No reproduction or networking permitted without license from IHS
Not for Resale

a) **Waveform polarity:** Positive and negative

b) **Rise time:** 5 ns (tolerance ± 30%)

c) **Magnitude:** 4 kV crest value (tolerance ± 10%)

d) **Pulse duration:** 50 ns (tolerance ± 30%) (50% value)

e) **Repetition rate:** The waveform consists of bursts of pulses that repeat periodically.

1) *Burst duration:* 15 ms (tolerance ± 20%)

2) *Repetition rate during bursts:* 2.5 kHz (tolerance ± 20%)

3) *Burst period:* 300 ms (tolerance ± 20%)

f) **Duration:** Not less than 1 minute, each polarity

g) **Source impedance:** 50 Ω (tolerance ± 20%) between 1 MHz and 100 MHz

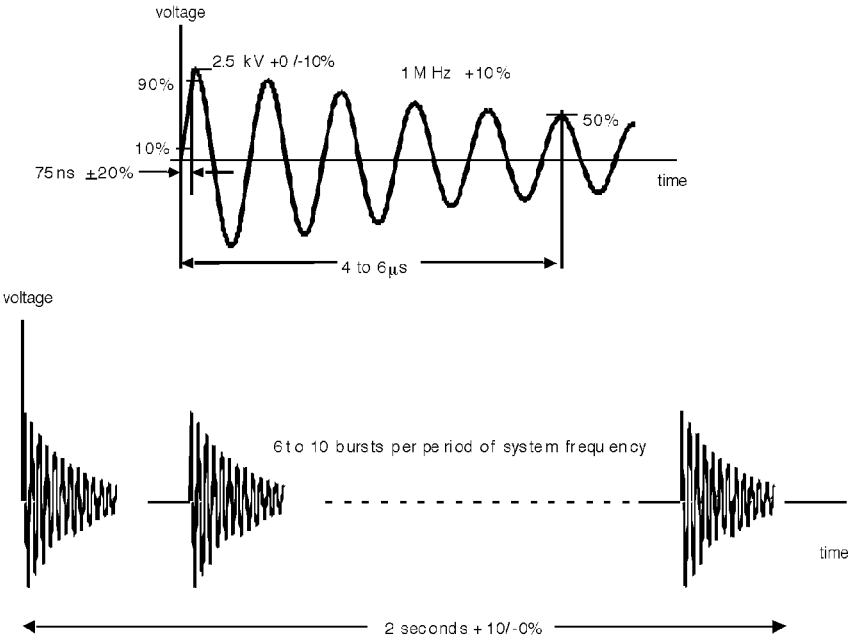

Figure 1—Oscillatory test waveform

Copyright © 2002 IEEE. All rights reserved.

Copyright The Institute of Electrical and Electronics Engineers, Inc.
Provided by IHS under license with IEEE
No reproduction or networking permitted without license from IHS
Not for Resale

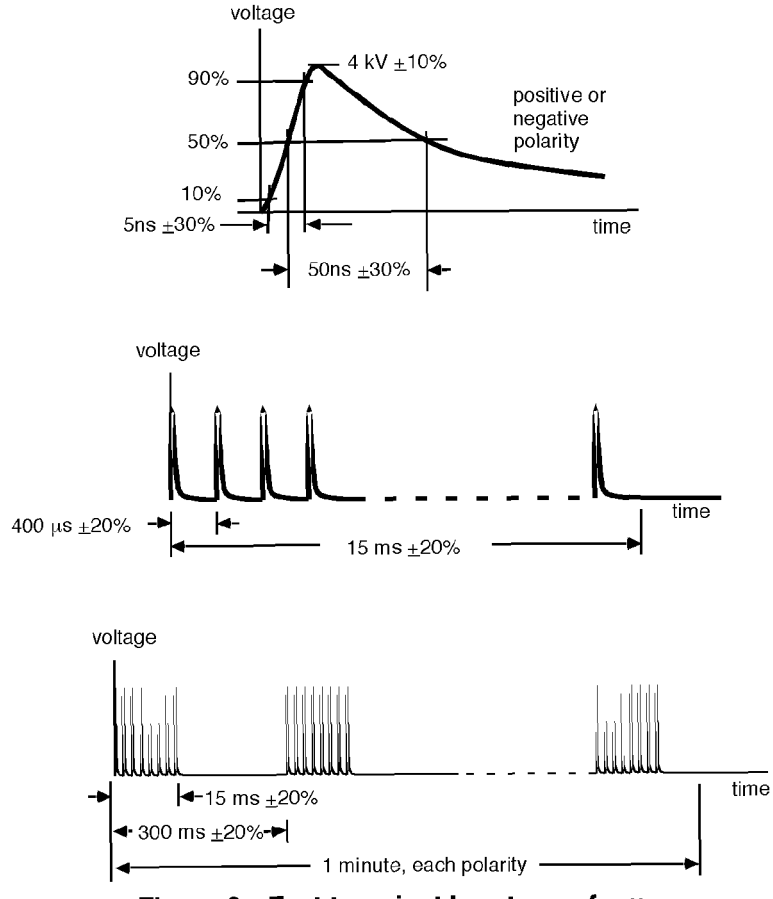

Figure 2—Fast transient burst waveform

5. Test generator characteristics

5.1 Oscillatory SWC test

5.1.1 Generator output

The test generator shall be capable of producing the output test voltage waveform as described in 4.1. It shall also meet the requirements of 4.1 regarding frequency, rise time, magnitude, repetition rate, test burst duration, and source impedance.

5.1.2 Additional requirements

The generator shall also meet the requirements listed in 5.3.

5.2 Fast transient SWC test

5.2.1 Generator output

The test generator shall be capable of producing the output test voltage waveform as described in 4.2. It shall also meet the requirements of 4.2 regarding polarities, rise time, magnitude, repetition rate, test burst duration, and source impedance.

Copyright © 2002 IEEE. All rights reserved.

Copyright The Institute of Electrical and Electronics Engineers, Inc.
Provided by IHS under license with IEEE
No reproduction or networking permitted without license from IHS Not for Resale

5.2.2 Additional requirements

The generator shall also meet the requirements listed in 5.3.

5.3 Common characteristics for all SWC test generators

5.3.1 Low frequency and dc blocking

The test generator shall have an internal blocking capacitor of 0.1μF to allow application of the test to live relay input and output circuits without shorting or overloading the relay ac signal source or dc supply source during SWC testing.

5.3.2 Coupling/decoupling network

A suitable network shall be included external to the test generator to couple the test voltage to the relay and to prevent the SWC test voltage being propagated back into the relay ac signal source.

5.3.3 Safety ground

The test generator shall have a dedicated safety ground connector terminal.

5.3.4 Test mode capability

The generator shall be capable of providing a common mode output voltage with one output terminal grounded, and a balanced transverse mode output voltage where both output terminals are floating.

5.4 Verification of test generator characteristics

It is necessary to establish a simple test procedure intended to verify and document the SWC generator performance prior to its use for these tests. Two verification tests shall be defined:

a) SWC waveform validity tests

b) SWC test generator performance verification

The detailed test description is given in Annex A.

5.4.1 Waveform validity tests

The waveform validity tests shall be performed before and after each SWC test session, with the results recorded and included with the SWC test report. The tests described in A.2. are intended to verify that there is no major insulation breakdown, damage, or test system component failure that may have occurred during the physical test setup, test application, or prolonged instrument storage. The waveform validity tests shall include

a) Measuring system feedthrough test

b) Oscillatory SWC test generator open circuit voltage waveform test

c) Fast transient SWC test generator open circuit voltage waveform test

Measurement methods different from those described in the Annex A are acceptable, as long as the same level of precision and the same parameters are used to document the results.

Copyright © 2002 IEEE. All rights reserved.

Copyright The Institute of Electrical and Electronics Engineers, Inc.
Provided by IHS under license with IEEE
No reproduction or networking permitted without license from IHS Not for Resale

5.4.2 SWC test generator performance verification

A full set of SWC test generator characteristics shall be verified as per manufacturer's recommendations or at least once every year, with the test results dated, recorded, and included with each SWC test report. These tests are intended to precisely document the test generator characteristics and are used to track the SWC generator's compliance with this standard. The characteristics to be verified are given in Table 1.

Table 1—Test generator characteristics to be verified

Fast transient	Oscillatory waveform
Rise time	Rise time of the first peak
Peak voltage level (no load)	Peak voltage level (no load)
Output impedance	Output impedance
Impulse duration	Waveform envelope decay
n/a	Oscillation frequency
Repetition rate during the burst	Repetition rate
Burst duration	n/a
Burst period	n/a
Test duration	Test duration

All performance verification measurements shall be preceded by conducting an SWC waveform validity test described in A.2.

Measurement methods different from those described in the Annex A are acceptable, as long as the same level of precision and the same parameters are used to document the results.

6. Equipment to be tested

6.1 Test intent

The tests described herein are design tests to be applied to any part of the relay system that can be exposed to conducted or coupled transients under normal installed operating conditions. It is not the intent of these tests to test an isolated subassembly of the relay system unless that subassembly can be used independently and located more than 2 m from the rest of the relay system.

Prefabricated wiring harnesses, connectors, or shelf wiring shall not be disrupted.

6.2 System

The composition of a relay system will vary from a single relay mounted on a panel to several pieces of equipment integrated into a single relay system. A relay system may also include communications interface equipment, such as a carrier transmitter/receiver or audio tone equipment.

Copyright © 2002 IEEE. All rights reserved.

Copyright The Institute of Electrical and Electronics Engineers, Inc.
Provided by IHS under license with IEEE
No reproduction or networking permitted without license from IHS Not for Resale

6.3 Application

These type tests are applied to samples built to the final design using production methods. It is the intent of these tests to prove that a given production relay system can operate satisfactorily without component failure and without misoperating when subjected to the transients defined in this standard.

6.4 Protective relay communications equipment

All equipment for the purpose of interfacing and transporting the protective relay logic signal is to be tested. See Table 2 for specific points of application.

The manufacturer shall state which interfaces comply with this standard. The manufacturer shall state the application method and what form of acceptance criteria was used, for each interface, in these tests.

Some communications system equipment may have both relay protection and general communications facilities. When a device has not been specifically engineered for relay protection, or several pieces of equipment are involved, it may be difficult to apply these type tests and assure proper protection performance. Each piece of equipment may meet this standard when tested separately or may only pass when connected as a system. In these cases, the equipment should be tested as close as possible to the intended application and the user should work closely with the manufacturers with the intention of having a system that performs reliably in the substation.

Table 2—Test requirements for relay communication equipment

System port	Communications interface equipment	Communications system equipment
Power supply inputs	Mandatory	Mandatory
Input circuits/outputs circuits	Mandatory	Mandatory
Data communications carrying relay logic signals	Mandatory	Mandatory
Data communications not carrying relay logic signals	Mandatory	Mandatory (see 6.4.1)
Signal circuits	Mandatory	Mandatory (see 6.4.1)
Power line carrier RF ports (see 6.4.3)	Not required	Not required
Temporary communications ports (see 6.4.2)	Not required	Not required

6.4.1 Signal circuits and data communication ports

The acceptance criteria are listed in Clause 9.

6.4.2 Communication ports not permanently connected during normal operation

Testing is not required for ports that are intended for use only during installation or maintenance and are not permanently connected during normal operation.

6.4.3 RF inputs and outputs of power line carrier

Testing of power line carrier RF inputs and outputs is addressed by ANSI C93.5-1997. Consequently, IEEE Std C37.90.1-2002™ does not require power line carrier RF inputs and outputs to be subjected to SWC tests.

Copyright © 2002 IEEE. All rights reserved.

Copyright The Institute of Electrical and Electronics Engineers, Inc.
Provided by IHS under license with IEEE
No reproduction or networking permitted without license from IHS
Not for Resale

6.5 Test points

After the relay system is defined, all points of connection between the relay system and external circuits shall be tested.

7. Application of test wave

7.1 External connection groups

All external connections to the relay system shall be considered in one of the following seven groups, as defined in Clause 3:

a) Current
b) Voltage
c) Power supply
d) Inputs
e) Outputs
f) Digital data
g) Signal circuit

7.2 Point of application of tests

The test voltage shall be applied to the respective external connection groups in common or transverse mode according to Clause 8.

7.3 Conditions of test

The tests shall be made under usual service conditions in accordance with IEEE Std C37.90-1989™ [B5]. Typical test setups for small and large equipment are shown in Figure 3 and Figure 4, respectively.

7.3.1 Partial simulation

If the relay is part of a system, or can be connected to auxiliary equipment, then the relay shall be tested while connected to a representative configuration of auxiliary equipment necessary to exercise the circuits. The requirements of this standard shall include any external protection devices or special installation procedures clearly specified in the manufacturer's instruction manual, unless expressly waived by the manufacturer. Any auxiliary equipment, external protection devices, or special installation procedures included in the tests shall be documented.

7.3.2 Coupling to test generator

Application of the test wave to the relay under test shall be done using coupling/isolating networks or capacitive coupling clamps as described following.

Copyright © 2002 IEEE. All rights reserved.

Copyright The Institute of Electrical and Electronics Engineers, Inc.
Provided by IHS under license with IEEE
No reproduction or networking permitted without license from IHS
Not for Resale

7.3.2.1 Coupling/isolating networks

Figure 5 and Figure 6 show common and transverse mode connections where isolation from a normal current or voltage source is required. This method shall be used when testing current, voltage, power supply, input circuit, or output external connection groups.

7.3.2.2 Capacitive coupling clamp

The capacitive coupling clamp is intended as a means for coupling test waveforms to shielded and other circuits where direct galvanic connection to the equipment under test (EUT) terminals may impair operation. Typical use of the clamp for common mode tests is shown in Figure 7. The use of the capacitive clamp shall be limited to those indicated in Table 3 and Table 4.

The capacitive clamp consists of two conductive surfaces (made of galvanized steel, brass, copper, or aluminum) insulated from each other by means of high quality insulating supports. Figure 8 shows construction details of the clamp. The coupling effect is established by placing an insulated cable (feeding the signals to the device under test) through the V-shaped duct on top of the clamp, and subsequently closing the clamp as much as possible in order to maximize the coupling capacitance between the clamp and the cable.

The lower conductive surface of the clamp shall be placed on (and solidly connected to) a ground plane with a minimum area of 1 m^2. The reference ground plane shall extend beyond the clamp by at least 0.1 m on all sides.

The high voltage coaxial connector intended for connection to the test generator may, for convenience, be provided on both ends of the clamp. Regardless of the design however, during the test, the generator shall be connected to that end of the clamp that is nearest to the device under test.

Due to high voltages involved, the external insulation on the cable to which the transients are being coupled must be capable of withstanding a 5 kV 1.2/50 μs pulse.

7.3.3 Reference ground plane

A reference ground plane shall be used to get reproducible capacitive coupling conditions. The ground plane shall consist of a metallic sheet (copper or aluminum) of at least 0.25 mm thickness. It shall have a minimum size of 1 × 1 m or project beyond the external dimensions of the relay by at least 0.1 m on all sides, whichever is greater. The reference ground plane shall be connected to ground.

7.3.4 Relay placement

The relay shall be tested in its case above a ground reference plane placed on top of a nonconductive table approximately 0.8 m high. The relay shall be isolated from the ground reference plane by an insulating support 0.5 mm thick. Floor standing equipment shall be placed on the reference ground plane with the interposition of an insulating support, 0.1 m thick, such as dry wood.

7.3.5 Wiring connections

Wiring to the relay shall be consistent with the manufacturer's recommended procedures. When there are no recommendations given by the manufacturer, all parts to be grounded shall be connected with copper straps of at least 20 mm width through the shortest possible distance to the ground plane. Cables interconnecting the various external circuits of the relay under test shall be kept at a distance of at least 0.1 m from the ground plane. Leads from the coupling/isolating network to the relay or the test generator shall be no longer than 1 m. When using the capacitive coupling clamp, the leads from the relay shall be extended by 1 m to allow placement along the full length of the coupling plates. The minimum distance between the coupling plates and all conductive structures other than the ground plane shall be 0.5 m.

 Copyright © 2002 IEEE. All rights reserved.

Copyright The Institute of Electrical and Electronics Engineers, Inc.
Provided by IHS under license with IEEE
No reproduction or networking permitted without license from IHS Not for Resale

7.3.6 Voltage and current values

It is the intent of this test to duplicate as nearly as possible in-service conditions with the relay in its normal nontransitional state. Where appropriate, the relay system shall be energized with rated voltage and with current equal to 75% of the nominal rating. The relay settings shall be chosen such that the relay is as close as possible to its transitional state, but not closer than the recommended margins for its application function. Input voltage to power supply circuits shall be within specified limits.

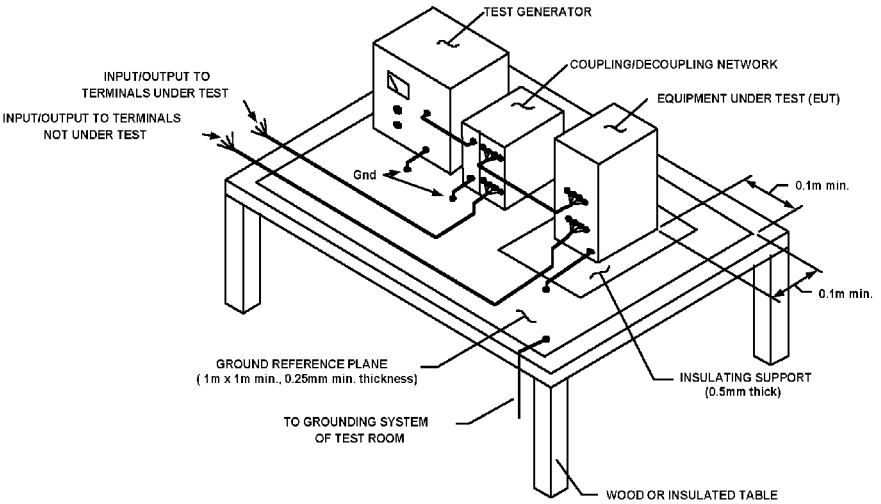

Figure 3—Example of test setup for small equipment

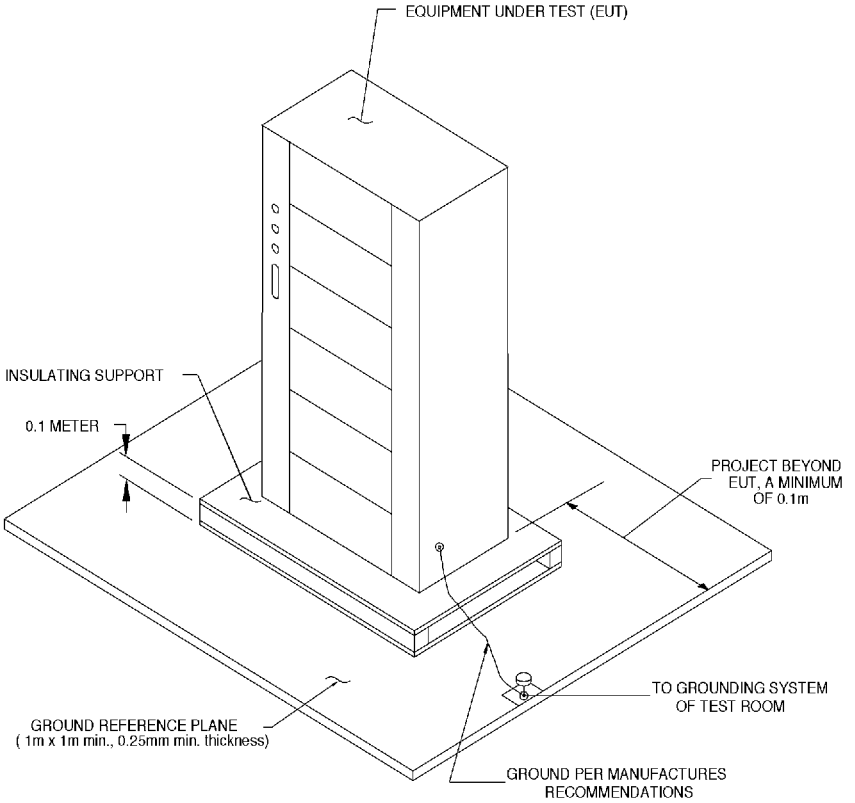

Figure 4—Example of test setup for large equipment

Copyright © 2002 IEEE. All rights reserved.

Copyright The Institute of Electrical and Electronics Engineers, Inc.
Provided by IHS under license with IEEE
No reproduction or networking permitted without license from IHS
Not for Resale

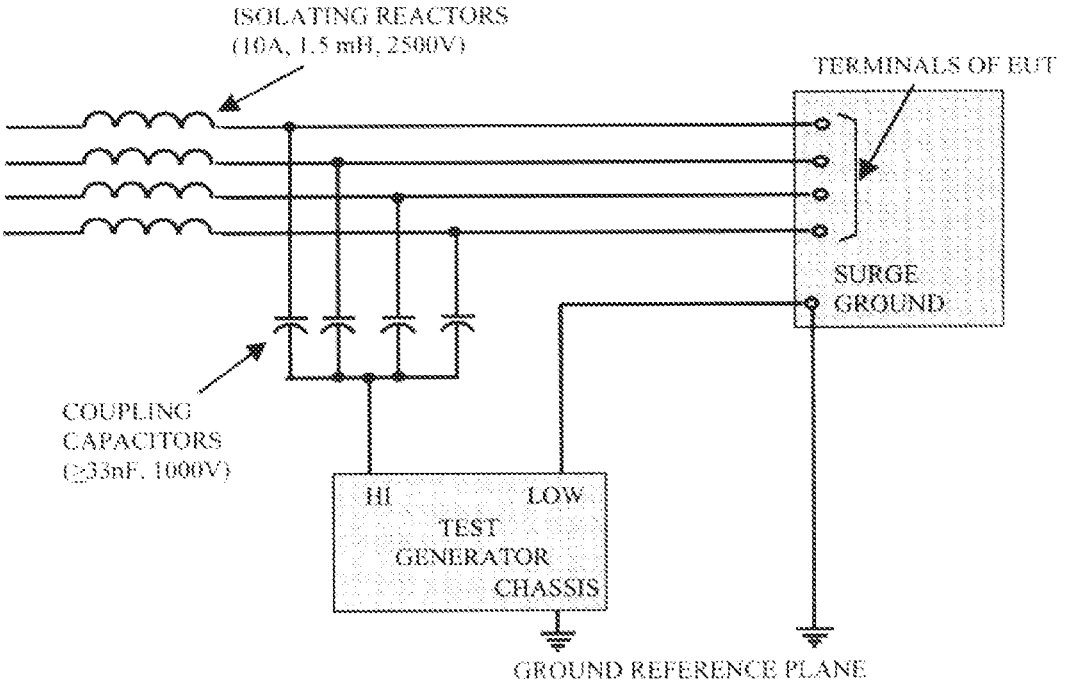

Figure 5—Application of common mode tests using coupling/isolating network

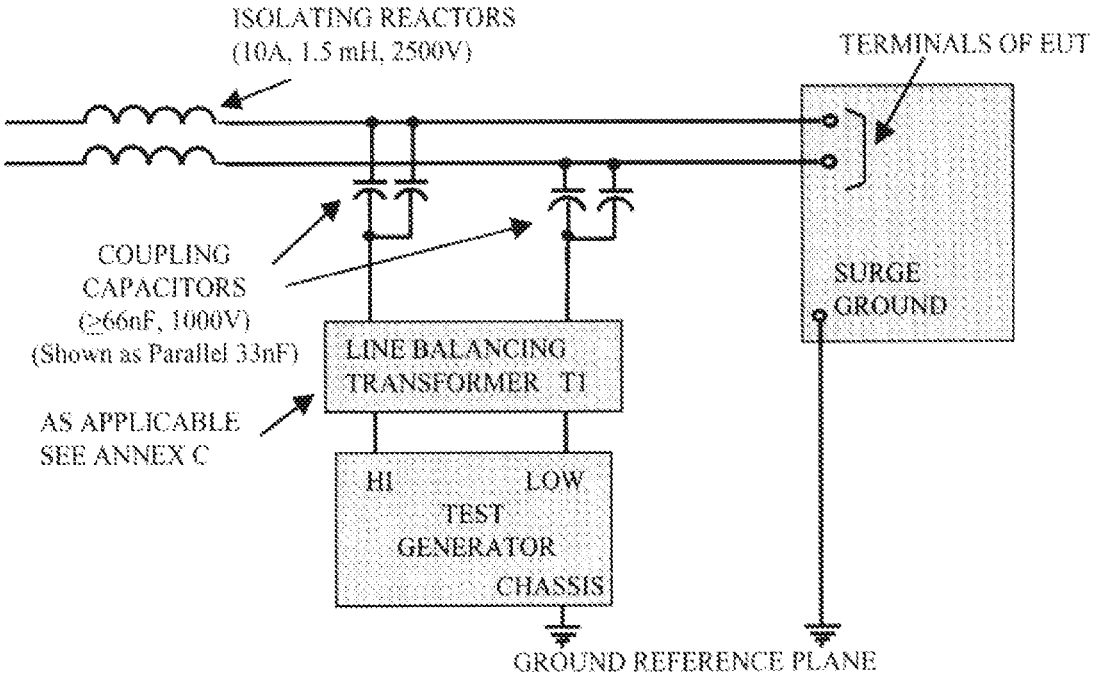

Figure 6—Application of transverse mode tests using coupling/isolating network

Copyright © 2002 IEEE. All rights reserved.

Copyright The Institute of Electrical and Electronics Engineers, Inc.
Provided by IHS under license with IEEE
No reproduction or networking permitted without license from IHS
Not for Resale

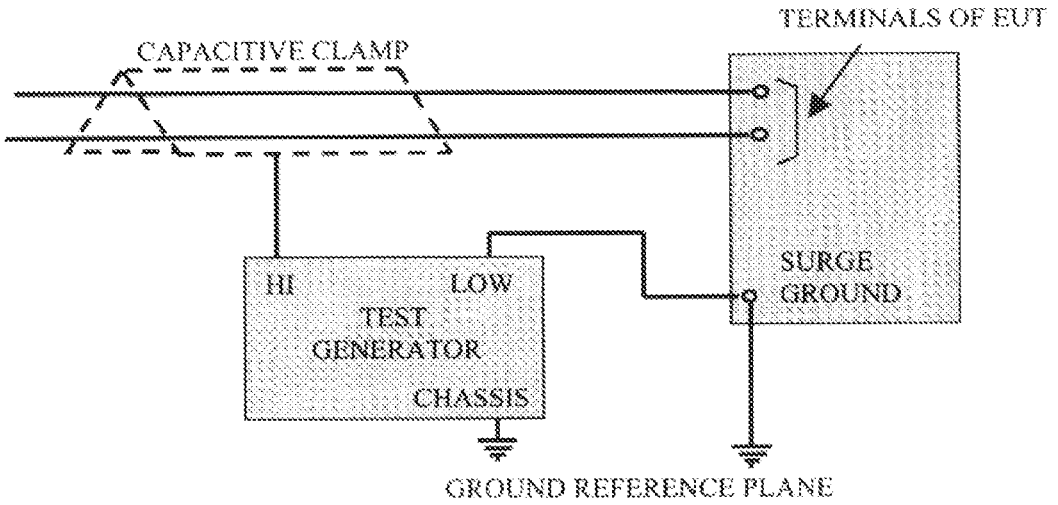

Figure 7—Application of common mode tests using capacitive coupling clamp

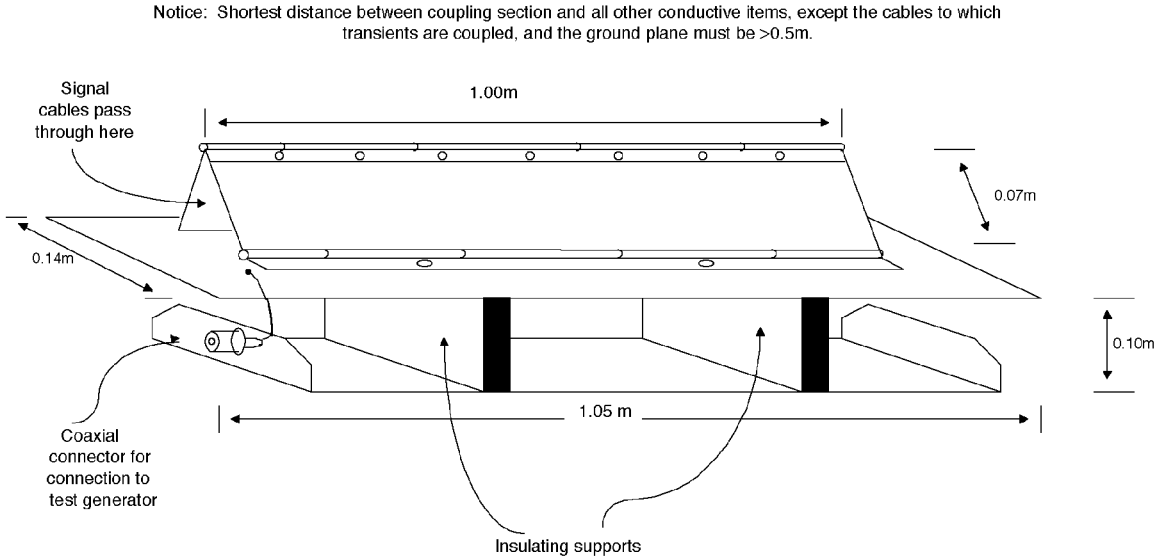

Figure 8—Capacitive coupling clamp

Copyright © 2002 IEEE. All rights reserved.

Copyright The Institute of Electrical and Electronics Engineers, Inc.
Provided by IHS under license with IEEE
No reproduction or networking permitted without license from IHS
Not for Resale

8. Test procedures

8.1 Test types

The test waves described in 4.1 and 4.2 shall be applied to each external connection group using common and transverse modes as shown in Table 3 and Table 4. The voltage of the test waveforms shall be as defined by Table 3 and Table 4 unless specifically marked otherwise on the relay product or associated manufacturer's instruction manual. The relay system connections for the fast transient wave shapes shall be subjected to both polarities.

8.2 Common mode tests

The intent of this test is to expose an external connection group to a surge referenced to earth ground. One terminal of the test generator shall be connected to the external connection group to be tested using the coupling/isolating network as shown in Figure 5, or capacitive coupling clamp as shown in Figure 7. The other terminal of the test generator shall be connected to ground.

8.3 Transverse mode tests

The intent of this test is to expose each pair of a given external connection group to a surge across its terminals. One terminal of the test generator shall be connected to one external connection, or logical group of connections, and the other terminal of the test generator shall be connected to another external connection of a pair or logical group as shown in Figure 6. The test shall be repeated for other pairs until each pair has been tested.

Table 3—Test modes and voltage for each external connection group—oscillatory test

External connection group	Test modes		Oscillatory test Voltage to be applied
	Common	Transverse	
Current	Yes	No	2.5 kV
Voltage	Yes	Yes	2.5 kV
Power supply	Yes	Yes	2.5 kV
Input circuit	Yes	Yes	2.5 kV
Output	Yes	Yes	2.5 kV
Data communications	Yes	No	2.5 kV[a]
Signal circuit	Yes	No	2.5 kV[a]

[a]Applied through capacitive coupling clamp.

Copyright © 2002 IEEE. All rights reserved.

Copyright The Institute of Electrical and Electronics Engineers, Inc.
Provided by IHS under license with IEEE
No reproduction or networking permitted without license from IHS
Not for Resale

Table 4—Test modes and voltage for each external connection group—fast transient test

External connection group	Test modes		Fast transient test Voltage to be applied
	Common	Transverse	
Current	Yes	No	4 kV
Voltage	Yes	Yes	4 kV
Power supply	Yes	Yes	4 kV
Input circuit	Yes	Yes	4 kV
Output	Yes	Yes	4 kV
Data communications	Yes	No	4 kV[a]
Signal circuit	Yes	No	4 kV[a]

[a]Applied through capacitive coupling clamp.

9. Criteria for acceptance

9.1 Application of criteria

The criteria below shall apply to the equipment being directly tested and any devices linked to the equipment via direct or remote connections. Examples of the connections are current loops and voltage circuits (dc, audio, carrier, or microwave). Serial, parallel, optical (fiber or infrared), and radio frequency connections apply as well.

9.2 Conditions to be met

The equipment shall be considered to have passed the SWC tests if—during, or as a result of, the tests—all of the conditions following are met for the equipment and the connected devices:

a) The specified performance of the equipment, including the operating time, does not change beyond stated tolerances.
b) No hardware damage occurs.
c) No change in calibration beyond normal tolerances results.
d) No loss or corruption of stored memory or data, including active or stored settings, occurs.
e) System resets do not occur, and manual resetting is not required.
f) Established communications not affecting protection functions recover within the manufacturer's time period, if disrupted.
g) Communications errors, if they occur, do not jeopardize the protective functions.
h) No loss of digital pulse synchronization occurs or where the loss of digital pulse synchronization does occur, it shall not produce an out of tolerance condition.
i) No changes in the states of the electrical, mechanical, or communication status outputs occur. This includes alarms, status outputs, or targets.

Copyright © 2002 IEEE. All rights reserved.

Copyright The Institute of Electrical and Electronics Engineers, Inc.
Provided by IHS under license with IEEE
No reproduction or networking permitted without license from IHS Not for Resale

j) No erroneous, permanent change of state of the visual, audio, or message outputs results. Momentary changes of these outputs during the tests are permitted.

k) No error outside normal tolerances of the data communication signals (SCADA analogs) occurs.

9.3 Equipment functioning

During and after the tests, the equipment and the connected devices shall be completely and accurately functional as designed, unless otherwise stated by the manufacturer, for the equipment to be considered as having passed the SWC tests.

9.4 Exceptions

Exceptions to the acceptance criteria pertinent to the equipment shall be stated in the specifications of the equipment.

10. Test records

The test program shall be recorded and made available upon request. The report shall be adequate to guide another person to duplicate the test program. The record shall include the following:

a) Product model and revision number for the product under test (serial number if applicable)

b) Details of product settings, inputs, and operating conditions for each individual test

c) Diagrams, schematics, or photographs showing the device under test, any externally connected equipment, and related cabling.

d) Description of the SWC test generator and its calibration date and of the coupling networks used

e) Waveform validity test results per A.2.

f) A tabulation for each test performed. The tabulation of each test shall include the following

   1) A list of each point that is electrically connected to the SWC test generator and/or coupling networks, with reference to schematics or diagrams as necessary. The list shall include the method of coupling for each point tested.

   2) The settings of the SWC test generator for the particular test, for example, the voltage level, whether the test is oscillatory or fast transient, etc.

   3) A description of how the device under test was monitored to ensure that any failure was detected; that is, which output lines, indicators, or other features of the device under test were monitored.

   4) The test results.

Copyright © 2002 IEEE. All rights reserved.

Copyright The Institute of Electrical and Electronics Engineers, Inc.
Provided by IHS under license with IEEE
No reproduction or networking permitted without license from IHS
Not for Resale

Annex A

(normative)

Verification of test generator characteristics

A.1 Measuring system requirements

All tests are performed using a wide bandwidth digital oscilloscope with a suitable wide bandwidth voltage divider (shielded high voltage probe, a high voltage coaxial attenuator, or the current probe-based alternative scheme described in A.4) intended to reduce the measured generator output voltage to a level that can be safely applied to the oscilloscope input. The voltage calibration and transient response of the measuring system shall be verified prior to measuring the generator output. For the oscillatory SWC test generator, the measuring system shall have a frequency bandwidth of 50 MHz or better. For the fast transient SWC test generator, the measuring system shall have a frequency bandwidth of at least 500 MHz.

A.2 SWC waveform validity tests

The waveform validity tests shall be performed before and after each SWC test session, with the results recorded and included with the SWC test report. These tests are intended to verify that there is no major insulation break down, damage, or component failure that may have occurred during the physical test setup, test application, or prolonged instrument storage between the test sessions. The waveform validity tests shall include

- Measuring system feedthrough test
- Oscillatory SWC test generator open circuit voltage waveform test
- Fast transient SWC test generator open circuit voltage waveform test

A.2.1 Measuring system feedthrough test

This test is performed by shorting the high voltage input of the voltage divider to ground and connecting this point to the SWC test generator output ground terminal. Then with the test generator operating at maximum voltage output, the oscilloscope waveform display should not deviate from a straight horizontal line more than 1% of the generator output voltage. This test verifies that there is a minimum of extraneous voltage pickup in the measuring system. For feedthrough check, the oscilloscope setting for vertical and horizontal calibration should be the same as stated in the sections below for each specified SWC test. Whenever possible, a separate trigger channel should be established, enabling precise measurement of the undesired feedthrough signal magnitude.

If it is not possible to obtain a good feedthrough check with the voltage divider selected, the alternative voltage measuring scheme described in A.4 may be used.

A.2.2 Oscillatory SWC test generator open circuit voltage waveform test

The high voltage terminal of the measuring system voltage divider is connected to the high voltage output terminal of the test generator. The oscilloscope horizontal calibration is set to 2 μs/div, and the vertical calibration is set to 1kV/div, with "div" denoting oscilloscope screen division. This calibration shall include the voltage divider ratio. For example, if the divider ratio is 1000/1, then the scope vertical calibration would be

Copyright © 2002 IEEE. All rights reserved.

Copyright The Institute of Electrical and Electronics Engineers, Inc.
Provided by IHS under license with IEEE
No reproduction or networking permitted without license from IHS
Not for Resale

set to 1 V/div. The horizontal sweep trigger of the oscilloscope is adjusted to display one oscillatory burst waveform on the screen starting from the initial voltage rise from zero. The specified generator output voltage waveform is then recorded.

A second recording is made with the horizontal calibration set to 50 ns/div. This will display the initial rise time of the waveform.

A final recording of the generator voltage is made with the divider input paralleled by a noninductive resistor equal to the test generator source impedance. The waveform amplitude should drop to one half its original value. This checks the value of the generator source impedance. All other parameters of the test wave shall remain within the original generator specifications.

A.2.3 Fast transient SWC test generator open circuit voltage waveform test

These tests are performed similar to the oscillatory SWC tests except for the oscilloscope horizontal calibration setting, which should be set to 20 ns/div for the total waveform check and 5 ns/div for the initial rise time check.

A.3 SWC test generator performance verification

The full set of SWC test generator characteristics shall be verified as per manufacturer's recommendations or at least once every year, with the test results included with each SWC test report. The characteristics to be verified are specified in 5.4.2 and are repeated here for convenience:

Table A.1—SWC test generator characteristics to be verified

Fast transient	Oscillatory waveform
Rise time	Rise time of the first peak
Peak voltage level (no load)	Peak voltage level (no load)
Output impedance	Output impedance
Impulse duration	Waveform envelope decay
n/a	Oscillation frequency
Repetition rate during the burst	Repetition rate
Burst duration	n/a
Burst period	n/a
Test duration	Test duration

All measurements in this section shall be preceded by conducting an SWC waveform validity test (see A.2). The addition of any components that are used during testing shall be incorporated into the verification of the generator (i.e., coupling and isolating networks).

Copyright © 2002 IEEE. All rights reserved.

Copyright The Institute of Electrical and Electronics Engineers, Inc.
Provided by IHS under license with IEEE
No reproduction or networking permitted without license from IHS
Not for Resale

A.3.1 SWC waveform validity test

The performance verification measurements shall start by conducting the SWC waveform validity tests described in A.2. In addition to the required waveform plots, individual numbers for the following parameters shall be measured and documented:

a) Waveform rise time (fast transient test)
b) Rise time of the first peak (oscillatory test)
c) Peak voltage level with no load ($R_L \geq 1000\ \Omega$)
d) Impulse duration (fast transient)
e) Waveform envelope decay (oscillatory test)

A copy of all recorded waveforms shall be included in the report.

A.3.2 Test generator output impedance measurement

The generator output impedance shall be obtained by measuring the output voltage that the generator produces with two different load impedances. The voltage measurements shall be conducted in accordance with A.2.2 (for the oscillatory SWC test) and A.2.3 (for the fast transient SWC test).

Load impedance shall be resistive across the measurement bandwidth (A.1) and shall include impedance contribution of the voltage divider used in the measurements. It shall be known to within ± 5% actual value.

The exact impedance value selection is arbitrary as long as the precision of the final generator impedance estimate remains within ± 10%, and one of the values selected is close to the expected generator output impedance Z_O. A good selection for $Z_O = 200\ \Omega$ would be $Z_{L1} = 1000\ \Omega$, $Z_{L2} = 200\ \Omega$, and for $Z_O = 50\ \Omega$ would be $Z_{L1} = 200\ \Omega$, $Z_{L2} = 50\ \Omega$.

The generator impedance shall be calculated according to

$$Z_O = \frac{Z_{L1} \times Z_{L2} \times (Z_{L2} - V_{L1})}{V_{L1} \times V_{L2} - V_{L2} \times Z_{L1}}$$

where

Z_O is generator output impedance,
Z_{L1} is load impedance applied in the first test,
Z_{L2} is load impedance applied in the second test,
V_{L1} is peak voltage measured with impedance Z_{L1},
V_{L2} is peak voltage measured with impedance Z_{L2}.

A.3.3 Oscillatory SWC test generator repetition rate measurement

The generator repetition rate measurement shall be conducted in accordance with A.2.2 with the oscilloscope horizontal calibration set to 1 ms/div. The period between the oscillatory bursts shall be documented and compared with the value specified in 4.1.

Copyright © 2002 IEEE. All rights reserved.

Copyright The Institute of Electrical and Electronics Engineers, Inc.
Provided by IHS under license with IEEE
No reproduction or networking permitted without license from IHS Not for Resale

A.3.4 Fast transient SWC test generator repetition parameter measurement

Three fast transient repetition parameters shall be measured: the fast transient repetition rate during bursts, individual burst duration, and burst period. The measurements shall be performed in accordance with A.2.3, with the horizontal calibration set to 0.1 ms/div for measuring the repetition rate during bursts, and 50 ms/div for measuring the individual burst duration and the burst period. The parameters shall be documented and compared with the values specified in 4.2.

A.4 Alternative voltage measuring scheme

This scheme replaces the voltage divider by a 1000 Ω resistor and a wide frequency bandwidth current transformer, The resistor shall be noninductive and be able to dissipate 4 W. It is connected across the output of the SWC test generator. The current transformer is used to measure the current through the resistor connections which are passed through its primary window. Several wide-band current transformers are available commercially, with one typical device having a ratio of 1V/1A and a frequency response flat from 900 Hz to 900 MHz when used with a special signal cable and a termination resistor, which are included. When used to measure the current in the 1000 Ω resistor, it is equivalent to using a 1000/1 voltage divider. The oscilloscope vertical calibration should be set to 1.0 V/div.

This method will load the test generator somewhat and the voltage measured will appear less than its true value. The true voltage can be estimated by multiplying the measured voltage by a correction factor, K_C:

$$K_C = 1 + \frac{Z_o}{1000}$$

where

Z_O is output impedance of the SWC test generator measured in A.3.2

Because this measuring scheme inductively couples the current in the resistor, it eliminates the direct connection between the oscilloscope signal ground and the test generator. Therefore, stray transient ground currents, which can produce large errors, are significantly reduced.

If the transient signal feedthrough problem persists, it may be necessary to replace the oscilloscope with an alternate unit meeting minimum shielding/noise immunity requirements.

All measurements in this clause shall be preceded by a measuring system feedthrough test, specified in A.2.1.

Copyright © 2002 IEEE. All rights reserved.

Copyright The Institute of Electrical and Electronics Engineers, Inc.
Provided by IHS under license with IEEE
No reproduction or networking permitted without license from IHS
Not for Resale

Annex B

(informative)

Test waveform delivery

B.1 Waveform delivery principles

Delivering a high quality test waveform to the system under test may represent a challenge if all factors involved in signal transmission are not taken into account. This annex gives a brief description of the techniques needed to ensure test repeatability. The waveform delivery components considered are

— Cable connecting the generator to the coupling network
— Coupling network
— Balanced/unbalanced transformer
— Impedance matching network

It is important to recognize that the SWC test load impedance can not be implicitly controlled and will be determined by the circuit under test. To avoid complicated evaluation of different installation conditions, the following are required:

— The cable connecting the generator to the coupling network should be a transmission line with its characteristic impedance matched to the SWC generator output impedance.
— The coupling network by itself should not introduce additional waveform distortion or rise time degradation.
— All tests requiring transverse mode signal delivery (line-to-line tests) should use a wideband balanced/unbalanced transformer network. The transformer should be placed immediately in front of the coupling network and should be implemented in the form of a transmission line. An example describing such a network is given in C.1.
— In a case where the generator output impedance may be different from the standard output impedance required by the SWC test, a suitable wideband impedance transformation network should be used to provide the matching. An example describing such a network is given in C.2.

The introduction of the impedance transformation network makes it possible to build an SWC generator with a single output impedance set to 50 Ω/unbalanced, for both the fast transient and the 1 MHz oscillatory SWC tests. The signal should be delivered by using a coaxial output connector, followed by 1 m of the 50 Ω coaxial cable. The cable end can be connected to a capacitive clamp, an appropriate coupling/isolation network (in case of the fast transient test), or a 50/200 Ω impedance transformer followed by an appropriate coupling/isolation network (for a common mode 1 MHz oscillatory SWC test). It should be noted that due to the voltage transformation (1:2), generator output voltage required for the oscillatory SWC test will be one half in the case of a 50 Ω system followed by a 50/200 Ω transformer, than the one found in a 200 Ω system.

The transverse mode tests should be conducted by adding a balanced/unbalanced transformer network.

Copyright © 2002 IEEE. All rights reserved.

Copyright The Institute of Electrical and Electronics Engineers, Inc.
Provided by IHS under license with IEEE
No reproduction or networking permitted without license from IHS Not for Resale

B.2 Verification of the waveform delivery system characteristics

The performance of the components used for waveform delivery should be verified by using the test procedures described in Annex A with the main difference being that the tests should be performed at the following output points:

- For common mode oscillatory and fast transient SWC tests, the measurements should be performed between the surge ground and the surge output terminal of the coupling/isolating network assembly. Any impedance transformation network required to meet the output impedance specifications given in Clause 3 should be included in the measurements.
- For a transverse mode oscillatory SWC test, the measurements should be performed between the coupling/isolating network surge output terminals, and between each of the terminals and the SWC generator ground (balance test). Any impedance transformation network required to meet the output impedance specifications given in Clause 4 should be included in the measurements.
- For a common mode fast transient SWC test with the capacitive clamp coupling network, the measurements should be performed between the output terminals of the coaxial connector normally feeding the capacitive clamp, with the clamp assembly disconnected.

The measurement should be performed above a reference ground plane, specified in 7.3.3, with the generator connected to a coupling/isolating network by means of a 1 m long transmission line, the impedance characteristic of which should be equal to the output impedance of the SWC generator. The balanced/unbalanced and impedance transformation networks should be inserted in the circuit as required by the SWC generator manufacturer. There should be no other loads connected to the output.

With the connections described above, the wave shape measured on the output of the waveform delivery system should comply with all specifications given in 4.1 and 4.2.

In addition to the above, it is necessary to verify the common mode rejection properties of the balancing network used for transverse mode testing. The test is performed by connecting the voltage divider across the balanced coupling/isolation network outputs. The output connected to the grounded side of the divider should further be connected directly to the surge generator ground terminal. After measuring the open circuit voltage waveform in accordance with A.2.2, the coupling/isolation network terminals should be swapped, and the measurements repeated.

The resulting output voltage waveforms should remain within the original standard specifications, with less than ± 10% difference between any two points on the waveforms recorded during the two measurements.

Copyright © 2002 IEEE. All rights reserved.

Copyright The Institute of Electrical and Electronics Engineers, Inc.
Provided by IHS under license with IEEE
No reproduction or networking permitted without license from IHS
Not for Resale

Annex C

(informative)

Balanced/unbalanced transformer impedance matching network examples

C.1 Introduction

As indicated in Clause 5, the test generator must be capable of generating both common mode and transverse mode output voltages. Due to their internal construction, some test generators may be inherently limited to producing only common mode transients (one output terminal referenced to ground). This problem can conveniently be corrected by adding an external balanced/unbalanced transformer network followed by an appropriate coupling/isolation network connected in series at each of the output terminals. Description of this network is given in C.2 below. The method for verifying the correct operation of the balanced/unbalanced transformer network is described in B.2, with the typical coupling/isolation network connections shown in Figure 6.

C.3 describes the construction of a 4:1 impedance matching transformer capable of transforming generator output impedance from 50–200 Ω. In most instances, the use of this network should not be necessary due to the fact that most commercially available generators already support correct output impedance settings.

C.2 Balanced/unbalanced transmission line transformer

A simple transmission line transformer providing the balanced to unbalanced mode transformation is shown in Figure C.1. The transformer was realized with 10 turns of the RG 58 A/U 50 Ω coaxial cable with solid dielectric wound on a Type 43 ferrite core toroid (μ_r @ 800 @ 25 °C). The core dimensions were: inner diameter = 35 mm, outer diameter = 61 mm, core thickness = 12.7 mm.

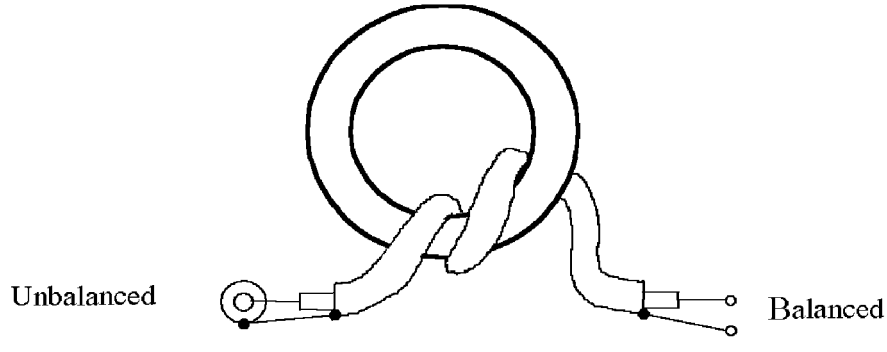

Figure C.1—Balanced/unbalanced transmission line transformer example

C.3 Transmission line based impedance matching transformer

A simple 4:1 transmission line based impedance matching transformer is shown in Figure C.2. The transformer was realized with 10 turns of the RG 58 A/U 50 Ω coaxial cable with solid dielectric wound on a Type 43 ferrite core toroid (μ_r @ 800 @ 25 °C). The core dimensions were: inner diameter = 35 mm, outer diameter = 61 mm, core thickness = 12.7 mm.

Copyright © 2002 IEEE. All rights reserved.

Copyright The Institute of Electrical and Electronics Engineers, Inc.
Provided by IHS under license with IEEE
No reproduction or networking permitted without license from IHS
Not for Resale

Ideally, the impedance of the transmission line used in a 4:1 transformer design should be equal to the geometric mean of the desired input and output impedance (for a 50 Ω input) as follows:

$$\sqrt[2]{50 \times 200} = 100\ \Omega$$

In actual practice, however, the impedance may vary from its ideal value without significantly affecting the device bandwidth and transformation ratio. If more convenient, the transmission line can be constructed by substituting the coaxial cable with a simple twisted wire pair.

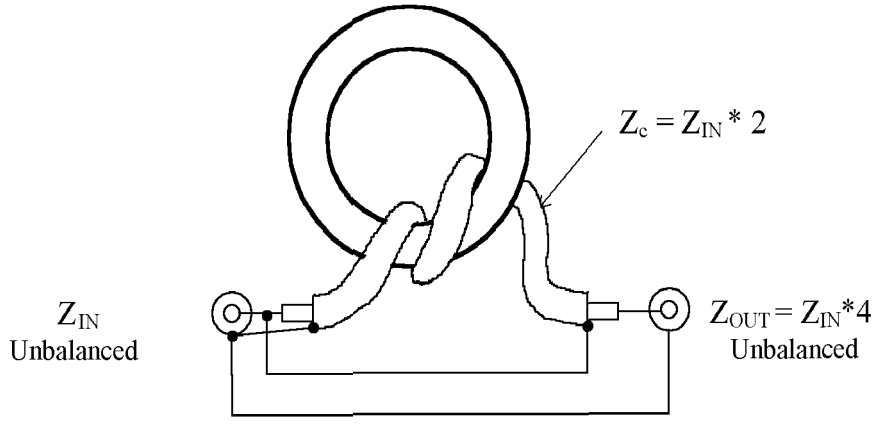

Figure C.2—Transmission line based impedance matching transformer example

Copyright © 2002 IEEE. All rights reserved.

Copyright The Institute of Electrical and Electronics Engineers, Inc.
Provided by IHS under license with IEEE
No reproduction or networking permitted without license from IHS
Not for Resale

Annex D

(informative)

Communication interface equipment and communication system equipment

The logical services performed by the protective relay communication equipment can be provided by way of several mechanisms. The relay system may interface with communication interface equipment that can either provide services directly or in conjunction with a communication system. In some cases, the protective relay may have some form of communication facilities built in. All equipment providing transfer trip, directional comparison, permissive communications services, transport or similar protective functions, should comply with this standard. The communication interface equipment covered by this standard can connect to the relay logic by any means including direct wiring or data networking as long as protective functions are involved.

In many cases, such as with audio tone (direct on a telephone circuit) and power line carrier, the communication interface equipment and the communication system is the same device. However, when audio tone is connected to, for example, a T1 channel bank or microwave multiplexer, the audio tone is considered the communication interface equipment and the T1 equipment or microwave is considered to be the communication system. It is possible to have more than one device perform the function of the communication system, such as when a T1 channel bank is connected to an add/drop multiplexer and then a Sonet multiplexer.

In all cases, equipment under test should meet the acceptance criteria established in Clause 9. In some cases, other standards may refer to IEEE Std C37.90.1-2002™ using their own acceptance criteria. It is outside the scope of this standard to address these situations. Please consult the appropriate standards that govern these situations.

Examples of protective communication configurations

The following represent some example configurations and the tests required to comply with this standard. Since equipment varies among manufacturers and application, these examples may not be entirely applicable but will act as a starting point in determining the required test points for similar designs.

Points that should be tested and are common to all examples include

a) Keying and output connection between the relay system and the communication interface equipment.
b) Alarm and auxiliary I/O connections.
c) Permanently connected substation computers.
d) The power supply inputs to each device.
e) In the situations involving multiplexers that are transporting nonprotection logic signals, the nonprotection inputs are to be tested with observations made on the protection logic signals.
f) Connections between communication interface and communications system equipment should be tested unless these connections must, as stated by the manufacturer(s), be less than 2 m in length.

Copyright © 2002 IEEE. All rights reserved.

Copyright The Institute of Electrical and Electronics Engineers, Inc.
Provided by IHS under license with IEEE
No reproduction or networking permitted without license from IHS Not for Resale

Items that can be excluded from testing include

a) Temporary connected maintenance computers.
b) Connections that, as stated by the manufacturer, must be less than 2 m in length.
c) Non-metallic connections, such as fiber.

Example configurations:

Example 1: Audio tone connected to a leased telephone circuit (see Figure D.1)

The 4-wire audio connection should be tested.

NOTE—The equipment manufactured to IEEE 487™ is covered under its own guidelines, however the current IEEE-487™ equipment only details passive equipment. If active equipment is used, it should comply with this standard since it is being used to transport the protection signal.

Example 2: Power line carrier connected to a hybrid (see Figure D.2)

Testing of power line carrier RF ports is not required by this standard and is addressed by ANSI C93.5-1997.

Example 3: Transfer trip module in a T1/Sonet shelf (see Figure D.3)

NOTE—In application using a T1 shelf, the T1 connection itself is excluded as long as its length is kept less than 2 m.

Example 4: Audio tone connected to a microwave multiplex card or a PCM channel bank card in a T1/ Sonet shelf (see Figure D.4)

The 4-wire audio connection should be tested.

Example 5: A current differential relay connected to a channel bank card via a fiber cable (see Figure D.5)

NOTE—In applications using a T1 shelf, the T1 connection itself is excluded as long as its length is kept less than 2 m.

Example 6: A protective relay connected to a modem, where the modem transports the protective logic signal (see Figure D.6)

The 4-wire audio connection should be tested.

NOTE—The equipment manufactured to IEEE 487™ is covered under its own guidelines, however the current IEEE-487™ equipment only details passive equipment. If active equipment is used, it should comply with this standard since it is being used to transport the protection signal.

Example 7: A protective relay with an ethernet interface, where the ethernet is used to transport the protective logic signal (see Figure D.7)

Any metallic connection to the hub should be tested. This includes power supply inputs, alarms, and ports utilizing balanced twisted pair inputs.

Example 8: A phase comparison relay connected to frequency shift keying (FSK) interface equipment and an analog microwave system (see Figure D.8)

Metallic connection between the phase comparison relay and the baseband equipment should be tested if that connection is allowed to exceed distances of over 2 m.

Copyright © 2002 IEEE. All rights reserved.

Copyright The Institute of Electrical and Electronics Engineers, Inc.
Provided by IHS under license with IEEE
No reproduction or networking permitted without license from IHS
Not for Resale

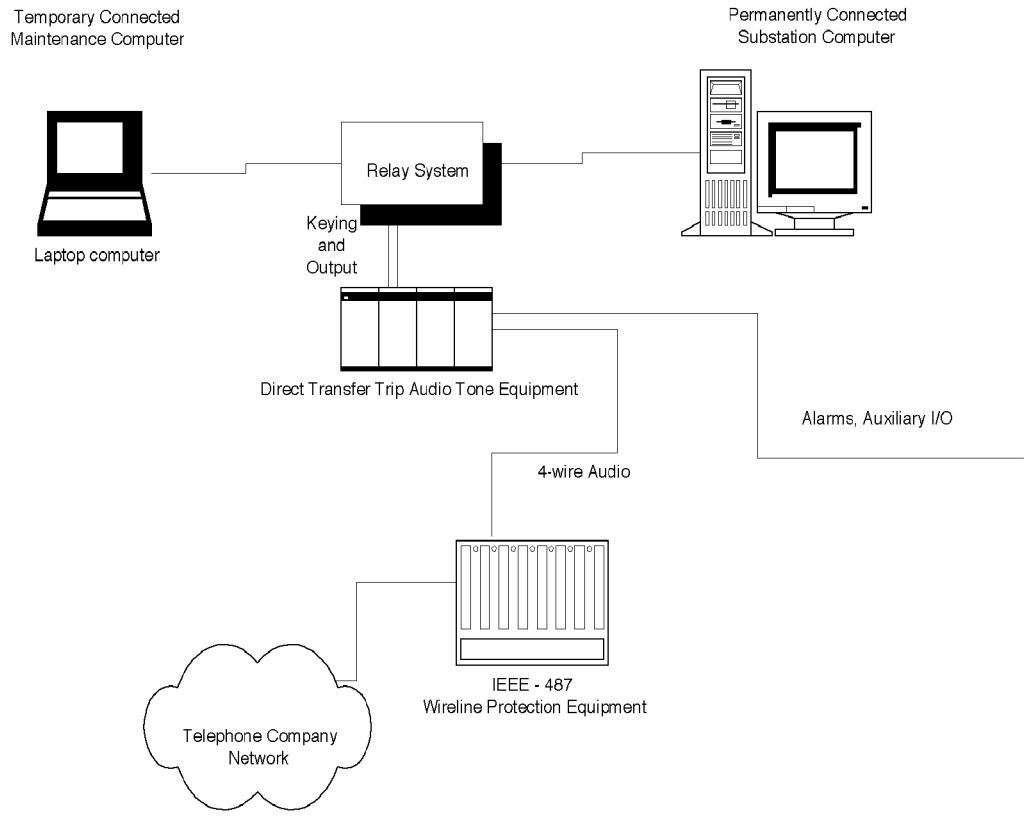

Figure D.1—Audio tone and leased telco circuit

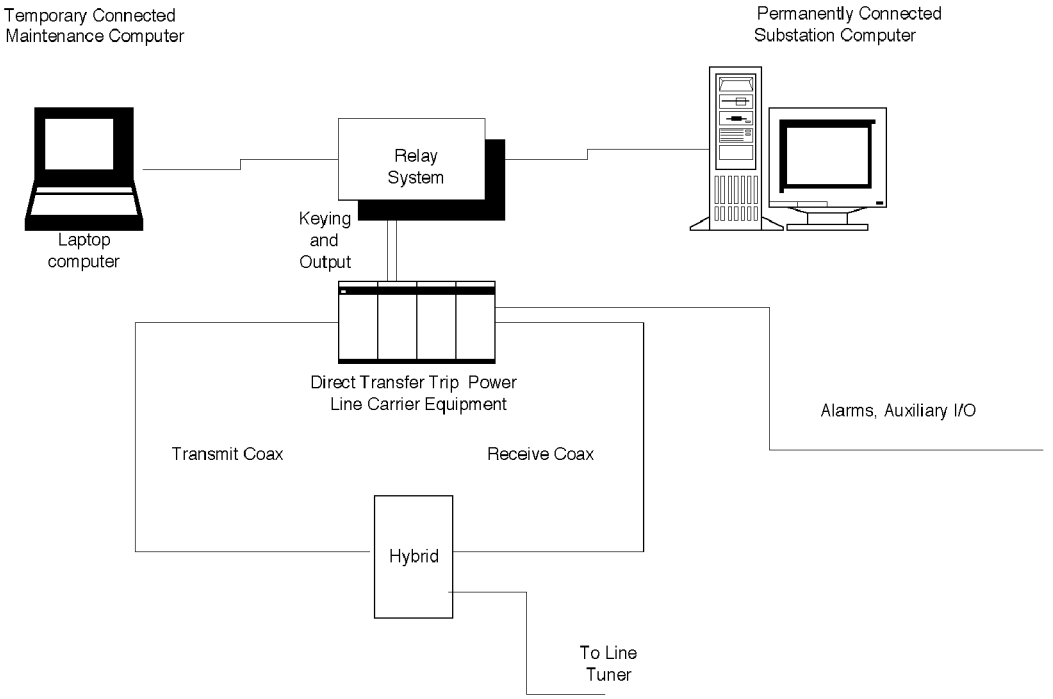

Figure D.2—Power line carrier and hybrid

Copyright © 2002 IEEE. All rights reserved.

Copyright The Institute of Electrical and Electronics Engineers, Inc.
Provided by IHS under license with IEEE
No reproduction or networking permitted without license from IHS
Not for Resale

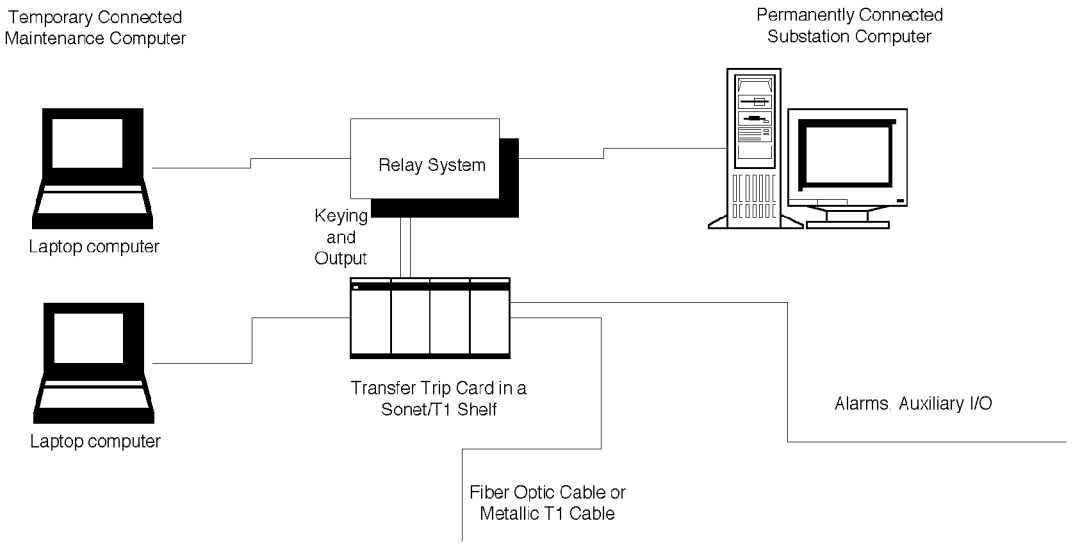

Figure D.3—Transfer trip card in a Sonet/T1 shelf

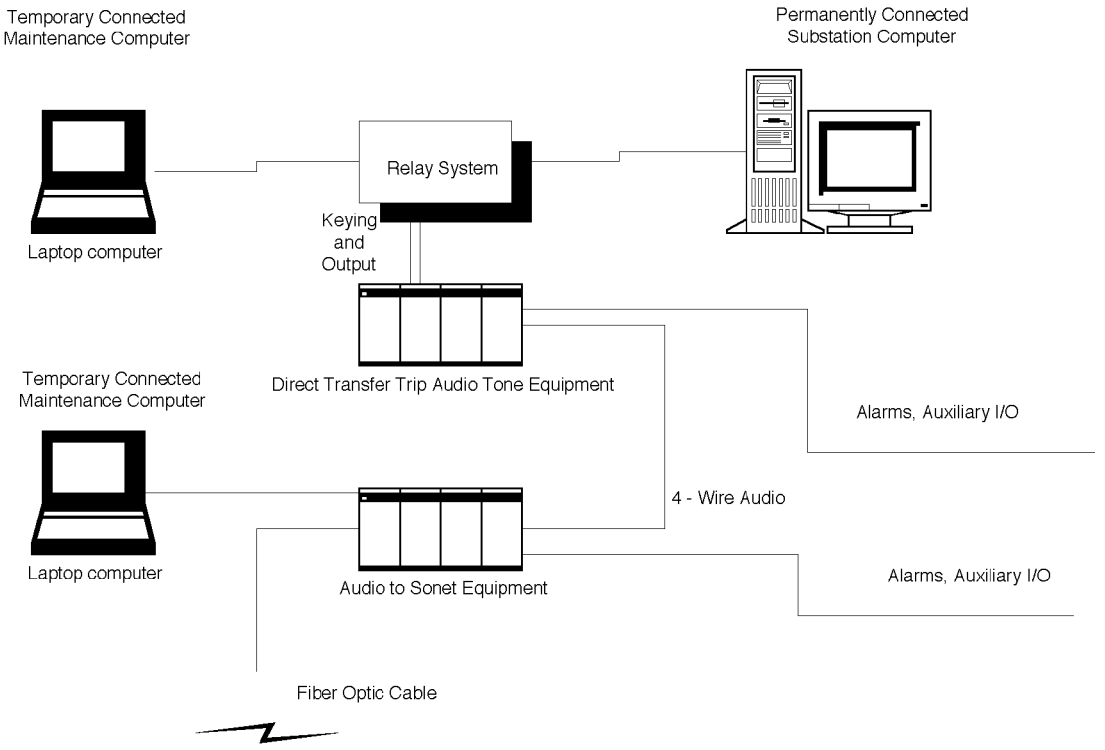

Figure D.4—Audio tone connected to a multiplex card

Copyright © 2002 IEEE. All rights reserved.

Copyright The Institute of Electrical and Electronics Engineers, Inc.
Provided by IHS under license with IEEE
No reproduction or networking permitted without license from IHS
Not for Resale

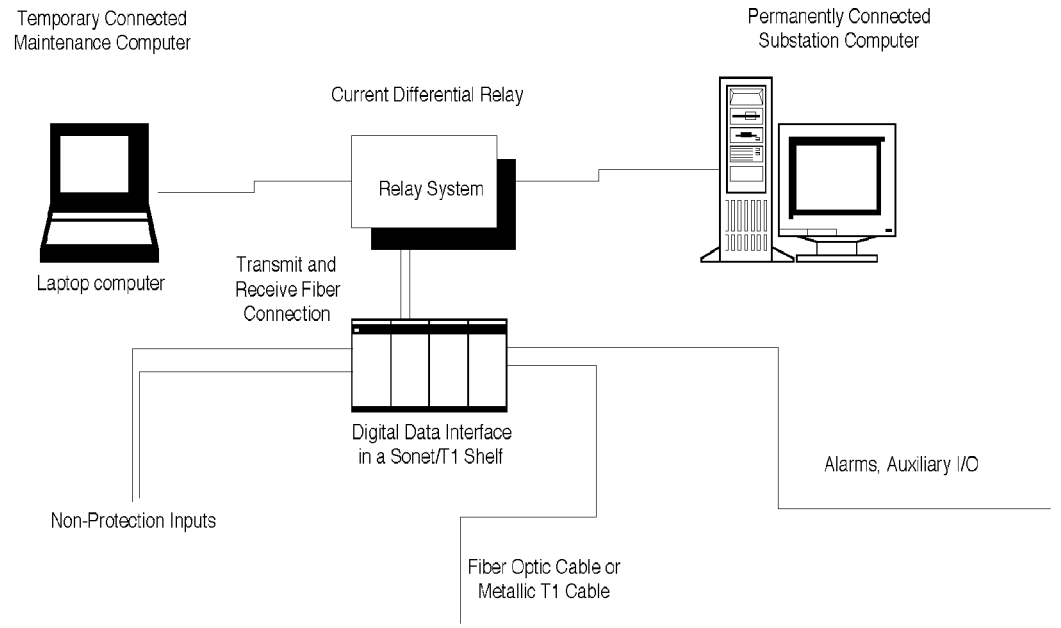

Figure D.5—Current differential and fiber optic channel bank card

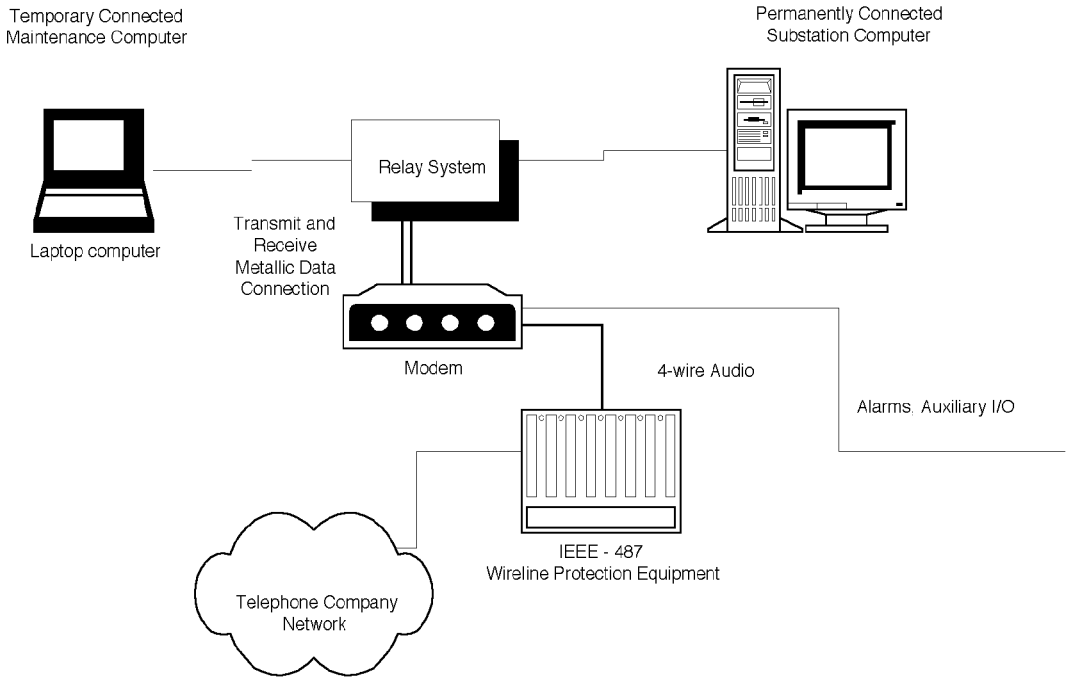

Figure D.6—Protective relay using a modem for teleprotection

Copyright © 2002 IEEE. All rights reserved.

Copyright The Institute of Electrical and Electronics Engineers, Inc.
Provided by IHS under license with IEEE
No reproduction or networking permitted without license from IHS
Not for Resale

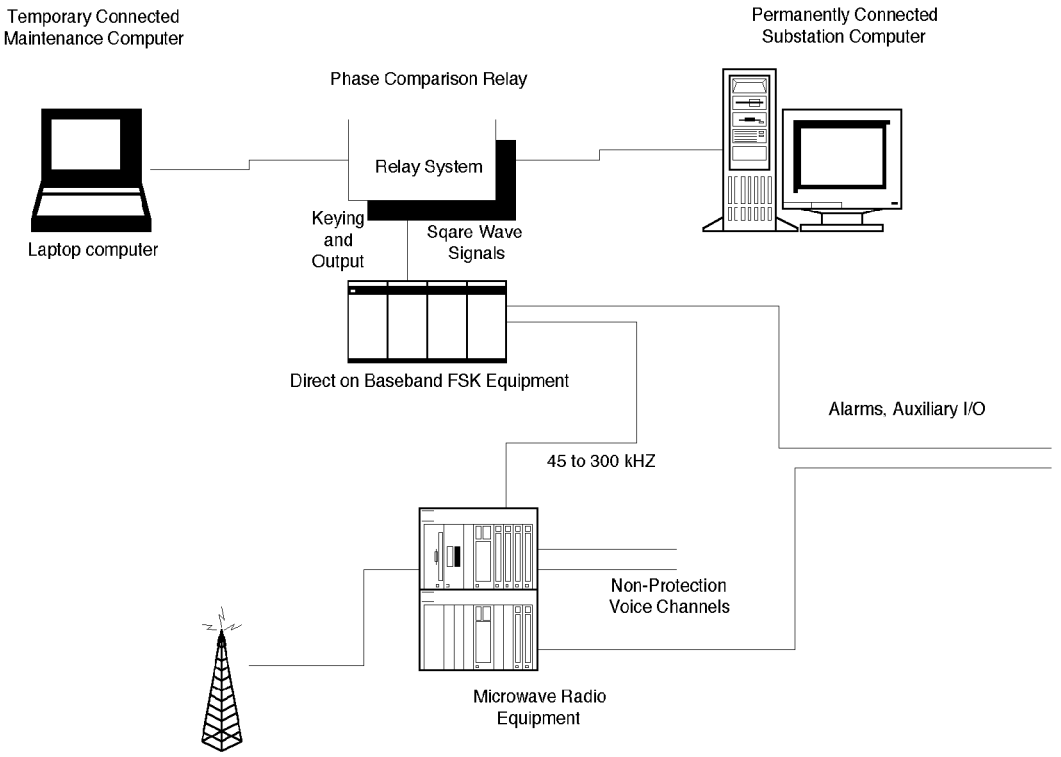

Figure D.7—Phase comparison equipment using analog microwave via an FSK interface

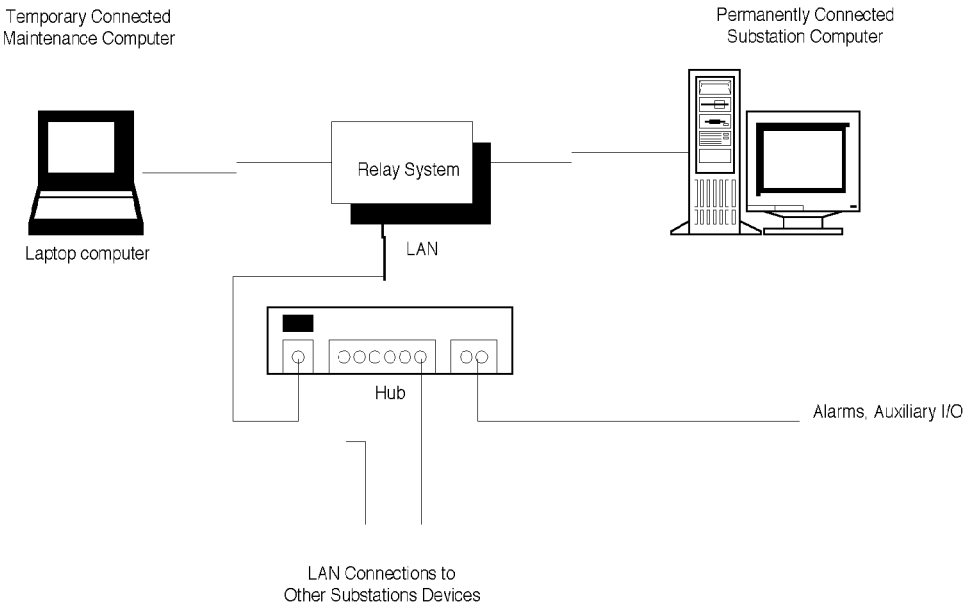

Figure D.8—Protective relay using ethernet for protection logic and tripping output signaling

Copyright © 2002 IEEE. All rights reserved.

Copyright The Institute of Electrical and Electronics Engineers, Inc.
Provided by IHS under license with IEEE
No reproduction or networking permitted without license from IHS
Not for Resale

Annex E

(informative)

Comparison with IEC 60255-22-1 (1988-05) and IEC 60255-22-4 (1992-03)

Below are details in which IEEE Std C37.90.1-2002™ differs from the corresponding IEC standards for the oscillatory— 60255-22-1 (1988-05) [B2]—and fast transient—60255-22-4 (1992-03) [B3] tests with a brief explanation of the underlying reason for the deviation.

E.1 Severity classes

E.1.1 IEC 60255-22-1 (1988-05)

IEC 60255-22-1 (1988-05) [B2] defines three severity classes that apply to different field conditions. Class 3 applies to installations with long unshielded CT, VT, or output leads, or where power supply circuits are connected to station batteries not used exclusively to power static equipment. These conditions are common in US utilities and industries. Therefore, IEEE Std C37.90.1-2002™ defines a single class equivalent to IEC 60255-22-1 (1988-05) [B2] class 3.

E.1.2 IEC 60255-22-4 (1992-03)

IEC 60255-22-4 (1992-03) [B3] defines five classes of tests ranging from class 0, which applies to conditions where no testing is required, to class 4, which applies to environments in which multiconductor cables are used for both connections to the protective equipment and other circuits which may be the source of fast transients. Class 4 also applies where the relay or relay system is grounded to a facility grounding system, which can be the source of fast transients such as those caused by switching. These conditions are common in US utilities and industries. Therefore, IEEE Std C37.90.1-2002™ defines a single class equivalent to IEC 60255-22-4 (1992-03) [B3] class 4.

E.2 Application of test

E.2.1 IEC 60255-22-1 (1988-05)

IEC 60255-22-1 (1988-05) [B2] requires that the test be applied both common mode and transverse mode to all inputs and outputs while IEEE Std C37.90.1-2002™ does not require transverse mode tests on CT, data communications, or signal circuits. Transverse testing is not required on these circuits because they are not subject to significant transverse mode surges.

IEEE Std C37.90.1-2002™ requires transverse tests to be conducted using the same surge magnitude as common mode tests, while IEC 60255-22-1 (1988-05) [B2] specifies a transverse magnitude of one half the common mode magnitude for class 2 and less than one half for class 3, but allows that the same value can be specified for the common mode and transverse mode tests under special circumstances. IEEE Std C37.90.1-2002™ requires the same magnitude surge be applied for both tests because switching of inductive loads such as electromechanical relays may produce transients approaching this magnitude.

Copyright © 2002 IEEE. All rights reserved.

Copyright The Institute of Electrical and Electronics Engineers, Inc.
Provided by IHS under license with IEEE
No reproduction or networking permitted without license from IHS
Not for Resale

E.2.2 IEC 60255-22-4 (1992-03)

IEC 60255-22-4 (1992-03) [B3] requires all input and output circuits to be subjected to a common mode test only. IEEE Std C37.90.1-2002™ requires a transverse mode test for power supply, voltage input, and output circuits. The transverse tests are required because power supply and output circuits may be exposed to transverse transients.

E.3 Current input circuits

IEEE Std C37.90.1-2002™ requires current flow in current inputs to be 75% of the nominal input current rating. IEC 60255-22-1 (1988-05) [B2] and IEC 60255-22-4 (1992-03) [B3] requires input energizing quantities to be equal to the operating value adjusted both above and below by an amount equal to the claimed variation due to the disturbance voltage, or rated values where appropriate. This state may have many different possible values in the case of a multi-function relay. The 75% of rating requirement is common to other IEEE® electrical environment standards.

E.4 Maximum test lead length

IEC 60255-22-1 (1988-05) [B2] limits test lead length to 2 m while IEC 60255-22-4 (1992-03) [B3] sets the limit at 1 m. IEEE Std C37.90.1-2002™ requires that test leads be no longer than 1 m, except when using a capacitive coupling clamp, the maximum length is 2 m. A single maximum lead length for both tests is specified to minimize differences between the oscillatory and fast transient tests.

E.5 Coupling network

IEC 60255-22-1 (1988-05) [B2] recommends 1.5 mH blocking inductors and 0.5 μF coupling capacitors to couple the generator to the equipment under test while IEC 60255-22-4 (1992-03) [B3] , by reference to IEC 61000-4-4 (1995-01), specifies 33 nF or greater coupling capacitors and blocking inductors greater than 100 μH. IEEE Std C37.90.1-2002™ specifies 1.5 mH blocking inductors and 33 nF coupling capacitors to permit a single coupling network to be applied for both the oscillatory and fast transient tests.

E.6 Acceptance criteria

The IEC standards have three criteria defined for acceptance. The first two require that the relay not misoperate with the characteristic quantity below or above the operating value, respectively. The third criteria establishes a limit for the off-state current of solid state outputs at 110% of the pretest value. IEEE Std C37.90.1-2002™ expands these to a list of 12 criteria. The longer list of conditions is necessary to better define the criteria for passing the tests, particularly for communications. However, rather than set a post-test/pretest ratio for off-state current of solid state outputs, IEEE Std C37.90.1-2002™ requires that stated tolerances be maintained before, after, and during the tests.

Copyright © 2002 IEEE. All rights reserved.

Copyright The Institute of Electrical and Electronics Engineers, Inc.
Provided by IHS under license with IEEE
No reproduction or networking permitted without license from IHS
Not for Resale

Annex F

(informative)

Bibliography

[B1] Gottlieb, I.M., *Practical RF Power Design Techniques,* McGraw-Hill Inc., PA, 1993.

[B2] IEC 60255-22-1 (1988-05), Electrical relays—Part 22: Electrical Disturbance Tests For Measuring Relays And Protection Equipment—Part 1: 1 Mhz Burst Disturbance Tests.

[B3] IEC 60255-22-4 (1992-03), Electrical relays—Part 22: Electrical Disturbance Tests For Measuring Relays And Protection Equipment—Section 4: Fast Transient Disturbance Test.

[B4] IEEE 100™ , *The Authoritative Dictionary of IEEE Standards Terms,* Seventh Edition.

[B5] IEEE C37.90-1989™ (Reaff 1994), IEEE Standard Relay and Relay Systems Associated with Electric Power Apparatus.

[B6] IEEE C37.90.1-1989™ (Reaff 1994), IEEE Standard Surge Withstand Capability (SWC) Tests For Protective Relays and Relay Systems.

[B7] Rotholz, E. "Transmission-Line Transformers," *IEEE Transactions on Microwave Theory and Techniques,* April 1981.

Copyright © 2002 IEEE. All rights reserved.

Copyright The Institute of Electrical and Electronics Engineers, Inc.
Provided by IHS under license with IEEE
No reproduction or networking permitted without license from IHS Not for Resale