IEEE Standard Requirements for Pad-Mounted Fused Switchgear

Sponsor

Switchgear Committee
of the
IEEE Power Engineering Society

Approved 13 July 1998

IEEE-SA Standards Board

Abstract: Requirements for assemblies of single-phase and three-phase, dead-front and live-front, pad-mounted, load-interrupter switches with expulsion, current-limiting, and other types of fuses in enclosures up to 38 kV rated maximum voltage are given. Definitions are given, and service conditions and ratings are discussed. Design tests, production tests, and construction requirements are included.
Keywords: fused-loadbreak way, fused-switched way, fused way, pad-mounted fused switchgear, switched way

---

The Institute of Electrical and Electronics Engineers, Inc.
345 East 47th Street, New York, NY 10017-2394, USA

Copyright © 1998 by the Institute of Electrical and Electronics Engineers, Inc.
All rights reserved. Published 1998. Printed in the United States of America.

ISBN 0-7381-0348-9

No part of this publication may be reproduced in any form, in an electronic retrieval system or otherwise, without the prior written permission of the publisher.

--`,,`-`-`,,`,,`,`,,`---

Copyright The Institute of Electrical and Electronics Engineers, Inc.
Provided by IHS under license with IEEE
No reproduction or networking permitted without license from IHS

Not for Resale

IEEE Standards documents are developed within the IEEE Societies and the Standards Coordinating Committees of the IEEE Standards Association (IEEE-SA) Standards Board. Members of the committees serve voluntarily and without compensation. They are not necessarily members of the Institute. The standards developed within IEEE represent a consensus of the broad expertise on the subject within the Institute as well as those activities outside of IEEE that have expressed an interest in participating in the development of the standard.

Use of an IEEE Standard is wholly voluntary. The existence of an IEEE Standard does not imply that there are no other ways to produce, test, measure, purchase, market, or provide other goods and services related to the scope of the IEEE Standard. Furthermore, the viewpoint expressed at the time a standard is approved and issued is subject to change brought about through developments in the state of the art and comments received from users of the standard. Every IEEE Standard is subjected to review at least every five years for revision or reaffirmation. When a document is more than five years old and has not been reaffirmed, it is reasonable to conclude that its contents, although still of some value, do not wholly reflect the present state of the art. Users are cautioned to check to determine that they have the latest edition of any IEEE Standard.

Comments for revision of IEEE Standards are welcome from any interested party, regardless of membership affiliation with IEEE. Suggestions for changes in documents should be in the form of a proposed change of text, together with appropriate supporting comments.

Interpretations: Occasionally questions may arise regarding the meaning of portions of standards as they relate to specific applications. When the need for interpretations is brought to the attention of IEEE, the Institute will initiate action to prepare appropriate responses. Since IEEE Standards represent a consensus of all concerned interests, it is important to ensure that any interpretation has also received the concurrence of a balance of interests. For this reason, IEEE and the members of its societies and Standards Coordinating Committees are not able to provide an instant response to interpretation requests except in those cases where the matter has previously received formal consideration.

Comments on standards and requests for interpretations should be addressed to:

Secretary, IEEE-SA Standards Board
445 Hoes Lane
P.O. Box 1331
Piscataway, NJ 08855-1331
USA

Note: Attention is called to the possibility that implementation of this standard may require use of subject matter covered by patent rights. By publication of this standard, no position is taken with respect to the existence or validity of any patent rights in connection therewith. The IEEE shall not be responsible for identifying patents for which a license may be required by an IEEE standard or for conducting inquiries into the legal validity or scope of those patents that are brought to its attention.

Authorization to photocopy portions of any individual standard for internal or personal use is granted by the Institute of Electrical and Electronics Engineers, Inc., provided that the appropriate fee is paid to Copyright Clearance Center. To arrange for payment of licensing fee, please contact Copyright Clearance Center, Customer Service, 222 Rosewood Drive, Danvers, MA 01923 USA; (978) 750-8400. Permission to photocopy portions of any individual standard for educational classroom use can also be obtained through the Copyright Clearance Center.

Copyright The Institute of Electrical and Electronics Engineers, Inc.
Provided by IHS under license with IEEE
No reproduction or networking permitted without license from IHS
Not for Resale

Introduction

(This introduction is not part of IEEE Std C37.73-1998, IEEE Standard Requirements for Pad-Mounted Fused Switchgear.)

This standard is part of a series for submersible and pad-mounted switchgear covered in IEEE Std C37.71-1984 and ANSI C37.72-1987, and it draws heavily from these. Substantial changes and improvements have been made, and it is expected that these improvements will be incorporated in IEEE Std C37.71 and ANSI C37.72 at their next revision, or the scope of this standard will be broadened to cover these other standards.

This standard covers pad-mounted switchgear, using air or other insulating media, and includes switches, fuses, and loadbreak devices. Live-front and dead-front equipment with all types of connectors are covered.

This standard assigns an overall rating to the switchgear for the common ratings of dielectric withstand, momentary current, and short-time current ratings. The ratings for the switchgear are based on the minimum ratings of the components or ways. In addition, each way is assigned specific ratings reflecting its continuous current, and its specific load or fault interrupting current, depending upon the components used in that way.

This standard also recognizes designs for equipment specifically intended for grounded-wye system applications, utilizing phase-to-ground rated devices for those applications.

There are substantial improvements and detailed test requirements for switching tests for interrupter switches, and for loadbreak devices that are operated by opening and closing the fuse assemblies. This standard also includes testing to verify proper operation of the fuse within the enclosed equipment.

The Standards Committee on Power Switchgear, C37, which reviewed and approved this standard, had the following personnel at the time of approval:

E. Byron, *Chair* **M. Calwise,** *Secretary*

A. K. McCabe, *Executive Vice-Chair of High-Voltage Switchgear Standards*

J. C. Scott, *Executive Vice-Chair of Low-Voltage Switchgear Standards*

D. L. Swindler, *Executive Vice-Chair of IEC Activities*

Organization Represented	*Name of Representative*
Electric Light and Power Group	G. Miller
	D. E. Galicia
	J. L. Koepfinger
	D. G. Komassa
	J. H. Provanzana
	T. E. Bruck *(Alt.)*
Institute of Electrical and Electronics Engineers	D. F. Peelo
	L. R. Beard
	P. W. Dwyer
	A. C. Monroe
	D. Sigmon
	S. C. Atkinson *(Alt.)*
	D. G. Kumbera *(Alt.)*
	L. V. McCall *(Alt.)*

Copyright © 1998 IEEE. All rights reserved.

Copyright The Institute of Electrical and Electronics Engineers, Inc.
Provided by IHS under license with IEEE
No reproduction or networking permitted without license from IHS
Not for Resale

Organization Represented	*Name of Representative*
National Electrical Manufacturers Association	R. D. Garzon
	W. Kracht
	H. L. Miller
	T. Olsen
	D. Stone
	E. Byron *(Alt.)*
	G. T. Jones *(Alt.)*
	G. Sakats *(Alt.)*
	D. L. Swindler *(Alt.)*
Tennessee Valley Authority	D. N. Reynolds
Testing Laboratory Group	L. Frier
	P. Notarian
U.S. Department of the Army, Office of the Chief of Engineers	J. A. Gilson
U.S. Department of the Navy, Naval Construction Battalion Center	R. R. Nicholas
Western Area Power Administration	G. D. Birney

The Working Group on C37.73 of the Recloser and Sectionalizer Subcommittee of the IEEE Switchgear Committee, which prepared this standard, had the following members at the time of approval:

R. L. Capra, *Chair*

D. J. Akers	D. G. Komassa	W. Rueth
R. H. Arndt	J. Marek	V. Scuderi
H. L. Bowles	D. R. Martin	J. G. St. Clair
R. Castrejana	A. C. Monroe	T. J. Tobin
L. Chabala	F. J. Muench	E. West
K. Elliott	A. F. Parks	M. Yamat
E. Foekler	T. E. Royster	

The Recloser and Sectionalizer Subcommittee of the IEEE Switchgear Committee, which reviewed and approved this standard, had the following membership:

D. J. Akers	W. Hurst	R. K. Ranjan
J. G. Angelis	E. M. Jankowich	T. E. Royster
H. L. Bowles	D. G. Kumbera	V. Scuderi
R. A. Brown	G. J. Luzzi	J. G. St. Clair
R. L. Capra	D. R. Martin	D. Stone
J. G. Domo	L. V. McCall	W. H. Walter
M. Ferguson	N. P. McQuin	J. G. Wood
I. J. Harvey	S. Meiners	A. Worland
G. R. House	A. F. Parks	A. Zawadzki

Copyright © 1998 IEEE. All rights reserved.
Copyright The Institute of Electrical and Electronics Engineers, Inc.
Provided by IHS under license with IEEE
No reproduction or networking permitted without license from IHS
Not for Resale

The following persons were on the balloting committee:

R. W. Alexander
J. G. Angelis
R. H. Arndt
S. Atkinson
L. R. Beard
H. L. Bowles
M. Brown
J. H. Brunke
R. L. Capra
A. Dixon
J. J. Dravis
C. J. Dvorak
P. W. Dwyer
R. D. Garzon
L. W. Gaussa
K. I. Gray
K. Hendrix
H. L. Hess
J. M. Jerabek
P. L. Kolarik
D. G. Kumbera
S. R. Lambert
W. E. Laubach
J. G. Leach
G. N. Lester
D. Lott
E. L. Luehring
P. C. Mayo
A. K. McCabe
L. V. McCall
W. C. McKay
D. C. Mills
A. C. Monroe
G. F. Montillet
F. J. Muench
J. F. O'Donnell
R. P. O'Leary
A. F. Parks
D. F. Peelo
G. O. Perkins
R. K. Ranjan
J. C. Ransom
D. N. Reynolds
H. C. Ross
T. E. Royster
L. H. Schmidt
E. W. Schmunk
C. A. Schwalbe
D. N. Sharma
G. St. Jean
D. Swindler
J. S. Tannery
S. H. Telander
F. C. Teufel
T. J. Tobin
E. F. Veverka
C. L. Wagner

The final conditions for approval of this standard were met on 13 July 1998. This standard was conditionally approved by the IEEE-SA Standards Board on 25 June 1998, with the following membership:

Richard J. Holleman, *Chair* **Donald N. Heirman,** *Vice Chair*
Judith Gorman, *Secretary*

Satish K. Aggarwal
Clyde R. Camp
James T. Carlo
Gary R. Engmann
Harold E. Epstein
Jay Forster*
Thomas F. Garrity
Ruben D. Garzon
James H. Gurney
Jim D. Isaak
Lowell G. Johnson
Robert Kennelly
E. G. "Al" Kiener
Joseph L. Koepfinger*
Stephen R. Lambert
Jim Logothetis
Donald C. Loughry
L. Bruce McClung
Louis-François Pau
Ronald C. Petersen
Gerald H. Peterson
John B. Posey
Gary S. Robinson
Hans E. Weinrich
Donald W. Zipse

*Member Emeritus

Yvette Ho Sang
IEEE Standards Project Editor

Copyright © 1998 IEEE. All rights reserved.

Copyright The Institute of Electrical and Electronics Engineers, Inc.
Provided by IHS under license with IEEE
No reproduction or networking permitted without license from IHS
Not for Resale

Contents

1. Scope 1
2. References 1
3. Definitions 2
4. Service conditions 3
   4.1 Usual service conditions 3
   4.2 Unusual service conditions 3
5. Ratings and test requirements 4
   5.1 General 4
   5.2 Rating information 4
   5.3 Preferred voltage ratings and related test requirements 6
   5.4 Continuous current ratings and related test requirements 6
6. Design tests 11
   6.1 General 11
   6.2 Tests on connectors and bushings used on PMFSG 12
   6.3 Testing of PMFSG 12
   6.4 Testing of switches installed in switched ways and fused-switched ways 18
   6.5 Testing of switching devices in fused-loadbreak ways 27
   6.6 Testing of fusing devices used in fused ways, fused-switched ways, or fused-loadbreak ways 30
7. Production tests 31
   7.1 Circuit resistance test 31
   7.2 Power-frequency withstand test 31
   7.3 Leak test 31
   7.4 Operating tests 31
8. In-service dc withstand test 32
9. Construction requirements 32
   9.1 Grounding provisions 32
   9.2 Manual operating provisions 32
   9.3 Switch position indicators 32
   9.4 Insulating medium quantity indicators 33
   9.5 Drain and replacement provisions 33
   9.6 Sampling and addition provisions 33
   9.7 Enclosure construction 33
   9.8 Nameplates 33
10. Shipping requirements 34

Copyright © 1998 IEEE. All rights reserved.
Copyright The Institute of Electrical and Electronics Engineers, Inc.
Provided by IHS under license with IEEE
No reproduction or networking permitted without license from IHS
Not for Resale

IEEE Standard Requirements for Pad-Mounted Fused Switchgear

1. Scope

This standard applies to assemblies of single-phase and three-phase, dead-front and live-front, pad-mounted, load-interrupter switches with expulsion, current-limiting, and other types of fuses in enclosures up to 38 kV rated maximum voltage.

2. References

This standard shall be used in conjunction with the following publications. When the following standards are superseded by an approved revision, the revision shall apply.

AEIC CS5-1994, Specifications for Cross-Linked Polyethylene Insulated Shielded Power Cables Rated 5 Through 46 kV.[1]

AEIC CS6-1987, Specification for Ethylene Propylene Rubber Insulated Shielded Power Cables Rated 5 Through 69 kV.

ANSI C37.46-1981 (Reaff 1992), American National Standard Specifications for Power Fuses and Fuse Disconnecting Switches.[2]

ANSI C37.47-1981 (Reaff 1992), American National Standard Specification for Distribution Fuse Disconnecting Switches, Fuse Supports, and Current-Limiting Fuses.[3]

ANSI C37.85-1989 (Reaff 1995), American National Standard for Switchgear—Alternating-Current High-Voltage Power Vacuum Interrupters—Safety Requirements for X-Radiation Limits.[4]

---

[1]AEIC publications are available from the Association of Edison Illuminating Companies, 600 N. 18th Street, P. O. Box 2641, Birmingham, AL 35291-0992, USA.

[2]This publication is available from the Institute of Electrical and Electronics Engineers, 445 Hoes Lane, P.O. Box 1331, Piscataway, NJ 08855-1331, USA.

[3]See Footnote 2.

[4]See Footnote 2.

Copyright © 1998 IEEE. All rights reserved.

and Electronics Engineers, Inc.
IEEE
itted without license from IHS
Not for Resale

ANSI C57.12.28-1996, American National Standard for Switchgear and Transformers—Pad-Mounted Equipment—Enclosure Integrity.[5]

IEEE Std 4-1995, IEEE Standard Techniques for High-Voltage Testing.[6]

IEEE Std 386-1995, IEEE Standard for Separable Insulated Connector Systems for Power Distribution Systems Above 600 V.

IEEE Std 1291-1993, IEEE Guide for Partial Discharge Measurement in Power Switchgear.

IEEE Std C37.09-1979 (Reaff 1989), IEEE Standard Test Procedure for AC High-Voltage Circuit Breakers Rated on a Symmetrical Current Basis (DoD).

IEEE Std C37.40-1993, IEEE Standard Service Conditions and Definitions for High-Voltage Fuses, Distribution Enclosed Single-Pole Air Switches, Fuse Disconnecting Switches, and Accessories.

IEEE Std C37.41-1994, IEEE Standard Design Tests for High-Voltage Fuses, Distribution Enclose Single-Pole Air Switches, Fuse Disconnecting Switches, and Accessories.

IEEE Std C37.48-1998, IEEE Guide for Application, Operation, and Maintenance of High-Voltage Fuses, Distribution Enclosed Single-Pole Air Switches, Fuse Disconnecting Switches, and Accessories.

IEEE Std C37.100-1992, IEEE Standard Definitions for Power Switchgear.

3. Definitions

The definitions of terms contained in this standard, or in other standards referred to in this document, are not intended to embrace all the legitimate meanings of the terms. They are applicable only to the subject treated in this standard. For additional definitions, see IEEE Std C37.100-1992.

3.1 fused-loadbreak way: A fused way incorporating an integral switching device operated by opening and closing a fuse assembly. (See Figure 1.)

3.2 fused-switched way: A way connected to the bus through a three-phase group-operated switch or single-phase switch in series with high-voltage fuses.

3.3 fused way: A way connected to the bus through a high-voltage fuse.

3.4 pad-mounted fused switchgear (PMFSG): Load-interrupter switch and fuse assemblies in which all energized parts are insulated and completely enclosed within an enclosure when the doors and covers are securely closed. The overall enclosure is of suitable environmental and tamper-resistant construction for outdoor, above-ground installation.

3.5 switched way: A way connected to the bus through a three-phase group-operated switch or single-phase switch.

3.6 way: A three-phase or single-phase circuit section containing a switch, fuse, combination switch and fuse, or bus.

[5]ANSI publications are available from the Sales Department, American National Standards Institute, 11 West 42nd Street, 13th Floor, New York, NY 10036, USA.

[6]IEEE publications are available from the Institute of Electrical and Electronics Engineers, 445 Hoes Lane, P.O. Box 1331, Piscataway, NJ 08855-1331, USA.

--`,,`-`-`,,`,,`,`,,`---
Copyright © 1998 IEEE. All rights reserved.
and Electronics Engineers, Inc.
IEEE
nitted without license from IHS
Not for Resale

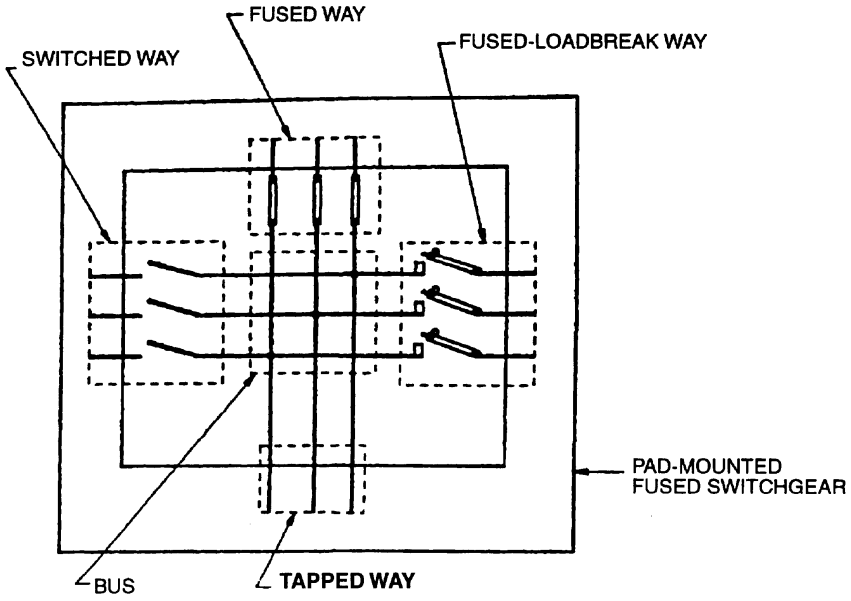

Figure 1—Example using definitions from Clause 3
(4-way pad-mounted switchgear shown)

4. Service conditions

4.1 Usual service conditions

Apparatus conforming to this standard shall be suitable for operation at nameplate rating when

a) The ambient air temperature is not above 40 °C or below –30 °C;
b) The altitude does not exceed 1000 m (3300 ft).

NOTE—Fuse time current characteristics and continuous-current ratings are affected by temperature (see IEEE Std C37.48-1987).

4.2 Unusual service conditions

4.2.1 Abnormal ambient temperature

The pad-mounted fused switchgear (PMFSG) may be applied at higher or lower ambient temperatures than specified, but performance may be affected and special consideration shall be given to these applications.

4.2.2 Altitudes above 1000 m (3300 ft)

This subclause is currently under review. The results will be incorporated in the next revision of this standard.

4.2.3 Other service conditions that may affect design and application

Where other unusual conditions exist, they should be brought to the attention of the manufacturer. An unusual condition is considered to be any installation, application, or operation outside the requirements defined in this standard.

Copyright © 1998 IEEE. All rights reserved.

and Electronics Engineers, Inc.
IEEE
nitted without license from IHS
Not for Resale

Among such unusual conditions are

a) Exposure to damaging fumes or vapors, excessive dust, explosive mixtures of dust or gases, and steam or excessive moisture;
b) Exposure to abnormal vibrations, shocks, and tilting;
c) Flooding;
d) Unusual frequency of operation;
e) High harmonic content currents and voltages.

5. Ratings and test requirements

5.1 General

The ratings designated in this standard are preferred and are not considered restrictive. Non-preferred ratings based on performance are acceptable under provisions of this standard when accepted by the equipment user. The ratings of the PMFSG are designations of operating limits under specified conditions of ambient temperature, temperature rise, etc., and include ratings indicated in 5.2.

5.2 Rating information

The ratings shall include overall ratings of the PMFSG and ratings of individual ways.

5.2.1 Overall ratings

The overall ratings of PMFSG shall include the following:

a) Rated power frequency;
b) Rated maximum voltage;
c) Rated lightning-impulse withstand voltage;
d) Rated power-frequency withstand voltage;
e) Rated short-circuit current.

5.2.1.1 Rated power frequency

The rated power frequency shall be the frequency at which the PMFSG and its components are designed to operate. The preferred rated power frequency is 50 Hz or 60 Hz.

5.2.1.2 Rated maximum voltage

The rated maximum voltage of PMFSG shall be that of the way with the lowest rating. A three-phase PMFSG containing one or more ways with components, such as fuses, single-phase switches, or fused-load-break devices rated for phase-to-ground voltage (maximum voltage divided by 1.732), shall have the designation “Grd-Y” (grounded-wye) added to the rated maximum voltage. The application of Grd-Y rated PMFSG should be limited to those three-phase applications where the recovery voltage, during switching or fault clearing across any Grd-Y rated way, does not exceed the phase-to-ground rating of components, and the three-phase system voltage does not exceed the rated maximum voltage of the PMFSG.

5.2.1.3 Rated lightning-impulse withstand voltage

The rated lightning-impulse withstand voltage shall be that of the way with the lowest rating.

Copyright © 1998 IEEE. All rights reserved.
and Electronics Engineers, Inc.
IEEE
nitted without license from IHS
Not for Resale

5.2.1.4 Rated power-frequency withstand voltage

The rated power-frequency withstand voltage shall be that of the way with the lowest rating.

5.2.1.5 Rated short-circuit current

The rated short-circuit current shall be the lowest of the following ratings of any of the ways, and shall be expressed in both symmetrical (sym) and asymmetrical (asym) rms amperes (peak amperes may also be included or substituted for asymmetrical amperes):

a) The rated interrupting current of the fuses, if applicable (see IEEE Std C37.41-1994);
b) The rated momentary and short-time current of the switches, loadbreak devices (if applicable), and bus;
c) The rated fault-closing current of the switches and loadbreak devices.

NOTES
1—A PMFSG consisting of only a single switched way and ways containing fuses may have a rated short-circuit current equal to that of the fuses, if it can be demonstrated that the switch can withstand the fault-closing and momentary duty, as limited by the fuses.
2—Bushings, separable connectors, terminators, or cables may not have short-circuit capabilities as high as the rating of the gear, and could limit the application.

5.2.2 Individual way ratings

The ratings of individual ways shall be assigned as shown in Table 1.

Table 1—Ratings of individual ways

Rating	Switched way	Fused-switched way	Fused-loadbreak way	Fused way	Tapped way
1. Rated maximum voltage[a]	X	X	X	X	X
2. Rated continuous current	X	X	X	X	X
3. Rated load switching current	X	X	X		
4. Rated loop switching current	X	X	X		
5. Rated cable-charging switching current	X	X	X		
6. Rated transformer-magnetizing switching current	X	X	X		
7. Rated momentary current[a]	X	X[b]	X[b]	X[b]	X
8. Rated short-time current and duration[a]	X	X[b]	X[b]	X[b]	X
9. Rated fault-closing current[a]	X	X	X		
10. Rated interrupting current[a]		X	X	X	
NOTE—Lines 7 through 10 shall be expressed as sym/asym or sym/peak ampere ratings.					

[a]These ratings are optional as they are covered by the overall rating of the PMFSG and equal or exceed those ratings of 5.2.1.
[b]These ratings are only applicable with fuse shorting bars.

Copyright © 1998 IEEE. All rights reserved.

and Electronics Engineers, Inc.
IEEE
nitted without license from IHS
Not for Resale

5.3 Preferred voltage ratings and related test requirements

See Table 2 for preferred rated values.

Table 2—Preferred voltage ratings and related test requirements

Line no.	Related test requirements							
	Rated maximum voltage (kV)			Rated lightning-impulse withstand voltage (kV)	Rated power-frequency withstand voltage (kV)	Power-frequency withstand production test voltage (kV)	DC withstand (15 min) (kV)[a]	Minimum partial discharge (corona) extinction voltage (kV)[b]
	Three-phase PMFSG		Single-phase PMFSG					
	Col. 1	Col. 2	Col. 3	Col. 4	Col. 5	Col. 6	Col. 7	Col. 8
1	15.5	15.5 Grd-Y	8.9	95	35	34	53	—
2	27	27 Grd-Y	15.5	125	60	40	78	—
3	38	38 Grd-Y	21.9	150	70	50	103	—
NOTE—When performing tests involving open contacts in a vacuum, the tests should be performed in accordance with ANSI C37.85-1989.								

[a]DC withstand values are design test values; they are not field test values.
[b]Values for partial discharge extinction voltage are under consideration by the working group.

5.4 Continuous-current ratings and related test requirements

See Tables 3 and 4 for preferred ratings.

5.4.1 Conditions of continuous-current rating

The rated continuous current is applicable under the usual service conditions defined in 4.1. Current ratings shall be based on the total temperature limits of the materials used for such parts. A temperature rise reference is given to permit testing at reduced ambient. PMFSGs shall have their ratings based on a 40 ^{o}C ambient air temperature outside the enclosure, with a 15 ^{o}C solar radiation factor added. The “effective” ambient is therefore 55 ^{o}C.

5.4.2 Limits of observable temperature rise

At rated current, the observable hottest temperature rise above ambient and the total temperature of each of the various parts shall not exceed the values listed in Table 5.

5.4.3 Application of fuses

Application of fuses may require derating of the allowable continuous current due to time-current characteristics (TCC) shift, reduction in the current required to produce element melting, or excessive total temperature of contacts, conducting joints, bushing terminals, insulation, etc. This is particularly true of current-limiting fuses subject to, or producing, high ambient temperatures. (See IEEE Std C37.48-1987.)

Copyright © 1998 IEEE. All rights reserved.
and Electronics Engineers, Inc.
IEEE
nitted without license from IHS
Not for Resale

Table 3—Preferred current ratings for switched ways

Line no.	Rated maximum voltage (kV)			Rated continuous current (A)		Rated load- and loop-interrupting current (A)		Rated cable-charging switching current (A)	Rated transformer-magnetizing switching current (A)		Rated short-circuit current[a] (sym A)		
	Three-phase PMFSG		Single-phase PMFSG	Main switch	Tap switch	Main switch	Tap switch		Main switch	Tap switch	Class 1	Class 2	Class 3
	Col. 1	Col. 2	Col. 3	Col. 4	Col. 5	Col. 6	Col. 7	Col. 8	Col. 9	Col. 10	Col. 11	Col. 12	Col. 13
1	15.5	15.5 Grd-Y	8.9	600	600	600	600	10	4	4	12 000	25 000	38 125
2	15.5	15.5 Grd-Y	8.9	600	200	600	200	10	4	4	12 000	N/A	N/A
3	27	27 Grd-Y	15.5	600	600	600	600	15	4	4	12 000	25 000	38 125
4	27	27 Grd-Y	15.5	600	200	600	200	15	4	4	12 000	N/A	N/A
5	38	38 Grd-Y	21.9	600	600	600	600	20	4	4	10 000	20 000	38 125
6	38	38 Grd-Y	21.9	600	200	600	200	20	4	4	10 000	N/A	N/A

NOTES
1—The test voltage for the loop switching current test shall be no less than 20% of the preferred rated maximum voltage.
2—The rated short-time current is equal to the rated short-circuit current (sym) and shall be applied for a rated duration of 1 s.
3—The momentary current (asym rms) and fault-closing current (asym rms) test values are equal to 1.55 times the rated short-circuit current, and the corresponding peak currents (A) are equal to 2.6 times the rated short-circuit current, corresponding to a circuit *X* to *R* ratio of 17. Rated momentary current, rated short-time current, and rated fault-closing current shall be expressed in both symmetrical and asymmetrical rms amperes (peak amperes may be included or substituted for asymmetrical amperes).

[a]Short-circuit current ratings may be limited by the capabilities of bushings, separable connectors, terminators, or cables used on production switches. Design tests performed to substantiate the short-circuit values in Table 3 shall be made on switches with bushings, separable connectors, terminators, and cables of adequate capability.

Copyright © 1998 IEEE. All rights reserved.

Table 4—Preferred current ratings for fused ways, fused-switched ways, and fused-loadbreak ways

Line no.	Rated maximum voltage (kV)			Rated continuous current (A)	Rated load and loop switching current (A)	Rated cable-charging switching current (A)	Rated transformer-magnetizing switching current (A)	Rated short-circuit and interrupting current (sym A)[a]	
	Three-phase PMFSG		Single-phase PMFSG					Class 1	Class 2
	Col. 1	Col. 2	Col. 3	Col. 4	Col. 5	Col. 6	Col. 7	Col. 8	Col. 9
1	15.5	15.5 Grd-Y	8.9	200	200	5	4	12 000	N/A
2	15.5	15.5 Grd-Y	8.9	400	400	5	4	12 000	25 000
3	27	27 Grd-Y	15.5	200	200	8	4	12 000	N/A
4	27	27 Grd-Y	15.5	400	400	8	4	12 000	25 000
5	38	38 Grd-Y	21.9	200	200	10	4	10 000	N/A
6	38	38 Grd-Y	21.9	400	400	10	4	10 000	20 000

NOTES
1—The test voltage for the loop switching test shall be no less than 20% of the preferred rated maximum voltage.
2—Fused ways have no switching current test requirements.
3—The short-time current test value is equal to the rated short-circuit current (sym) and shall be applied for a rated duration of 1 s.
4—The momentary current (asym rms) and fault-closing current (asym rms) test values are equal to 1.55 times the rated short-circuit current, and the corresponding peak currents (A) are equal to 2.6 times the rated short-circuit current, corresponding to a circuit X/R ratio of 17. Rated momentary current, rated short-time current, and rated fault-closing current shall be expressed in both symmetrical and asymmetrical rms amperes (peak amperes may be included or substituted for asymmetrical amperes).

[a]Short-circuit current ratings may be limited by the capabilities of bushings, separable connectors, terminators, or cables used on production switches. Design tests performed to substantiate the short-circuit values in Table 4 shall be made on switches with bushings, separable connectors, terminators, and cables of adequate capability.

Copyright © 1998 IEEE. All rights reserved.

Table 5—Limits of total temperature and temperature rise

Contacts, conducting joints, bushings terminals, and insulation (see NOTES 1, 2, and 3)	Limit of observable hottest spot	
	Temperature rise above air surrounding enclosure (^{o}C)	Total temperature (^{o}C)
1. Contacts (see NOTES 4, 6, and 7)		
Bare copper and bare copper alloy		
in air	20	75
in SF_6	95	150
in oil	25	80
Silver-coated or nickel-coated		
in air	50	105
in SF_6	95	150
in oil	35	90
Tin-coated		
in air	40	95
in SF_6	50	105
in oil	35	90
2. Connections, bolted or the equivalent (see NOTES 5, 6, and 7)		
Bare copper, bare copper alloy, or bare aluminum alloy		
in air	35	90
in SF_6	95	150
in oil	45	100
Silver-coated, nickel-coated, tin-coated, or the equivalent		
in air	70	125
in SF_6	95	150
in oil	45	100
3. Terminals (see NOTE 8)		
Separable connectors: 200 A and 600 A bushings	35	90
Bolted connections		
unplated	35	90
silver-coated, nickel-coated, tin-coated, or the equivalent	50	105
4. Insulation (see NOTE 9)		
Oil 2.5 cm (1 in) below surface (top oil)	35	90
Class 90 ^{o}C insulation	35	90
Class 105 ^{o}C insulation	50	105
Class 130 ^{o}C insulation	75	130
Class 155 ^{o}C insulation	100	155
Class 180 ^{o}C insulation	125	180
Class 220 ^{o}C insulation	165	220

NOTES

1—The same part may belong to several categories as listed in the table. In this case, the total temperature limits and temperature-rise limits are the lowest among the relevant categories.

2—For vacuum switching devices, the total temperature limits and temperature-rise limits are not applicable for parts in vacuum. The remaining parts shall not exceed the limits given in the table.

3—Total temperature limits may be restricted by the temperature of surrounding insulating materials not directly in contact with current-carrying parts.

4—When contact parts have different coatings, the total temperature limits and temperature-rise limits shall be those of the part having the lower limits in the table.

5—When connection parts have different coatings, the total temperature limits and temperature-rise limits shall be those of the part having the higher limits in the table.

Copyright © 1998 IEEE. All rights reserved.

and Electronics Engineers, Inc.
IEEE
nitted without license from IHS
Not for Resale

Table 5 notes continued:

6—When materials other than those given in the table are used, their properties shall be considered in order to determine the total temperature limits and temperature-rise limits.

7—Contacts or connections in other than air, oil, or SF_6 may be operated at other temperatures, providing it can be shown by experience or tests that accelerated deterioration will not occur.

8—The total temperature of terminals may be limited by the temperature limits of insulated cable, connectors, or terminators connected to the terminals. The temperature limits of terminals should not exceed 75 °C for high molecular weight polyethylene (HMWPE) insulated cable.

9—For the purpose of establishing temperature limits, insulating material shall be classified as follows:

Class 90 °C insulation. Materials or combinations of materials, such as cotton, silk, and paper, without impregnation. Other materials or combinations of materials may be included in this class if, by experience or accepted tests, they can be shown to be capable of operation at 90 °C.

Class 105 °C insulation. Materials or combinations of materials, such as cotton, silk, and paper, when suitably impregnated or coated, or when immersed in a dielectric liquid such as oil. Other materials or combinations of materials may be included in this class if, by experience or accepted tests, they can be shown to be capable of operation at 105 °C.

Class 130 °C insulation. Materials or combinations of materials, such as mica and glass fiber, with suitable bonding substances. Other materials or combinations of materials, not necessarily inorganic, may be included in this class if, by experience or accepted tests, they can be shown to be capable of operation at 130 °C.

Class 155 °C insulation. Materials or combinations of materials, such as mica and glass fiber, with suitable bonding substances. Other materials or combinations of materials, not necessarily inorganic, may be included in this class if, by experience or accepted tests, they can be shown to be capable of operation at 155 °C.

Class 180 °C insulation. Materials or combinations of materials, such as silicone elastomer, mica, and glass fiber, with suitable bonding substances, such as appropriated silicone resins. Other materials or combinations of materials may be included in the class if, by experience or accepted tests, they can be shown to be capable of operation at 180 °C.

Class 220 °C insulation. Materials or combinations of materials that, by experience or accepted tests, can be shown to be capable of operation at 220 °C.

Over 220 °C insulation. Insulation that consists entirely of mica, porcelain, glass, quartz, and similar inorganic materials. Other materials or combinations of materials may be included in this class if, by experience or accepted tests, they can be shown to be capable of operation at temperatures over 220 °C.

a) Insulation is considered to be “impregnated” when a suitable substance provides a bond between components of the structure, and also a degree of filling or surface-coverage sufficient to give adequate performance under the extremes of temperature, surface contamination (moisture, dirt, etc.), and mechanical stress expected in service. The impregnant shall not flow or deteriorate enough at operating temperature so as to seriously affect performance in service.
b) The electrical and mechanical properties of the insulation shall not be impaired by the prolonged application of the limiting insulation temperature permitted for the insulation class. The word “impaired” is used here in the sense of causing any change that could disqualify the insulating material from continuously performing its intended function, whether it is creepage spacing, mechanical support, or dielectric barrier action.
c) In the preceding definitions, the words “accepted tests” are intended to refer to recognized test procedures established for thermal evaluation of materials by themselves or in simple combinations. Experience or test data used in classifying insulating materials is distinct from the experience or test data derived for the use of materials in complete insulation systems. The thermal endurance of complete systems may be determined by applicable technical committees. A material that is classified as suitable for a given temperature in the preceding may be found suitable for a different temperature, either higher or lower, by an insulation system test procedure. For example, it has been found that some materials suitable for operation at one temperature in air may be suitable for a higher temperature when used in a system operated in an inert gas atmosphere.
d) It is important to recognize that other characteristics, in addition to thermal endurance, such as mechanical strength and moisture resistance, are required in varying degrees in different applications for the successful use of insulating materials.

Copyright © 1998 IEEE. All rights reserved.
and Electronics Engineers, Inc.
IEEE
nitted without license from IHS
Not for Resale

6. Design tests

Design tests are those tests performed by the manufacturer to determine the adequacy of the design of a particular type, style, or model of equipment or its component parts for meeting its assigned ratings, and for operating satisfactorily under normal service conditions or under special conditions, if specified. These tests may be used to demonstrate compliance with applicable industry standards.

Design tests are not required to demonstrate a margin in excess of assigned ratings. Conformance testing to verify rated values is expected to be done at values less than or equal to the ratings. For application purposes, the ratings are to be treated as maximum values.

6.1 General

The intention of this standard is to adequately test the PMFSG as an entity while recognizing the modularity of this type of apparatus. Switches, fuses, fuse-switch combinations, and fuses with an integral loadbreak device are assembled as modules in various combinations of ways, in specialized enclosures, to construct a given PMFSG unit. The capability of the PMFSG to meet all its ratings shall be demonstrated by successful tests on the entire unit, or by references to successful tests on individual ways, components, interconnections, and the bus assembly that comprise the unit. In general, it shall not be required to again test a way or component, for instance an interrupter switch in the PMFSG, if it has already been tested in an equivalent enclosure.

6.1.1 Condition of PMFSG to be tested

The PMFSG shall be new and in good condition.

6.1.2 Mounting of the PMFSG

The PMFSG shall be mounted in the usual service position for which it is designed.

6.1.3 Maintenance

Maintenance, which could be expected to enhance subsequent design test results during the sequential testing, shall not be performed on the PMFSG. Such maintenance includes, but is not limited to, replacing, filtering, or reconditioning the insulation medium, or repairing the current-carrying contacts. Equipment repairs may be made where it can be demonstrated that such repairs would not influence the cumulative conditioning effects of previous tests in the design test sequence.

6.1.4 Frequency

The frequency of the supply voltage shall be the rated power frequency (±2%).

Other frequencies may be used upon agreement between the user and the manufacturer. Care should be exercised in the interpretation of the results, taking into account all significant facts such as the type of switch and the type of test performed.

--`,,`-`-`,,`,,`,`,,`---
Copyright © 1998 IEEE. All rights reserved.

and Electronics Engineers, Inc.
IEEE
nitted without license from IHS
Not for Resale

6.2 Tests on connectors and bushings used on PMFSG

PMFSGs sometimes use, as an integral component, connectors, bushings, and terminators that are covered by other standards. All qualification testing per those standards does not need to be repeated on the PMFSG as long as clearances, mounting methods, and installation practices follow the appropriate standard and the manufacturer's installation requirements.

Connectors, bushings, and terminators that are an integral part of the PMFSG shall be part of the PMFSG when the PMFSG is subjected to the test of 6.3.

6.3 Testing of PMFSG

The design tests in Table 6 shall be made on the PMFSG, including all ways (switched, fused, fused-switch, fused-loadbreak, etc.), buses, and interconnections, as appropriate.

Table 6—Design tests for PMFSG

Test	Reference
1. Dielectric tests Lightning-impulse withstand tests Power-frequency withstand test	6.3.1 6.3.1.4 6.3.1.5
2. Continuous Current Test	6.3.2
3. Short-circuit current withstand tests Momentary (peak) current tests Short-time current test	6.3.3 6.3.3.3 6.3.3.5
4. Partial discharge (corona) level test	6.3.4
5. DC withstand test	6.3.5
6. Pressure test	6.3.6

6.3.1 Dielectric tests

Insulation withstand tests are made to determine the ability of the insulating materials and spacing to withstand specified overvoltages for a specified time.

6.3.1.1 Points of application of test voltage

The dielectric withstand test shall be applied to each phase, pole, or bus individually, with the mounting and adjacent poles, phases, or buses grounded, and with isolating gaps in specific ways both in the open and closed positions. Isolating gaps shall be tested across the open gap.

Figure 2 shows the test arrangements for a switched, fused-switched, fused, and fused-loadbreak way. Only the open gaps used for isolation need to be tested.

Switches shall be tested across the open contacts. When fusing devices in a fused way or fused-loadbreak way are used for an isolating gap, they shall be tested across the open contacts with the fusing device disengaged, and if appropriate, removed. If the fusing device is intended to be left in the mounting in the

Copyright © 1998 IEEE. All rights reserved.
and Electronics Engineers, Inc.
IEEE
nitted without license from IHS
Not for Resale

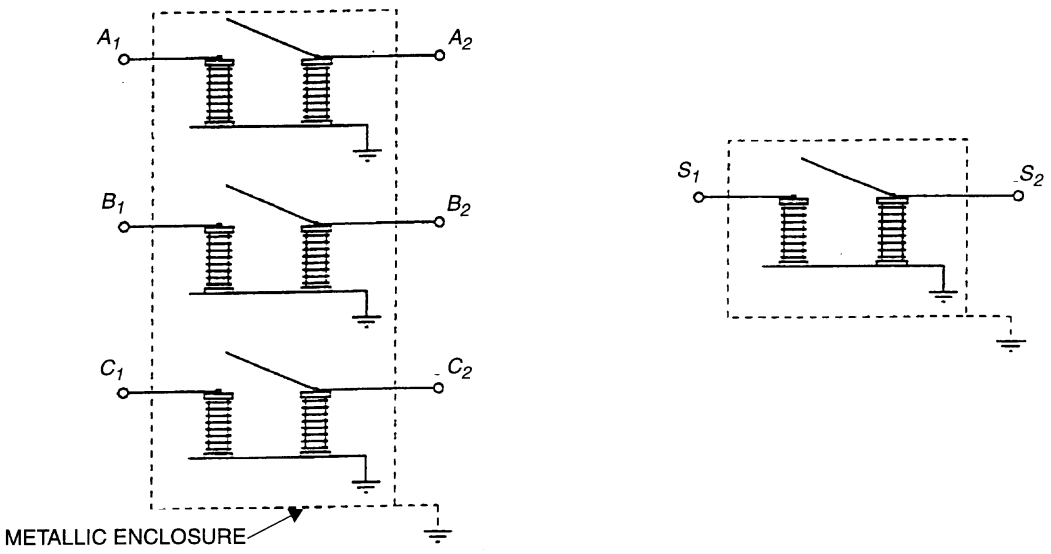

Dielectric test arrangements for ac tests and impulse tests									
Line no.	Device state[a]	Terminal connection							
		Three-pole						Single-pole	
		A_1	B_1	C_1	A_2	B_2	C_2	S_1	S_2
1	Closed	G	V	G	N	N	N	V	N
2	Closed	V	G	G	N	N	N		
3	Closed	G	G	V	N	N	N		
4	Open	G	V	G	G	G	G	V	G
5	Open	V	G	G	G	G	G		
6	Open	G	G	V	G	G	G		
7	Open	G	G	G	G	V	G	G	V
8	Open	G	G	G	V	G	G		
9	Open	G	G	G	G	G	V		
10[b]	Open	V	V	V	G	G	G	V	G
11[b]	Open	G	G	G	V	V	V	G	V

KEY
V–Connect to test voltage
G–Connect to ground
N–No connection required

NOTES
1–When performing a test involving open contacts in a vacuum, the test should be performed in accordance with ANSI C37.85-1989.
2–For production test, use lines 1, 2, 3, 10, and 11.

[a]For fusing devices, “open” refers to the disengaged position.
[b]Lines 10 and 11 are used when the fusing device is appropriately removed from the mounting. In these cases, lines 4 through 9 need not be tested.

Figure 2—Connections for dielectric tests

Copyright © 1998 IEEE. All rights reserved.

and Electronics Engineers, Inc.
IEEE
nitted without license from IHS
Not for Resale

disengaged position, then the disengaged position test shall be performed with the device in that position. If the fusing device is not intended to be left in the mounting in the disengaged position, then it is not necessary to perform the test for energized parts to ground, or between poles, with the fusing device in the disengaged position. Also, if the fusing device is in a fused-switched way and the switching device is intended to provide the open gap withstand, then open position testing of the fuse should not be performed.

Conditioning of the open gap to improve dielectric performance is not allowed. Five de-energized mechanical operations of the isolating device are required before dielectric testing.

During these tests, all metallic parts of the enclosure and mounting shall be grounded.

6.3.1.2 Temperature

Dielectric tests shall be made at the temperature prevailing in the test area.

6.3.1.3 Dielectric test procedures and voltage measurements

The dielectric test procedures, voltage waveform specifications for both power frequency and lightning impulse, and the methods of voltage measurements shall be in accordance with IEEE Std 4-1995.

6.3.1.4 Lightning-impulse withstand tests

The PMFSG shall withstand a full wave 1.2×50 μs voltage equal to the rated lightning-impulse withstand voltage. (See Table 2 for preferred ratings.) At least three positive and three negative impulses shall be applied to the test specimen. If a flashover occurs on only one test during any group of three consecutive tests, nine more tests shall be made. If the PMFSG withstands all nine of the second group of tests, the flashover in the first group shall be considered a random flashover, and the PMFSG shall be considered as having passed the test. If an additional flashover occurs, the PMFSG shall be considered as having failed the test.

6.3.1.5 Power-frequency withstand test

The PMFSG shall withstand its rated power-frequency withstand voltage for 1 min with no disruptive discharge. (See Table 2 for preferred ratings.) The test voltage shall be raised to the specified value within 30 s.

6.3.2 Continuous current test

6.3.2.1 Test conditions

The PMFSG shall be installed in a closed room substantially free from air currents other than those generated by heat from the PMFSG being tested. Each way containing unique components and buses, including switched, fused-switched, fused, fused-loadbreak, or bus ways, shall be tested individually along with the appropriate interconnections. Current may pass through the way and exit the PMFSG through the bus or one or more ways. It is not a requirement to test all ways simultaneously. Testing shall be limited to ways that will be expected to attain the greatest total temperatures of components by virtue of a combination of minimum enclosed volume, minimum cooling features, and maximum heat-producing components.

For ways with fusing devices, the fusing devices and mountings of the maximum current rating assigned to a way shall be used. A fuse shorting bar, if available from the manufacturer, may be used. If a fusing device at its maximum current rating produces more heat at a lower current than a shorting bar at rated continuous current, then the fusing device shall also be used for testing at the lower current.

Copyright © 1998 IEEE. All rights reserved.
and Electronics Engineers, Inc.
IEEE
nitted without license from IHS
Not for Resale

6.3.2.2 Connections

Connectors and terminators suitable for the continuous current under test shall be used to connect external conductors to the PMFSG [minimum 1.22 m (4 ft)]. The conductors shall be 1000 kcmil aluminum, or the equivalent, for 600 A tests; 500 kcmil aluminum, or the equivalent, for 400 A tests; and 4/0 aluminum, or the equivalent, for 200 A tests. Smaller conductors may be used at the option of the manufacturer.

6.3.2.3 Test procedure

The rated continuous current (see Tables 3 and 4 for preferred ratings) of the way of a PMFSG at rated frequency shall be applied continuously to all phases, poles, or buses in a way until the temperatures become stable. A three-phase current source should be used for three-phase devices. A single-phase current source, with all poles in series, may be used as long as the temperature rises are not increased unduly.

The temperatures shall be considered stable when three consecutive values of temperature rise, taken at 30 min intervals at all points where readings are being taken, show a maximum variation of 1°. The determination of temperature shall be by thermocouples, or by mercury, spirit, or resistance thermometers. The value of the ambient temperature during these tests shall be taken as that of the air surrounding the PMFSG, and shall not be less than 10 °C, nor more than 40 °C. The ambient temperature shall be determined by means of a thermocouple (or thermometer) placed 30 cm (12 in) above, and 30 cm (12 in) to one side of the PMFSG.

In order to avoid errors due to the time lag between the temperature of apparatus and the variations in the ambient temperature, all reasonable precautions must be taken to reduce these variations. Thus, when the ambient temperature is subject to such variations that error in taking the temperature rise might result, the thermocouple (or thermometer) for determining the ambient temperature should be immersed in a suitable liquid (such as oil), in a suitable heavy cup. A convenient form for such an oil cup consists of a metal cylinder with a hole drilled partly through it. This hole is filled with oil, and the thermocouple (or thermometer) response to various rates of temperature change will depend largely upon the size, kind of material, and the mass of the containing cup, and may be further regulated by adjusting the amount of oil in the cup. The larger the apparatus under test, the larger should be the metal cylinder employed as an oil cup in the determination of the cooling air temperature. The smallest size of oil cup employed in any case shall consist of a metal cylinder 25 mm (1 in) in diameter and 50 mm (2 in) in height.

6.3.3 Short-circuit current withstand tests

The purpose of this test is to verify that the PMFSG is capable of carrying rated short-circuit current, including its rated momentary (peak) current, and its rated short-time current for its rated short-time current duration.

6.3.3.1 General

Short-circuit current ratings are expressed in symmetrical rms amperes. The asymmetrical currents during momentary and fault-closing may be expressed in asymmetrical rms amperes, including the dc component at the major peak of the maximum cycle, as determined from the envelope of the current wave. (See Tables 3 and 4 for preferred ratings.) The asymmetrical rms amperes may be measured in accordance with IEEE Std C37.09-1979. The asymmetrical current can be considered to be obtained if the peak value equals or exceeds the corresponding peak current of the asymmetrical current.

During momentary and fault-closing tests, the power-frequency component of the test current shall, in principle, be equal to the rated symmetrical short-circuit current specified. Due to the ac current decrement in laboratories, it may not be possible to obtain the specified rated symmetrical current for the entire test duration.

Copyright © 1998 IEEE. All rights reserved.

and Electronics Engineers, Inc.
IEEE
nitted without license from IHS
Not for Resale

Certain laboratory circuits may yield proper asymmetrical (peak) current but higher than rated symmetrical current. These circuits may be used, but it is not a requirement that the device withstand the higher symmetrical currents.

6.3.3.2 Test conditions

Conductors used in this test shall be solidly connected to the device and oriented to represent typical service conditions.

Three-phase PMFSGs shall be tested with three-phase currents, and single-phase PMFSGs shall be tested with a single-phase current. (See Figure 3.) The return path for a single-phase test shall result in the most onerous test conditions. Tests may be conducted at any voltage up to the rated voltage of the switch.

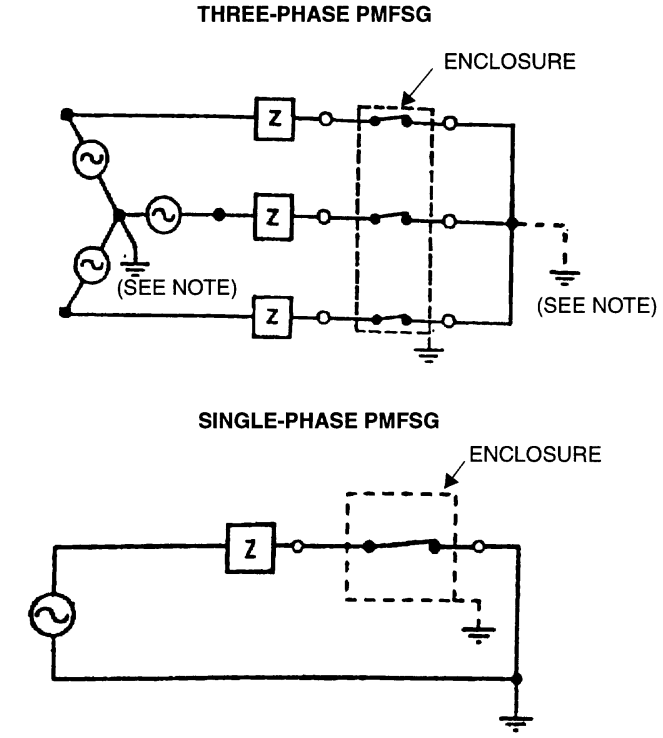

Figure 3—Momentary, fault-closing, and short-time test circuits

Only those ways, interconnections, and buses rated for short-circuit withstand need to be tested. Fused, fused-loadbreak, and fused-switched ways should not be tested unless the PMFSG manufacturer rates the way with a shorting bar. Each unique way shall be tested with the interconnections and buses.

The current may pass through the way and exit the PMFSG through another bus or way, allowing two ways and buses to be tested simultaneously.

The momentary (peak) current test shall be performed as part of a testing sequence when specified for a particular component or way.

Copyright © 1998 IEEE. All rights reserved.
and Electronics Engineers, Inc.
IEEE
nitted without license from IHS
Not for Resale

6.3.3.3 Momentary (peak) current tests for switched ways and bus

The PMFSG shall withstand three sets of momentary tests. Each set shall include a sequence of three periods of current, with an interval of 10 s ± 1 s between each of the three periods, to simulate typical reclosing that may occur in partially overhead and underground circuits. The duration of each period shall be not less than 10 cycles. Refer to the test circuit in Figure 3. This test is performed as part of the sequence testing for switches used in switched ways.

The asymmetrical (peak) current of the first major loop of one phase of any period of current flow of each set shall not be less than the rated momentary (peak) current. (See Tables 3 and 4 for preferred ratings.)

6.3.3.4 Momentary (peak) current test for fused ways, fused-switched ways, and fused-loadbreak ways having shorting bars

The test shall be performed on new equipment that is installed following the fuseholder manufacturer's instructions. A shorting bar, sized for the required current, shall be installed following the fuseholder manufacturer's recommendations.

The fused way, fused-switch way, or fused-loadbreak way shall withstand a single momentary current test. The asymmetrical rms (peak) current of the first major loop in one of the phase shall not be less than the rated momentary (peak) current. (See Tables 3 and 4 for preferred ratings.) The duration of the momentary current shall not be less than 10 cycles.

6.3.3.5 Short-time current test

The PMFSG should not have previously been subjected to any interrupting tests.

Three-phase PMFSGs may be tested on a three-phase circuit, or may be tested single-phase by testing two adjacent poles in series.

The PMFSG shall be subjected to a single test for the rated short-time current duration (minimum) at the rated short-circuit current. (See Tables 3 and 4 for preferred ratings.) For practical purposes, this current shall be taken as the integrated heating equivalent of the short-time ratings. The maximum application period shall not exceed 200% of the rated duration.

The shorting bar and fuseholder shall be assigned a short-time current rating by the manufacturer per applicable industry standards, such as IEEE Std C37.40-1993 and IEEE Std C37.41-1994. The rated duration of the short-time current may be either 15 cycles or 3 s, as specified in those standards, or the device may also be assigned a 1 s rated duration corresponding to the ratings in this standard. If the shorting bar used in a fuseholder is assigned a short-time current duration of 15 cycles, then this test need not be performed if the manufacturer's recommendations are followed. If a longer short-time current duration is assigned, then a short-time current test shall be performed to verify the performance of the interconnecting bus and mounting.

6.3.3.6 Condition of PMFSG after short-circuit current withstand test

Except for momentary tests conducted as part of an interrupting sequence test on a switch, there shall be no visible damage to the PMFSG after the tests have been completed. However, the tests may result in some visual evidence of the device having passed current, such as slight contact markings.

When visual inspection is not feasible, or there is a question of contact marking, the rating shall be considered met when the PMFSG and its components withstand repeated mechanical operations without cumulative damage, and they are capable of carrying rated continuous current without exceeding the temperature limits specified.

Copyright © 1998 IEEE. All rights reserved.

and Electronics Engineers, Inc.
IEEE
nitted without license from IHS
Not for Resale

6.3.4 Partial discharge (corona) level test

Partial discharge (corona) testing is not standardized. Users and manufacturers are encouraged to use IEEE Std 1291-1993 to develop test techniques and discharge levels for future standardization.

6.3.5 DC withstand test

The purpose of this test is to verify that the PMFSG is capable of withstanding the dc test voltages that may be applied to installed cable systems. (See Figure 2.)

6.3.5.1 Test procedure

The rated dc 15 min withstand voltage of negative polarity shall be applied to the PMFSG. The voltage shall be raised gradually to the specified test voltage (see Table 2, column 7) and maintained at that voltage for 15 min. During the test, the metallic enclosure and all unenergized terminals shall be grounded.

6.3.6 Pressure test

The purpose of this test is to verify that PMFSG with sealed tanks will withstand pressure, and remain operable, when subjected to a positive pressure resulting from the operation of the switch or fuse (e.g., temperature rise, current interrupting, and fault-closing).

6.3.6.1 Pressure test procedure

For this test the PMFSG shall be pressurized to the maximum operating pressure conditions expected during maximum temperature, altitude, etc., as specified herein. The tank shall not deform sufficiently to impair operation of the switch or alignment of separable fuse contacts, or impair the integrity of the liquid or gas seals.

6.4 Testing of switches installed in switched ways and fused-switched ways

6.4.1 General

The design tests specified in the following subclauses shall be performed on the same switch in the sequence listed.

If the PMFSG utilizes expulsion fuse devices that alter the dielectric, then the dielectric shall be preconditioned prior to the switch testing sequence. Preconditioning shall consist of six fuse operations at rated interrupting current of the expulsion fuse according to IEEE Std C37.41-1994. These six test operations may be performed on an individual fuseholder and fuse, or they may be distributed over the fused ways installed in the PMFSG. These tests shall be conducted on the enclosure with the manufacturer's recommended minimum volume of insulating fluid.

For ways using interrupters that do not permanently alter the dielectric of the PMFSG, such as vacuum interrupters, and where it can be demonstrated that the rated power-frequency withstand voltage can be met after six fuse operations, it is not required to perform dielectric preconditioning by fuse testing as part of the sequence testing.

For PMFSG units that use the same loadbreak switch in both a switched way and in a fused-switched way, a test of both switches in the same unit is not required.

Copyright © 1998 IEEE. All rights reserved.
and Electronics Engineers, Inc.
IEEE
nitted without license from IHS
Not for Resale

6.4.2 Testing sequence

Table 7 shows the sequence that shall be followed. The tests listed in row 2 can be performed in any order, but all shall be completed prior to proceeding with row 3. The remainder of the tests shall be performed in the listed order.

The complete sequence of design tests need not be performed on each design variation of a previously certified switch design. The PMFSG manufacturer shall certify that all requirements are met, based on test history of similar units and conformance with applicable installation methods and practices.

Table 7—Sequence for testing switches in switched ways and fused-switched ways

Test	Reference
1. Dielectric preconditioning, when applicable	6.4.1
2. Switching current tests Load switching current tests Loop switching current tests Cable-charging switching current test	6.4.3 6.4.3.3 6.4.3.4 6.4.3.5
3. Mechanical operation test	6.4.4
4. Momentary (peak) current tests	6.4.5
5. Fault-closing current test	6.4.6
6. Power-frequency withstand test (Table 2, Power-frequency withstand production test voltage)	6.4.7
7. Thermal runaway test	6.4.8
8. Mechanical operation test	6.4.9

6.4.3 Switching current tests

The purpose of these tests is to verify that the switch is capable of closing and interrupting currents within its ratings.

6.4.3.1 Power-frequency voltage and current measurements

During switching tests, the test voltage shall be greater than or equal to the specified value in the appropriate test subclause of 6.4.3. The voltage shall be measured across each pole of the device under test. For three-phase tests, the voltage shall be taken as the average of all three phases. No one phase shall deviate from the average by more than 10%. For interrupting tests, the voltage shall be measured immediately after the last pole is interrupted. For closing tests, the voltage shall be measured before the first pole closes.

Measurements across individual pole units can be converted to an equivalent three-phase voltage by multiplying by 1.73. The rms voltage can be taken as the peak-to-peak voltage divided by 2.83, or any other means suitable for determining rms voltage may be used.

The test current shall be equal to or greater than the rated current, or be within the range of currents specified in the appropriate test subclause. For three-phase tests, the current shall be reported as the average of the power-frequency component of the three-phase currents, and no one-phase current shall differ from the aver-

Copyright © 1998 IEEE. All rights reserved.

and Electronics Engineers, Inc.
IEEE
nitted without license from IHS
Not for Resale

age by more than 10%. For interrupting tests, the current shall be measured immediately before the first pole interrupts the circuit, and the current shall be essentially sinusoidal and substantially free of energization transients and dc offset currents. For closing tests, the current shall be the power-frequency component measured immediately after the last pole closes.

6.4.3.1.1 Load and loop switching voltages

For interrupting tests, the inherent peak transient recovery voltage shall be greater than or equal to the value specified in Figures 4 through 7, and the time-to-peak voltage shall be less than or equal to the time specified. The transient recovery voltage shall be measured on the first pole to clear. Suitable high-frequency recording instrumentation shall be used. For load switching current, the first maximum voltage of recovery voltage is inherently depressed because of the transient from the load circuit; only subsequent peaks (E_1, E_2, and E_3) shall be used to determine the power-frequency recovery voltage. (See Figure 8.) Any dc components shall be ignored in determining power-frequency recovery voltages.

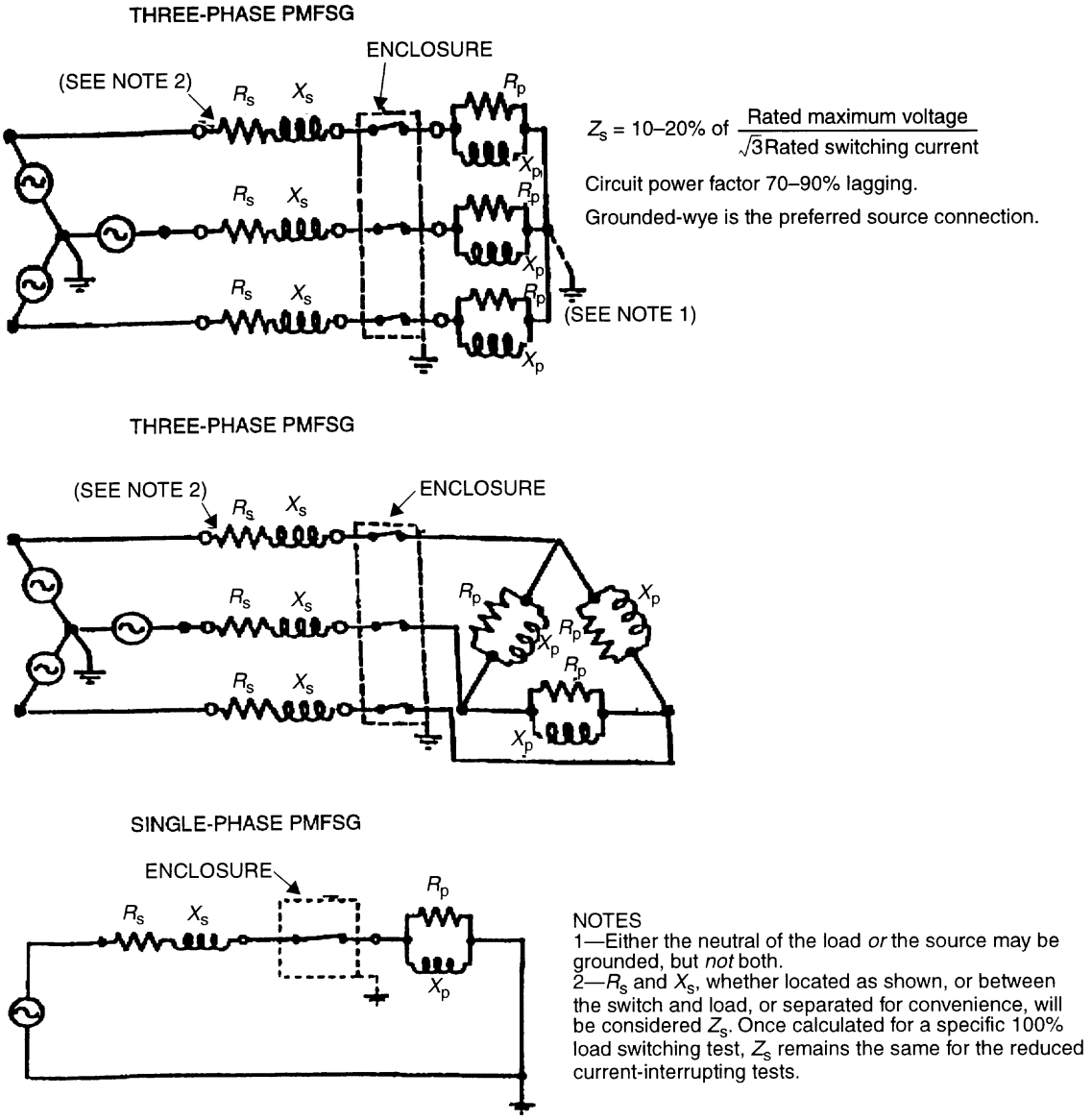

Figure 4—Load switching test circuits

Copyright © 1998 IEEE. All rights reserved.
and Electronics Engineers, Inc.
IEEE
nitted without license from IHS
Not for Resale

6.4.3.2 Single-phase testing

Where single-phase testing of a switch to establish a three-phase rating is permitted, all such tests shall be performed with the other poles grounded. Testing of single-phase switches shall be under the conditions specified in the description of each test.

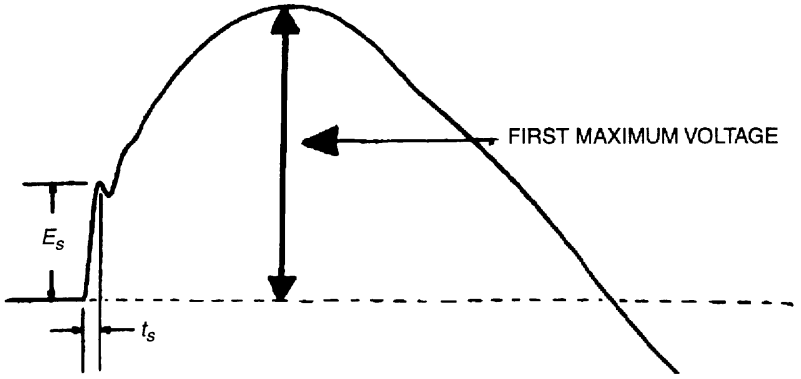

Configuration	Rated maximum voltage (kV)	Peak E_s (kV minimum)	Time-to-peak t_s (μs maximum)
3-phase PMFSG	15.54 27 38	4.0 7.6 13	180 290 424
1-phase PMFSG	8.9 15.5 21.9	2.7 5.1 8.6	180 290 424

NOTES
1–TRV is for the first pole to open for three-phase PMFSG.
2–Capacitance and damping resistances may be added, as required, to adjust the TRV to the specified values.
3–For conformance testing, the specified value of E_s shall not be exceeded, and the value of the time-to-peak shall not be less than specified.

Figure 5—Inherent transient recovery voltage (TRV) for 100% load switching current tests

6.4.3.3 Load switching current tests

The switch shall be capable of switching all load currents up to, and including, its rated load switching current. (See Table 3 for preferred ratings.) The switch shall be tested at currents in accordance with Table 8.

Table 8—Load switching tests

No. of operations closing and opening	Rated load switching current (%)
10 30 10	Not less than 100 40–60 5–20

Copyright © 1998 IEEE. All rights reserved.

and Electronics Engineers, Inc.
IEEE
nitted without license from IHS
Not for Resale

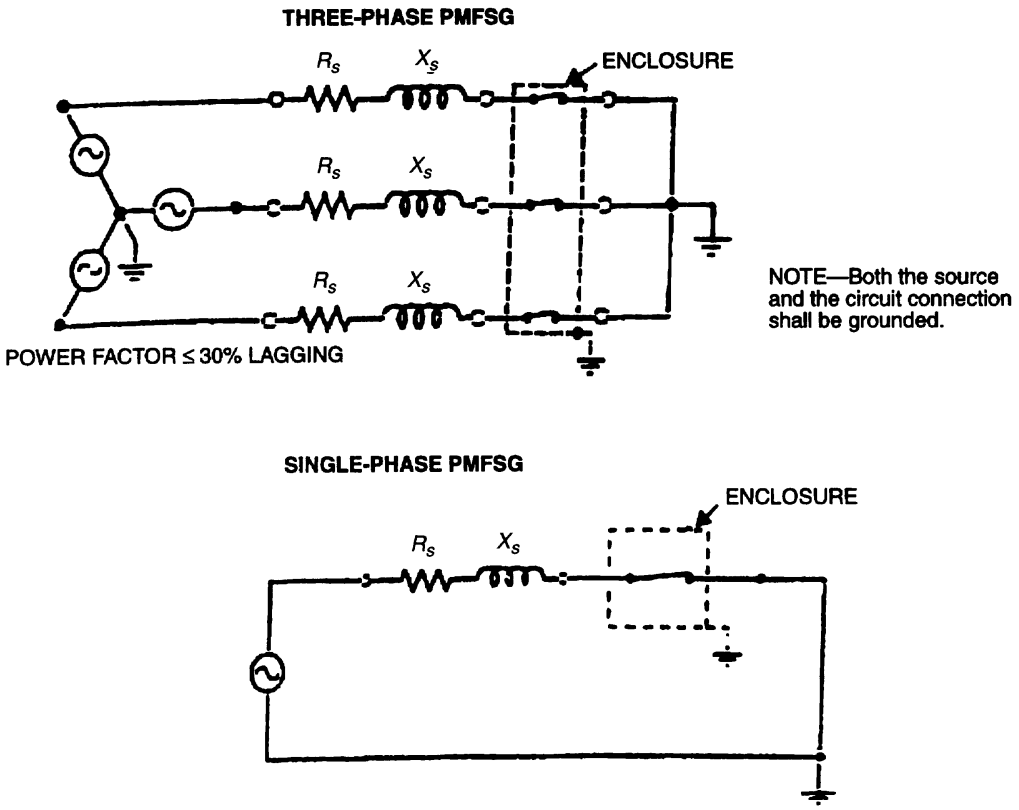

Figure 6—Loop switching test circuit

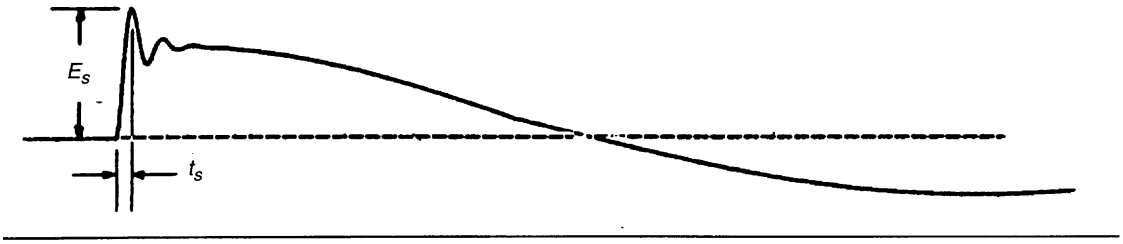

Rated maximum voltage 3-phase PMFSG (kV)	Rated maximum voltage 1-phase PMFSG (kv)	Peak E_s (kV minimum)	Time-to-peak t_s (μs maximum)
15.5	8.9	3.5	220
27	15.5	6.2	300
38	21.9	8.7	330

NOTES
1–Capacitance and damping resistances may be added, as required, to adjust the TRV to the specified value.
2–For conformance testing, the specified value of E_s shall not be exceeded, and the value of time-to-peak shall not be less than specified.

Figure 7—Inherent transient recovery voltage for rated loop switching current test

Copyright © 1998 IEEE. All rights reserved.
and Electronics Engineers, Inc.
IEEE
nitted without license from IHS
Not for Resale

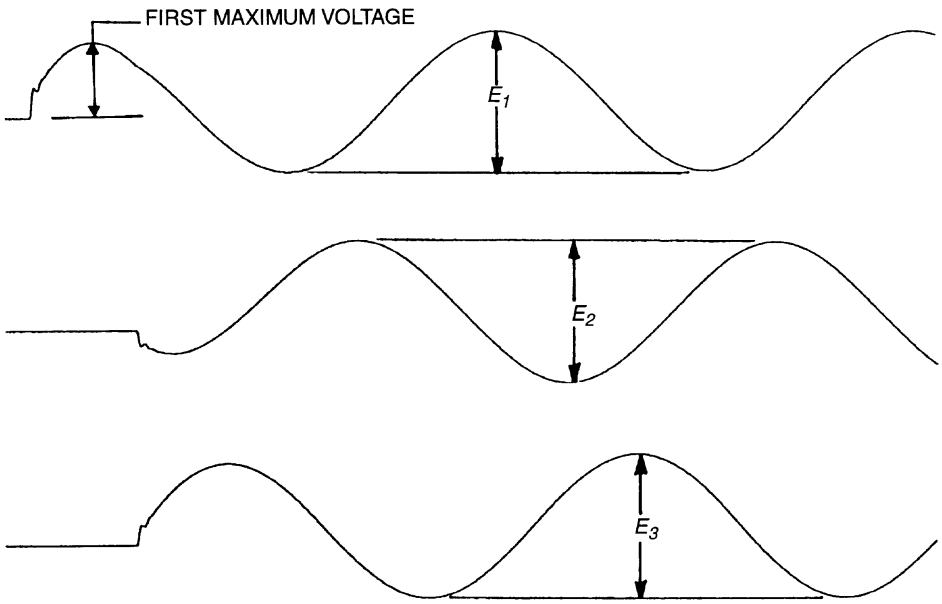

Figure 8—Power-frequency recovery voltage measurement

Closing and opening operations shall be randomly timed. The tests shall be made at the rated maximum voltage of the switch on a three-phase circuit with a power factor between 70% and 90% lagging, using one of the circuits shown in Figure 4, with the transient voltage in Figure 5. Higher or lower power factors may be used, as long as the recovery voltage and the transient and first maximum voltage are more severe than the 70–90% circuit.

Where test facility circuit loading capability is limited, the tests at 5–20% and 40–60% current on a three-phase switch may be performed single-phase at 87% of the rated maximum voltage, but the tests at not less than 100% current shall be made with circuit conditions specified in the paragraph immediately above. When single-phase tests are run at 5–20% and 40–60% current, the test sequence shall be run on each pole of the switch.

Tests on single-phase switches shall be made at the rated maximum voltage of the switch.

6.4.3.4 Loop switching current tests

The switch shall be capable of switching all loop currents up to, and including, its rated loop switching current. (See Table 3 for preferred ratings.) The test circuit shall be as shown in Figure 6, with the transient recovery voltage in Figure 7. The phase-to-phase test voltage, or single-phase test voltage, shall be 20% of the rated maximum voltage of the PMFSG. The switch shall close and interrupt the specified loop current during 10 randomly-timed closing and opening operations. In lieu of these loop switching current tests, 10 additional tests at the rated load switching current may be performed.

6.4.3.5 Cable-charging switching current test

The switch shall be capable of closing and interrupting cable-charging currents up to its rated cable-charging switching current. (See Table 3 for preferred ratings.)

The use of laboratory test circuits for verification of the rated cable-charging switching current is an appropriate simulation of field performance if the switch is restrike-free. Currently available laboratory circuits may be used to demonstrate the interrupting performance for restriking devices, but they may not fully sim-

Copyright © 1998 IEEE. All rights reserved.

and Electronics Engineers, Inc.
IEEE
itted without license from IHS
Not for Resale

ulate field switching performance, especially in producing realistic field overvoltages when restriking occurs. For laboratory tests, the cables may be simulated by artificial circuits with lumped elements consisting of capacitors, reactors, and resistors. (See Figure 9.) Overvoltages caused by restriking in the laboratory may be substantially greater than those experienced in the field.

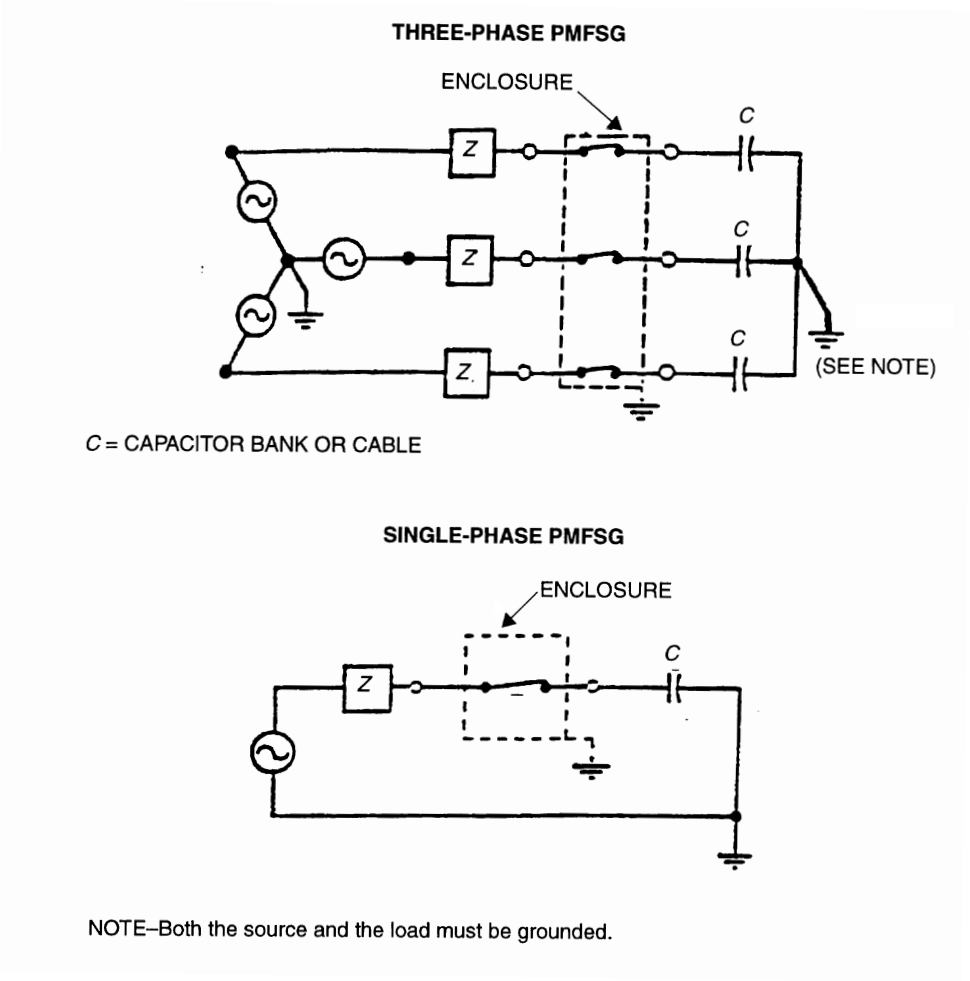

Figure 9—Cable-charging test circuit

6.4.3.5.1 Characteristics of source circuit

The source circuit shall have an impedance such that the prospective short-circuit current does not exceed the rated short-time current of the switch. The characteristics of the source circuit shall be such that the differential capacitance voltage is as small as possible, and is in any case less than 5%.

Capacitance, inductance, and resistance may be added to the source circuit to control the transient recovery voltage frequency and amplitude factor, or to properly simulate inrush currents during closing.

The neutral of the source shall be grounded.

Copyright © 1998 IEEE. All rights reserved.
and Electronics Engineers, Inc.
IEEE
nitted without license from IHS
Not for Resale

6.4.3.5.2 Characteristics of the capacitive load

The characteristics of the switched capacitive load, with all necessary devices such as voltage dividers included, shall be such that the voltage decay on the switched capacitance does not exceed 10% at the end of an interval of 100 µs after final circuit interruption.

NOTE—Since the voltage decay may be significantly influenced by apparatus such as voltage transformers connected to the switched capacitive load, the measurement should be made with suitable voltage dividers.

When capacitors are used to simulate cables, a non-inductive resistance, not exceeding 10% of the capacitive impedance or 50 Ω, may be inserted in series with the capacitors; higher values may unduly influence the recovery voltage. If the peak inrush current is still unacceptably high, then an alternative impedance (e.g., inductance/capacitance) may be used instead of the resistor, provided that the current and voltage conditions at the instant of interrupting, and the recovery voltage, do not differ significantly from the specified values.

The neutral of the load circuit shall be grounded.

6.4.3.5.3 Test requirements

Three-phase tests shall be made at the rated maximum voltage of the PMFSG. Single-phase tests may be conducted on a three-phase switch at 58% of rated maximum voltage of the PMFSG. Single-phase switches shall be tested at the rated maximum voltage of the PMFSG.

The switch shall close and interrupt not less than the rated cable-charging current for 20 randomly timed close and open operations (60 operations, 20 on each pole, if tests are single-pole on a three-pole switch).

6.4.4 Mechanical operation test

The PMFSG shall be subjected to 50 mechanical de-energized close-open operations.

6.4.5 Momentary (peak) current tests

The switch shall withstand three sets of momentary (peak) current tests per 6.3.3.3.

6.4.6 Fault-closing current test

The general conditions in 6.3.3 and 6.3.3.1 are applicable.

6.4.6.1 Test conditions

Three-phase switches shall be tested with three-phase currents, and single-phase PMFSGs shall be tested with a single-phase current. (See Figure 3.) The return path for a single-phase test shall result in the most onerous test conditions.

The test voltage for fault closing shall be greater than or equal to the rated maximum voltage of the PMFSG. It shall be measured across each pole of the device immediately before initiation of the fault current.

For three-phase tests, the average value of the three-phase voltage shall be taken as the test voltage, and no one phase shall differ from the average by more than 10%. The measurements across the poles of the switching device can be converted to equivalent three-phase values by multiplying by 1.73.

--`,-`-`,,`,,`,`,,`---
and Electronics Engineers, Inc.
IEEE
nitted without license from IHS
Copyright © 1998 IEEE. All rights reserved.
Not for Resale

6.4.6.2 Test procedure

The test shall consist of three closing operations, with a prospective asymmetrical (peak) current at least equal to the asymmetrical (peak) associated with the rated fault-closing current. (See Table 3 for the preferred ratings.) It is anticipated that the prospective asymmetrical (peak) current will be obtained on one operation. Due to the pre-arcing before the contacts touch (or fuse arcing characteristics, if applicable), it may not be possible to obtain 100% of specified rated asymmetrical (peak) current. The test current shall be considered satisfactory if the prospective asymmetrical (peak) current is not less than 100% of the asymmetrical (peak) current associated with the rated fault-closing current. It is not required to increase the test setting in order to obtain measured asymmetrical (peak) current values of 100%.

The minimum duration of current for each operation shall be 10 cycles. Sufficient time may be allowed between operations for the contacts to cool.

6.4.6.3 Fault-closing current test with fuses

Switches may be rated for fault-closing with a series fuse that limits the peak fault-closing current or the duration of the current. When the peak fault-closing current with the fuse is less than the peak associated with the rated fault-closing current of a switch without the fuse, then the switch can be assigned a rated fault-closing current equal to the interrupting rating of the fuse without further testing. If a switch is tested for a fault-closing rating with a fuse, then the test shall be the same as 6.4.6.2, except the duration and the peak current may be limited by the fuse, and the momentary current test (6.4.5) can be deleted. The largest fuse with the highest peak let-through current and duration shall be used. Recovery voltage across the fuse shall be maintained for 30 cycles.

6.4.7 Power-frequency withstand test

The switch shall be subject to a power-frequency withstand production test voltage. (See Table 2, column 6.) The portions of 6.3.1 concerning power frequency testing shall apply. (See Figure 2.)

6.4.8 Thermal runaway test

The purpose of this test is to verify that the switch, after being subjected to tests 1 through 6 of Table 7, will operate at a stable temperature while carrying rated continuous current.

Test conditions and procedures shall be the same as for the continuous current test (see 6.3.2). The switch shall have passed this test if the temperature rise stabilizes, as indicated by consecutive readings at 30 min intervals. The limits of observable temperature rises may be exceeded.

NOTE—The thermal runaway test requires that thermocouples and leads be installed at various points of the switch blades, contacts, bus bars, etc. It may be necessary to untank, partially disassemble and reassemble, drill holes for thermocouples, etc., before or after the thermal runaway test. It shall be understood that such work does not constitute maintenance.

6.4.9 Mechanical operation test

The purpose of this test is to verify that the switch can complete a specified number of opening and closing operations, without maintenance or replacement of any parts or components.

6.4.9.1 Test procedure

The mechanical operation test shall consist of 200 de-energized close-open operations.

Copyright © 1998 IEEE. All rights reserved.
and Electronics Engineers, Inc.
IEEE
nitted without license from IHS
Not for Resale

6.4.9.2 Condition after test

The PMFSG shall be mechanically operable, be judged as capable of carrying the rated continuous current without thermal runaway, and pass the power-frequency withstand production test voltage (see Table 2, column 6).

NOTE—The means of showing ability to carry rated current is optional. For example, it may be accomplished by means of a dc resistance test. It is not necessary to repeat the thermal runaway test.

6.5 Testing of switching devices in fused-loadbreak ways

This subclause is intended to cover switching devices operated by opening and closing the fuse.

6.5.1 General

The general comments about preconditioning apply (see 6.4.l.).

6.5.2 Test sequence

The design tests in Table 9 are to be performed on the same pole of the same fused-loadbreak way, and in the sequence listed. However, the individual interrupting tests (row 2) may be performed in any sequence, depending on test facilities, but prior to the fault-closing current test (row 3). The complete sequence of design tests need not be performed on each design modification of a previously certified fused-loadbreak way design. The PMFSG manufacturer shall certify that all requirements are met, based on test history of similar units and conformance with applicable installation methods and practices.

Table 9—Sequence for testing switching devices in fused-loadbreak ways

Test	Reference
1. Dielectric preconditioning, when applicable	6.4.1
2. Switching current tests Load switching current tests Loop switching current tests Cable-charging switching current test	6.5.3 6.5.3.2 6.5.3.3 6.5.3.4
3. Fault-closing current test	6.5.4
4. Power-frequency withstand test (Table 2, Power-frequency withstand production test voltage)	6.5.5
5. Thermal runaway test	6.5.6
6. Mechanical operation test	6.5.7

6.5.3 Switching current tests

The purpose of these tests is to verify that the switching device is capable of closing and interrupting currents within its ratings.

Copyright © 1998 IEEE. All rights reserved.

and Electronics Engineers, Inc.
IEEE
nitted without license from IHS
Not for Resale

6.5.3.1 General

By design, the switching device will be associated with a particular type and model of fuse. Thus, the continuous current, the switching test maximum currents, and the fault-closing current duration and magnitude of the device may correspond to values that accompany the maximum ampere-rated fuse, which can be used in combination with the device. The switching device is operated on an individual pole basis, therefore, single-phase tests shall be performed.

The requirements of 6.4.3.1 and 6.4.3.2 shall apply.

6.5.3.2 Load switching current tests

The switching device shall be capable of closing and interrupting all load currents up to its rated load switching current. (See Table 4 for preferred ratings.) The device shall be tested at currents in accordance with Table 10.

Table 10—Load switching current test for fused-loadbreak ways

No. of operations closing and opening	Rated load switching current (%)
5 5	Not less than 100% 5–20%

Closing and opening operations shall be randomly timed. The test shall be made on a single-phase circuit with lagging power factor between 70% and 90% lagging, using the appropriate test circuit as shown in Figure 4, with the transient recovery voltages in Figure 5. Test voltages shall be the rated maximum voltage of the PMFSG. Test voltage may be equal to 58% of the rated maximum voltage for PMFSG rated Grd-Y. Higher or lower power factors may be used as long as the recovery voltage, and the transient and first peak maximum voltage, are more severe than the 70% to 90% circuit.

6.5.3.3 Loop switching current tests

The loadbreak device shall be capable of closing and interrupting its rated loop switching current. The test circuit shall be as shown in Figure 6, with the transient recovery voltages in Figure 7. The single-phase test voltage shall be 20% of the rated maximum voltage of single-phase PMFSGs, or equal to 20% of 58% of the rated maximum voltage of three-phase PMFSGs. The device shall close and interrupt the specified loop current during five randomly timed operations. Five additional tests at the rated load switching current may be performed in lieu of the loop switching current test.

6.5.3.4 Cable-charging switching current test

The loadbreak device shall be capable of closing and interrupting cable-charging currents up to its rated cable-charging switching current. (See Table 4 for preferred ratings.) Subclauses 6.4.3.5 through 6.4.3.5.2, regarding test circuits, apply.

6.5.3.4.1 Test requirements

The test voltage shall be the rated maximum voltage of single-phase PMFSGs, or 58% of the rated maximum voltage of three-phase PMFSGs.

Copyright © 1998 IEEE. All rights reserved.
and Electronics Engineers, Inc.
IEEE
nitted without license from IHS
Not for Resale

The switch shall close and interrupt not less than the rated cable-charging current for five randomly timed close and open operations.

6.5.4 Fault-closing current test

The purpose of this test is to verify that the switching device is capable of closing into the rated fault-closing current. Subclauses 6.3.3.1 and 6.3.3.2 apply.

6.5.4.1 Test conditions

A maximum ampere-rated fuse shall be in series with the device, or a fuse shorting bar if the mounting is rated with one. Test voltage shall be greater than or equal to the rated maximum voltage of single-phase PMFSGs, or greater than or equal to 58% of the rated maximum voltage of three-phase PMFSGs. Voltage shall be measured across the device immediately before initiation of current. (See Figure 3.)

Other poles in the same way shall be energized to create the proper phase-to-ground and phase-to-phase voltage stress. An alternate voltage source of limited short circuit capacity may be used as long as any breakdown, either phase-to-phase or phase-to-ground, can be detected.

6.5.4.2 Test procedure

The test shall consist of a single closing operation, performed in accordance with the manufacturer's instructions, with a prospective asymmetrical (peak) current at least equal to the asymmetrical (peak) current associated with the rated fault-closing current. The current duration shall be determined by the operating characteristics of the fuse, or it shall be limited to 10 cycles if a fuse shorting bar is used. Due to the pre-arcing before the contacts touch or fuse arcing characteristics, it may not be possible to obtain 100% of asymmetrical (peak) current associated with the rated fault-closing current. The test current will be considered satisfactory if the prospective asymmetrical (peak) current is not less than 100% of the associated asymmetrical (peak) current. It is not required to increase the test setting in order to obtain measured asymmetrical (peak) current values of 100%.

6.5.4.3 Condition of loadbreak device after tests

The device may show visual evidence of having closed into a fault. The rating shall be considered met if the device withstands 10 mechanical operations without cumulative damage, and is capable of carrying its rated continuous current with a stable temperature rise.

6.5.5 Power-frequency withstand test

The fused-loadbreak way shall be subjected to a power-frequency withstand test at the power-frequency production withstand voltage. (See Table 2, column 6.) The fused-loadbreak way shall withstand the specified voltage for 1 min with no disruptive discharge. Only the phase tested for fault-closing needs to be tested for the open position withstand to ground and across the open pole, with the fuse disengaged and removed, if appropriate.

6.5.6 Thermal runaway test

The purpose of this test is to verify that the switching device or fused-loadbreak way, after being subjected to tests 1 through 4 of Table 9, will operate at a stable temperature while carrying rated continuous current.

The test conditions shall be the same as 6.4.8.

Copyright © 1998 IEEE. All rights reserved.

and Electronics Engineers, Inc.
IEEE
nitted without license from IHS
Not for Resale

6.5.7 Mechanical operation test

The purpose of this test is to verify that the loadbreak device can complete a specified number of opening and closing operations without maintenance or replacement of any parts or components.

6.5.7.1 Test procedure

The mechanical operation test shall consist of 10 de-energized close-open operations.

6.5.7.2 Condition after test

The device shall be mechanically operable and capable of carrying continuous current without thermal runaway, and capable of passing the power-frequency production withstand test.

6.6 Testing of fusing devices used in fused ways, fused-switched ways, or fused-loadbreak ways

6.6.1 General

Fusing devices shall be rated and tested per the appropriate IEEE and ANSI standards, e.g., IEEE Std C37.40-1993, IEEE Std C37.41-1994, ANSI C37.46-1981, and ANSI C37.47-1981. It is not the intention to repeat the design testing on fusing devices, but rather to verify that fused ways, fused-switched ways, or fused-loadbreak ways are properly designed to meet the ratings of the PMFSG. In particular, the continuous-current rating and the dielectric withstand capability of the way, with the fuse installed, will be verified. Also, it will be demonstrated that an interrupting operation of the fusing device will perform properly and will not degrade the integrity of the PMFSG.

Fusing devices shall be installed and applied, including rating adjustments that result from mounting in an enclosure, per applicable IEEE standards, e.g., IEEE Std C37.48-1987, and per the manufacturers' recommendations.

6.6.2 Installation requirements

Proper installation is necessary to maintain dielectric withstand, continuous current, and interrupting ratings. Fusing devices shall be installed following the fuse and fuse mounting manufacturer's instructions for clearances, both phase-to-ground and phase-to-phase, including clearance for expulsion by-products and orientation. If these instructions are not followed, additional testing in accordance with appropriate parts of the fusing device design standards shall be performed, e.g., IEEE Std C37.41-1994.

6.6.3 Dielectric test

The ways shall be tested per 6.3.1.

6.6.4 Continuous current test

This test is intended to verify the performance of a way to carry the rated continuous current, and to determine if the PMFSG will affect the continuous-current rating of the fusing device or mounting assigned by the manufacturer and by applicable industry standards. Fusing devices and their mountings may have a reduced continuous-current rating in an enclosure, and the appropriate derating factors, as assigned by the manufacturers and applicable industry standards, should be applied to determine the continuous-current rating in the PMFSG.

--`,,`-`-`,,`,,`,`,,`---

Copyright © 1998 IEEE. All rights reserved.
and Electronics Engineers, Inc.
IEEE
nitted without license from IHS
Not for Resale

This test verifies the rated continuous current of the way by measuring the temperature rise of the bus and interconnections, the dielectric surrounding the fusing device, and, if applicable, contacts specified by the manufacturer. It is not necessary to measure the temperature rise of the fusing device, or its mounting, as long as the installation recommendations of the manufacturer are followed. The PMFSG shall meet the limits of observable temperature rise as specified in 5.4.1. and 5.4.2, and any limits specified by the manufacturers and applicable industry standards when tested at the way's rated continuous current.

The fused way shall be tested per 6.3.2.

6.6.5 Interrupting performance in the PMFSG

For three-phase PMFSGs, one three-phase interrupting test shall be done, and for single-phase PMFSGs, a single interrupting test shall be done at the rated short-circuit current rating of the PMFSG, following the specifications for fuses in enclosures found in IEEE Std C37.41-1994. It is not required to perform a full sequence of interrupting tests. It is not required to perform the interrupting tests in each way containing fuses, but the test is required for each different fuse type or different mounting style.

7. Production tests

Production tests are those tests made to check the quality and uniformity of the workmanship and materials used in the manufacture of pad-mounted fused switchgear. The PMFSG shall meet the production tests described in 7.1 through 7.4. Production tests shall be performed on every completely assembled PMFSG.

7.1 Circuit resistance test

The purpose of this test is to verify that all PMFSG contacts have been properly aligned and current transfer points have been properly assembled.

The dc resistance of the current-carrying circuit, from terminal to terminal of each pole unit in the closed position, shall be measured with a current of at least 10 A flowing. The resistance shall not exceed the limit specified by the manufacturer. Tests through fused ways, or fused-loadbreak ways, can be performed with a solid blade in place of the fuse.

7.2 Power-frequency withstand test

The tests shall be performed in accordance with 6.3.1 at the power-frequency withstand test voltage (see Table 2).

7.3 Leak test

PMFSGs in sealed tanks shall be tested to verify that measurable leaks, which will impair the dielectric integrity of the PMFSGs during their service life, do not exist.

7.4 Operating tests

Each switch shall be operated and tested to verify that

a) The switch position indicators and contacts are in the correct position for both the open and closed positions.
b) The insulating medium quantity indicator, if provided, is functioning properly.

--`,,`-`-`,,`,,`,`,,`---

Copyright © 1998 IEEE. All rights reserved.

and Electronics Engineers, Inc.
IEEE
nitted without license from IHS
Not for Resale

c) The circuit configuration is shown correctly, and the fuses are connected properly.
d) The fuses fit in the holders or mountings.
e) The mechanical interlocks, if required, are in place and operative.

8. In-service dc withstand tests

DC withstand tests for new PMFSGs are specified as a related design test, recognizing that the PMFSG may be subjected to dc voltage when connected to cable. This related dc withstand test is a significant overvoltage, approximately equal to the peak value of the related power-frequency withstand voltage, and it may be near the flashover limit of the insulation or across an isolating gap. All buses or ways not undergoing a test are de-energized and grounded during these design tests. The dc withstand capability of the PMFSG may degrade in service because of aging, contamination, and electrical or mechanical damage.

In-service dc testing of cables is performed to determine their condition and to locate faults. The PMFSG may also be subjected to the dc test voltages if the cables are connected to the gear. The industry standards for cable testing, AEIC CS5-1994 and AEIC CS6-1987, describe such testing. DC testing also includes cable "thumping," i.e., the sudden application of dc voltage with substantial energy for fault locating, which causes transients and voltage doubling at the end of the open cable that can stress the PMFSG at higher voltages. The recommendations by the manufacturers of PMFSG, dc test equipment, surge arresters, and terminators, connectors, and bushing should be followed.

9. Construction requirements

9.1 Grounding provisions

Means shall be provided for each way in each cable compartment to attach a ground conductor to the enclosure using 1/2 in fasteners, and shall be capable of carrying the rated short-time current for the rated short-time current duration.

9.2 Manual operating provisions

The direction of operation of manual operating handles shall be apparent. Handles should turn clockwise to close, counterclockwise to open, or "in" to close and "out" to open. The force required to operate a handle shall be such that one man in a standing position can readily operate it. The force requirements should be similar for operation of loadbreak devices such as fuses with loadbreak attachments and loadbreak separable connectors, and operation of devices that do not have a loadbreak rating but are intended to be operated energized.

Operating handles located within cable terminating compartments shall be operable with standard live line tools. Switch mechanisms with fault-closing ratings shall be designed so that operation does not require any special skills, and the closing and opening speeds of the contacts are independent of the speed at which the handles are operated, except for fused-loadbreak devices.

Operating handles shall be capable of being padlocked in the open and closed positions.

9.3 Switch position indicators

Switches shall be provided with position indicators, or other suitable means that clearly and positively indicate the "open" and "closed" positions of the contacts. The indicators shall be visible from the normal operating position. If colors are used to indicate "open" and "closed," red shall signify closed and green shall

Copyright © 1998 IEEE. All rights reserved.
and Electronics Engineers, Inc.
IEEE
nitted without license from IHS
Not for Resale

signify open, with the words “open” and “closed” in contrasting colors. Corrosion resistant and legible lettering shall be used.

9.4 Insulating medium quantity indicators

When liquid or gas is used as the insulating and/or interrupting medium in a sealed tank, provision shall be made for personnel to readily determine the liquid level or gas pressure with the PMFSG energized. Indicator markings shall show the safe operating levels or pressures over the temperature range specified in 4.1. Quantity-indicating procedures or devices shall not require personnel access to the insulating medium.

9.5 Drain and replacement provisions

When liquid or gas is used as the insulating and/or interrupting medium, provision shall be made to facilitate replacement of the medium with the PMFSG de-energized.

9.6 Sampling and addition provisions

When a liquid is used as the insulating and/or interrupting medium, provisions shall be made to obtain a bottom sample with the PMFSG energized. Provisions shall also be made for adding to the insulating medium, liquid or gas, with the PMFSG energized.

9.7 Enclosure construction

PMFSG enclosures shall meet the enclosure security requirements of ANSI C57.12.28-1996.

The PMFSG shall be constructed so that it can be lifted into place on the mounting pad without disturbing the entrance cables.

Compartment doors shall be large enough to provide adequate working space and shall have a positive means of latching in the open position.

Enclosure coating system shall meet the requirements of ANSI C57.12.28-1996.

A 1 in minimum internal flange shall be provided at the base of the compartments to provide a means to anchor the PMFSG to the pad.

All compartments containing energized parts shall be electrically connected to each other.

9.8 Nameplates

Nameplates of corrosion resistant material shall be provided. Nameplates shall be securely attached to the tank or compartment interiors by corrosion resistant means. All letters, schematics, and numbers shall be legibly stamped, embossed, or engraved on the nameplate. Nameplates are required for the PMFSG and its individual ways.

9.8.1 PMFSG overall nameplates

One or more nameplates for the PMFSG shall contain at least the following:

a) Name of the manufacturer and type designation;
b) Model, style number, and catalog number, if any;

Copyright © 1998 IEEE. All rights reserved.

and Electronics Engineers, Inc.
IEEE
itted without license from IHS
Not for Resale

c) Date of manufacture (month and year, e.g., 1/92);
d) Unique serial number;
e) Rated maximum voltage;
f) Rated frequency;
g) Rated lightning-impulse withstand voltage;
h) Rated power-frequency withstand voltage;
i) Rated short-circuit current;
j) Total weight, including insulating medium;
k) Type and quantity of insulating medium;
l) Three-line terminal oriented schematic diagram using standard symbols.

NOTE—A one-line diagram is acceptable if the location and identification of each terminal are readily apparent.

9.8.2 PMFSG way nameplates

A nameplate shall also designate the ratings of each way as required (see Table 1 for ratings required for specific ways), and shall contain at least the following:

a) Manufacturer and type designation of switch;
b) Manufacturer and type designation of fuse mounting;
c) Rated continuous current;
d) Rated load switching current;
e) Rated loop switching current;
f) Rated cable-charging switching current;
g) Rated short-circuit current (optional);
    1) Rated short-time current and duration;
    2) Rated momentary (peak) current;
    3) Rated fault-closing current (symmetrical and peak);
    4) Rated interrupting current.

10. Shipping requirements

The PMFSG shall be completely assembled. Unless otherwise agreed to by the manufacturer and user, the PMFSG shall include the correct amount of insulating/interrupting medium, considering its temperature.

Instructions and checklists for inspection, installation, and operation of the PMFSG shall be provided.

The PMFSG shall be properly packaged and braced to prevent damage during shipment.

Copyright © 1998 IEEE. All rights reserved.
and Electronics Engineers, Inc.
IEEE
nitted without license from IHS
Not for Resale