Recognized as an
American National Standard (ANSI)

IEEE Std C37.71-2001
(Revision of
IEEE Std C37.71-1984)

IEEE Standard for Three-Phase, Manually Operated Subsurface and Vault Load-Interrupting Switches for Alternating-Current Systems

Sponsor

Switchgear Committee
of the
IEEE Power Engineering Society

Approved 21 March 2001

IEEE-SA Standards Board

Approved 30 March 2001

American National Standards Institute

Abstract: Requirements are given for three-phase group operated subsurface and vault load-interrupting switchgear with maximum ratings of 600 A and 38 kV, and for utilizing separable insulated connectors. Definitions are given, and service conditions and ratings are discussed. Design tests, production tests, and construction requirements are included.
Keywords: subsurface switchgear, switched way, vault switchgear

The Institute of Electrical and Electronics Engineers, Inc.
3 Park Avenue, New York, NY 10016-5997, USA

Copyright © 2001 by the Institute of Electrical and Electronics Engineers, Inc.
All rights reserved. Published 9 July 2001. Printed in the United States of America.

Print: ISBN 0-7381-2840-6 SH94928
PDF: ISBN 0-7381-2841-4 SS94928

No part of this publication may be reproduced in any form, in an electronic retrieval system or otherwise, without the prior written permission of the publisher.

Copyright The Institute of Electrical and Electronics Engineers, Inc.
Provided by IHS under license with IEEE
No reproduction or networking permitted without license from IHS
Not for Resale

IEEE Standards documents are developed within the IEEE Societies and the Standards Coordinating Committees of the IEEE Standards Association (IEEE-SA) Standards Board. The IEEE develops its standards through a consensus development process, approved by the American National Standards Institute, which brings together volunteers representing varied viewpoints and interests to achieve the final product. Volunteers are not necessarily members of the Institute and serve without compensation. While the IEEE administers the process and establishes rules to promote fairness in the consensus development process, the IEEE does not independently evaluate, test, or verify the accuracy of any of the information contained in its standards.

Use of an IEEE Standard is wholly voluntary. The IEEE disclaims liability for any personal injury, property or other damage, of any nature whatsoever, whether special, indirect, consequential, or compensatory, directly or indirectly resulting from the publication, use of, or reliance upon this, or any other IEEE Standard document.

The IEEE does not warrant or represent the accuracy or content of the material contained herein, and expressly disclaims any express or implied warranty, including any implied warranty of merchantability or fitness for a specific purpose, or that the use of the material contained herein is free from patent infringement. IEEE Standards documents are supplied "**AS IS.**"

The existence of an IEEE Standard does not imply that there are no other ways to produce, test, measure, purchase, market, or provide other goods and services related to the scope of the IEEE Standard. Furthermore, the viewpoint expressed at the time a standard is approved and issued is subject to change brought about through developments in the state of the art and comments received from users of the standard. Every IEEE Standard is subjected to review at least every five years for revision or reaffirmation. When a document is more than five years old and has not been reaffirmed, it is reasonable to conclude that its contents, although still of some value, do not wholly reflect the present state of the art. Users are cautioned to check to determine that they have the latest edition of any IEEE Standard.

In publishing and making this document available, the IEEE is not suggesting or rendering professional or other services for, or on behalf of, any person or entity. Nor is the IEEE undertaking to perform any duty owed by any other person or entity to another. Any person utilizing this, and any other IEEE Standards document, should rely upon the advice of a competent professional in determining the exercise of reasonable care in any given circumstances.

Interpretations: Occasionally questions may arise regarding the meaning of portions of standards as they relate to specific applications. When the need for interpretations is brought to the attention of IEEE, the Institute will initiate action to prepare appropriate responses. Since IEEE Standards represent a consensus of concerned interests, it is important to ensure that any interpretation has also received the concurrence of a balance of interests. For this reason, IEEE and the members of its societies and Standards Coordinating Committees are not able to provide an instant response to interpretation requests except in those cases where the matter has previously received formal consideration.

Comments for revision of IEEE Standards are welcome from any interested party, regardless of membership affiliation with IEEE. Suggestions for changes in documents should be in the form of a proposed change of text, together with appropriate supporting comments. Comments on standards and requests for interpretations should be addressed to:

Secretary, IEEE-SA Standards Board
445 Hoes Lane
P.O. Box 1331
Piscataway, NJ 08855-1331
USA

Note: Attention is called to the possibility that implementation of this standard may require use of subject matter covered by patent rights. By publication of this standard, no position is taken with respect to the existence or validity of any patent rights in connection therewith. The IEEE shall not be responsible for identifying patents for which a license may be required by an IEEE standard or for conducting inquiries into the legal validity or scope of those patents that are brought to its attention.

IEEE is the sole entity that may authorize the use of certification marks, trademarks, or other designations to indicate compliance with the materials set forth herein.

Authorization to photocopy portions of any individual standard for internal or personal use is granted by the Institute of Electrical and Electronics Engineers, Inc., provided that the appropriate fee is paid to Copyright Clearance Center. To arrange for payment of licensing fee, please contact Copyright Clearance Center, Customer Service, 222 Rosewood Drive, Danvers, MA 01923 USA; (978) 750-8400. Permission to photocopy portions of any individual standard for educational classroom use can also be obtained through the Copyright Clearance Center.

Copyright The Institute of Electrical and Electronics Engineers, Inc.
Provided by IHS under license with IEEE
No reproduction or networking permitted without license from IHS
Not for Resale

Introduction

(This introduction is not part of IEEE Std C37.71-2001, IEEE Standard for Three-Phase, Manually Operated Subsurface and Vault Load-Interrupting Switches for Alternating-Current Systems.)

This standard is a revision to the original IEEE Std C37.71-1984 for submersible switchgear.

The major revisions to this standard are as follows:

— Inclusion of switchgear used in below-grade enclosures that allow space for personnel access
— Adoption of limits of local temperature and temperature rise values that are consistent with limits in proposed standard C37.73-1998
— Inclusion of inherent transient recovery voltage values for the load-switching tests
— Adoption of the three-by-nine method for impulse withstand testing

The Standards Committee on Power Switchgear, C37, which reviewed and approved this standard had the following membership at the time of approval:

E. Bryon, *Chair*
Andrew K. McCabe, *Executive Vice-Chair of High-Voltage Switchgear Standards*
J. C. Scott, *Executive Vice-Chair Low-Voltage Switchgear Standards*
D. L. Swindler, *Executive Vice-Chair of IEC Activities*
Naeem Ahmad, *IEEE Co-Secretary*
Mervis Calwise, *NEMA Co-Secretary*

Organization Represented	*Name of Representative*
Association of Iron and Steel Engineers	(vacant)
Electric Light and Power Group/Edison Electric Institute (EEI)	D. E. Galicia
	J. L. Koepfinger
	G. J. Martuscello
	Y. Musa
	E. M. Worland
Institute of Electrical and Electronics Engineering (IEEE)	T. A. Burse
	K. Gray
	A. C. Monroe
	R. J. Puckett
	T. E. Royster
	R. D. Garzon
	J. Wood
International Electricity Testing Association (NETA)	A. Peterson
National Electric Contractors Association	D. Harwood
National Electrical Manufacturers Association (NEMA)	E. Bryon
	G. T. Jones
	R. W. Long
	T. Olsen
	G. Sakats
	D. L. Stone
Tennessee Valley Authority	D. N. Reynolds
Testing Lab Group	E. Rosen
	P. Notarian
U.S. Department of Agriculture	H. Bowles
U.S. Department of the Army, Office of the Chief of Engineers	J. A. Gilson
U.S. Department of the Navy, Naval Construction Battalion Center	D. Mills
Western Area Power Administration	(vacant)

Copyright © 2001 IEEE. All rights reserved.

Copyright The Institute of Electrical and Electronics Engineers, Inc.
Provided by IHS under license with IEEE
No reproduction or networking permitted without license from IHS
Not for Resale

At the time this standard was completed, the Working Group on Revisions to C37.71 of the Recloser and Sectionalizer Subcommittee, which prepared this document, included:

Donald Martin, *Chair*

Donald J. Akers	Marcel Fortin	Elbert M. Worland
Raymond L. Capra	David Stone	Janusz Zawadski

The following members of the balloting group voted on this standard. Balloters may have voted for approval, disapproval, or abstention.

Donald J. Akers	Harold L. Hess	Gordon O. Perkins
John G. Angelis	Robert E. Howell	Edward Peters
Charles Ball	Edward Jankowich	James C. Ransom
L. Ronald Beard	Ginger Kamber	David N. Reynolds
Steven A. Boggs	Joseph L. Koepfinger	Hugh C. Ross
Harvey L. Bowles	Paul L. Kolarik	Tim E. Royster
David B. Burns	David G. Kumbera	Lawrence Salberg
Ted Burse	Stephen R. Lambert	Hazairin Samaulah
Eldridge R. Byron	Ward E. Laubach	Larry H. Schmidt
Carlos L. Cabrera-Rueda	John G. Leach	H. Melvin Smith
Raymond L. Capra	George N. Lester	R. Kirkland Smith
James F. Christensen	Albert Livshitz	John G. St. Clair
Stephen P. Conrad	Glenn J. Luzzi	Guy St. Jean
Alexander Dixon	Donald R. Martin	David Swindler
Gary R. Engmann	Lawrence V. McCall	Stan H. Telander
Marcel Fortin	Nigel P. McQuin	Thomas J. Tobin
Ruben D. Garzon	Frank J. Muench	Charles L. Wagner
Mietek T. Glinkowski	Yasin I. Musa	John G. Wood
Keith Gray		Elbert M. Worland
Michael Hattan		Janusz Zawadzki

When the IEEE-SA Standards Board approved this standard on 17 March 2001, it had the following membership:

Donald N. Heirman, *Chair*
James T. Carlo, *Vice Chair*
Judith Gorman, *Secretary*

Chuck Adams	James H. Gurney	Paul J. Menchini
Mark D. Bowman	Raymond Hapemen	Daleep C. Mohla
Clyde R. Camp	Richard J. Holleman	Robert F. Munzner
Richard DeBlasio	Richard H. Hulett	Ronald C. Petersen
Harold E. Epstein	Lowell G. Johnson	Malcolm V. Thaden
H. Landis Floyd	Joseph L. Koepfinger*	Geoffrey O. Thompson
Jay Forster*	Peter H. Lips	Akio Tojo
Howard M. Frazier		Howard L. Wolfman

*Member Emeritus

Also included are the following nonvoting IEEE-SA Standards Board liaisons:

Satish K. Aggarwal, *NRC Representative*
Alan H. Cookson, *NIST Representative*
Donald R. Volzka, *TAB Representative*

Don Messina
IEEE Standards Project Editor

Copyright © 2001 IEEE. All rights reserved.
Copyright The Institute of Electrical and Electronics Engineers, Inc.
Provided by IHS under license with IEEE
No reproduction or networking permitted without license from IHS
Not for Resale

Contents

1. Scope 1

2. References 1

3. Definitions 2

4. Service conditions 2

4.1 Usual service conditions 2

4.2 Unusual service conditions 3

5. Ratings and test requirements 3

5.1 Rating information 3

5.2 Voltage ratings and related test requirements 3

5.3 Current test values 3

6. Design tests 7

6.1 General 7

6.2 Interrupting current tests 8

6.3 Short-time current tests 11

6.4 Insulation (dielectric) tests 13

6.5 Continuous current test 15

6.6 Mechanical operation test 16

6.7 Partial discharge (corona) level test 17

6.8 DC withstand test 17

6.9 Pressure tests 17

7. Production tests 17

7.1 Circuit resistance test 18

7.2 Sixty hertz withstand test 18

7.3 Leak test 18

7.4 Operating assurance tests 18

7.5 Partial discharge (corona) level tests 18

Copyright © 2001 IEEE. All rights reserved.

Copyright The Institute of Electrical and Electronics Engineers, Inc.
Provided by IHS under license with IEEE
No reproduction or networking permitted without license from IHS
Not for Resale

8. Conformance tests 18

8.1 Temperature measurements 19

8.2 Impulse withstand tests 19

8.3 Loop current requirement 19

9. Construction requirements 20

9.1 Grounding provision 20

9.2 Manual operation provisions 20

9.3 Position indicators 20

9.4 Insulating medium quantity indicators 20

9.5 Drain and replacement provisions 21

9.6 Sampling and addition provisions 21

9.7 Tank construction 21

9.8 Terminations 21

9.9 Bushing designation 21

9.10 Nameplate 22

9.11 User identification plate 22

10. Shipping requirements 23

Copyright © 2001 IEEE. All rights reserved.
Copyright The Institute of Electrical and Electronics Engineers, Inc.
Provided by IHS under license with IEEE
No reproduction or networking permitted without license from IHS
Not for Resale

IEEE Standard for Three-Phase, Manually Operated Subsurface and Vault Load-Interrupting Switches for Alternating-Current Systems

1. Scope

This standard applies to three-phase, group operated, 60 Hz, subsurface and vault, load-interrupting switches with maximum ratings of 600 A and 38 kV, and the utilization of separable insulated connectors.

2. References

This standard shall be used in conjunction with the following publications. When the following standards referred to in this document are superseded by a revision, the latest revision shall apply.

ANSI C37.85-1989 (Reaff 1995), Interrupters Used in Power Switchgear X-Radiation Limits for AC High-Voltage Power Vacuum.[1]

ANSI C57.12.26-1993, Pad-Mounted Compartmental-Type, Self-Cooled, Three-Phase Distribution Transformers for Use with Separable Insulated High-Voltage Connectors, High-Voltage, 34 500 Grd/19 920 Volts and Below; 2500 kV and Smaller.

IEEE Std 4-1995, Standard Techniques for High-Voltage Testing.[2]

IEEE Std 386-1995, Separable Insulated Connector Systems for Power Distribution Systems Above 600 V.

IEEE C37.09-1999, Standard Test Procedure for AC High-Voltage Circuit Breakers Rated on a Symmetrical Current Basis.

IEEE C37.100-1992, IEEE Standard Definitions for Power Switchgear.

[1]ANSI publications are available from the Sales Department, American National Standards Institute, 25 West 43rd Street, Fourth Floor, New York, NY 10036, USA (http://www.ansi.org/).
[2]IEEE publications are available from the Institute of Electrical and Electronics Engineers, 445 Hoes Lane, P.O. Box 1331, Piscataway, NJ 08855-1331, USA (http://standards.ieee.org/).

Copyright © 2001 IEEE. All rights reserved.

Copyright The Institute of Electrical and Electronics Engineers, Inc.
Provided by IHS under license with IEEE
No reproduction or networking permitted without license from IHS
Not for Resale

3. Definitions

The definitions of terms contained in this standard, or in other standards referred to in this document, are not intended to embrace all the legitimate meanings of the terms. They are applicable only to the subject treated in this standard. For additional definitions, see IEEE C37.100-1992.[3]

3.1 bus: A three-phase junction common to two or more ways.

3.2 subsurface switch: A submersible switching assembly suitable for application in a below-grade enclosure that does not allow space for personnel access.

3.3 surface operable: A term indicating that the switch and its accessories are operable from above grade.

3.4 switched way: A way connected to the bus through a three-pole, group operated switch.

3.5 tapped way: A way solidly connected to the bus.

3.6 vault switch: A submersible switching assembly suitable for application in a below-grade enclosure that allows space for personnel access.

3.7 way: A three-phase circuit entrance to a switching assembly.

NOTE—For clarification of definitions, see Figure 1.

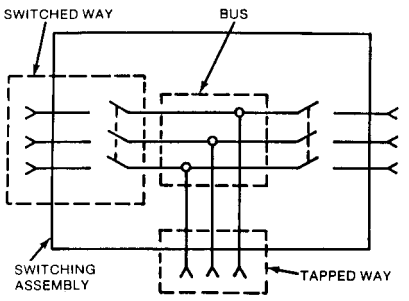

Figure 1—Example using definitions from Clause 3 (three-way switching assembly shown)

4. Service conditions

4.1 Usual service conditions

Switches conforming to this standard as follows, shall be suitable for operation at their nameplate rating:

a) The ambient air temperature within the below-grade enclosure is not above 50 °C nor below −30 °C
b) The altitude does not exceed 1000 m
c) The switch is installed in a below-grade enclosure subject to occasional flooding to a depth not exceeding 3 m

[3]For information on references, see Clause 2.

Copyright © 2001 IEEE. All rights reserved.
Copyright The Institute of Electrical and Electronics Engineers, Inc.
Provided by IHS under license with IEEE
No reproduction or networking permitted without license from IHS
Not for Resale

4.2 Unusual service conditions

4.2.1 Abnormal ambient temperatures

Switches may be applied at higher or lower ambient temperatures than specified, but performance may be affected. Special consideration shall be given to these applications.

4.2.2 Altitudes above 1000 m

This subclause is currently under review. The results will be incorporated in the next revision of this standard.

4.2.3 Other conditions that may affect design and applications

Other existing unusual conditions should be brought to the manufacturer's attention. An unusual condition is considered to be any installation, application, or operation outside the requirements defined in this standard.

5. Ratings and test requirements

5.1 Rating information

The switch ratings shall include the following:

a) Rated frequency
b) Rated maximum voltage
c) Rated impulse withstand voltage
d) Rated continuous and load-interrupting current
e) Rated momentary, making, and 1 s current
f) Rated cable-charging interrupting current
g) Rated magnetizing interrupting current

5.2 Voltage ratings and related test requirements

These ratings and requirements are detailed in Table 1.

5.3 Current test values

For detailed information see Table 2 and Table 3.

5.3.1 Conditions of continuous current rating

Switches shall meet the continuous current rating when operated according to the following conditions:

a) Switches are used under the usual service conditions defined in 4.1.
b) Current ratings shall be based on the total temperature limits of the materials used for such parts. A temperature rise reference is given to permit testing at reduced ambient temperature.
c) Switches installed in nonventilated, below-grade enclosures shall have their ratings based on a 40 °C ambient temperature outside the enclosure, with an ambient temperature rise of 10 °C inside the enclosure.

--`,,`-`-`,,`,,`,`,,`---
Copyright © 2001 IEEE. All rights reserved.

Copyright The Institute of Electrical and Electronics Engineers, Inc.
Provided by IHS under license with IEEE
No reproduction or networking permitted without license from IHS
Not for Resale

Table 1—Voltage ratings and related test requirements

	Rated maximum voltage (kV)	Rated withstand impulse voltage (kV)	Related test requirements			
			60 Hz 1 min Withstand		DC 15 min withstand (kV)	Minimum partial discharge (corona) extinction voltage (kV, rms)
			Design test (kV, rms)	Production test (kV, rms)		
	Column 1	Column 2	Column 3	Column 4	Column 5	Column 6
Line 1	15.5	95	35	34	53	11
Line 2	27	125	60	40	78	19
Line 3	38	150	70	50	103	26

NOTE—When performing field tests involving open contacts in a vacuum, the test should be performed in accordance with ANSI C37.85-1989.

Table 2—Continuous load-interrupting and short-time current test values

	Rated maximum voltage (kV)	Continuous load-interrupting current (A)		Short-time current (A[a], rms)		
				Class 1	Class 2	Class 3
		Main switch	Tap switch	Sym	Sym	Sym
	Column 1	Column 2	Column 3	Column 4	Column 6	Column 8
Line 1	15.5	600	600	12 000	25 000	38 125
Line 2	15.5	600	200	12 000	Not applicable	Not applicable
Line 3	15.5	200	200	10 000	Not applicable	Not applicable
Line 4	27	600	600	12 000	25 000	38 125
Line 5	27	600	200	12 000	Not applicable	Not applicable
Line 6	27	200	200	10 000	Not applicable	Not applicable
Line 7	38	600	600	10 000	20 000	38 125
Line 8	38	600	200	10 000	Not applicable	Not applicable

NOTE—The momentary current (asym rms) and making current (asym rms) test values are equal to 1.55 times the symmetrical short-time current and the corresponding peak asymmetrical values are 2.6 times the symmetrical short-time current, for 60 Hz (X/R = 17). Rated momentary current and making current may be expressed in either asymmetrical rms amperes or peak amperes.

[a]Short-time current ratings may be limited by the capabilities of bushings, connectors, or cables used on production switches. Design tests performed to substantiate the short-time values in Table 3 shall be made on switches with bushings, connectors, and cables of adequate capability.

Table 3—Cable-charging interrupting and magnetizing interrupting current ratings

	Rated maximum voltage (kV)	Continuous and load-interrupting current (A, rms)	Cables-charging interrupting current (A, rms)	Magnetizing interrupting current (A, rms)
	Column 1	Column 2	Column 3	Column 4
Line 1	15.5	600	10	21
Line 2	15.5	200	10	7
Line 3	27	600	25	21
Line 4	27	200	25	7
Line 5	38	600	40	21
Line 6	38	200	40	7

Copyright © 2001 IEEE. All rights reserved.
Copyright The Institute of Electrical and Electronics Engineers, Inc.
Provided by IHS under license with IEEE
No reproduction or networking permitted without license from IHS
Not for Resale

5.3.2 Limits of observable temperature rise

At rated current, the observable hottest spot temperature rise of each of the various parts shall not exceed the values listed in Table 4.

Table 4—Limits of total temperature and temperature rise

Contacts, conducting joints, bushings terminals, and insulation (see NOTES 1, 2, and 3)	Limit of observable hottest spot	
	Temperature rise above air surrounding enclosure (°C)	Total temperature (°C)
a) Contacts (see NOTES 4, 6, and 7)		
Bare copper and bare copper alloy		
in air	20	60
in SF_6	95	135
in oil	25	65
Silver-coated or nickel-coated		
in air	50	90
in SF_6	95	135
in oil	35	75
Tin-coated		
in air	40	80
in SF_6	50	90
in oil	35	75
b) Connections, bolted or the equivalent (see NOTES 5, 6, and 7)		
Bare copper, bare copper alloy, or bare aluminium alloy		
in air	35	75
in SF_6	95	135
in oil	45	85
Silver-coated, nickel-coated, tin-coated, or the equivalent		
in air	70	110
in SF_6	95	135
in oil	45	85
c) Terminals (see NOTE 8)		
Separable connectors: 200 A and 600 A bushings	35	75
Bolted connections		
unplated	35	75
silver-coated, nickel-coated, tin-coated, or the equivalent	50	90
d) Insulation (see NOTE 9)		
Oil 2.5 cm below surface (top oil)	35	75
Class 90 °C insulation	35	75

Copyright © 2001 IEEE. All rights reserved.

Copyright The Institute of Electrical and Electronics Engineers, Inc.
Provided by IHS under license with IEEE
No reproduction or networking permitted without license from IHS
Not for Resale

Table 4—Limits of total temperature and temperature rise (continued)

Contacts, conducting joints, bushings terminals, and insulation (see NOTES 1, 2, and 3)	Limit of observable hottest spot	
	Temperature rise above air surrounding enclosure (°C)	Total temperature (°C)
Class 105 °C insulation	50	90
Class 130 °C insulation	75	115
Class 155 °C insulation	100	140
Class 180 °C insulation	125	165
Class 220 °C insulation	165	205

NOTES

1—The same part may belong to several categories as listed in the table. In this case, the total temperature limits and temperature-rise limits are the lowest among the relevant categories.

2—For vacuum switching devices, the total temperature limits and temperature-rise limits are not applicable for parts in vacuum. The remaining parts shall not exceed the limits given in the table.

3—Total temperature limits may be restricted by the temperature of surrounding insulating materials not directly in contact with current-carrying parts.

4—When contact parts have different coatings, the total temperature limits and temperature-rise limits shall be those of the part having the lower limits in the table.

5—When connection parts have different coatings, the total temperature limits and temperature-rise limits shall be those of the part having the lower limits in the table.

6—When materials other than those given in the table are used, their properties hall be considered in order to determine the total temperature limits and temperature-rise limits.

7—Contacts or connections in other than air, oil, or SF_6 may be operated at other temperatures, providing it can be shown by experience or tests that accelerated deterioration will not occur.

8—The total temperature of terminals may be limited by the temperature limits of insulated cable, connectors, or terminators connected to the terminals. The temperature limits of terminals should not exceed 75°C for high molecular weight polyethylene (HMWPE) insulated cable.

9—For the purpose of establishing temperature limits, insulating material shall be classified as follows:

Class 90 °C insulation. Materials or combinations of materials, such as cotton, silk, and paper, without impregnation. Other materials or combinations of materials may be included in this class if, by experience or accepted tests, they can be shown to be capable of operation at 90 °C.

Class 105 °C insulation. Materials or combinations of materials, such as cotton, silk, and paper, when suitably impregnated or coated, or when immersed in a dielectric liquid such as oil. Other materials or combinations of materials may be included in this class if, by experience or accepted tests, they can be shown to be capable of operation at 105 °C.

Class 130 °C insulation. Materials or combinations of materials, such as mica and glass fiber, with suitable bonding substances. Other materials or combinations of materials, not necessarily inorganic, may be included in this class if, by experience or accepted tests, they can be shown to be capable of operation at 130 °C.

Class 155 °C insulation. Materials or combinations of materials, such as mica and glass fiber, with suitable bonding substances. Other materials or combinations of materials, not necessarily inorganic, may be included in this class if, by experience or accepted tests, they can be shown to be capable of operation at 155 °C.

Class 180 °C insulation. Materials or combinations of materials, such as silicone elastomer, mica, and glass fiber, with suitable bonding substances, such as appropriated silicone resins. Other materials or combinations of materials may be included in the class if, by experience or accepted tests, they can be shown to be capable of operation at 180 °C.

Class 220 °C insulation. Materials or combinations of materials that, by experience or accepted tests, can be shown to be capable of operation at 220 °C.

Over 220 °C insulation. Insulation that consists entirely of mica, porcelain, glass, quartz, and similar inorganic materials. Other materials or combinations of materials may be included in this class if, by experience or accepted tests, they can be shown to be capable of operation at temperatures over 220 °C.

a) Insulation is considered to be "impregnated" when a suitable substance provides a bond between components of the structure, and also a degree of filling or surface coverage sufficient to give adequate performance under the extremes of temperature, surface contamination (moisture, dirt, etc.), and mechanical stress expected in service. The impregnant shall not flow or deteriorate enough at operating temperature so as to seriously affect performance in service.
b) The electrical and mechanical properties of the insulation shall not be impaired by the prolonged application of the limiting insulation temperature permitted for the insulation class. The word "impaired" is used here in the sense of

Copyright © 2001 IEEE. All rights reserved.
Copyright The Institute of Electrical and Electronics Engineers, Inc.
Provided by IHS under license with IEEE
No reproduction or networking permitted without license from IHS
Not for Resale

causing any change that could disqualify the insulating material from continuously performing its intended function, whether it is creepage spacing, mechanical support, or dielectric barrier action.

c) In the preceding definitions, the words "accepted tests" are intended to refer to recognized test procedures established for thermal evaluation of materials by themselves or in simple combinations. Experience or test data used in classifying insulating materials is distinct from the experience or test data derived for the use of materials in complete insulation systems. The thermal endurance of complete systems may be determined by applicable technical committees. A material that is classified as suitable for a given temperature in the preceding definitions may be found suitable for a different temperature, either higher or lower, by an insulation system test procedure. For example, it has been found that some materials suitable for operation at one temperature in air may be suitable for a higher temperature when used in a system operated in an inert gas atmosphere.

d) It is important to recognize that other characteristics, in addition to thermal endurance, such as mechanical strength and moisture resistance, are required in varying degrees in different applications for the successful use of insulating materials.

6. Design tests

Design tests, sometimes called type tests, are those tests performed by the manufacturer to determine the adequacy of the design of a particular type, style, or model of equipment, or its component parts, for meeting its assigned ratings, and for operating satisfactorily under normal service conditions or under special conditions, if specified. These tests may be used to demonstrate compliance with applicable standards of the industry.

Design tests are performed on representative apparatus or prototypes to verify the validity of design analysis and calculation methods, and to substantiate the ratings assigned to all other apparatus of basically the same design. These tests are not intended to be performed on every design or to be used as part of normal production. The applicable portion of these design tests may also be used to evaluate modifications of a previous design to assure that performance has not been adversely affected. Test data from previous similar designs may be used for current designs, where appropriate. Once made, tests need not be repeated unless the design is changed so as to modify performance.

6.1 General

6.1.1 Condition of switch to be tested

The switch shall be new or in good condition.

6.1.2 Mounting of specimen

The switch shall be mounted in the usual service position for which it is designed.

6.1.3 Frequency

The frequency of the supply voltage shall be 60 Hz + 0–20%.

6.1.4 Single-phase testing

Where single-phase testing is permitted (see 6.2.1 and 6.2.2), all such tests shall be performed on the same pole, with the other poles grounded.

6.1.5 Test sequence

The following design tests shall be performed on the same switched way and in the sequence listed. However, the individual interrupting tests in item a) may be performed in any sequence, depending upon test facilities, but prior to the momentary current test in item b).

--`,,`-`-`,,`,,`,`,,`---
Copyright © 2001 IEEE. All rights reserved.

Copyright The Institute of Electrical and Electronics Engineers, Inc.
Provided by IHS under license with IEEE
No reproduction or networking permitted without license from IHS
Not for Resale

Maintenance that could be expected to enhance subsequent design test results during the sequential testing shall not be performed on the switch during this sequence of tests. The insulating medium shall not be replaced, filtered, or reconditioned prior to the completion of test in item d). Equipment repairs may be made where it can be demonstrated that such repairs would not influence the cumulative conditioning effects of previous tests in the design sequence.

a) Interrupting current tests (see 6.2)
    1) Load switching tests (see 6.2.1)
    2) Magnetizing current tests (see 6.2.2)
    3) Cable charging current tests (see 6.2.3)
b) Momentary current test (see 6.3.1)
c) Making current test (see 6.3.2)
d) Sixty hertz withstand tests (see 6.4.5)
    refer to Table 1, column 4
e) Thermal runaway test (see 6.5.5)
f) Mechanical operation test (see 6.6)

6.1.6 Other tests

The following design tests shall also be made, not necessarily on the same switch and in any sequence:

a) Sixty hertz withstand test (see 6.4.5)
    refer to Table 1, column 3
b) Impulse withstand tests (see 6.4.4)
c) Continuous current test (see 6.5)
d) Partial discharge (corona) level test (see 6.7)
e) DC withstand test (see 6.8)
f) One-second current test (see 6.3.3)
g) Pressure tests (see 6.9)

6.2 Interrupting current tests

The purpose of these tests is to verify that the switch is capable of closing and interrupting currents within its ratings.

6.2.1 Load-switching tests

The switch shall be capable of switching all load currents, up to and including the rated continuous currents shown in Table 2, column 2 and column 3.

The switch shall be tested at currents in accordance with Table 5.

Table 5—Load switching

Number of operations		Test current (percentage of rated continuous current)
Closing	Opening	
20	20	Not less than 100
30	30	40–60
10	10	5–20

Copyright © 2001 IEEE. All rights reserved.
Copyright The Institute of Electrical and Electronics Engineers, Inc.
Provided by IHS under license with IEEE
No reproduction or networking permitted without license from IHS
Not for Resale

Closing and opening operations shall be randomly timed. The tests shall be made at the rated maximum voltage of the switch on a three-phase circuit with a power factor between 70% and 80% lagging, using one of the circuits shown in Figure 2a with the transient voltage in Figure 2b. Higher or lower power factors may be used as long as the transient voltage peak and first voltage maximum are more severe than the 70–80% circuit.

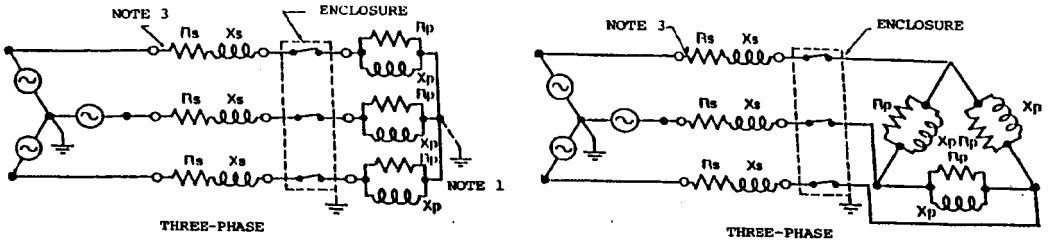

$$Z_s = 10\text{–}20\% \text{ of } \frac{\text{Rated maximum voltage}}{\sqrt{3}\ \text{Rated switching current}}$$

Circuit power factor 70–80% lagging.

Grounded wye is the preferred source connection.

NOTE 1—Either the neutral of the load *or* the source may be grounded, but *not* both.

NOTE 2—Once calculated for a specific 100% load switching testing, Z_s, remains the same for the reduced current interrupting tests.

NOTE 3—R'_s and X_s, whether located as shown, or between the switch and load, or separated for convenience, will be considered Z_s.

NOTE 4—Once calculated for a specific 100% load switching testing, TRV components remain the same for the reduced current interrupting tests.

Figure 2a—Load-switching test circuits

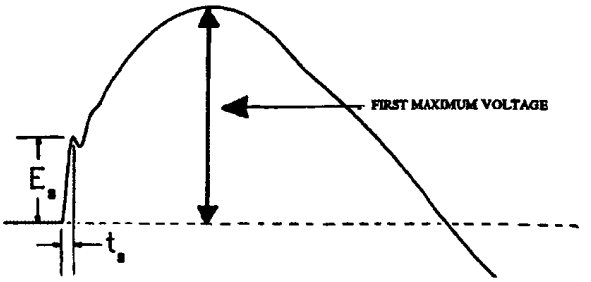

	RATED MAXIMUM VOLTAGE (kV)	PEAK E_s (kV minimum)	TIME-TO-PEAK t_s (microsec maximum)
	15.5	4.0	180
3Ø	27	7.6	290
	38	13	424

NOTE 1—TRV is for the first pole to open for three-phase switch.
NOTE 2—Capacitance and damping resistances may be added as required to adjust the TRV to the specified values.
NOTE 3—For conformance testing, the specified value of E_s shall not be exceeded, and the value of the time-to-peak shall not be less than specified.

Figure 2b—Inherent transient recovery voltage for 100% load switching current tests

Copyright © 2001 IEEE. All rights reserved.

Copyright The Institute of Electrical and Electronics Engineers, Inc.
Provided by IHS under license with IEEE
No reproduction or networking permitted without license from IHS
Not for Resale

Where test facility circuit loading capability is limited, the tests at 5–20% and 40–60% current on a three-phase switch may be performed single-phase at 87% of the total maximum voltage; however, the tests at not less than 100% current shall be made with circuit conditions specified in the preceding paragraph.

When single-phase tests are run at 5–20% and 40–60% current, the test sequence shall be run on each phase of the switch.

6.2.2 Magnetizing current tests

The switch shall be capable of closing and interrupting magnetizing current. The test circuit (see Figure 3) shall consist of an actual transformer or be composed of resistance connected in parallel with iron core reactance of such magnitude as to produce the required test current shown in Table 3, column 4 (20%) at rated maximum voltage at a power factor between 5% and 10% lagging. The test may be conducted single phase at 87% of rated maximum voltage.

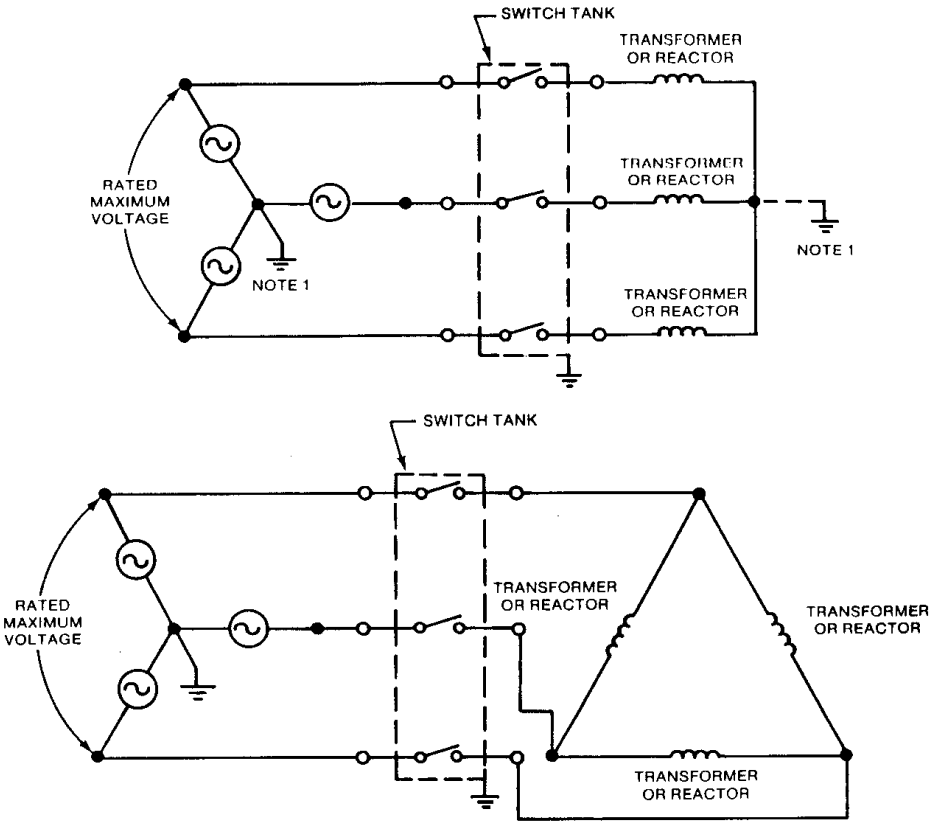

NOTE 1—Either the neutral of the load *or* the source is to be grounded but *not* both.

Figure 3—Magnetizing current test circuits

The switch shall close and interrupt the specified current during a minimum of 10 randomly timed operations (30 randomly timed operations if tests are single phase, 10 operations on each pole). Sufficient time shall be allowed after closing to permit transients to subside.

Current measurement shall be made after transients have subsided using an rms responding meter.

Copyright © 2001 IEEE. All rights reserved.
Copyright The Institute of Electrical and Electronics Engineers, Inc.
Provided by IHS under license with IEEE
No reproduction or networking permitted without license from IHS
Not for Resale

6.2.3 Cable-charging current tests

The switches shall be capable of closing and interrupting the rated cable-charging current shown in Table 3, column 3. The test circuit shall be as shown in Figure 4. The neutral of the source and the neutral of the connected capacitor bank are to be grounded.

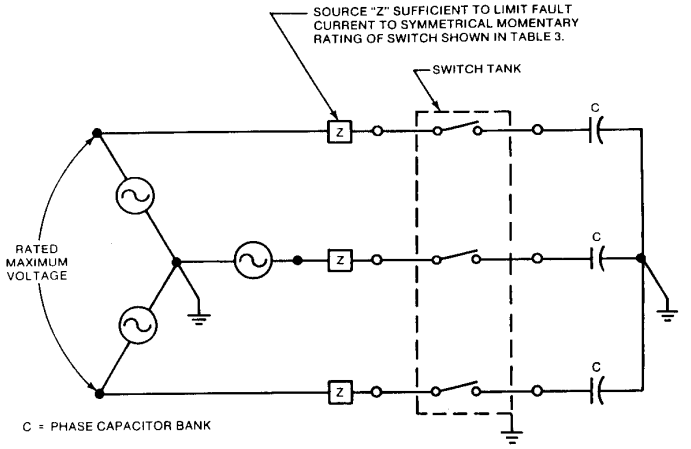

Figure 4—Cable charging current test circuit

Tests shall be made at the rated maximum voltage of the switch.

A single-phase test may be conducted on a three-phase switch at 58% of rated maximum voltage.

The switch shall close and interrupt not less than the specified steady-state cable-charging current during a minimum of 20 randomly timed operations (60 randomly timed operations, 20 on each pole, if tests are single phase on a three-phase switch). The maximum transient overvoltage produced during these tests shall not exceed 2.5 times the peak line-to-ground voltage.

6.3 Short-time current tests

The purpose of these tests is to verify that the switch is capable of withstanding momentary, making, and 1 s currents (Table 2) to which the equipment may be exposed in partially overhead and underground circuits.

6.3.1 Momentary current test

6.3.1.1 Test conditions

The switch shall have been previously subjected to the interrupting tests (see 6.2), and an additional 50 mechanical deenergized, close–open operations. Conductors used in this test shall be connected at right angles to the switch bushing.

Momentary current tests may be made at any voltage (above 50 V) up to rated voltage of the switch. Three-phase switches shall be tested on a three-phase circuit (see Figure 5).

--`,,`-`-`,,`,,`,`,,`---
Copyright © 2001 IEEE. All rights reserved.

Copyright The Institute of Electrical and Electronics Engineers, Inc.
Provided by IHS under license with IEEE
No reproduction or networking permitted without license from IHS
Not for Resale

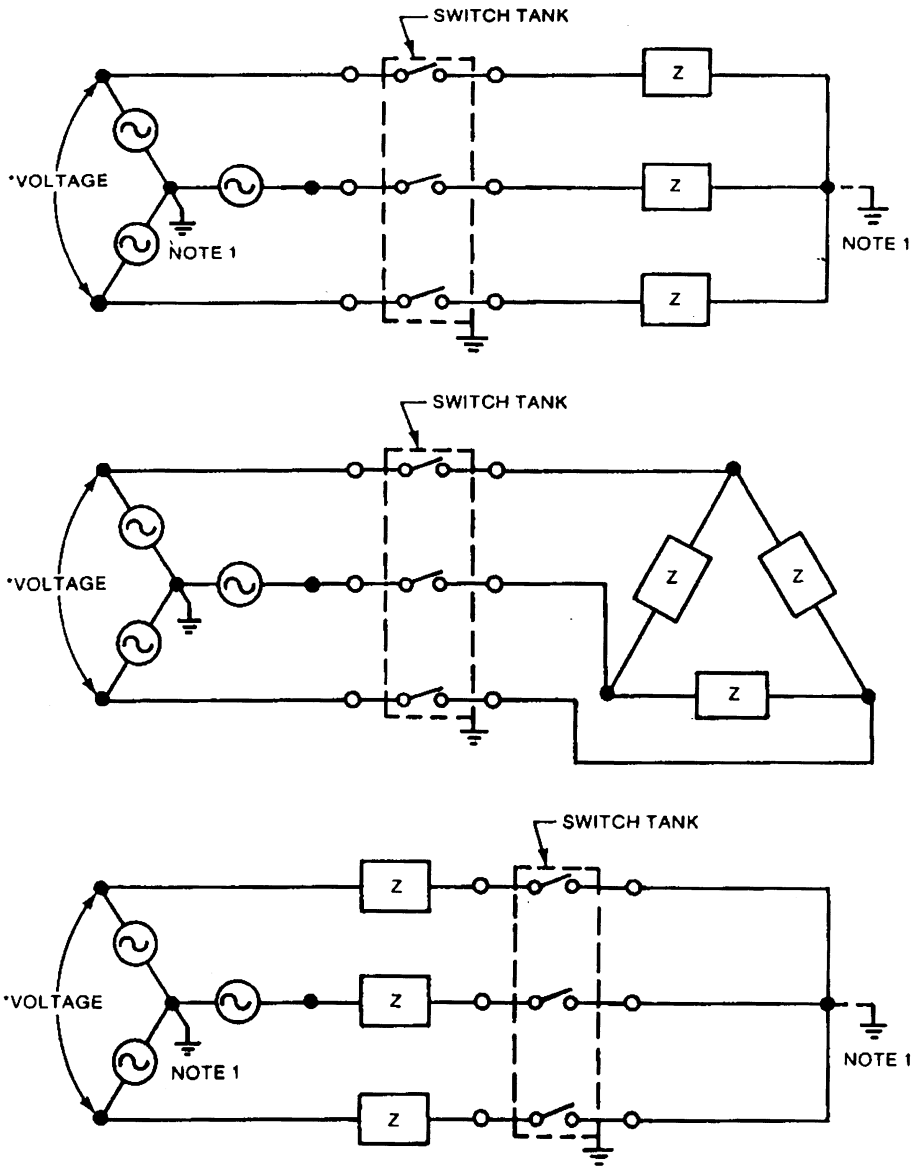

$\frac{X}{R}$ = 15 or greater

NOTE 1—Either the neutral of the load *or* the source is to be grounded, but *not* both.

*Refer to 5.3 for voltage limitations.

Figure 5—Short-time current test circuits

6.3.1.2 Test procedure

The switch shall withstand three sets of momentary tests. Each set shall include a sequence of three periods of current flow, with 10 s ± 1 s between each of the three periods, to simulate typical reclosing operations. The duration of each period shall not be less than 10 cycles.

The asymmetrical (peak) current of the first major loop of one phase of any period of current flow of each set shall not be less than the rated momentary (peak) current. (See Table 2 for test values.) The magnitude shall be measured in accordance with Clause 7 of IEEE C37.09-1999.

Copyright © 2001 IEEE. All rights reserved.
Copyright The Institute of Electrical and Electronics Engineers, Inc.
Provided by IHS under license with IEEE
No reproduction or networking permitted without license from IHS
Not for Resale

6.3.2 Making current test

6.3.2.1 Test conditions

The making current test shall be conducted following the momentary current test (see 6.3.1). Conductors used in this test shall be solidly connected at right angles to the switch bushing.

This test shall be made at rated maximum voltage of the switch. Three-phase switches shall be tested on a three-phase circuit (see Figure 5).

6.3.2.2 Test procedure

The test shall consist of three closing operations at the symmetrical short-time current value listed in Table 2. At least one of the closing operations shall have the peak asymmetrical value of the first major current loop equal to the peak asymmetrical value specified (see Table 2).

The magnitude shall be measured in accordance with IEEE C37.09-1999. The minimum duration of current for each operation shall be 10 cycles. Sufficient time may be allowed between operations for the contacts to cool.

6.3.3 One-second current test

6.3.3.1 Test conditions

The switch should not have been previously subjected to any interrupting tests. Bushings may be changed for this test to accommodate conductors of sufficient thermal capacity. This test may be made at any voltage up to rated voltage of the switch.

Three-phase switches may be tested on a three-phase circuit (see Figure 5), or may be tested single phase by tying two adjacent phases together in series.

6.3.3.2 Test procedure

The switch shall be subjected to a single current-carrying test of 1 s minimum duration at the symmetrical short-time current value shown in Table 2. For practical purposes, this current shall be taken as the integrated heating equivalent of the 1 s rating; the maximum application period shall not exceed 2 s.

6.3.3.3 Condition of switch after test

There shall be no visible damage to the device after the tests have been completed. However, the tests may result in some visual evidence of the device having passed current, such as slight contact markings.

When slight contact marking occurs, *or when visual inspection is not feasible*, rating shall be considered met when the device will withstand repeated mechanical operations without cumulative damage, and is capable of carrying its rated continuous current without exceeding the temperature limits specified for the device being tested.

6.4 Insulation (dielectric) tests

Insulation withstand tests are made to determine the ability of the insulating materials and spacing to withstand specified overvoltages for a specified time without flashover or puncture.

--`,,`-`-`,,`,,`,`,,`---
Copyright © 2001 IEEE. All rights reserved.

Copyright The Institute of Electrical and Electronics Engineers, Inc.
Provided by IHS under license with IEEE
No reproduction or networking permitted without license from IHS Not for Resale

6.4.1 Points of application of test voltage

The insulation withstand test voltage shall be applied:

a) Across open contacts
b) From terminals to ground [switch(es) open and closed]
c) Between phases [switch(es) open and closed]

During the tests, the tank case and all unenergized terminals shall be grounded.

6.4.2 Temperature

Dielectric tests shall be made at the temperature prevailing in the test area.

6.4.3 Dielectric test procedures and voltage measurements

The dielectric test procedures and the methods of voltage measurements shall be in accordance with IEEE Std 4-1995.

If terminations (see 9.8) capable of meeting the specified dielectric test voltages are not available, other terminations (bushings and connectors or both) may be substituted for the purpose of performing this test.

6.4.4 Impulse withstand tests

Switches shall withstand a full wave 1.2×50 μs voltage impulse with crest values as given in Table 1, column 2, with a virtual front time based on the rated full-wave impulse voltage ($\leq$ 1.2 μs) with a crest voltage equal to or exceeding the rated impulse withstand voltage, and with a time to the 50% value of the crest voltage $\geq$ 50 μs. At least three positive and three negative impulses shall be applied to the test specimen. If a flashover occurs on only one test during any group of three consecutive tests, nine more tests shall be made. If the switch withstands all nine of the second group of tests, the flashover in the first group shall be considered a random flashover, and the switch shall be considered as having passed the test. If an additional flashover occurs, the switch shall be considered to have failed the test.

6.4.5 Sixty hertz withstand tests

6.4.5.1 Test procedure

Low-frequency withstand test voltages shall be applied that have a crest value equal to 1.414 times the rated low-frequency withstand test shown in Table 1, column 3 and column 4. The wave shape shall be as close to a sine wave as practicable. The test voltage shall be raised to the specified value within 30 s. The switch shall withstand the specified voltage for 1 min with no disruptive discharge.

6.4.5.2 Test for rated 60 Hz withstand

Rated 60 Hz withstand tests (see 6.1.6) shall be performed at the value from Table 1, column 3. Failure of a bushing will not invalidate this test if the bushing can be replaced and the test passed.

Copyright © 2001 IEEE. All rights reserved.
Copyright The Institute of Electrical and Electronics Engineers, Inc.
Provided by IHS under license with IEEE
No reproduction or networking permitted without license from IHS
Not for Resale

The test can also be performed with enhanced insulation on bushings, since the intent is to prove insulation of switch internal parts rather than to demonstrate that the bushings can meet the switch rating.[4]

6.4.5.3 Test for 60 Hz withstand following making current test

Following the making current test (see 6.3.2) the switch shall be subjected to a 60 Hz withstand test (see 6.1.5) at the value from Table 1, column 4. This is the same value as used for production tests.

6.5 Continuous current test

The switch shall meet the conditions of continuous current rating and limits of observable temperature rise as specified in 5.3.1 and 5.3.2, respectively, when tested as outlined in 6.1 and as follows.

6.5.1 Test conditions

The switch shall be installed in a closed room, substantially free from air currents other than those generated by heat from the switch being tested.

6.5.2 Connections

The switch shall have terminations in accordance with IEEE Std 386-1995, and have conductors at least 1.2 m long. The conductors shall be 1000 kcmil aluminum, or equivalent, for 600 A terminations; and AWG #4/0 aluminum, or equivalent, for 200 A terminations.

6.5.3 Test procedure

The rated continuous current of a switch at rated frequency shall be applied continuously to all three phases until the temperature becomes stable. The temperature shall be considered stable when three consecutive values of temperature rise taken at 30 min intervals at all points where readings are being taken show a maximum variation of 1°. All temperature determinations shall be made as follows.

6.5.3.1 Method of temperature determination

This method consists of the determination of the temperature by thermocouples, or by mercury, spirit, or resistance thermometers.

6.5.3.2 Value of the ambient temperature

The value of the ambient temperature during these tests shall be taken as that of the surrounding air and shall not be less than 10 °C or more than 40 °C.

[4]At the time of writing this standard, separable connectors were not available with ratings corresponding to the desired switch ratings.

Copyright © 2001 IEEE. All rights reserved.

Copyright The Institute of Electrical and Electronics Engineers, Inc.
Provided by IHS under license with IEEE
No reproduction or networking permitted without license from IHS Not for Resale

6.5.4 Determination of the ambient temperature

6.5.4.1 Placing of thermocouples (thermometers)

The ambient temperature shall be determined by means of a thermocouple placed 30 cm above and 30 cm to one side of the switch.

6.5.4.2 Use of oil cup

In order to avoid errors due to the time lag between the temperature of the apparatus and the variations in the ambient temperature, all reasonable precautions shall be taken to reduce these variations and the errors arising from them. Thus, when the ambient temperature is subject to such variations that error in taking the temperature rise might result, the thermocouple for determining the ambient temperature should be immersed in a suitable liquid (such as oil), in a suitable, heavy cup. A convenient form for such an oil cup consists of a metal cylinder with a hole drilled partially through it. This hole is filled with oil and the thermocouple is placed therein with its bulb immersed. The response of the thermocouple to various rates of temperature change will depend largely upon the size, kind of material, and mass of the containing cup, and may be further regulated by adjusting the amount of oil in the cup. The larger the apparatus under test, the larger should be the metal cylinder employed as an oil cup in the determination of the cooling air temperature. The smallest size of oil cup employed in any case shall be a metal cylinder 2.5 cm in diameter and 5 cm high.

6.5.5 Thermal runaway test

The purpose of this test is to verify that the switch, after being subjected to Tests a, b, c, and d of 6.1.5, will operate at a stable temperature while carrying rated continuous current.

Test conditions and procedures shall be the same as for the continuous current test (see 6.5). The switch shall have passed this test if the temperature stabilizes as indicated by three consecutive readings at 30 min intervals. The limits of observable temperature rises may be exceeded.

NOTE—The thermal runaway test requires that thermocouples and leads be installed at various points on the switch blades, contacts, bus bars, and similar points. It may be necessary to untank, partially disassemble and reassemble, drill holes for thermocouples, and perform other procedures, before or after the thermal runaway test. It shall be understood that such work does not constitute maintenance. For switch construction that makes disassembly difficult (welded construction, etc.), it is sufficient to measure the temperature stability of accessible connections and compare these with like points from the design test.

6.6 Mechanical operation test

The purpose of this test is to verify that the switch can complete a specified number of opening and closing operations without maintenance or replacement of any parts or components, and is to be run following the thermal runaway tests (see 6.5.5).

6.6.1 Test procedure

The mechanical operation test shall consist of 200 deenergized (no load) opening and closing operations.

6.6.2 Condition after test

The switch shall be mechanically operable and capable of carrying the rated continuous current without thermal runaway, and capable of passing the 60 Hz withstand voltage test, see Table 1, column 4.

Copyright © 2001 IEEE. All rights reserved.
Copyright The Institute of Electrical and Electronics Engineers, Inc.
Provided by IHS under license with IEEE
No reproduction or networking permitted without license from IHS
Not for Resale

NOTE—The means of showing ability to carry current is optional. For example, it may be accomplished by means of a dc resistance test. It is not necessary to repeat the thermal runaway test.

6.7 Partial discharge (corona) level test

(This subclause is presently being studied by committees and will be published when available.)

6.8 DC withstand test

The purpose of this test is to verify that the switch is capable of withstanding the dc lost test voltages that may be applied to installed cable systems.

6.8.1 Test procedure

The rated dc 15 min withstand voltage of negative polarity shall be applied to the switches. Points of application of voltage shall be as specified in 6.4.1. The voltage shall be raised gradually to the specified test voltage, as shown in Table 1, column 5, and maintained at that voltage for 15 min.

NOTE—Field tests of switches or associated cables shall be performed only when all ways of the switch and cables are completely isolated from all system voltages.

6.9 Pressure tests

The purpose of these tests is to demonstrate that the switch will withstand pressure and remain operable when subjected to a positive pressure resulting from the operation of the switch (e.g., temperature rise, load interrupting, and fault closing), and negative pressure resulting from flooding of vaults and enclosures where they may be installed.

6.9.1 External pressure test

For this test, the internal pressure shall be reduced 35 kPa below the minimum operating pressure of the switch. Tanks shall not deform sufficiently to impair operation of the switch. The pressure 35 kPa corresponds to approximately a 3 m head of water above the switch top.

6.9.2 Internal pressure test

For this test, the switch shall be pressurized to the maximum operating pressure conditions expected during maximum temperature, altitude, etc. as specified herein. The tank shall not deform sufficiently to impair operation of the switch.

7. Production tests

Production tests are those tests made to check the quality and uniformity of the workmanship and materials used in the manufacture of subsurface switches. Switches shall meet the production tests described in 7.1, 7.2, 7.3, and 7.4 (see 7.5 if required). Production tests shall be performed on every completely assembled and sealed switch.

--`,,`-`-`,,`,,`,`,,`---
Copyright © 2001 IEEE. All rights reserved.

Copyright The Institute of Electrical and Electronics Engineers, Inc.
Provided by IHS under license with IEEE
No reproduction or networking permitted without license from IHS Not for Resale

7.1 Circuit resistance test

The purpose of this test is to verify that all switch contacts have been properly aligned and current transfer points have been properly assembled.

7.1.1 Test procedure

The dc resistance of the current-carrying circuit from terminal to terminal of each pole unit in the closed position shall be measured with current of at least 100 A flowing. The resistance shall not exceed a limit for each rating of the switch specified by the manufacturer.

7.2 Sixty hertz withstand test

The tests shall be performed in accordance with 6.4. The test value shall be from Table 1, column 4.

7.3 Leak test

The leak test is intended to verify that a leak does not exist that will impair the dielectric integrity of the assembly during its contemplated service life.

Each assembled switch shall be tested to verify that it does not leak by pressurizing it to 50 kPa or its maximum operating pressure, whichever is greater, for at least 24 h without any detectable leaks. Time may be reduced by use of any equivalent test, such as pressurizing the switch to the appropriate value and applying a soap solution, alcohol, and chalk, or pressurizing the switch with a suitable gas and using a halogen leak detector.

7.4 Operating assurance tests

Each switch shall be operated and tested to verify the following:

a) That the switch position indicators and contacts are in the correct position for both the open and closed positions.
b) That the insulating medium quantity indicator (if provided) is functioning properly
c) That the switch circuit configuration is shown correctly

7.5 Partial discharge (corona) level tests

This test applies only to switches containing insulating material that may be subject to deterioration from partial discharge. The test shall be performed in accordance with 6.7.

This test need not be performed on the completed switch if those components utilizing such insulating material have been previously tested satisfactorily.

8. Conformance tests

If conformance tests are required by the purchaser, they shall be made in accordance with this standard.

Copyright © 2001 IEEE. All rights reserved.
Copyright The Institute of Electrical and Electronics Engineers, Inc.
Provided by IHS under license with IEEE
No reproduction or networking permitted without license from IHS
Not for Resale

8.1 Temperature measurements

When temperature measurements are required for conformance tests, it is sufficient to measure accessible parts and compare with like points on the design tests.

8.2 Impulse withstand tests

When impulse tests are required for conformance tests, switches shall be capable of passing a 1.2 × 50 μs full-wave impulse voltage test series with values as specified by the purchaser in accordance with the following: virtual front time, based on the rated full-wave impulse voltage 1.2 μs with a crest voltage not exceeding the rated full-wave impulse withstand voltage, and with a time to 50% value of the crest voltage not exceeding 50 μs. The test procedure used shall be in accordance with 6.4.4.

8.3 Loop current requirement

The application of the switch may require it to interrupt the current in a loop circuit. However, the resulting voltage across each switch contact should not exceed 10% of the rated maximum voltage.

If tests are necessary to demonstrate this capability, the switch shall interrupt the current value shown in Table 2, column 2 or column 3, at not less then 15% of the rated maximum voltage. The test circuit shown in Figure 6 shall be used.

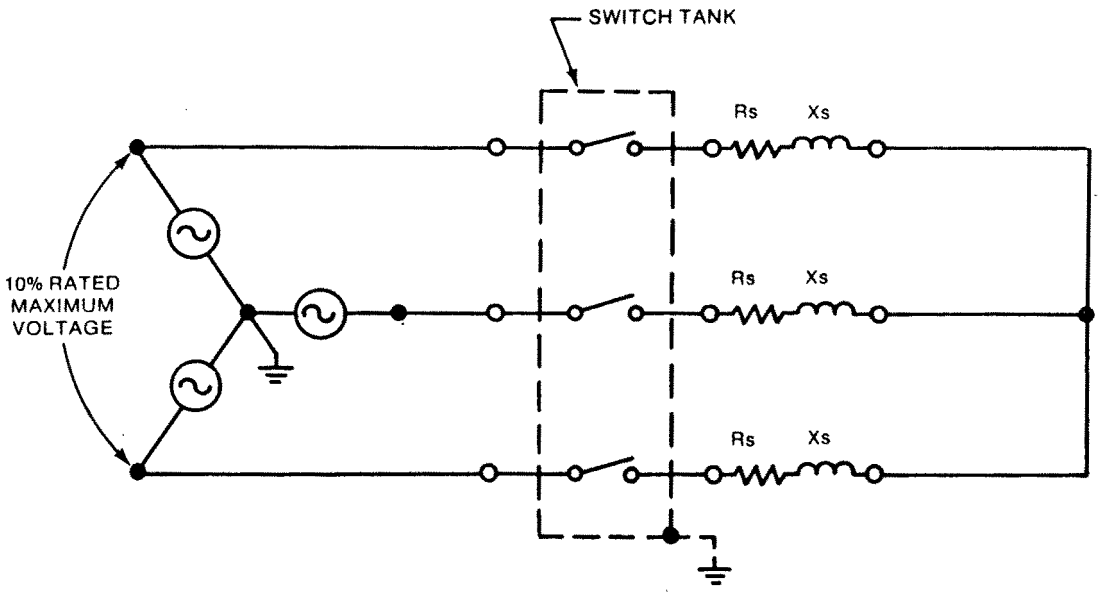

Figure 6—Loop current interruption test circuit

Copyright © 2001 IEEE. All rights reserved.

Copyright The Institute of Electrical and Electronics Engineers, Inc.
Provided by IHS under license with IEEE
No reproduction or networking permitted without license from IHS Not for Resale

9. Construction requirements

9.1 Grounding provision

Unless otherwise specified, one stainless steel grounding pad with a 1/2-13 NC hole, 11.1 mm (7/16 in) deep, shall be provided for each way and shall be located near the center bushing of each way.

9.2 Manual operating provisions

9.2.1 Subsurface switches

Manual operating handles shall turn clockwise to close, counterclockwise to open; or *in* to close and *out* to open. The direction of operation shall be apparent.

Manual operating handles shall be located where they can be operated from the surface with standard live-line tools or lanyard, or both. The force required to operate the handle shall be such that one person in a standing position can readily operate it without standing directly over the switch.

The switch mechanism shall be designed so that operation does not require any special skills, and the closing and opening speeds of the contacts are independent of the speed at which the operating handle is operated.

Manual operating handles shall be capable of being padlocked in both the open and closed positions.

9.2.2 Vault switches

Manual operating handles shall be located where they are easily accessible to a person inside the vault and can be operated with standard live-line tools or lanyard, or both. The force required to operate the handle shall be such that a person can readily operate the switch.

The switch mechanism shall be designed so that operation does not require any special skills, and the closing and opening speed of the contacts are independent of the speed at which the handle is operated.

Manual operating handles shall be capable of being padlocked in all positions.

9.3 Position indicators

Switches shall be provided with position indictors or other suitable means that clearly and positively indicate the open and closed positions of the contacts. For subsurface switches, indicators shall be visible from the surface with the enclosure open. If colors are used to indicate an open and a closed position, red shall signify closed and green shall signify open, with the words *Open* and *Closed* in contrasting colors. Corrosion-resistant and legible lettering (raised or engraved) shall be used.

9.4 Insulating-medium quantity indicators

Where liquid or gas is used as the insulating medium, provision shall be made for personnel to readily determine the insulating liquid level or insulating gas pressure with the switch energized. Indicator markings shall show the safe operating levels or pressures over the temperature range specified in 4.1.

Copyright © 2001 IEEE. All rights reserved.
Copyright The Institute of Electrical and Electronics Engineers, Inc.
Provided by IHS under license with IEEE
No reproduction or networking permitted without license from IHS
Not for Resale

Procedures or devices that require exposure of the insulating medium to the outside environment shall not be used.

9.5 Drain and replacement provisions

Where liquid or gas is used as the insulating medium, provision shall be made to facilitate replacement of the insulating medium with the switch deenergized. For subsurface switches, this provision shall be made on the top of the tank. For vault switches, it shall be made in an easily accessible location.

9.6 Sampling and addition provisions

When a liquid is used as the insulating medium, provisions shall be made to obtain a bottom sample through the top of the tank with the switch energized.

Provisions shall be made for adding the insulating medium, liquid or gas, through the top of the tank for subsurface switches or from an easily accessible location for vault switches with the switch energized.

9.7 Tank construction

The tank and all appurtenance shall be made of corrosion-resistant material, or provided with an impact- and corrosion-resistant finish. In addition, the switching assembly shall be suitable for storage in uncovered areas.

No external portion of the tank of accessories shall trap water.

Switch tanks shall be equipped with mounting provisions (such as feet or support rails) that shall include provision for anchoring the tank to the mounting surface.

Lifting lugs shall be provided and positioned so that the switch will remain level when being lifted. The lugs shall be designed and located to avoid interference between lifting slings and any attachments (bushings, switch handles, etc.), and to avoid scratching or marring the tank finish during handling.

Parking stands shall be provided as specified. (For parking stand dimensions, see IEEE C57.12.26-1992.)

9.8 Terminations

The switch bushings shall accommodate cable terminations in accordance with IEEE Std 386–1995.

9.9 Bushing designation

The switch bushings shall be identified and legibly marked, adjacent to each bushing, with the appropriate phase designation, by the use of a nameplate of stainless steel or other corrosion-resistant material.

Copyright © 2001 IEEE. All rights reserved.

Copyright The Institute of Electrical and Electronics Engineers, Inc.
Provided by IHS under license with IEEE
No reproduction or networking permitted without license from IHS Not for Resale

9.10 Nameplate

A nameplate of stainless steel or other corrosion-resistant material shall be provided. The nameplate shall be securely attached to the top of the tank by means of stainless steel screws, rivets, or other corrosion-resistant fasteners. All letters, schematics, and numbers shall be stamped, embossed, or engraved on the nameplate. The nameplate shall contain at least the following information:

a) The word Switch
b) Name of manufacturer
c) Date of manufacture (month and year, for example, 1–80)
d) Serial number
e) Model number or style number (if any)
f) Rated maximum voltage
g) Rated impulse withstand voltage
h) Rated continuous current
i) Rated load-interrupting current
j) Rated momentary current
k) Rated making current
l) A three-line, bushing-oriented schematic diagram, using standard symbols (this may be put on a separate nameplate)
m) Total weight (including insulating medium)
n) Type and quantity of insulating medium

9.11 User identification plate

Space and provisions for attaching a user identification (switch number) plate shall be provided adjacent to each switch handle, when specified. Dimensions of this plate are shown in Figure 7.

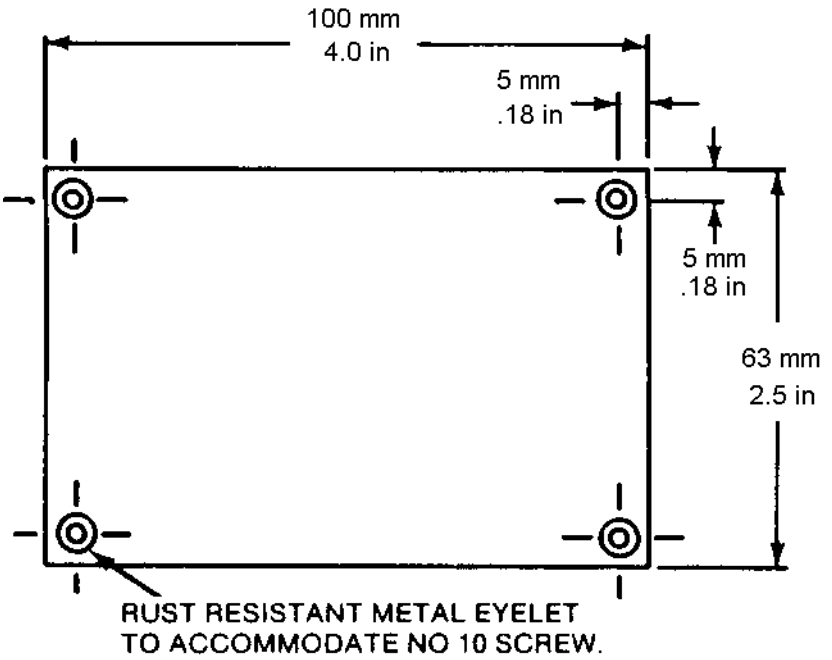

Figure 7—Outline for user identification plate

Copyright © 2001 IEEE. All rights reserved.
Copyright The Institute of Electrical and Electronics Engineers, Inc.
Provided by IHS under license with IEEE
No reproduction or networking permitted without license from IHS
Not for Resale

10. Shipping requirements

Shipping requirements are as follows:

a) The switch shall be completely assembled and, unless otherwise specified, include the correct amount of insulating medium, considering the temperature of the medium.
b) Internal positive pressure shall be applied to prevent entrance of moisture.
c) Plugs shall be provided for threaded holes, and caps shall be provided for threaded studs and bushings.
d) Instructions and checklists for the inspection, installation, and maintenance of the switch shall be provided.
e) Switches shall be properly packaged and braced to prevent damage during shipment.

Copyright © 2001 IEEE. All rights reserved.

Copyright The Institute of Electrical and Electronics Engineers, Inc.
Provided by IHS under license with IEEE
No reproduction or networking permitted without license from IHS Not for Resale