American National Standard

requirements for oil-filled capacitor switches for alternating-current systems

ANSI C37.66-1969 (R1982)

american national standards institute, inc.
1430 broadway, new york, new york 10018

Copyright The Institute of Electrical and Electronics Engineers, Inc.
Provided by IHS under license with IEEE
No reproduction or networking permitted without license from IHS
Not for Resale

American National Standard Requirements for Oil-Filled Capacitor Switches for Alternating-Current Systems

Sponsor
Electrical and Electronics Standards Board

Approved December 19, 1969
American National Standards Institute, Inc

Copyright The Institute of Electrical and Electronics Engineers, Inc.
Provided by IHS under license with IEEE
No reproduction or networking permitted without license from IHS
Not for Resale

American National Standard

An American National Standard implies a consensus of those substantially concerned with its scope and provisions. An American National Standard is intended as a guide to aid the manufacturer, the consumer, and the general public. The existence of an American National Standard does not in any respect preclude anyone, whether he has approved the standard or not, from manufacturing, marketing, purchasing, or using products, processes, or procedures not conforming to the standard. American National Standards are subject to periodic review and users are cautioned to obtain the latest editions.

The American National Standards Institute does not develop standards and will in no circumstances give an interpretation of any American National Standard. Moreover, no person shall have the right or authority to issue an interpretation of an American National Standard in the name of the American National Standards Institute.

CAUTION NOTICE: This American National Standard may be revised or withdrawn at any time. The procedures of the American National Standards Institute require that action be taken to reaffirm, revise, or withdraw this standard no later than five years from the date of approval. Purchasers of American National Standards may receive current information on all standards by calling or writing the American National Standards Institute.

Published by

American National Standards Institute, Inc
1430 Broadway, New York, New York 10018

Copyright © 1970 by American National Standards Institute, Incorporated
All rights reserved.

No part of this publication may be reproduced in any form,
in an electronic retrieval system or otherwise,
without the prior written permission of the publisher.

Printed in the United States of America

A3C283/6

Copyright The Institute of Electrical and Electronics Engineers, Inc.
Provided by IHS under license with IEEE
No reproduction or networking permitted without license from IHS

Not for Resale

Foreword

(This Foreword is not a part of American National Standard Requirements for Oil-Filled Capacitor Switches for Alternating-Current Systems, C37.66-1969.)

This standard is a new American National Standard covering oil-filled capacitor switches and represents current practice in this product area in the United States. This standard was developed from an original proposal submitted by the NEMA Switchgear Section.

The preparation of ANSI C37.66-1969 was the cooperative work of the IEEE Switchgear Committee (Reclosers and Sectionalizers Subcommittee), the NEMA Switchgear Section (SG 13-Automatic Circuit Recloser Technical Committee), and the C37 Subcommittee on Automatic Circuit Reclosers and Line Sectionalizers.

Upon recommendation of this latter subcommittee, the proposed American National Standard was voted on by Standards Committee C37 on Power Switchgear, and subsequently approved as an American National Standard.

Suggestions for improvement gained in the use of this standard will be welcome. They should be sent to the American National Standards Institute, Inc, 1430 Broadway, New York, N.Y. 10018.

The Standards Committee on Power Switchgear, C37, which reviewed and approved this standard, had the following personnel at the time of approval:

V. L. Cox, *Chairman* W. R. Wilson, *Vice-Chairman*

J. G. Werner, *Secretary*

Organization Represented	*Name of Representative*
Association of American Railroads	W. O. Muller
Association of Iron and Steel Engineers	T. S. Novak
Electric Light and Power Group	H. W. Grissler
	R. R. Wagstaff
	J. E. Beehler
	H. G. Frus
	J. P. Markey *(Alt)*
	F. R. Solis *(Alt)*
Institute of Electrical and Electronics Engineers	J. E. Conner
	H. L. Lowe
	J. B. Owens
	H. O. Simmons, Jr
	G. W. Walsh
	H. C. Barnes *(Alt)*
	W. A. Carter *(Alt)*
	R. E. Friedrich *(Alt)*
	W. A. Hall *(Alt)*
National Electrical Manufacturers Association	W. R. Wilson
	R. W. Dunham
	A. P. Colaiaco
	C. E. Gryctko
	W. J. Smith
	B. K. Sturgis
	J. G. Werner *(Alt)*
Tennessee Valley Authority	O. S. C. Hammer
U.S. Department of the Army	W. K. Cave
U.S. Department of the Navy	J. W. Berryman, Jr
	L. W. Johnson *(Alt)*
U.S. Department of the Interior, Bureau of Reclamation	E. M. Tomsic
U.S. Department of Defense, Defense Communications Agency	C. D. Friday

Copyright The Institute of Electrical and Electronics Engineers, Inc.
Provided by IHS under license with IEEE
No reproduction or networking permitted without license from IHS
Not for Resale

The work of preparing this standard was cooperatively done by the IEEE Subcommittee on Reclosers and Line Sectionalizers and the C37 Subcommittee on Automatic Circuit Reclosers and Line Sectionalizers.

The membership of the IEEE Subcommittee was as follows:

F. W. Edwards, *Chairman* E. R. Longman, *Secretary*

R. S. Arnold
A. L. Bohlinger
R. A. Byron
W. L. Carey
L. B. Crann
R. A. Few
E. J. Field
J. P. Fitzgerald
E. R. Sanchez
B. H. Schultz

The membership of the C37 Subcommittee was as follows:

B. H. Schultz, *Chairman* J. G. Werner, *Secretary*

R. S. Arnold
A. L. Bohlinger
R. A. Byron
W. L. Carey
L. B. Crann
F. W. Edwards
R. A. Few
E. J. Field
J. P. Fitzgerald
E. R. Longman
E. R. Sanchez

Contents

SECTION		PAGE
1.	Scope	7
2.	Service Conditions	7
2.1	Usual Service Conditions	7
2.2	Unusual Service Conditions	7
3.	Definitions	7
4.	Ratings	10
4.1	Rating Information	10
4.2	Rated Maximum Voltage	10
4.3	Rated Frequency	10
4.4	Rated Transient Inrush Frequency	10
4.5	Rated Continuous Current	10
4.6	Rated Capacitive Switching Current	11
4.7	Rated Symmetrical Making Current	11
4.8	Rated Asymmetrical Making Current	11
4.9	Rated High-Frequency Transient Making Current	11
4.10	Rated Momentary Asymmetrical Current	11
4.11	Rated One-Half Second Symmetrical Current	11
4.12	Rated One-Second Symmetrical Current	11
4.13	Rated Impulse Withstand Voltage	11
4.14	Rated Control Voltages and Ranges	11

Copyright The Institute of Electrical and Electronics Engineers, Inc.
Provided by IHS under license with IEEE
No reproduction or networking permitted without license from IHS
Not for Resale

SECTION PAGE

5. Design Tests 11
5.1 General 11
5.2 Insulation (Dielectric) Tests 12
5.3 Short-Time Current Tests 12
5.4 Rated Making Current Tests 13
5.5 Operating Duty Tests 13
5.6 Temperature Rise Tests 14
5.7 Radio Influence Voltage Tests 16
5.8 Mechanical Life Tests 17
5.9 Control Wiring Tests 17

6. Production Tests 17

7. Conformance Tests 17

8. Construction Requirements 17
8.1 Grounding Provision 17
8.2 Manual Operating Provision 17
8.3 Mounting Provisions 17
8.4 Position Indicator 17
8.5 Nameplate Marking 17

9. Revision of American National Standards Referred to in This Document 18

Tables
Table 1 Schedule of Preferred Ratings for Oil-Filled Capacitor Switches for Alternating-Current Systems 8
Table 2 Altitude Correction 10
Table 3 Size and Length of Bare Copper Leads 14
Table 4 Test Voltages and Limits of Conducted Radio Influence Voltage 16

Figures
Fig. 1 Suggested Test Circuit for Rated Making Duty Tests (Rated Asymmetrical Making Current Test) 15
Fig. 2 Suggested Test Circuit for Rated Making Duty Tests (Rated Symmetrical Making Current Test) 15

Copyright The Institute of Electrical and Electronics Engineers, Inc.
Provided by IHS under license with IEEE
No reproduction or networking permitted without license from IHS
Not for Resale

American National Standard Requirements for Oil-Filled Capacitor Switches for Alternating-Current Systems

1. Scope

This standard applies to single or multipole alternating-current oil-filled switches for rated maximum voltages of above 1000 volts designed and intended to be used for switching capacitive loads.

This standard covers the application of capacitive load switching wherein the capacitive loads are separated by sufficient inductance to limit the high-frequency transient making peak current to the peak values shown in Table 1 or less.

Swtiches designed and built in accordance with this standard are not intended for use as fault current or noncapacitive load current interrupting devices.

2. Service Conditions

2.1 Usual Service Conditions. Capacitor switches conforming to this standard shall be suitable for operation at their standard ratings provided that:

(1) The temperature of the cooling air (ambient temperature) is not above 40°C or below −30°C.

(2) The altitude does not exceed 3300 feet (1000 meters).

2.2 Unusual Service Conditions

2.2.1 ***Abnormal Ambient Temperature.*** Capacitor switches may be applied at higher or lower ambient temperatures than specified in 2.1, but performance may be affected and special consideration shall be given to these applications.

2.2.2 ***Altitudes Above 3300 Feet (1000 Meters)***

2.2.2.1 Capacitor switches may be applied at altitudes higher than 3300 feet. However, the basic impulse insulation level, rated maximum voltage, and rated continuous current shall be multiplied individually by the correction factors in Table 2, Columns 3 and 4, to obtain values at which the application may be made. (The rated capacitive switching current, related required capabilities in Table 1 and interrupting time are not affected by altitude.)

2.2.2.2 Capacitor switches designed for standard temperature rise may be used at normal current rating without exceeding total temperature limitations, provided that the ambient temperature does not exceed the ambient allowed in 2.1 multiplied by the factor shown in Column 5 of Table 2.

2.2.3 ***Other Conditions Which May Affect Design and Applications.*** Where other unusual conditions exist, they should be brought to the attention of those responsible for the design and application of capacitor switches. Examples of such conditions are:

(1) Damaging fumes or vapors, excessive or abrasive dust, explosive mixtures of dust or gases, steam, salt spray, excessive moisture or dripping water, etc.

(2) Abnormal vibration, shocks, or tilting.

(3) Unusual transportation or storage conditions.

(4) Unusual operating duty, frequency of operation, difficulty of maintenance, poor wave form, unbalance voltage, unusual insulation requirements, etc.

3. Definitions

The definitions of terms contained in this standard, or in other American National Standards referred to in this document, are not intended to embrace all legitimate meanings of the terms. They are applicable only to the subject treated in this standard.

For additional definitions, see American National Standard Definitions for Power Switchgear, C37.100-1966.

An asterisk (*) indicates that, at the time this standard was approved, there was no corresponding definition in American National Standard C37.100-1966.

capacitive load. A lumped capacitance which is switched as a unit.*

Copyright The Institute of Electrical and Electronics Engineers, Inc.
Provided by IHS under license with IEEE
No reproduction or networking permitted without license from IHS
Not for Resale

Copyright The Institute of Electrical and Electronics Engineers, Inc.
Provided by IHS under license with IEEE
No reproduction or networking permitted without license from IHS

Table 1
Schedule of Preferred Ratings for Oil-Filled Capacitor Switches for Alternating-Current Systems

Identification			Low-Frequency Insulation Level Withstand Tests (kV, rms)			Current Ratings in Amperes								
											Short Time			
Line Number	Nominal Voltage Class (kV, rms)	Rated Maximum Voltage (kV, rms)	1 Min Dry	10 s Wet	Rated Impulse Withstand Voltage (kV Crest)	Continuous (60 Hz, rms)	Capacitive Switching (rms)*	Symmetrical (rms)†	Asymmetrical (rms)	High-Frequency Transient Making Peak‡	Momentary rms Asymmetrical	½ s rms Symmetrical	1 s rms Symmetrical	Rated Transient Inrush Frequency (Hz)‡
(1)	(2)	(3)	(4)	(5)	(6)	(7)	(8)	(9)	(10)	(11)	(12)	(13)	(14)	(15)
						Distribution Switches§								
1	14.4	15.0	35	30	95	200	200	6000	9000	12 000	9000	6000	4500	6000
						Power Switches§								
2	14.4	15.5	50	45	110	400	400	13 500	20 000	20 000	20 000	13 500	10 000	4000
3	14.4	15.5	50	45	110	600	600	16 000	24 000	24 000	24 000	16 000	12 000	3400

*This rating recognizes that in closing in on capacitive loads, transient currents may be present which can impose limitations on the device because of thermal and magnetic effects. Because of this the rated capacitive switching current is based on the designated operating duty test specified in 5.5.

†This rating recognizes the possibility that a switch may occasionally close on a short-circuited capacitive load. If the switched capacitive load is paralleled by several other capacitive loads of equal or greater size, the transient inrush current may be double, and the frequency of the transient current about one-half that possible when the bank is switched normally. The ability of the switch to withstand this abnormal duty is based on the rated making duty test specified in 5.4.

‡Capacitor switches which use switched resistors or other current limiting means will not be subjected to the high-frequency transient making current or the transient inrush frequency. However, the test circuit shall be capable of producing the values specified (see 5.5.2).

§ Distribution capacitor switches are distinguished from power capacitor switches primarily by their lower continuous current and rated maximum voltage ratings, and their lower dielectric withstand voltages listed in this table (see the definition for rated maximum voltage in section 3). Distribution capacitor switches are generally used on pole-mounted capacitor banks. Power capacitor switches are usually used to switch substation capacitor banks.

Not for Resale

capacitor switch. A switch capable of making and breaking capacitive currents of capacitor banks.*

conformance tests. Those tests that are specifically made to demonstrate the conformity of switchgear or its component parts with applicable standards.

design tests. Those tests made to determine the adequacy of the design of a particular type, style, or model of switchgear or its component parts to meet its assigned ratings and to operate satisfactorily under normal service conditions or under special conditions if specified.

NOTE: Design tests are made only on representative apparatus to substantiate the ratings assigned to all other apparatus of basically the same design. These tests are not intended to be used as a part of normal production. The applicable portion of these design tests may also be used to evaluate modifications of a previous design and to assure that performance has not been adversely affected. Test data from previous similar designs may be used for current designs, where appropriate.

groundable parts. Those parts that may be connected to ground without affecting operation of the device.

nominal system voltage. A nominal value assigned to designate a system of a given voltage class.

NOTE: See American National Standard Guide for Preferred Voltage Ratings for AC Systems and Equipment, C84.1-1954.

normal-frequency recovery voltage. The normal-frequency rms voltage that occurs across the terminals of an ac circuit interrupting device after the interruption of the current and after the high-frequency transients have subsided.

NOTE: For determination of the normal-frequency recovery voltage, see American National Standard Methods for Determining the Values of a Sinusoidal Current Wave and Normal-Frequency Recovery Voltage for AC High-Voltage Circuit Breakers, C37.05-1964.

operation. A closing followed by an opening.*

production tests (for switchgear). Those tests made to check the quality and uniformity of the workmanship and materials used in the manufacture of switchgear or its components.

rated. A qualifying term that, applied to an operating characteristic, indicates the designated limit or limits of the characteristic for application under specified conditions.

NOTE: The specific limit or limits applicable to a given device is specified in the standard for that device, and included in the title of the rated characteristic; for example, Rated Maximum Voltage, Rated Frequency Range, etc.

rated asymmetrical making current. The maximum rms current, at rated frequency, including the dc component, against which a device is required to close and hold under specified conditions.*

NOTE: Its rms value is measured from the envelope of the current wave at the time of the first major current peak. (See ANSI C37.05-1964.)

rated capacitive switching current. The rms symmetrical value of the highest capacitive load current which a device is required to make and interrupt at rated maximum voltage as part of its designated operating duty.*

NOTE: The capacitive switching current rating should be at least 135 percent of the rated capacitor bank current. The excess current can be caused by harmonics, overvoltage, or plus tolerance, or any of these, in the capacitor kvar.

rated continuous current. The designated limit of rms current at rated frequency which a device is required to carry continuously without exceeding a specified limit of observable temperature rise under specified conditions.*

rated control voltage. The designated voltage which is to be applied to the closing or tripping device to open or close the switch.*

rated frequency. The frequency for which a device is designed.*

rated high-frequency transient making current. The peak value of the high-frequency current, with specified damping, which a device is required to withstand as part of its designated duty.*

rated impulse withstand voltage (BIL). The designated limit of crest voltage of an impulse that, under specified conditions, can be applied without causing flashover or puncture.*

rated maximum voltage. The highest rms voltage which a device is designed to operate.*

NOTE: This voltage corresponds to the maximum tolerable zone primary voltage at distribution transformers for distribution switches and at substations and on transmission systems for power switches given in ANSI C84.1-1954.

rated momentary current. The maximum rms total current which a device is required to carry. The current is the rms value, including the dc component, at the major peak of the maximum cycle as determined by the envelope of the current wave.*

Copyright The Institute of Electrical and Electronics Engineers, Inc.
Provided by IHS under license with IEEE
No reproduction or networking permitted without license from IHS
Not for Resale

rated short-time current. The highest rms current including dc component which a device is required to carry without injury during specified short-time intervals, recognizing the limitations imposed by both thermal and electromagnetic or mechanical effects.*

rated symmetrical making current. The maximum rms current at rated frequency without dc component against which a device is required to close and hold in the presence of two times the rated high frequency transient making current at a frequency equal to one-half of the rated transient inrush frequency and under other specified conditions.*

rated transient inrush frequency. The highest frequency of the transient inrush current which a device is required to withstand as part of its designated operating duty*

NOTE: Such operating characteristics as current, voltage, frequency, etc, may be given in the rating.

rating. The designated limit(s) of the rated operating characteristic(s) of a device.

recovery voltage. The voltage that occurs across the terminals of a pole of a circuit interrupting device upon interruption of current.

transient overvoltage. The peak voltage above ground during the transient conditions resulting from the operation of a circuit interrupting device.*

NOTE: It is measured at the source side terminals of the device and is expressed in multiples of the peak values of the operating line-to-ground voltage at the device with the load connected.

transient recovery voltage. The voltage transient that occurs across the terminals of a pole of a circuit switching device upon interruption of the current.

NOTE: In a multipole switching device, it is usually applied to the voltage across the first pole to clear.

Table 2
Altitude Correction

		Altitude Correction Factor to Be Applied to		
Feet	Meters	Voltage Rating	Current Rating	Ambient Temperature
(Col 1)	(Col 2)	(Col 3)	(Col 4)	(Col 5)
3300	1000	1.00	1.00	1.00
4000	1200	0.98	0.99	0.99
5000	1500	0.95	0.99	0.98
10 000	3000	0.80	0.96	0.92
16 000	4900	0.63	0.93	0.85

NOTE: Correction factors in Columns 4 and 5 shall not be applied simultaneously.

4. Ratings

4.1 Rating Information. The rating shall include the following items:

(1) Rated maximum voltage
(2) Rated frequency
(3) Rated transient inrush frequency
(4) Rated continuous current
(5) Rated capacitive switching current
(6) Rated symmetrical making current
(7) Rated asymmetrical making current
(8) Rated high-frequency transient making current
(9) Rated momentary asymmetrical current
(10) Rated one-half second symmetrical current
(11) Rated one-second symmetrical current
(12) Rated impulse withstand voltage
(13) Rated control voltage

4.2 Rated Maximum Voltage. The rated maximum voltages of capacitor switches shall be the values shown in Column 3 of Table 1.

4.3 Rated Frequency. The rated frequency of capacitor switches shall be 60 Hz.

4.4 Rated Transient Inrush Frequency. The rated transient inrush frequencies of capacitor switches shall be the values shown in Column 15 of Table 1.

4.5 Rated Continuous Current. The rated continuous current of capacitor switches shall be the values shown in Column 7 of Table 1.

4.5.1 ***Conditions of Continuous Current Rating***

(1) Capacitor switches are used under the usual service conditions defined in 2.1.

(2) Current ratings shall be based on the total temperature limits of the materials used for such parts. A temperature rise reference is given to permit testing at reduced ambient.

(3) Capacitor switches without enclosures shall have their ratings based on a 40°C ambient temperature. Capacitor switches installed in enclosures shall have their ratings based on the ventilation of such enclosures and a 40°C ambient temperature outside the enclosure.

4.5.2 ***Limits of Observable Temperature Rise.*** At rated current, the observable hottest spot temperature rise above ambient of each of the various parts shall not exceed the following:

Copyright The Institute of Electrical and Electronics Engineers, Inc.
Provided by IHS under license with IEEE
No reproduction or networking permitted without license from IHS
Not for Resale

	Limit of Observable Hottest-Spot Temperature Rise (Degrees C)
Contacts, bushing terminals and conducting joints when clean and bright	
Copper to copper	30
Silver to silver or equivalent in oil	50
Silver to silver or equivalent in air	65
Oil 1 Inch (2.5 cm) below surface	45
Coils and their terminals	
Class 90°C Insulation	40
Class 105°C Insulation	55
Class 130°C Insulation	80
Class 155°C Insulation	105
Class 180°C Insulation	130
Class 220°C Insulation	180

NOTE: The temperature limits on which the ratings of capacitor switches are based are largely determined by the character of insulating materials used. For the purpose of establishing temperature limits, insulating materials are classified as shown in General Principles for Temperature Limits in the Rating of Electric Equipment, IEEE No. 1, April 1969. It is recognized that the above limits are generally less than those associated with the insulating classes shown in IEEE No. 1, since such insulation may be subject to severe mechanical as well as dielectric stress when used in high-voltage capacitor switches.

4.6 Rated Capacitive Switching Current. The rated capacitive switching current of capacitor switches shall be the values shown in Column 8 of Table 1.

4.7 Rated Symmetrical Making Current. The rated symmetrical making current of capacitor switches shall be the values shown in Column 9 of Table 1.

4.8 Rated Asymmetrical Making Current. The rated asymmetrical making current of capacitor switches shall be the values shown in Column 10 of Table 1.

4.9 Rated High-Frequency Transient Making Current. The rated high-frequency transient making current of capacitor switches shall be the values shown in Column 11 of Table 1.

4.10 Rated Momentary Asymmetrical Current. The rated momentary asymmetrical current of capacitor switches shall be the values shown in Column 12 of Table 1.

4.11 Rated One-Half Second Symmetrical Current. The one-half second symmetrical current of capacitor switches shall be the values shown in Column 13 of Table 1.

4.12 Rated One-Second Symmetrical Current. The rated one second symmetrical current of capacitor switches shall be the values shown in Column 14 of Table 1.

4.13 Rated Impulse Withstand Voltage. The rated impulse withstand voltage of capacitor switches shall be the values given in Column 6 of Table 1 and shall be negative or positive, depending on which gives the lower insulation strength. For wave shape, refer to 5.2.1.

4.14 Rated Control Voltages and Ranges. The rated control voltages and ranges shall be:

Nominal Voltage Rating (Volts)	Voltage Range (Volts)
Direct Current	
24	14-30
48	28-60
125	90-130
250	180-260
Alternating Current - 60 Hz	
120	107-127
240	214-254

The control voltage is measured at the terminals of the operating mechanism with the operating current flowing.

5. Design Tests

Capacitor switches shall be capable of meeting the design tests described in 5.2 thru 5.9 inclusive. Once made, the design tests need not be repeated unless the design is changed so as to modify the performance characteristics of the switch.

5.1 General

5.1.1 ***Condition of Switch To Be Tested.*** The switch shall be new and in good condition, and tests shall be applied before the switch is put into commercial service, unless otherwise specified.

5.1.2 ***Mounting of Specimen.*** The switch shall be mounted on its hanger or mounting means in a manner closely approximating the normal service conditions for which it is designed.

Copyright The Institute of Electrical and Electronics Engineers, Inc.
Provided by IHS under license with IEEE
No reproduction or networking permitted without license from IHS
Not for Resale

5.1.3 ***Grounding of Specimen.*** The housing or hanger, or both, and all groundable parts shall be grounded by a lead attached to the ground terminal and other groundable parts in a manner not to decrease the withstand voltage.

5.1.4 ***Frequency.*** The frequency of the supply voltage shall be 60 Hz ±5 percent. A sine wave of acceptable commercial standards shall be applied. Such a wave shape is defined in 4.2 of American National Standard Techniques for Dielectric Tests, C68.1-1968.

5.1.5 ***Oil-Filled Capacitor Switches.*** The tanks of oil-filled capacitor switches shall be filled with the prescribed amount of oil.

5.2 Insulation (Dielectric) Tests. Capacitor switches shall be capable of withstanding without damage the following test voltages when tested in accordance with 5.1 and as follows:

5.2.1 ***Withstand Test Voltages***

(1) Impulse withstand test voltage shall be a 1.2 x 50μs voltage impulse with specified tolerances and having a crest value as given in Column 6 of Table 1. At least three positive and three negative impulses shall be applied to the test specimen. If flashover occurs on only one test during any group of three consecutive tests, three more tests shall be made. If the capacitor switch successfully withstands all three of the second group of tests, the flashover in the first group shall be considered a random flashover and the capacitor switch shall be considered as having successfully passed the test. If an additional flashover occurs, the capacitor switch shall be considered to have failed. The following tolerances shall apply during these tests, unless otherwise specified.

(a) Design Tests—Capacitor switches shall pass a full wave 1.2 x 50μs voltage impulse with a virtual front time, based on the rated full wave impulse voltage, equal to or less than 1.2μs, with a crest voltage equal to or exceeding the crest value given in Column 6 of Table 1, and with a time to the 50 percent value of the crest voltage equal to or greater than 50μs.

(b) Conformance Tests—When conformance tests are performed, capacitor switches shall be capable of passing a 1.2 x 50μs voltage impulse with a virtual front time, based on the rated full wave impulse voltage, equal to or greater than 1.2μs, with a crest voltage not to exceed the value given in Column 6 of Table 1, and with a time to the 50 percent value of the crest voltage not to exceed 50μs.

(2) Low-frequency withstand voltages shall be the values given in Columns 4 and 5 of Table 1 with a test duration of 60 seconds for the dry test and 10 seconds for the wet test. Wet tests shall be made in accordance with American National Standard Wet Tests, C77.1-1943 (Reaffirmed 1953).

If bushing coordination gaps are used, they shall be retained in place during tests and shall withstand these test voltages.

5.2.2 ***Electrical Connections.*** Electrical connections shall be made by means of bare wire, inserted in each terminal. These wires shall project in such a manner as not to decrease the withstand value. Any necessary bends may be made at the terminal.

For terminal to ground tests, the test lead connection shall be made to the wires projecting from the terminals, with the switch in the closed position.

5.2.3 ***Points of Application of Test Voltage.*** Tests 1, 2, and 3 shall be made on multipole switches. Tests 1 and 2 shall be made on single-pole switches.

Test 1: With the capacitor switch closed and with tanks or groundable parts grounded, the test voltage shall be applied to all of the terminals on one side of the switch.

Test 2: With the capacitor switch open, the test voltage shall be applied simultaneously to the terminals on one side of the switch. The other terminals, tanks, or groundable parts shall be grounded. Then, reverse connections and repeat procedure.

Test 3: With the capacitor switch closed, the test voltage shall be applied to the middle phase of the switch. The terminals of the other phases and all tanks or groundable parts, or both, shall be grounded.

5.2.4 ***Temperature.*** Dielectric tests shall be made at the temperature attained under the conditions of commercial testing.

5.2.5 ***Dielectric Test Procedures and Voltage Measurements.*** The dielectric test procedures and the methods of voltage measurement shall be in accordance with ANSI C68.1-1968.

5.3 Short-Time Current Tests. Capacitor switches shall carry the rated short-time currents as given in Table 1 when tested as specified in 5.1 and as follows:

Copyright The Institute of Electrical and Electronics Engineers, Inc.
Provided by IHS under license with IEEE
No reproduction or networking permitted without license from IHS
Not for Resale

5.3.1 ***Test Practices*** (Electrical Connections). The capacitor switch shall have bare conductors of the size and length specified in 5.6.2 connected to each terminal.

5.3.2 ***Test Procedures.*** Devices shall be subjected to the specified momentary, one-half and one-second currents for the stated times.

5.3.2.1 *Determination of Momentary Current.* The value of momentary current shall be determined from the envelope of the current wave and shall be the rms value, including the direct-current component if present, at the time of the major peak of the maximum cycle of current. The test period shall extend for not more than 10 cycles. Determine the magnitude of current in accordance with ANSI C37.05-1964.

5.3.2.2 *Determination of One-Half and One-Second Currents.* The value of current may be determined by means of an oscillograph or other suitable instrument. The device shall be considered to have been properly tested if the integrated heating equivalent of the one-half or one-second rating has been obtained.

5.3.2.3 *Condition After Test.* There shall be no visible damage to the device after the tests have been completed. However, the tests may result in some visual evidence of the device having passed current, such as slight contact markings. When this occurs, rating shall be considered met when the device will withstand repeated mechanical operations without cumulative damage and is capable of carrying its rated continuous current without exceeding the temperature limits specified for the device being tested. The switch shall be capable of being tripped electrically.

5.4 Rated Making Current Tests

5.4.1 ***Operating Performance.*** A capacitor switch shall be capable of closing and holding once against each of the making currents specified in Table 1 without emitting flame or appreciable quantity of oil and without excessive damage (see 5.4.4) to any of its parts.

5.4.2 ***Test Procedures.*** The rated making current tests shall consist of closing the switch and holding once for a period of not more than ten cycles against each of the following making currents:

(1) Rated asymmetrical making current
(2) Rated symmetrical making current

Maintenance and adjustment to the switch may be performed between the two tests. Suggested test circuits for the rated making current tests are shown in Figs. 1 and 2.

5.4.3 ***Determination of Current.*** For determination of current, the method shown in ANSI C37.05-1964 shall be used.

5.4.4 ***Condition After Test.*** After each of these tests the switch shall be capable of withstanding rated maximum voltage and of carrying rated continuous current. The temperature rise specified in 4.5.2 may be exceeded. The switch shall be inspected and may require maintenance.

5.5 Operating Duty Test. Capacitor switches shall be capable of meeting the operating duty test specified in 5.5.2.

5.5.1 ***Test Voltages.*** A test voltage of 1.2 times the rated maximum voltage shall be used when tests are made on a single pole switch to demonstrate performance on a three-phase electric circuit. This test voltage shall also be used on a single pole of a three pole switch when simultaneous opening of all three poles, within one-quarter cycle, will not occur.

A test voltage of 0.87 times the rated maximum voltage shall be used when tests are made on a single pole of a three-pole switch having contacts mechanically ganged together for simultaneous operation.

NOTE: When three single-pole switches are used to switch an ungrounded wye or delta connected capacitor bank the maximum peak recovery voltage may approach 4.1 times the crest value of normal line-to-neutral operating voltage or 2.37 times the crest of normal line-to-line operating voltage. For single-phase switching the maximum peak recovery voltage approaches two times the crest value of operating voltage. Therefore, testing single-phase at 1.2 times rated maximum voltage will result in approximately the same recovery voltage as three-phase switching of an ungrounded wye or delta connected capacitor bank at rated maximum voltage.

5.5.2 ***Test Requirements***

5.5.2.1 The operating duty test shall consist of 1200 operations, without adjustment, of a capacitive switching current which is:

(1) 90-100 percent of the rated switching current during the first 400 operations.

(2) 45-55 percent of the rated switching current during the second 400 operations.

(3) 15-20 percent of the rated switching current during the last 400 operations.

5.5.2.2 During the operations at 90 to 100 percent of rated switching current:

(1) The test circuit for single pole switch shall be capable of producing a high-frequency inrush current with 1.2 times rated maximum voltage at the capacitor that shall be equal in magni-

Copyright The Institute of Electrical and Electronics Engineers, Inc.
Provided by IHS under license with IEEE
No reproduction or networking permitted without license from IHS
Not for Resale

tude to the rated high-frequency transient making current at a frequency equal to the rated transient inrush frequency with a tolerance of ±10 percent.

(2) The test circuit for a single pole of a three-pole switch shall be capable of producing a high-frequency inrush current, with 0.87 times rated maximum voltage at the capacitor, that shall be equal in magnitude to the rated high-frequency transient making current at a frequency equal to the rated transient inrush frequency with a tolerance of ±10 percent.

(3) The damping of the high-frequency current shall be such that the ratio of two successive current peaks, one transient cycle apart shall be between 0.40 and 0.55 without arc voltage and without such damping resistors as are part of the switch.

5.5.2.3 For operations at 45-55 percent and 15-20 percent of rated switching currents the parameters of the test circuit shall remain the same except that the capacitance of the load being switched will be reduced to obtain the required switching current.

5.5.2.4 The following are general requirements for all tests:

(1) All 1200 operations shall be at random with respect to the point on the voltage wave at which closing or opening occurs.

(2) The 60 Hz short-circuit current of the test circuit with rated maximum voltage at the capacitors shall be at least equal to the rated momentary current.

(3) A sufficient time interval should be used between operations to prevent formation of excessive pressure and to prevent accumulation of gases from preceding operations.

(4) The switch shall be able to perform its designated operating duty test with the control voltage at both the maximum voltage and minimum voltage of its rated control voltage range.

(5) The maximum transient overvoltage produced during the operating duty tests shall not exceed 2.5 times the peak line-to-ground voltage.

5.5.3 ***Condition After Test.*** After the operating duty test, the contacts and oil may require maintenance.

5.5.4 ***Interpretation of Test.*** The above test is intended to indicate the capabilities of the switch over the full range of typical loads. It does not imply, however, that the switch can successfully switch any one load up to and including its rated switching current through 1200 operations. Also, it is not inferred that the switch can meet its maximum making duty without inspection and maintenance.

5.6 Temperature Rise Tests. Capacitor switches shall meet the conditions of continuous current rating and limits of observable temperature rise as specified in 4.5.1 and 4.5.2, respectively, when tested as specified in 5.1 and as follows.

5.6.1 ***Test Conditions.*** The device shall be mounted in a closed room substantially free from air currents other than those generated by heat from the device being tested.

5.6.2 ***Electrical Connections.*** The device shall have a bare conductor connected to each terminal, of the size and minimum length specified for the device being tested, as given in Table 3. The connection shall be made to the ends of these conductors.

Table 3
Size and Length of Bare Copper Leads

Rated Continuous Current (Amperes)	Size of Leads	Minimum Length (Inches)	Minimum Length (Centimeters)
200	No. 4/0 AWG Stranded	48	122
400	400 000 cmil (200 mm²)	48	122
600	600 000 cmil (300 mm²)	48	122

5.6.3 ***Test Procedure.*** Rated continuous current at rated frequency shall be applied continuously until the temperature becomes constant. The temperature shall be considered constant when three consecutive values of temperature rise taken at one-half hour intervals at all points where readings are being taken shows a maximum variation of one degree. All temperature determinations shall be made as follows:

5.6.3.1 *Method of Temperature Determination.* This method consists of the determination of the temperature by thermocouples, or by mercury, spirit or resistance thermometers, with any of these instruments being applied to the hottest part of the apparatus.

5.6.3.1.1 Value of Ambient Temperature During Test

(1) The ambient temperature shall be taken as that of surrounding air, which should not be less than 10°C nor more than 40°C.

(2) No correction shall be applied for variations in ambient temperature within the range specified in (1) above.

Copyright The Institute of Electrical and Electronics Engineers, Inc.
Provided by IHS under license with IEEE
No reproduction or networking permitted without license from IHS
Not for Resale

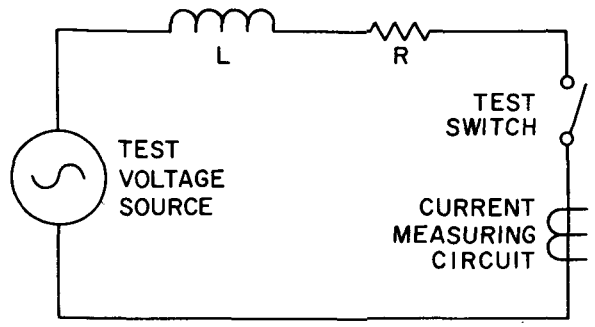

(1) Test voltage equals rated maximum voltage.

(2) Values of L and R are to be selected to produce:

(a) A symmetrical fault current equal to the rated symmetrical making current (Table 1, Col 9).

(b) At maximum asymmetry, a momentary current equal to the rated asymmetrical making current (Table 1, Col 10).

(3) The switch under test must be timed to close at a point on the voltage wave to produce 90-100 percent of rated asymmetrical making current, or take sufficient random test shots until one test produces this value. When testing three-phase switches, which shall be tested on a three-phase circuit, maximum asymmetry will occur only in one phase.

Fig. 1
Suggested Test Circuit for Rated Making Duty Tests
(Rated Asymmetrical Making Current Test)
[See 5.4.2(1)]

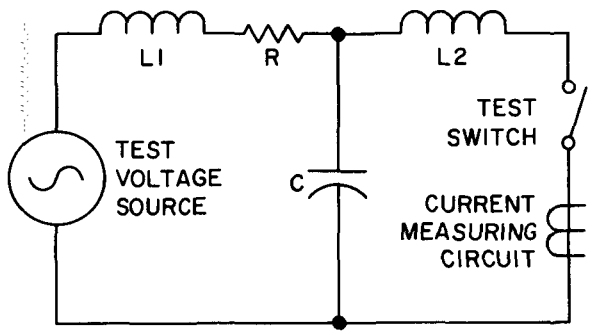

(1) Test voltage equals rated maximum voltage.

(2) Values of $L1$ and R are the same as used for the rated asymmetrical making test.

(3) Values of C and $L2$ are selected to produce, upon closing of the test switch, a peak discharge current equal to twice the high-frequency transient making current rating (Table 1, Col 11) at a frequency equal to one-half the rated transient inrush frequency (Table 1, Col 15).

Fig. 2
Suggested Test Circuit for Rated Making Duty Tests
(Rated Symmetrical Making Current Test)
[See 5.4.2 (2)]

(3) Temperature tests may be made at ambient temperatures outside the range specified, if suitable and agreed upon correction factors are available.

5.6.3.2 *Determination of the Ambient Temperature*

5.6.3.2.1 Placing of Thermocouples (Thermometers). The ambient temperature shall be determined by taking the average of the readings of three thermocouples (thermometers) placed 12 inches (30 centimeters) to one side of the device and vertically located as follows:

(1) One 12 inches (30 cm) above the device
(2) One 12 inches (30 cm) below the device
(3) One midway between the above two positions

5.6.3.2.2 Use of Oil Cup. In order to avoid errors due to the time lag between the temperature of apparatus and the variations in the ambient temperature, all reasonable precautions must be taken to reduce these variations and the errors arising therefrom. Thus, when the ambient temperature is subject to such variations that error in taking the temperature rise might result, the thermocouple (thermometer) for determining the ambient temperature should be immersed in a suitable liquid (such as oil), in a suitable heavy cup. A convenient form for such an oil cup consists of a metal cylinder with a hole drilled partly through it. This hole is filled with oil and the thermocouple (thermometer) is placed therein with its end (bulb) well immersed. The response of the thermocouple (thermometer) to various rates of temperature change will depend largely upon the size, kind of material, and the mass of the containing cup, and may be further regulated by adjusting the amount of oil in the cup. The larger the apparatus under test, the larger should be the metal cylinder employed as an oil cup in the determination of the cooling air temperature. The smallest size of oil cup employed in any case shall consist of a metal cylinder one inch in diameter and two inches high (25 millimeters in diameter and 50 millimeters high).

5.6.3.3 *Covering the Thermometer Bulbs.* If thermometers are used for taking temperatures, the bulbs of thermometers shall be covered by felt pads (cemented to the apparatus), or by oil putty, or by cotton waste.

Dimensions of felt pads used with large apparatus shall be 1½ inches by 2 inches by ⅛

Copyright The Institute of Electrical and Electronics Engineers, Inc.
Provided by IHS under license with IEEE
No reproduction or networking permitted without license from IHS
Not for Resale

inch (4 centimeters by 5 centimeters by 3 millimeters thick). The use of smaller pads is permissible on small apparatus.

5.7 Radio Influence Voltage Tests. Capacitor switches shall meet the specified radio influence voltage limits when tested as specified in 5.1 and as follows.

5.7.1 ***Test Voltages and Limits.*** The test voltages and limits of conducted radio influence voltage when tested at 1000 kHz shall be as shown in Table 4.

5.7.2 ***Test Conditions***

5.7.2.1 *Proximity of Other Apparatus.* No other grounded or ungrounded object or structure (except mounting structure when required) shall be nearer any part of the capacitor switch or its terminals undergoing test than three times the longest overall dimension of the test piece with a minimum allowable spacing of 3 feet (1 meter).

Where space requirements under test conditions do not permit the above clearances to be maintained, the test shall be considered as satisfactory if the limits of radio influence voltage obtained are equal to or less than those specified in 5.7.1. In such cases a record should be made of the object, structures, etc, and their distances from the capacitor switch under test; these data are to be kept for future use in determining the proximity factor.

5.7.2.2 *Electrical Connections.* Conductors of the largest size intended for use with the capacitor switch under test shall be connected to each terminal. The length of the conductors, when used, shall be equal to or greater than the longest overall dimension of the capacitor switch except that the length need not exceed 6 feet (1.8 meters). The free end of any such conductor shall terminate in a sphere having a diameter of twice the diameter of the conductor ±10 percent or shall be shielded in some other suitable manner to eliminate the effect of the end of the conductor as a source of radio influence voltage.

5.7.2.3 *Ambient Radio Noise.* Tests may be made under conditions prevailing at the time and place of test. However, it is recommended that tests be avoided when the radio influence voltage of the test equipment (including the influence voltage of irrelevant electrical devices) exceeds 50 percent of the radio influence voltage of the capacitor switch to be tested.

Table 4
Test Voltage and Limits of Conducted Radio Influence Voltage

Rated Maximum Voltage (kV)	60 Hz Test Voltage (kV)	Limit of Radio Influence Voltage μV at 1000 kHz
15.0-15.5	9.41	*

*RIV limits are under study pending development of American National Standards on methods of measurement of radio influence voltage on high-voltage apparatus.

NOTES:
(1) In the case of capacitor switches having voltage ratings not covered by this table, the test shall be made at 105 percent of the line to neutral voltage, based on the rated maximum voltage.
(2) Capacitor switches having two or more voltage ratings shall be tested on the basis of the highest voltage rating given on the nameplate.

5.7.2.4 *Atmospheric Conditions.* Tests shall be conducted under atmospheric conditions prevailing at the time and place of test, but it is recommended that tests be avoided when the vapor pressure is below 0.2 or exceeds 0.6 of an inch of mercury (below 700 or above 2000 newtons per square meter). Since the effects of humidity and air density upon radio influence voltage are not definitely known, no correction factors are recommended for either at the present time. However, it is recommended that barometric pressure and dry and wet-bulb thermometer readings be recorded so that, if suitable correction factors should be determined, they could be applied to previous measurements.

5.7.3 ***Test Equipment and Procedure.*** The meter used in making radio influence voltage measurements shall be in accordance with American National Standard for Radio-Noise and Field-Strength Meters, 0.015 to 30 Megacycles/Second, C63.2-1963 (American National Standards on methods of measurement of radio influence voltages on high-voltage equipment have not been established as of this date.)

5.7.3.1 *Procedure.* Tests at 1000 kHz shall be made with the capacitor switch in the closed and open positions (when these are applicable).

When tests are made with the capacitor switch in the open position, the radio influence voltage shall be determined with the pole or group of poles not connected to the measuring apparatus both grounded and ungrounded.

5.7.3.2 *Tests on Multipole Devices.* In the case of multipole capacitor switches, one pole

Copyright The Institute of Electrical and Electronics Engineers, Inc.
Provided by IHS under license with IEEE
No reproduction or networking permitted without license from IHS
Not for Resale

or terminal or groups of the same may be tested at one time.

5.7.3.3 *Tests on Assembled Apparatus.* In the case of assembled equipment, the test shall be made without removing any component part, and the test voltage shall be determined by the lowest rated voltage of any component part. The limiting radio influence voltage shall be identical with the highest value fixed for any of the component parts which determine the test voltage.

5.7.3.4 *Precautions.* The following precautions shall be observed when making radio influence tests:

(1) The capacitor switch should be approximately the same temperature as the room in which the tests are made.

(2) The capacitor switch should be dry and clean.

(3) The capacitor switch should not have been subjected to dielectric tests within two hours prior to the radio influence voltage tests.

(4) In some cases it may be found that the radio influence voltage falls off after the 60 Hz voltage has been applied for a short time. In such cases, it may be desirable to pre-excite the capacitor switch at normal operating voltage for a period not exceeding five minutes before proceeding with the tests.

5.8 Mechanical Life Tests. Capacitor switches shall be capable of the following number of operations when tested at no load:

(1) Distribution class capacitor switches 10 000 operations.

(2) Power class capacitor switches 2500 operations.

5.9 Control Wiring Tests. Control wiring of capacitor switches shall be capable of withstanding a 60 Hz one-minute dielectric test of 1500 volts to ground.

6. Production Tests

Production tests, made on every device or representative sample, shall include:

(1) The one-minute dry withstand low-frequency test (see 5.2.1)

(2) Control wiring check tests

(3) Manual operation

(4) Electrical operation

(5) Dielectric tests on control wiring (see 5.9)

7. Conformance Tests

If conformance tests are required by the purchaser, they shall be made in accordance with this standard.

8. Construction Requirements

8.1 Grounding Provision. A capacitor switch having a metal housing shall have provision for the connection of a ground lead.

8.2 Manual Operating Provision

8.2.1 Distribution capacitor switches shall have provision for manual operation by means of a hook stick. (See § note to Table 1.)

8.2.2 Power capacitor switches shall have provision for manual tripping by means of a hook stick, but not necessarily closing. (See § note to Table 1.)

8.3 Mounting Provisions

8.3.1 Distribution capacitor switches shall have provision for pole or crossarm or substation mounting, or both.

8.3.2 Power capacitor switches shall have provision for crossarm or substation mounting, or both.

8.4 Position Indicator. A capacitor switch shall be provided with a position indicator which clearly indicates the closed or open position. Its position shall be visible from the ground.

8.5 Nameplate Marking. The following minimum information shall be given on the nameplate:

(1) Manufacturer's name or trademark.

(2) Manufacturer's type or identification number to indicate the design or construction period. Changes in operating characteristic, design or construction which affect its application or service shall be accompanied by a change in the identification data.

(3) Rated maximum voltage.

(4) Rated continuous current.

(5) Rated capacitive switching current.

(6) Rated impulse withstand voltage.

(7) Rated control voltage and range.

Copyright The Institute of Electrical and Electronics Engineers, Inc.
Provided by IHS under license with IEEE
No reproduction or networking permitted without license from IHS
Not for Resale

9. Revision of American National Standards Referred to in This Document

When the following American National Standards are superseded by a revision approved by the American National Standards Institute, Inc, the revision shall apply:

American National Standard Methods for Determining the Values of a Sinusoidal Current Wave and Normal-Frequency Recovery Voltage for AC High-Voltage Circuit Breakers, C37.05-1964 (Reaffirmed 1969)

American National Standard Techniques for Dielectric Tests, C68.1-1968 (IEEE No. 4)

American National Standard Wet Tests, C77.1-1943 (Reaffirmed 1953)

American National Standard Definitions for Power Switchgear, C37.100-1966

Copyright The Institute of Electrical and Electronics Engineers, Inc.
Provided by IHS under license with IEEE
No reproduction or networking permitted without license from IHS
Not for Resale

Copyright The Institute of Electrical and Electronics Engineers, Inc.
Provided by IHS under license with IEEE
No reproduction or networking permitted without license from IHS

Not for Resale

Copyright The Institute of Electrical and Electronics Engineers, Inc.
Provided by IHS under license with IEEE
No reproduction or networking permitted without license from IHS

Not for Resale

Related American National Standards in the C37 Series

ANSI/IEEE C37.04-1979 Rating Structure for AC High-Voltage Circuit Breakers Rated on a Symmetrical Current Basis (including Supplements C37.04a-1964, C37.04b-1970, and C37.04c)

ANSI C37.06-1979 Preferred Ratings and Related Required Capabilities for AC High-Voltage Circuit Breakers Rated on a Symmetrical Current Basis

ANSI/IEEE C37.09-1979 Test Procedure for AC High-Voltage Circuit Breakers Rated on a Symmetrical Current Basis

ANSI/IEEE C37.010-1979 Application Guide for AC High-Voltage Circuit Breakers Rated on a Symmetrical Current Basis

ANSI/IEEE C37.011-1979 Application Guide for Transient Recovery Voltage for AC High-Voltage Circuit Breakers Rated on a Symmetrical Current Basis

ANSI/IEEE C37.012-1979 Application Guide for Capacitance Current Switching of AC High-Voltage Circuit Breakers Rated on a Symmetrical Current Basis

ANSI/IEEE C37.1-1979 Definition, Specification, and Analysis of Manual, Automatic, and Supervisory Station Control and Data Acquisition

ANSI/IEEE C37.2-1979 Electrical Power System Device Function Numbers

ANSI C37.4-1953 (R1976) Definitions and Rating Structure for AC High-Voltage Circuit Breakers Rated on a Total Current Basis (including Supplements C37.4a-1958, C37.4b-1970, and C37.4c-1980)

ANSI/IEEE C37.5-1979 Guide for Calculation of Fault Currents for Application of AC High-Voltage Circuit Breakers Rated on a Total Current Basis

ANSI C37.6-1971 (R1976) Schedules of Preferred Ratings for AC High-Voltage Circuit Breakers Rated on a Total Current Basis

ANSI C37.7-1960 (R1976) Interrupting Rating Factors for Reclosing Service for AC High-Voltage Circuit Breakers Rated on a Total Current Basis

ANSI C37.9-1953 (R1976) Test Code for AC High-Voltage Circuit Breakers Rated on a Total Current Basis (including Supplement C37.9a-1970)

ANSI C37.11-1979 Requirements for Electrical Control for AC High-Voltage Circuit Breakers Rated on a Symmetrical Current Basis or a Total Current Basis

ANSI C37.12-1981 Guide to Specifications for AC High-Voltage Circuit Breakers Rated on a Symmetrical Current Basis and a Total Current Basis

ANSI/IEEE C37.13-1981 Low-Voltage AC Power Circuit Breakers Used in Enclosures

ANSI/IEEE C37.14-1979 Low-Voltage DC Power Circuit Breakers Used in Enclosures

ANSI C37.16-1980 Preferred Ratings, Related Requirements, and Application Recommendations for Low-Voltage Power Circuit Breakers and AC Power Circuit Protectors

ANSI C37.17-1979 Trip Devices for AC and General-Purpose DC Low-Voltage Power Circuit Breakers

ANSI/IEEE C37.18-1979 Field Discharge Circuit Breakers Used in Enclosures for Rotating Electric Machinery

ANSI/IEEE C37.20-1974 Switchgear Assemblies Including Metal-Enclosed Bus (including Supplements C37.20a-1970, C37.20b-1972, and C37.20c-1974; Supplement C37.20d-1978 available separately)

ANSI/IEEE C37.23-1970 (R1976) Guide for Calculating Losses in Isolated-Phase Bus

ANSI/IEEE C37.24-1971 (R1976) Guide for Evaluating the Effect of Solar Radiation on Outdoor Metal-Clad Switchgear

ANSI/IEEE C37.26-1972 (R1977) Methods of Power Factor Measurements for Low-Voltage Inductive Test Circuits

ANSI/IEEE C37.27-1972 Application Guide for Low-Voltage AC Non-Integrally Fused Power Circuit Breakers (Using Separately Mounted Current-Limiting Fuses)

ANSI/IEEE C37.29-1981 Low-Voltage AC Power Circuit Protectors Used in Enclosures

ANSI/IEEE C37.30-1971 Definitions and Requirements for High-Voltage Air Switches, Insulators, and Bus Supports (including Supplements C37.30a-1975 and C37.30g-1980)

ANSI C37.31-1962 (R1976) Electrical and Mechanical Characteristics of Indoor Apparatus Insulators

ANSI C37.32-1972 Schedules of Preferred Ratings, Manufacturing Specifications, and Application Guide for High-Voltage Air Switches, Bus Supports, and Switch Accessories

ANSI C37.33-1970 (R1976) Rated Control Voltages and Their Ranges for High-Voltage Air Switches

ANSI/IEEE C37.34-1971 (R1977) Test Code for High-Voltage Air Switches (including Supplement C37.34a-1975)

ANSI C37.35-1976 Guide for the Application, Installation, Operation, and Maintenance of High-Voltage Air Disconnecting and Load Interrupter Switches

ANSI/IEEE C37.37-1979 Loading Guide for AC High-Voltage Air Switches (In Excess of 1000 Volts)

ANSI C37.40-1981 Service Conditions and Definitions for High Voltage Fuses, Distribution Enclosed Single-Pole Air Switches, Fuse Disconnecting Switches, and Accessories

ANSI C37.41-1981 Design Tests for High Voltage Fuses, Distribution Enclosed Single-Pole Air Switches, Fuse Disconnecting Switches, and Accessories

ANSI C37.42-1981 Specifications for Distribution Cutouts and Fuse Links

ANSI C37.43-1969 (R1974) Specifications for Distribution Fuse Links for Use in Distribution Enclosed, Open, and Open-Link Cutouts.

ANSI C37.44-1981 Specifications for Distribution Oil Cutouts and Fuse Links

ANSI C37.45-1981 Specifications for Distribution Enclosed Single-Pole Air Switches

ANSI C37.46-1981 Specifications for Power Fuses and Fuse Disconnecting Switches

ANSI C37.47-1981 Specifications for Distribution Fuse Disconnecting Switches, Fuse Supports, and Current-Limiting Fuses

ANSI C37.48-1969 (R1974) Guide for Application, Operation, and Maintenance of Distribution Cutouts and Fuse Links, Secondary Fuses, Distribution Enclosed Single-Pole Air Switches, Power Fuses, Fuse Disconnecting Switches, and Accessories

ANSI C37.50-1981 Test Procedures for Low-Voltage AC Power Circuit Breakers Used in Enclosures

ANSI C37.51-1979 Conformance Testing of Metal-Enclosed Low-Voltage AC Power Circuit Breaker Switchgear Assemblies

ANSI C37.52-1974 (R1980) Test Procedures for Low-Voltage AC Power Circuit Protectors Used in Enclosures

ANSI/IEEE C37.60-1981 Overhead, Pad-Mounted, Dry Vault and Submersible Automatic Circuit Reclosers and Fault Interrupters for Alternating-Current Systems

ANSI/IEEE C37.61-1973 (R1979) Guide for the Application, Operation, and Maintenance of Automatic Circuit Reclosers

ANSI C37.63-1969 (R1974) Requirements for Automatic Line Sectionalizers for Alternating-Current Systems (including Supplement C37.63a-1973)

ANSI C37.66-1969 (R1974) Requirements for Oil-Filled Capacitor Switches for Alternating-Current Systems

ANSI C37.85-1972 (R1978) Safety Requirements for X-Radiation Limits for AC High-Voltage Power Vacuum Interrupters Used in Power Switchgear (including Supplement C37.85a-1972)

ANSI/IEEE C37.90-1978 Relays and Relay Systems Associated with Electric Power Apparatus

ANSI C37.90a-1974 (R1980) Guide for Surge Withstand Capability (SWC) Tests

ANSI/IEEE C37.91-1972 (R1980) Guide for Protective Relay Applications to Power Transformers

ANSI/IEEE C37.93-1976 Guide for Protective Relay Applications of Audio Tones over Telephone Channels

ANSI/IEEE C37.95-1974 (R1980) Guide for Protective Relaying of Utility-Consumer Interconnections

ANSI/IEEE C37.96-1975 Guide for AC Motor Protection

ANSI/IEEE C37.97-1979 Guide for Protective Relay Applications to Power System Buses

ANSI/IEEE C37.98-1978 Seismic Testing of Relays

ANSI/IEEE C37.99-1980 Guide for Protection of Shunt Capacitor Banks

---

ANSI C37.100-1981 Definitions for Power Switchgear

April 1982

Copyright The Institute of Electrical and Electronics Engineers, Inc.
Provided by IHS under license with IEEE
No reproduction or networking permitted without license from IHS
Not for Resale