IEEE Std C37.60™-2003/Cor 1-2004
(Corrigendum to
IEEE Std C37.60-2003)

IEEE Standards

C37.60™ Corrigendum

IEEE Standard Requirements for Overhead, Pad-Mounted, Dry Vault, and Submersible Automatic Circuit Reclosers and Fault Interrupters for Alternating Current Systems up to 38 kV—Corrigendum 1

IEEE Power Engineering Society

Sponsored by the
Switchgear Committee

IEEE

3 Park Avenue, New York, NY 10016-5997, USA

8 April 2005

Print: SH95284
PDF: SS95284

Copyright The Institute of Electrical and Electronics Engineers, Inc.
Provided by IHS under license with IEEE
No reproduction or networking permitted without license from IHS

Not for Resale

Copyright The Institute of Electrical and Electronics Engineers, Inc.
Provided by IHS under license with IEEE
No reproduction or networking permitted without license from IHS

Not for Resale

IEEE Std C37.60™-2003/Cor 1-2004
(Corrigendum to
IEEE Std C37.60-2003)

IEEE Standard Requirements for Overhead, Pad-Mounted, Dry Vault, and Submersible Automatic Circuit Reclosers and Fault Interrupters for Alternating Current Systems up to 38 kV—Corrigendum 1

Sponsor

Switchgear Committee
of the
IEEE Power Engineering Society

Approved 23 September 2004

IEEE-SA Standards Board

Abstract: Required definitions, ratings, procedures for performing design tests, production tests, and construction requirements for overhead, pad-mounted, dry vault, and submersible automatic circuit reclosers and fault interrupters for alternating systems up to 38 kV are specified.
Keywords: dry vault, fault interrupter, overhead, pad-mounted, recloser, submersible, standard operating duty, switchgear

---

The Institute of Electrical and Electronics Engineers, Inc.
3 Park Avenue, New York, NY 10016-5997, USA

Copyright © 2005 by the Institute of Electrical and Electronics Engineers, Inc.
All rights reserved. Published 8 April 2005. Printed in the United States of America.

IEEE is a registered trademark in the U.S. Patent & Trademark Office, owned by the Institute of Electrical and Electronics Engineers, Incorporated.

Print: ISBN 0-7381-4504-1 SH95284
PDF: ISBN 0-7381-4505-X SS95284

No part of this publication may be reproduced in any form, in an electronic retrieval system or otherwise, without the prior written permission of the publisher.

Copyright The Institute of Electrical and Electronics Engineers, Inc.
Provided by IHS under license with IEEE
No reproduction or networking permitted without license from IHS
Not for Resale

IEEE Standards documents are developed within the IEEE Societies and the Standards Coordinating Committees of the IEEE Standards Association (IEEE-SA) Standards Board. The IEEE develops its standards through a consensus development process, approved by the American National Standards Institute, which brings together volunteers representing varied viewpoints and interests to achieve the final product. Volunteers are not necessarily members of the Institute and serve without compensation. While the IEEE administers the process and establishes rules to promote fairness in the consensus development process, the IEEE does not independently evaluate, test, or verify the accuracy of any of the information contained in its standards.

Use of an IEEE Standard is wholly voluntary. The IEEE disclaims liability for any personal injury, property or other damage, of any nature whatsoever, whether special, indirect, consequential, or compensatory, directly or indirectly resulting from the publication, use of, or reliance upon this, or any other IEEE Standard document.

The IEEE does not warrant or represent the accuracy or content of the material contained herein, and expressly disclaims any express or implied warranty, including any implied warranty of merchantability or fitness for a specific purpose, or that the use of the material contained herein is free from patent infringement. IEEE Standards documents are supplied "**AS IS**."

The existence of an IEEE Standard does not imply that there are no other ways to produce, test, measure, purchase, market, or provide other goods and services related to the scope of the IEEE Standard. Furthermore, the viewpoint expressed at the time a standard is approved and issued is subject to change brought about through developments in the state of the art and comments received from users of the standard. Every IEEE Standard is subjected to review at least every five years for revision or reaffirmation. When a document is more than five years old and has not been reaffirmed, it is reasonable to conclude that its contents, although still of some value, do not wholly reflect the present state of the art. Users are cautioned to check to determine that they have the latest edition of any IEEE Standard.

In publishing and making this document available, the IEEE is not suggesting or rendering professional or other services for, or on behalf of, any person or entity. Nor is the IEEE undertaking to perform any duty owed by any other person or entity to another. Any person utilizing this, and any other IEEE Standards document, should rely upon the advice of a competent professional in determining the exercise of reasonable care in any given circumstances.

lnterpretations: Occasionally questions may arise regarding the meaning of portions of standards as they relate to specific applications. When the need for interpretations is brought to the attention of IEEE, the Institute will initiate action to prepare appropriate responses. Since IEEE Standards represent a consensus of concerned interests, it is important to ensure that any interpretation has also received the concurrence of a balance of interests. For this reason, IEEE and the members of its societies and Standards Coordinating Committees are not able to provide an instant response to interpretation requests except in those cases where the matter has previously received formal consideration. At lectures, symposia, seminars, or educational courses, an individual presenting information on IEEE standards shall make it clear that his or her views should be considered the personal views of that individual rather than the formal position, explanation, or interpretation of the IEEE.

Comments for revision of IEEE Standards are welcome from any interested party, regardless of membership affiliation with IEEE. Suggestions for changes in documents should be in the form of a proposed change of text, together with appropriate supporting comments. Comments on standards and requests for interpretations should be addressed to:

Secretary, IEEE-SA Standards Board

445 Hoes Lane

Piscataway, NJ 08854

USA

NOTE—Attention is called to the possibility that implementation of this standard may require use of subject matter covered by patent rights. By publication of this standard, no position is taken with respect to the existence or validity of any patent rights in connection therewith. The IEEE shall not be responsible for identifying patents for which a license may be required by an IEEE standard or for conducting inquiries into the legal validity or scope of those patents that are brought to its attention.

Authorization to photocopy portions of any individual standard for internal or personal use is granted by the Institute of Electrical and Electronics Engineers, Inc., provided that the appropriate fee is paid to Copyright Clearance Center. To arrange for payment of licensing fee, please contact Copyright Clearance Center, Customer Service, 222 Rosewood Drive, Danvers, MA 01923 USA; +1 978 750 8400. Permission to photocopy portions of any individual standard for educational classroom use can also be obtained through the Copyright Clearance Center.

Copyright The Institute of Electrical and Electronics Engineers, Inc.
Provided by IHS under license with IEEE
No reproduction or networking permitted without license from IHS
Not for Resale

Introduction

This introduction in not part of IEEE Std C37.60™-2003/Cor 1-2004, IEEE Standard Requirements for Overhead, Pad Mounted, Dry Vault, and Submersible Automatic Circuit Reclosers and Fault Interrupters for Alternating Current Systems up to 38 kV—Corrigendum 1.

This Corrigendum to IEEE Std C37.60-2003 includes both technical and editorial corrections to the original document.

In Table 7 the changes are editorial to conform to the IEEE Style Manual. No substantive changes were made.

In Tables 10a, 10b, 10c, and 10d, editorial changes in the units row. No substantive changes are made.

In Tables 10e and 10f, the values for time t3 and Rate of rise U_c / t_3 were changed by approximately 4.5% for the three lines pertaining to the 27 kV rating only.

Also in Tables 10e and 10f, the definitions for k_{af} (T50), k_{af} (T20), and RRRV(T50) and RRRV(T20) were corrected to match the numbers in the tables. The matching numbers themselves were not changed.

In Annex A, Equation A.1 for instantaneous current was corrected. The definitions for the angles φ and θ were changed to agree with traditional usage and signs were corrected.

In Annex B, Figure B.1 was changed and simplified.

Notice to users

Errata

Errata, if any, for this and all other standards can be accessed at the following URL: http://standards.ieee.org/reading/ieee/updates/errata/index.html. Users are encouraged to check this URL for errata periodically.

Interpretations

Current interpretations can be accessed at the following URL: http://standards.ieee.org/reading/ieee/interp/index.html.

Patents

Attention is called to the possibility that implementation of this standard may require use of subject matter covered by patent rights. By publication of this standard, no position is taken with respect to the existence or validity of any patent rights in connection therewith. The IEEE shall not be responsible for identifying patents or patent applications for which a license may be required to implement an IEEE standard or for conducting inquiries into the legal validity or scope of those patents that are brought to its attention.

Copyright © 2005 IEEE. All rights reserved.

Copyright The Institute of Electrical and Electronics Engineers, Inc.
Provided by IHS under license with IEEE
No reproduction or networking permitted without license from IHS

Not for Resale

Participants

At the time this corrigendum was completed, the working group had the following membership:

David Stone, *Chair*

Chuck Ball
Bob J. Behl
Raymond Capra
Marcel Fortin
Edward M. Jankowich
Kirkland Smith
Francois Soulard
Edward Steel
John Wood
Jan Zawadzki

The following members of the individual balloting committee voted on this corrigendum. Balloters may have voted for approval, disapproval, or abstention.

Chris Ambrose
Wallace Binder
Lyne Brisson
Ted Burse
Raymond Capra
Tommy Cooper
Randall Dotson
Dana Dufield
Denis Dufournet
Amir El-Sheikh
Rabiz Foda
Marcel Fortin
Fredric Friend
Mietek Glinkowski
Manuel Gonzalez
Ian Harvey
Richard Jackson
Edward M. Jankowich
Joseph Koepfinger
John Leach
George N. Lester
Franco Lo Monaco
Donald Martin
G Michel
Frank Muench
Miklos Orosz
Michael Roberts
Timothy Royster
Devki Sharma
James E. Smith
John G. St. Clair
David Stone
Stanton Telander
John Vandermaar
Elbert Worland
Tom Wandeloski
James Wilson
Steve Whalen

When the IEEE-SA Standards Board approved this standard on 23 September 2004, it had the following membership:

Don Wright, *Chair*
Steve M. Mills, *Vice Chair*
Judith Gorman, *Secretary*

Chuck Adams
Stephen Berger
Mark D. Bowman
Joseph A. Bruder
Bob Davis
Roberto de Marca Boisson
Julian Forster*
Arnold M. Greenspan
Mark S. Halpin
Raymond Hapeman
Richard J. Holleman
Richard H. Hulett
Lowell G. Johnson
Joseph L. Koepfinger*
Hermann Koch
Thomas J. McGean
Daleep C. Mohla
Paul Nikolich
T. W. Olsen
Ronald C. Petersen
Gary S. Robinson
Frank Stone
Malcolm V. Thaden
Doug Topping
Joe D. Watson

*Member Emeritus

Also included are the following non-voting IEEE-SA Standards Board liaisons:

Satish K. Aggarwal, *NRC Representative*
Richard DeBlasio, *DOE Representative*
Alan Cookson, *NIST Representative*

Michael D. Fisher
IEEE Standards Project Editor

Copyright The Institute of Electrical and Electronics Engineers, Inc.
Provided by IHS under license with IEEE
No reproduction or networking permitted without license from IHS
Copyright © 2005 IEEE. All rights reserved.
Not for Resale

Contents

5. Rating 2

5.9 Rated control voltage and ranges 2

6. Design tests (type tests) 3

6.5 Rated symmetrical interrupting current tests 3

Annex A (informative) *X*/*R* ratios 9

A.2 Asymmetrical Fault Current 9

Annex B (informative) Simulated surge arrester operation test 10

Copyright © 2005 IEEE. All rights reserved.

Copyright The Institute of Electrical and Electronics Engineers, Inc.
Provided by IHS under license with IEEE
No reproduction or networking permitted without license from IHS

Not for Resale

Copyright The Institute of Electrical and Electronics Engineers, Inc.
Provided by IHS under license with IEEE
No reproduction or networking permitted without license from IHS

Not for Resale

IEEE Standard Requirements for Overhead, Pad-Mounted, Dry Vault, and Submersible Automatic Circuit Reclosers and Fault Interrupters for Alternating Current Systems up to 38 kV—Corrigendum 1

This corrigendum is based on the current edition of IEEE Std C37.60-2003.

NOTE—The editing instructions contained in this corrigendum define how to merge the material contained therein into the existing base standard and its amendments to form the comprehensive standard.

The editing instructions are shown in ***bold italic.*** Three editing instructions are used: change, delete, and replace. ***Change*** is used to make corrections in existing text or tables. The editing instruction specifies the location of the change and describes what is being changed by using ~~strikethrough~~ (to remove old material) and underscore (to add new material). ***Delete*** removes existing material. ***Replace*** is used to make changes in figures or equations by removing the existing figure or equation and replacing it with a new one. Editorial notes will not be carried over into future editions because the changes will be incorporated into the base standard.

Copyright © 2005 IEEE. All rights reserved.

Copyright The Institute of Electrical and Electronics Engineers, Inc.
Provided by IHS under license with IEEE
No reproduction or networking permitted without license from IHS

Not for Resale

5. Rating

5.9 Rated control voltage and ranges

Change Table 7 as shown:

Table 7—Preferred rated control voltage and ranges

Direct current (Note 1), control voltage ranges (Notes 4 and 5)		
Nominal Voltage	**Closing and Auxiliary Functions**	**Tripping Function**
24 (Note 2)	—	14–28 (Note 6)
48 (Note 2)	38–56	28–56 (Note 6)
125	100–140	70–140
250	200–280	140–280
Alternating current control voltage ranges (Notes 3, 4, and 5)		
Nominal voltage ~~(50/60 Hz)~~ (50 Hz or 60 Hz) single phase	**Closing, tripping and auxiliary functions**	
120	104–127 ~~(3)~~ (Note 3)	
240	208–254 ~~(3)~~ (Note 3)	
480	416–508 ~~(3)~~ (Note 3)	
Polyphase		
~~208Y/120~~ 208 (Wye)/120	~~180Y/104 – 220Y/127~~ 180 (Wye)/104–220 (Wye)/127	
240	208–254	
480	416–508	
~~480Y/277~~ 480 (Wye)/277	~~416Y/240 – 508Y/292~~ 416 (Wye)/240–508 (Wye)/292	

Copyright © 2005 IEEE. All rights reserved.

Copyright The Institute of Electrical and Electronics Engineers, Inc.
Provided by IHS under license with IEEE
No reproduction or networking permitted without license from IHS
Not for Resale

6. Design tests (type tests)

6.5 Rated symmetrical interrupting current tests

Change Table 10a, Table 10b, Table 10c, Table 10d, Table 10e, and Table 10f as shown:

Table 10 a)—Standard values of prospective transient recovery voltage representation by two parameters for <u>three-phase</u> reclosers with rated fault currents > 4000 A rms in overhead line connected circuits

Rated voltage	Test-duty	First-pole-to-clear factor	Amplitude factor	TRV peak value	Time	Time delay	Voltage	Time	Rate of rise
U_r		k_{pp}	k_{af}	U_c	t_3	t_d	u'	t'	U_c/t_3
(kV)		~~(p.u.)~~	~~(p.u.)~~	(kV)	(μs)	(μs)	(kV)	(μs)	(kV/μs)
12	T100	1.5	1.54	22.6	29.4	4	7.5	14	0.77
12	T50	1.5	1.68	24.7	17.0	3	8.2	8	1.45
12	T20	1.5	1.77	26.0	11.8	2	8.7	6	2.21
15.5	T100	1.5	1.54	29.2	33.2	5	9.7	16	0.88
15.5	T50	1.5	1.68	31.9	19.3	3	10.6	9	1.65
15.5	T20	1.5	1.77	33.6	13.3	2	11.2	6	2.53
17.5	T100	1.5	1.54	33.0	35.1	5	11.0	17	0.94
17.5	T50	1.5	1.68	36.0	20.4	3	12.0	10	1.77
17.5	T20	1.5	1.77	38.0	14.1	2	12.7	7	2.70
24	T100	1.5	1.54	45.3	41.5	6	15.1	20	1.09
24	T50	1.5	1.68	49.3	24.1	4	16.4	12	2.05
24	T20	1.5	1.77	52.1	16.6	2	17.4	8	3.13
27	T100	1.5	1.54	50.9	44.7	7	17.0	22	1.14
27	T50	1.5	1.68	55.5	25.9	4	18.5	13	2.14
27	T20	1.5	1.77	58.6	17.9	3	19.5	9	3.27
36	T100	1.5	1.54	67.9	53.5	8	22.6	26	1.27
36	T50	1.5	1.68	74.0	31.0	5	24.7	15	2.39
36	T20	1.5	1.77	78.1	21.4	3	26.0	10	3.64
38	T100	1.5	1.54	71.7	55.4	8	23.9	27	1.29
38	T50	1.5	1.68	78.1	32.2	5	26.0	16	2.43
38	T20	1.5	1.77	82.4	22.3	3	27.5	11	3.70

SPECIFIED VALUES in the TABLE	CALCULATED VALUES in the TABLE	
U_r = Rated Voltage	U_c =	TRV peak value
k_{pp} = First-pole-to-clear factor = 1.5	U_c =	$k_{pp} \times k_{af} \times$ sqrt(2/3) $\times U_r$
k_{af} = Amplitude factor	U_c =	$k_{pp} \times k_{af} \times 0.8165 \times U_r$
k_{af} (T100) = Specified = 1.54	t_3 =	Time to Uc
k_{af} (T50) = k_{af} (T100) × 1.09 = 1.68	t_3 =	Uc / RRRV
k_{af} (T20) = k_{af} (T100) × 1.15 = 1.77	t_d =	Time delay for the delay line
RRRV = Rate of Rise of Recovery Voltage	t_d =	$0.15 \times t_3$
RRRV(T100) = Specified	u' =	Voltage point for the delay line
RRRV(T50) = RRRV(T100) × 1.88	u' =	U_c / 3
RRRV(T20) = RRRV(T100) × 2.87	t' =	Time to u'
NOTE—The TRV values are calculated for ungrounded systems and cover grounded systems as well.[1]	t' =	$t_d + u'$ / RRRV

[1] Notes in text, tables, and figures are given for information only, and do not contain requirements needed to implement the standard.

Copyright The Institute of Electrical and Electronics Engineers, Inc.
Provided by IHS under license with IEEE
No reproduction or networking permitted without license from IHS
Copyright © 2005 IEEE. All rights reserved.
Not for Resale

Table 10 b)—Standard values of prospective transient recovery voltage representation by two parameters for single-phase reclosers with rated fault currents > 4000 A rms in overhead line connected circuits

Rated voltage	Test-duty	First-pole-to-clear factor	Amplitude factor	TRV peak value	Time	Time delay	Voltage	Time	Rate of rise
U_r		k_{pp}	k_{af}	U_c	t_3	t_d	u'	t'	U_c/t_3
(kV)		~~(p.u.)~~	~~(p.u.)~~	(kV)	(μs)	(μs)	(kV)	(μs)	(kV/μs)
12	T100	1.732	1.54	26.1	33.9	5	8.7	16	0.77
12	T50	1.732	1.68	28.5	19.7	3	9.5	10	1.45
12	T20	1.732	1.77	30.1	13.6	2	10.0	7	2.21
15.5	T100	1.732	1.54	33.8	38.4	6	11.3	19	0.88
15.5	T50	1.732	1.68	36.8	22.2	3	12.3	11	1.65
15.5	T20	1.732	1.77	38.8	15.4	2	12.9	7	2.53
17.5	T100	1.732	1.54	38.1	40.5	6	12.7	20	0.94
17.5	T50	1.732	1.68	41.5	23.5	4	13.8	11	1.77
17.5	T20	1.732	1.77	43.8	16.2	2	14.6	8	2.70
24	T100	1.732	1.54	52.3	48.0	7	17.4	23	1.09
24	T50	1.732	1.68	57.0	27.8	4	19.0	13	2.05
24	T20	1.732	1.77	60.1	19.2	3	20.0	9	3.13
27	T100	1.732	1.54	58.8	51.6	8	19.6	25	1.14
27	T50	1.732	1.68	64.1	29.9	4	21.4	14	2.14
27	T20	1.732	1.77	67.6	20.7	3	22.5	10	3.27
36	T100	1.732	1.54	78.4	61.7	9	26.1	30	1.27
36	T50	1.732	1.68	85.5	35.8	5	28.5	17	2.39
36	T20	1.732	1.77	90.2	24.7	4	30.1	12	3.64
38	T100	1.732	1.54	82.8	64.2	10	27.6	31	1.29
38	T50	1.732	1.68	90.2	37.2	6	30.1	18	2.43
38	T20	1.732	1.77	95.2	25.7	4	31.7	12	3.70

SPECIFIED VALUES in the TABLE	CALCULATED VALUES in the TABLE	
U_r = Rated Voltage	U_c =	TRV peak value
k_{pp} = First-pole-to-clear factor = 1.732	U_c =	$k_{pp} \times k_{af} \times \text{sqrt}(2/3) \times U_r$
k_{af} = Amplitude factor	U_c =	$k_{pp} \times k_{af} \times 0.8165 \times U_r$
k_{af} (T100) = Specified = 1.54	t_3 =	Time to Uc
k_{af} (T50) = k_{af} (T100) × 1.09 = 1.68	t_3 =	Uc / RRRV
k_{af} (T20) = k_{af} (T100) × 1.15 = 1.77	t_d =	Time delay for the delay line
RRRV = Rate of Rise of Recovery Voltage	t_d =	0.15 × t_3
RRRV(T100) = Specified	u' =	Voltage point for the delay line
RRRV(T50) = RRRV(T100) × 1.88	u' =	U_c / 3
RRRV(T20) = RRRV(T100) × 2.87	t' =	Time to u'
NOTE—The TRV values are calculated for ungrounded systems and cover grounded systems as well.	t' =	$t_d + u'$ / RRRV

Copyright The Institute of Electrical and Electronics Engineers, Inc.
Provided by IHS under license with IEEE
No reproduction or networking permitted without license from IHS
Copyright © 2005 IEEE. All rights reserved.
Not for Resale

Table 10 c)—Standard values of prospective transient recovery voltage representation by two parameters for three-phase reclosers with rated fault currents > 4000 A rms in cable connected systems

Rated voltage	Test-duty	First-pole-to-clear factor	Amplitude factor	TRV peak value	Time	Time delay	Voltage	Time	Rate of rise
U_r		k_{pp}	k_{af}	U_c	t_3	t_d	u'	t'	U_c/t_3
(kV)		~~(p.u.)~~	~~(p.u.)~~	(kV)	(μs)	(μs)	(kV)	(μs)	(kV/μs)
12	T100	1.5	1.54	22.6	59.6	9	7.5	29	0.38
12	T50	1.5	1.68	24.7	34.5	5	8.2	17	0.71
12	T20	1.5	1.77	26.0	23.9	4	8.7	12	1.09
15.5	T100	1.5	1.54	29.2	66.4	10	9.7	32	0.44
15.5	T50	1.5	1.68	31.9	38.5	6	10.6	19	0.83
15.5	T20	1.5	1.77	33.6	26.6	4	11.2	13	1.26
17.5	T100	1.5	1.54	33.0	70.2	11	11.0	34	0.47
17.5	T50	1.5	1.68	36.0	40.7	6	12.0	20	0.88
17.5	T20	1.5	1.77	38.0	28.1	4	12.7	14	1.35
24	T100	1.5	1.54	45.3	83.8	13	15.1	41	0.54
24	T50	1.5	1.68	49.3	48.6	7	16.4	23	1.02
24	T20	1.5	1.77	52.1	33.6	5	17.4	16	1.55
27	T100	1.5	1.54	50.9	89.3	13	17.0	43	0.57
27	T50	1.5	1.68	55.5	51.8	8	18.5	25	1.07
27	T20	1.5	1.77	58.6	35.8	5	19.5	17	1.64
36	T100	1.5	1.54	67.9	107.8	16	22.6	52	0.63
36	T50	1.5	1.68	74.0	62.5	9	24.7	30	1.18
36	T20	1.5	1.77	78.1	43.2	6	26.0	21	1.81
38	T100	1.5	1.54	71.7	110.3	17	23.9	53	0.65
38	T50	1.5	1.68	78.1	63.9	10	26.0	31	1.22
38	T20	1.5	1.77	82.4	44.2	7	27.5	21	1.87

SPECIFIED VALUES in the TABLE	CALCULATED VALUES in the TABLE	
U_r = Rated Voltage	U_c =	TRV peak value
k_{pp} = First-pole-to-clear factor = 1.5	U_c =	$k_{pp} \times k_{af} \times$ sqrt(2/3) $\times U_r$
k_{af} = Amplitude factor	U_c =	$k_{pp} \times k_{af} \times 0.8165 \times U_r$
k_{af} (T100) = Specified = 1.54	t_3 =	Time to Uc
k_{af} (T50) = k_{af} (T100) × 1.09 = 1.68	t_3 =	Uc / RRRV
k_{af} (T20) = k_{af} (T100) × 1.15 = 1.77	t_d =	Time delay for the delay line
RRRV = Rate of Rise of Recovery Voltage	t_d =	0.15 × t_3
RRRV(T100) = Specified = ½ × RRRV overhead lines	u' =	Voltage point for the delay line
RRRV(T50) = RRRV(T100) × 1.88	u' =	U_c / 3
RRRV(T20) = RRRV(T100) × 2.87	t' =	Time to u'
NOTE—The TRV values are calculated for ungrounded systems and cover grounded systems as well.	t' =	$t_d + u'$ / RRRV

Copyright The Institute of Electrical and Electronics Engineers, Inc.
Provided by IHS under license with IEEE
No reproduction or networking permitted without license from IHS
Copyright © 2005 IEEE. All rights reserved.
Not for Resale

Table 10 d)—Standard values of prospective transient recovery voltage representation by two parameters for single-phase reclosers with rated fault currents > 4000 A rms in cable connected systems

Rated voltage	Test-duty	First-pole-to-clear factor	Amplitude factor	TRV peak value	Time	Time delay	Voltage	Time	Rate of rise
U_r		k_{pp}	k_{af}	U_c	t_3	t_d	u'	t'	U_c/t_3
(kV)		~~(p.u.)~~	~~(p.u.)~~	(kV)	(μs)	(μs)	(kV)	(μs)	(kV/μs)
12	T100	1.732	1.54	26.1	68.8	10	8.7	33	0.38
12	T50	1.732	1.68	28.5	39.9	6	9.5	19	0.71
12	T20	1.732	1.77	30.1	27.6	4	10.0	13	1.09
15.5	T100	1.732	1.54	33.8	76.7	12	11.3	37	0.44
15.5	T50	1.732	1.68	36.8	44.5	7	12.3	21	0.83
15.5	T20	1.732	1.77	38.8	30.7	5	12.9	15	1.26
17.5	T100	1.732	1.54	38.1	81.1	12	12.7	39	0.47
17.5	T50	1.732	1.68	41.5	47.0	7	13.8	23	0.88
17.5	T20	1.732	1.77	43.8	32.5	5	14.6	16	1.35
24	T100	1.732	1.54	52.3	96.8	15	17.4	47	0.54
24	T50	1.732	1.68	57.0	56.1	8	19.0	27	1.02
24	T20	1.732	1.77	60.1	38.8	6	20.0	19	1.55
27	T100	1.732	1.54	58.8	103.2	15	19.6	50	0.57
27	T50	1.732	1.68	64.1	59.8	9	21.4	29	1.07
27	T20	1.732	1.77	67.6	41.3	6	22.5	20	1.64
36	T100	1.732	1.54	78.4	124.4	19	26.1	60	0.63
36	T50	1.732	1.68	85.5	72.2	11	28.5	35	1.18
36	T20	1.732	1.77	90.2	49.9	7	30.1	24	1.81
38	T100	1.732	1.54	82.8	127.3	19	27.6	62	0.65
38	T50	1.732	1.68	90.2	73.8	11	30.1	36	1.22
38	T20	1.732	1.77	95.2	51.0	8	31.7	25	1.87

SPECIFIED VALUES in the TABLE

U_r = Rated Voltage

k_{pp} = First-pole-to-clear factor = 1.732

k_{af} = Amplitude factor

k_{af} (T100) = Specified = 1.54

k_{af} (T50) = k_{af} (T100) × 1.09 = 1.68

k_{af} (T20) = k_{af} (T100) × 1.15 = 1.77

RRRV = Rate of rise of recovery voltage

RRRV(T100) = Specified = ½ × RRRV overhead lines

RRRV(T50) = RRRV(T100) × 1.88

RRRV(T20) = RRRV(T100) × 2.87

NOTE—The TRV values are calculated for ungrounded systems and cover grounded systems as well.

CALCULATED VALUES in the TABLE

U_c = TRV peak value

U_c = $k_{pp} \times k_{af} \times \text{sqrt}(2/3) \times U_r$

U_c = $k_{pp} \times k_{af} \times 0.8165 \times U_r$

t_3 = Time to Uc

t_3 = Uc / RRRV

t_d = Time delay for the delay line

t_d = $0.15 \times t_3$

u' = Voltage point for the delay line

u' = $U_c / 3$

t' = Time to u'

t' = $t_d + u' /$ RRRV

Copyright The Institute of Electrical and Electronics Engineers, Inc.
Provided by IHS under license with IEEE
No reproduction or networking permitted without license from IHS
Copyright © 2005 IEEE. All rights reserved.
Not for Resale

Table 10 e)—Standard values of prospective transient recovery voltage representation by two parameters for three-phase reclosers with rated fault currents ≤ 4000 A rms in both overhead and cable connected systems and three-phase fault interrupters of all interrupting ratings in cable connected systems

Rated voltage	Test-duty	First-pole-to-clear factor	Amplitude factor	TRV peak value	Time	Time delay	Voltage	Time	Rate of rise
U_r		k_{pp}	k_{af}	U_c	t_3	t_d	u'	t'	U_c/t_3
(kV)		~~(p.u.)~~	~~(p.u.)~~	(kV)	(μs)	(μs)	(kV)	(μs)	(kV/μs)
12	T100	1.5	1.54	22.6	117.6	18	7.5	57	0.193
12	T50	1.5	1.54	22.6	117.6	18	7.5	57	0.193
12	T20	1.5	1.54	22.6	117.6	18	7.5	57	0.193
15.5	T100	1.5	1.54	29.2	132.9	20	9.7	64	0.220
15.5	T50	1.5	1.54	29.2	132.9	20	9.7	64	0.220
15.5	T20	1.5	1.54	29.2	132.9	20	9.7	64	0.220
17.5	T100	1.5	1.54	33.0	140.5	21	11.0	68	0.235
17.5	T50	1.5	1.54	33.0	140.5	21	11.0	68	0.235
17.5	T20	1.5	1.54	33.0	140.5	21	11.0	68	0.235
24	T100	1.5	1.54	45.3	166.1	25	15.1	80	0.273
24	T50	1.5	1.54	45.3	166.1	25	15.1	80	0.273
24	T20	1.5	1.54	45.3	166.1	25	15.1	80	0.273
27	T100	1.5	1.54	50.9	~~186.9~~ 178.6	28	17.0	90	~~0.273~~ 0.285
27	T50	1.5	1.54	50.9	~~186.9~~ 178.6	28	17.0	90	~~0.273~~ 0.285
27	T20	1.5	1.54	50.9	~~186.9~~ 178.6	28	17.0	90	~~0.273~~ 0.285
36	T100	1.5	1.54	67.9	213.9	32	22.6	103	0.318
36	T50	1.5	1.54	67.9	213.9	32	22.6	103	0.318
36	T20	1.5	1.54	67.9	213.9	32	22.6	103	0.318
38	T100	1.5	1.54	71.7	222.2	33	23.9	107	0.323
38	T50	1.5	1.54	71.7	222.2	33	23.9	107	0.323
38	T20	1.5	1.54	71.7	222.2	33	23.9	107	0.323

SPECIFIED VALUES in the TABLE	CALCULATED VALUES in the TABLE	
U_r = Rated voltage	U_c =	TRV peak value
k_{pp} = First-pole-to-clear factor = 1.5	U_c =	$k_{pp} \times k_{af} \times$ sqrt(2/3) $\times U_r$
k_{af} = Amplitude factor	U_c =	$k_{pp} * k_{af} * 0.8165 \times U_r$
k_{af} (T100) = Specified = 1.54	t_3 =	Time to Uc
~~kaf(T50)= kaf(T100) x 1.09 = 1.68~~ k_{af} (T50) = Specified = 1.54	t_3 =	Uc / RRRV
~~kaf(T20)= kaf(T100) x 1.15 = 1.77~~ k_{af} (T20) = Specified = 1.54	t_d =	Time delay for the delay line
RRRV = Rate of rise of recovery voltage	t_d =	0.15 * t_3
RRRV(T100) = Specified = 1/4 × RRRV overhead lines	u' =	Voltage point for the delay line
~~RRRV(T50)= RRRV(T100) x 1.88~~ RRRV(T50) = RRRV(T100)	u' =	U_c / 3
~~RRRV(T20)= RRRV(T100) x 2.87~~ RRRV(T20) = RRRV(T100)	t' =	Time to u'
NOTE—The TRV values are calculated for ungrounded systems and cover grounded systems as well.	t' =	$t_d + u'$ / RRRV

Copyright The Institute of Electrical and Electronics Engineers, Inc.
Provided by IHS under license with IEEE
No reproduction or networking permitted without license from IHS
Copyright © 2005 IEEE. All rights reserved.
Not for Resale

Table 10 f)—Standard values of prospective transient recovery voltage representation by two parameters for single-phase reclosers with rated fault currents ≤ 4000 A rms in both overhead and cable connected systems and single-phase fault interrupters of all interrupting ratings in cable connected systems

Rated voltage	Test-duty	First-pole-to-clear factor	Amplitude factor	TRV peak value	Time	Time delay	Voltage	Time	Rate of rise
U_r		k_{pp}	k_{af}	U_c	t_3	t_d	u'	t'	U_c/t_3
(kV)				(kV)	(μs)	(μs)	(kV)	(μs)	(kV/μs)
12	T100	1.732	1.54	26.1	135.8	20	8.7	66	0.193
12	T50	1.732	1.54	26.1	135.8	20	8.7	66	0.193
12	T20	1.732	1.54	26.1	135.8	20	8.7	66	0.193
15.5	T100	1.732	1.54	33.8	153.4	23	11.3	74	0.220
15.5	T50	1.732	1.54	33.8	153.4	23	11.3	74	0.220
15.5	T20	1.732	1.54	33.8	153.4	23	11.3	74	0.220
17.5	T100	1.732	1.54	38.1	162.2	24	12.7	78	0.235
17.5	T50	1.732	1.54	38.1	162.2	24	12.7	78	0.235
17.5	T20	1.732	1.54	38.1	162.2	24	12.7	78	0.235
24	T100	1.732	1.54	52.3	191.8	29	17.4	93	0.273
24	T50	1.732	1.54	52.3	191.8	29	17.4	93	0.273
24	T20	1.732	1.54	52.3	191.8	29	17.4	93	0.273
27	T100	1.732	1.54	58.8	~~215.8~~ 206	32	19.6	104	~~0.273~~ 0.285
27	T50	1.732	1.54	58.8	~~215.8~~ 206	32	19.6	104	~~0.273~~ 0.285
27	T20	1.732	1.54	58.8	~~215.8~~ 206	32	19.6	104	~~0.273~~ 0.285
36	T100	1.732	1.54	78.4	246.9	37	26.1	119	0.318
36	T50	1.732	1.54	78.4	246.9	37	26.1	119	0.318
36	T20	1.732	1.54	78.4	246.9	37	26.1	119	0.318
38	T100	1.732	1.54	82.8	256.6	38	27.6	124	0.323
38	T50	1.732	1.54	82.8	256.6	38	27.6	124	0.323
38	T20	1.732	1.54	82.8	256.6	38	27.6	124	0.323

SPECIFIED VALUES in the TABLE	CALCULATED VALUES in the TABLE	
U_r = Rated Voltage	U_c =	TRV peak value
k_{pp} = First-pole-to-clear factor = ~~1.5~~ 1.732	U_c =	$k_{pp} \times k_{af} \times \text{sqrt}(2/3) \times U_r$
K_{af} = Amplitude factor	U_c =	$k_{pp} \times k_{af} \times 0.8165 \times U_r$
k_{af} (T100) = Specified = 1.54	t_3 =	Time to Uc
~~kaf(T50)= kaf(T100) x 1.09 = 1.68~~ k_{af} (T50) = Specified = 1.54	t_3 =	Uc / RRRV
~~kaf(T20)= kaf(T100) x 1.15 = 1.77~~ k_{af} (T20) = Specified = 1.54	t_d =	Time delay for the delay line
RRRV = Rate of rise of recovery voltage	t_d =	$0.15 \times t_3$
RRRV(T100) = Specified = 1/4 × RRRV overhead lines	u' =	Voltage point for the delay line
~~RRRV(T50)= RRRV(T100) x 1.88~~ RRRV(T50) = RRRV(T100)	u' =	U_c / 3
~~RRRV(T20)= RRRV(T100) x 2.87~~ RRRV(T20) = RRRV(T100)	t' =	Time to u'
NOTE—The TRV values are calculated for ungrounded systems and cover grounded systems as well.	t' =	$t_d + u'$ / RRRV

Copyright The Institute of Electrical and Electronics Engineers, Inc.
Provided by IHS under license with IEEE
No reproduction or networking permitted without license from IHS
Copyright © 2005 IEEE. All rights reserved.
Not for Resale

Annex A

(informative)

X/R ratios

A.2 Asymmetrical Fault Current

Replace Equation (A.1) and the variable list with the following:

$$i = \sqrt{2}I\left[\sin(\omega t + \theta - \phi) - \sin(\theta - \phi)e^{-t/\tau_{cc}}\right] \quad \text{(A.1)}$$

where

i is the instantaneous current
I is the rms value of the current
ω is the angular frequency ($2\pi f$)
ϕ is the circuit phase angle = $\tan^{-1}(X/R)$
θ is the angle between voltage zero and time that fault is initiated.
t is the time
τ_{cc} is the circuit time constant (L/R or $X/R\omega$) (see A.1)

Copyright The Institute of Electrical and Electronics Engineers, Inc.
Provided by IHS under license with IEEE
No reproduction or networking permitted without license from IHS
Copyright © 2005 IEEE. All rights reserved.
Not for Resale

Annex B

(informative)

Simulated surge arrester operation test

Replace Figure B.1 with the following:

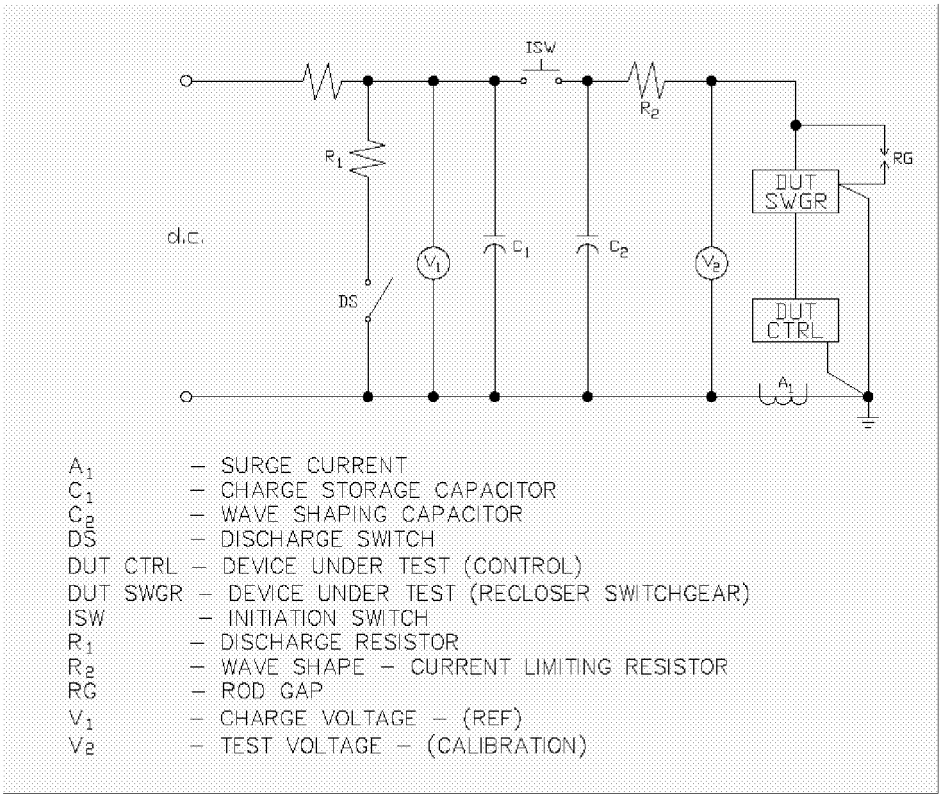

Figure B.1—Surge test circuit

--`,,`,,`-`-`,,`,,`,`,,`---

Copyright The Institute of Electrical and Electronics Engineers, Inc.
Provided by IHS under license with IEEE
No reproduction or networking permitted without license from IHS

Copyright © 2005 IEEE. All rights reserved.

Not for Resale

IEEE Standards

IEEE Std C37.60™-2003
(Revision of IEEE Std C37.60-1981)

C37.60™

IEEE Standard Requirements for Overhead, Pad-Mounted, Dry Vault, and Submersible Automatic Circuit Reclosers and Fault Interrupters for Alternating Current Systems Up to 38 kV

IEEE Power Engineering Society

Sponsored by the
Switchgear Committee

IEEE

Published by
The Institute of Electrical and Electronics Engineers, Inc.
3 Park Avenue, New York, NY 10016-5997, USA

11 August 2003

Print: SH95090
PDF: SS95090

Copyright The Institute of Electrical and Electronics Engineers, Inc.
Provided by IHS under license with IEEE
No reproduction or networking permitted without license from IHS

Not for Resale

IEEE Std C37.60™-2003
(Revision of IEEE Std C37.60-1981)

IEEE Standard for Overhead, Pad-Mounted, Dry Vault, and Submersible Automatic Circuit Reclosers and Fault Interrupters for Alternating Current Systems Up to 38 kV

Sponsor

Switchgear Committee
of the
IEEE Power Engineering Society

Approved 20 March 2003

IEEE-SA Standards Board

Abstract: Required definitions, ratings, procedures for performing design tests, production tests, and construction requirements for overhead, pad-mounted, dry vault, and submersible automatic circuit reclosers and fault interrupters for alternating systems up to 38 kV are specified.
Keywords: dry vault, fault interrupter, overhead, pad-mounted, recloser, submersible, standard operating duty, switchgear

---

The Institute of Electrical and Electronics Engineers, Inc.
3 Park Avenue, New York, NY 10016-5997, USA

Copyright © 2003 by the Institute of Electrical and Electronics Engineers, Inc.
All rights reserved. Published 11 August 2003. Printed in the United States of America.

IEEE is a registered trademark in the U.S. Patent and Trademark Office, owned by the Institute of Electrical and Electronics Engineers, Inc.

Print: ISBN 0-7381-3588-7 SH95090
PDF: ISBN 0-7381-3589-5 SS95090

No part of this publication may be reproduced in any form, in an electronic retrieval system or otherwise, without the prior written permission of the publisher.

--`,,`,`,-`-`,,`,,`,`,,`---

Copyright The Institute of Electrical and Electronics Engineers, Inc.
Provided by IHS under license with IEEE
No reproduction or networking permitted without license from IHS Not for Resale

IEEE Standards documents are developed within the IEEE Societies and the Standards Coordinating Committees of the IEEE Standards Associations (IEEE-SA) Standards Board. The IEEE develops its standards through a consensus development process, approved by the American National Standards Institute, which brings together volunteers representing varied viewpoints and interests to achieve the final product. Volunteers are not necessarily members of the Institute and serve without compensation. While the IEEE administers the process and establishes rules to promote fairness in the consensus development process, the IEEE does not independently evaluate, test, or verify the accuracy of any of the information contained in its standards.

Use of an IEEE Standard is wholly voluntary. The IEEE disclaims liability for any personal injury, property or other damage, of any nature whatsoever, whether special, indirect, consequential, or compensatory, directly or indirectly resulting from the publication, use of, or reliance upon this, or any other IEEE Standard document.

The IEEE does not warrant or represent the accuracy or content of the material contained herein, and expressly disclaims any express or implied warranty, including any implied warranty of merchantability or fitness for a specific purpose, or that the use of the material contained herein is free from patent infringement. IEEE Standards documents are supplied "**AS IS**."

The existence of an IEEE Standard does not imply that there are no other ways to produce, test, measure, purchase, market, or provide other goods and services related to the scope of the IEEE Standard. Furthermore, the viewpoint expressed at the time a standard is approved and issued is subject to change brought about through developments in the state of the art and comments received from users of the standard. Every IEEE Standard is subjected to review at least every five years for revision or reaffirmation. When a document is more than five years old and has not been reaffirmed, it is reasonable to conclude that is contents, although still of some value, do not wholly reflect the present state of the art. Users are cautioned to check to determine that they have the latest edition of any IEEE Standard.

In publishing and making this document available, the IEEE is not suggesting or rendering professional or other services for, or on behalf of, any person or entity. Nor is the IEEE undertaking to perform any duty owed by any other person or entity to another. Any person utilizing this, and any other IEEE Standards document, should rely upon the advice of a competent professional in determining the exercise of reasonable care in any given circumstances.

Interpretations: Occasionally questions may arise regarding the meaning of portions of standards as they relate to specific applications. When the need for interpretations is brought to the attention of IEEE, the Institute will initiate action to prepare appropriate responses. Since IEEE Standards represent a consensus of concerned interests, it is important to ensure that any interpretation has also received the concurrence of a balance of interests. For this reason, IEEE and the members of its societies and Standards Coordinating Committees are not able to provide an instant response to interpretation requests except in those cases where the matter has previously received formal consideration.

Comments for revision of IEEE Standards are welcome from any interested party, regardless of membership affiliation with IEEE. Suggestions for changes in documents should be in the form of a proposed change of text, together with appropriate supporting comments. Comments on standards and requests for interpretations should be addressed to:

Secretary, IEEE-SA Standards Board
445 Hoes Lane
P.O. Box 1331
Piscataway, NJ 08855-1331
USA

Note: Attention is called to the possibility that implementation of this standard may require use of subject matter covered by patent rights. By publication of this standard, no position is taken with respect to the existence or validity of any patent rights in connection therewith. The IEEE shall not be responsible for identifying patents for which a license may be required by an IEEE standard or for conducting inquiries into the legal validity or scope of those patents that are brought to its attention.

Authorization to photocopy portions of any individual standard for internal or personal use is granted by the Institute of Electrical and Electronics Engineers, Inc., provided that the appropriate fee is paid to Copyright Clearance Center. To arrange for payment of licensing fee, please contact Copyright Clearance Center, Customer Service, 222 Rosewood Drive, Danvers, MA 01923, USA; +1 978 750 8400. Permission to photocopy portions of any individual standard for educational classroom use can also be obtained through the Copyright Clearance Center.

--`,,`,,`-`-`,,`,,`,`,,`---

Copyright The Institute of Electrical and Electronics Engineers, Inc.
Provided by IHS under license with IEEE
No reproduction or networking permitted without license from IHS Not for Resale

Introduction

(This introduction is not part of IEEE Std C37.60-2003, IEEE Standard for Overhead, Pad-Mounted, Dry Vault, and Submersible Automatic Circuit Reclosers and Fault Interrupters for Alternating Current Systems Up to 38 kV.)

This standard has been revised from IEEE Std C37.60-1981, incorporating significant improvements that reflect the present state of the art in recloser technology. These include changes and additions in the following areas:

a) Expanded the standard to include gas-insulated reclosers.
b) Revised the title and scope to limit the standard to 38 kV; deleted ratings above 38 kV nominal.
c) Added voltage ratings commonly used outside of North America with related dielectric withstand capabilities taken from IEC 60694-2002-01.[a]
d) Added several new interrupting ratings in the 15.5 kV, 27 kV, and 38 kV ranges.
e) Revised limits of temperature and temperature rise to be consistent with circuit breaker standards.
f) Reorganized the switching tests into 6.3 following a format similar to IEEE Std 1247™-1998 and referenced IEEE Std 1247-1998 for switching test procedures.
g) Removed the requirement for transformer magnetizing tests; reference discussion in IEEE Std 1247-1998.
h) Clarified the intent of the switching tests as related required capabilities and prohibited the use of single-phase tests to qualify three-phase reclosers in the performance of the switching tests.
i) Removed the altitude correction factors. (Refer to the following paragraph and informative Annex E.)
j) Removed the X/R footnote and table of multiplication factors from old 5.6 to new informative Annex A with expanded information and data.
k) Added new informative Annex B.
l) Added transient recovery voltage (TRV) specifications and informative Annex C and Annex D.
m) Restricted the use of single-phase testing to verify three-phase performance.
n) Reduced radio influence voltage (RIV) limits.
o) Added Partial Discharge as a design and production test.
p) Reduced dc withstand voltage test time from 15 min. to 5 min.

Although this revised standard will be published before the work on IEEE PC37.100.1, Draft Standard Requirements for Power Switchgear [B13][b] is completed, it is the intention of the Recloser Working Group to issue supplements or revisions to adopt common requirements. There was considerable discussion in the Recloser Working Group regarding the addition of the partial discharge test requirements suggesting that this topic should be revisited at the next revision cycle to see if the data collected between now and then shall warrant any changes in the test procedure or test limits.

[a]Information on references can be found in Clause 2.

[b]The numbers in brackets correspond to the numbers of the bibliography in Annex F.

Copyright © 2003 IEEE. All rights reserved.

Copyright The Institute of Electrical and Electronics Engineers, Inc.
Provided by IHS under license with IEEE
No reproduction or networking permitted without license from IHS
Not for Resale
[12:40 7/8/03 K:/SGML/ieee/C37.60-2003/Revises-III/C.37.60-2003.3d] Ref: C.37.60-2003 Page: 3 1–70

Participants

The Accredited Standards Committee on Power Switchgear, C37, which reviewed and approved this standard, had the following members at the time of approval:

T. W. Olsen, *Acting Chair*
A. K. McCabe, *Vice Chair, HV Standards*
J. C. Scott, *Vice Chair, LV Standards*
D. L. Swindler, *Vice Chair, IEC Activities*
N. Ahmad, *Co-Secretary*
J. Collins, *Co-Secretary*

Organization Represented	*Name of Representative*
Electric Light & Power Group/Edision Electric Institute	E. M. Worland D. E. Galicia J. L. Koepfinger G. J. Martuscello Y. I. Musa
Institute of Electrical and Electronics Engineers, Inc.	M. D. Sigmon A. Dixon J. M. Jerabek T. E. Royster J. G. Wood D. J. Lemmerman (*alt.*) R. W. Long
National Electrical Manufacturers Association	G. Sakats G. T. Jones R. W. Long T. W. Olsen D. T. Stone
Testing Laboratory (Safety) Group	P. J. Notarian E. Roseen
Tennessee Valley Authority	D. N. Reynolds
Association of Iron & Steel Engineers	(vacant)
International Electrical Testing Association (NETA)	A. Peterson
U.S. Department of Agriculture	H. L. Bowles
U.S. Department of the Army—Office of the Chief of Engineers	J. A. Gilson
U.S. Department of the Navy—Naval Construction Battalion Center	D. Mills
Western Area Power Administration	(vacant)
National Electric Contractors Association	D. Harwood
Technical Liaison (nonvoting)	W. E. Laubach C. L. Wagner

At the time this revised standard was completed, the Recloser Working Group had the following membership:

David T. Stone, *Chair*

Chris Ambrose	Harry Hirz	Brian Miller
Charles Ball	William M. Hurst	Timothy E. Royster
Harvey L. Bowles	Edward M. Jankowich	John G. St. Clair
Raymond L. Capra	Donald R. Martin	John G. Wood
Marcel Fortin	Nigel P. McQuin	Elbert M. Worland
Ian J. Harvey		Janusz Zawadzki

Copyright © 2003 IEEE. All rights reserved.

Copyright The Institute of Electrical and Electronics Engineers, Inc.
Provided by IHS under license with IEEE
No reproduction or networking permitted without license from IHS
[12:40 7/8/03 K:/SGML/ieee/C37.60-2003/Revises-III/C.37.60-2003.3d] Not for Resale Ref: C.37.60-2003 Page: 4 1–70

The following members of the balloting committee voted on this revised standard. Balloters may have voted for approval, disapproval, or abstention.

Ronald L. Beard
Harvey L. Bowles
Matthew Brown
Robert A. Brown
Richard Buell
Ted Burse
Eldridge R. Byron
Carlos L. Cabrera-Rueda
Raymond L. Capra
Guru Dutt Dhingra
Alexander Dixon
Julian J. Dravis
Denis Dufournet
Peter W. Dwyer
Marcel Fortin
Ruben D. Garzon
Douglas H. Giraud
Mietek T. Glinkowski
Michael Goelz
Keith I. Gray
Randall C. Groves
Harold L. Hess
Patrick D. Holinka
William M. Hurst
Richard Jackson
Edward M. Jankowich
Robert Jeanjean
Ginger Kamber
Joseph L. Koepfinger
P. L. Kolarik
Stephen R. Lambert
Ward E. Laubach
John G. Leach
George N. Lester
Thomas M. Lewis
Gregory Luri
Donald R. Martin
Deepak Mazumdar
Nigel P. McQuin
Gary L. Michel
Daleep C. Mohla
Georges F. Montillet
Frank J. Muench
Ted W. Olsen
Miklos J. Orosz
Neville Parry
Gordon O. Perkins
R. Kris Ranjan
James C. Ransom
Radhakrishna V. Rebbapragada
David N. Reynolds
Hugh C. Ross
Timothy E. Royster
Gerald Sakats
Vincent Saporita
E. William Schmunk
James E. Smith
R. Kirkland Smith
H. Melvin Smith
John G. St. Clair
Guy St. Jean
Frank Stepniak
Frank Stevens
David T. Stone
David Swindler
Chand Z. Tailor
Stan H. Telander
Thomas J. Tobin
Charles L. Wagner
James W. Wilson
John G. Wood
Elbert M. Worland
Janusz Zawadzki

When the IEEE-SA Standards Board approved this revised standard on 20 March 2003, it had the following membership:

Don Wright, *Chair*
Howard M. Frazier, *Vice Chair*
Judith Gorman, *Secretary*

H. Stephen Berger
Joseph A. Bruder
Bob Davis
Richard DeBlasio
Julian Forster*
Toshio Fukuda
Arnold M. Greenspan
Raymond Hapeman
Donald N. Heirman
Laura Hitchcock
Richard H. Hulett
Anant Kumar Jain
Lowell G. Johnson
Joseph L. Koepfinger
Thomas J. McGean
Steve M. Mills
Daleep C. Mohla
William J. Moylan
Paul Nikolich
Gary S. Robinson
Malcolm V. Thaden
Geoffrey O. Thompson
Doug Topping
Howard L. Wolfman

*Member Emeritus

Also included are the following nonvoting IEEE-SA Standards Board liaisons:

Alan Cookson, *NIST Representative*
Satish K. Aggarwal, *NRC Representative*

Savoula Amanatidis
IEEE Standards Managing Editor

Copyright © 2003 IEEE. All rights reserved.

Copyright The Institute of Electrical and Electronics Engineers, Inc.
Provided by IHS under license with IEEE
No reproduction or networking permitted without license from IHS
Not for Resale
[12:40 7/8/03 K:/SGML/ieee/C37.60-2003/Revises-III/C.37.60-2003.3d] Ref: C.37.60-2003 Page: 5 1–70

Contents

1. Scope 1

2. References 1

3. Definitions 3

4. Service conditions 4

4.1 Usual service conditions 4
4.2 Unusual service conditions 4

5. Rating 5

5.1 Rating information 5
5.2 Rated maximum voltage 5
5.3 Rated power-frequency 6
5.4 Rated continuous current 6
5.5 Rated minimum tripping current (for series-trip reclosers/FIs) 7
5.6 Rated symmetrical interrupting current 7
5.7 Rated symmetrical making current 9
5.8 Rated lightning impulse withstand voltage 9
5.9 Rated control voltage and ranges 9
5.10 Rated line and cable charging interrupting currents (where applicable) 9

6. Design tests (type tests) 15

6.1 General 15
6.2 Insulation (dielectric) tests 15
6.3 Switching tests 18
6.4 Making current capability 21
6.5 Rated symmetrical interrupting current tests 21
6.6 Minimum tripping current tests 32
6.7 Partial discharge (corona) tests 33
6.8 Radio influence voltage tests (RIV) 34
6.9 Surge current test; series-trip reclosers/FIs 35
6.10 Temperature rise test 36
6.11 Time–current tests 38
6.12 Mechanical duty test 39

Copyright © 2003 IEEE. All rights reserved.

Copyright The Institute of Electrical and Electronics Engineers, Inc.
Provided by IHS under license with IEEE
No reproduction or networking permitted without license from IHS [12:40 7/8/03 K:/SGIMG/ieee/C37.60-2003/Revises-III/C.37.60-2003.3d] Not for Resale Ref: C.37.60-2003 Page: 6 1–70

6.13 Control electronic elements surge withstand capability (SWC) tests 39
6.14 Condition of recloser/FI after each test of 6.3 and 6.5 41

7. Production tests (routine tests) 42

7.1 Reclosing and overcurrent trip calibration 43
7.2 Control, secondary wiring, and accessory devices check tests 43
7.3 Dielectric withstand test; 1-min. dry power-frequency 43
7.4 Partial discharge test 43
7.5 Mechanical operations tests 43
7.6 Water leak test 44

8. Field tests on units in service, including dc withstand tests on cables 44

9. Construction requirements 45

9.1 Tank construction: submersible or dry vault reclosers/FIs 45
9.2 Grounding provisions 45
9.3 Insulating medium quantity indicators 46
9.4 Oil sampling provision (submersible reclosers/FIs) 46
9.5 Manual operating provision 46
9.6 Position indicator 46
9.7 Nameplate markings 46
9.8 Stored energy mechanism charge indicator 47
9.9 Enclosure integrity 47
9.10 Counters 47
9.11 Conductor terminal sizes 47
9.12 Tank construction—pressurized reclosers/FIs only 47

Annex A (informative) X/R Ratios 48

Annex B (informative) Simulated surge arrester operation tests 50

Annex C (normative) Method of drawing the envelope of the prospective transient recovery voltage of a circuit and determining the representative parameters 53

Annex D (informative) Background basis of recloser TRV values 55

Annex E (informative) Altitude correction factors 59

Annex F (informative) Bibliography 62

Copyright © 2003 IEEE. All rights reserved.

Copyright The Institute of Electrical and Electronics Engineers, Inc.
Provided by IHS under license with IEEE
No reproduction or networking permitted without license from IHS [12:40 7/8/03 K:/SGML/see/C37.60-2003/Revises-III/C.37.60-2003.3d] Not for Resale Ref: C.37.60-2003 Page: 7 1–70

Copyright The Institute of Electrical and Electronics Engineers, Inc.
Provided by IHS under license with IEEE
No reproduction or networking permitted without license from IHS

IEEE Standard for Overhead, Pad-Mounted, Dry Vault, and Submersible Automatic Circuit Reclosers and Fault Interrupters for Alternating Current Systems up to 38 kV

1. Scope

This standard applies to all overhead, pad-mounted, dry vault, and submersible single- or multipole alternating current automatic circuit reclosers and fault interrupters for rated maximum voltages above 1000 V and up to 38 kV.

In order to simplify this standard where possible, the term *recloser/FI* (*reclosers/FIs*) has been substituted for *automatic circuit recloser* or *fault interrupter* or both.

NOTE—When reclosers are applied in a substation, special considerations may apply, see 6.5.1.5.3.

2. References

This standard shall be used in conjunction with the following publications. When the following publications are superseded by an approved revision, the revision shall apply.

ANSI C37.06-2000, American National Standard for AC High-Voltage Circuit Breakers Rated on a Symmetrical Current Basis—Preferred Ratings and Related Required Capabilities.[1]

ANSI C37.06.1-2000, American National Standard Guide for AC High-Voltage Circuit Breakers Rated on a Symmetrical Current Basis—Designated "Definite Purpose for Fast Transient Recovery Voltage Rise Times."

[1]ANSI publications are available from the Sales Department, American National Standards Institute, 11 West 42nd Street, 13th Floor, New York, NY 10036, USA (http://www.ansi.org).

Copyright © 2003 IEEE. All rights reserved.

Copyright The Institute of Electrical and Electronics Engineers, Inc.
Provided by IHS under license with IEEE
No reproduction or networking permitted without license from IHS
Not for Resale
[12:40 7/8/03 K:/SGML/ieee/C37.60-2003/Revises-III/C.37.60-2003.3d] Ref: C.37.60-2003 Page: 9 1–70

ANSI C37.85-2002, American National Standard for Switchgear—Alternating-Current High-Voltage Power Vacuum Interrupters—Safety Requirements for X-Radiation Limits.

ANSI C57.12.28-1999, American National Standard for Pad-mounted Equipment—Enclosure Integrity.

ANSI C63.2-1996, American National Standard for Electromagnetic Noise and Field Strength Instrumentation, 10 kHz to 40 GHz—Specifications.

ASME BPVC-1998, Boilers and Pressure Vessels Code—Section VIII: Rules for Construction of Pressure Vessels—Division 1.[2]

IEC 60060-1-1989-11, High-Voltage Test Techniques—Part 1: General Definitions and Test Requirements.[3]

IEC 60270-2000-12, High-Voltage Test Techniques—Partial Discharge Measurements.

IEC 60502-1-1998-11, Power Cables with Extruded Insulation and Their Accessories for Rated Voltages from 1 kV ($U_m = 1{,}2$ kV) Up to 30 kV ($U_m = 36$ kV)—Part 1: Cables for Rated Voltages of 1 kV ($U_m = 1{,}2$ kV) and 3 kV ($U_m = 3{,}6$ kV).

IEC 60502-2-1998-11, Power Cables with Extruded Insulation and Their Accessories for Rated Voltages from 1 kV ($U_m = 1{,}2$ kV) Up to 30 kV ($U_m = 36$ kV)—Part 2: Cables for Rated Voltages from 6 kV ($U_m = 7{,}2$ kV) Up to 30 kV ($U_m = 36$ kV).

IEC 60694-2002-01, Common Specifications for High-Voltage Switchgear and Controlgear Standards.

IEC 62271-100-2003-05, High-Voltage Switchgear and Controlgear—Part 100: High-Voltage Alternating-Current Circuit-Breakers.

IEEE Std 4™-1995, IEEE Standard Techniques for High Voltage Testing.[4,5]

IEEE Std 4a™-2001, Amendment to IEEE Standard Techniques for High-Voltage Testing.

IEEE Std 386™-1995, IEEE Standard for Separable Insulated Connector Systems for Power Distribution Systems Above 600 V.

IEEE Std 1247™-1998, IEEE Standard for Interrupter Switches for Alternating Current Rated Above 1000 Volts.

IEEE Std 1291™-1993, IEEE Guide for Partial Discharge Measurement in Power Switchgear.

IEEE Std C37.04-1999, IEEE Standard Rating Structure for AC High-Voltage Circuit Breakers.

IEEE Std C37.09-1999, IEEE Standard Test Procedure for AC High-Voltage Circuit Breakers Rated on a Symmetrical Current Basis.

[2]ASME publications are available from the American Society of Mechanical Engineers, 3 Park Avenue, New York, NY 10016-5990, USA (http://www.asme.org).

[3]IEC publications are available from the Sales Department of the International Electrotechnical Commission, Case Postale 131, 3, rue de Varembé, CH-1211, Genève 20, Switzerland/Suisse (http://www.iec.ch/). IEC publications are also available in the United States from the Sales Department, American National Standards Institute, 11 West 42nd Street, 13th Floor, New York, NY 10036, USA (http://www.ansi.org).

[4]The IEEE standards or products referred to in Clause 2 are trademarks owned by the Institute of Electrical and Electronics Engineers, Inc.

[5]IEEE publications are available from the Institute of Electrical and Electronics Engineers, 445 Hoes Lane, P.O. Box 1331, Piscataway, NJ 08855-1331, USA (http://standards.ieee.org/).

Copyright © 2003 IEEE. All rights reserved.

Copyright The Institute of Electrical and Electronics Engineers, Inc.
Provided by IHS under license with IEEE
No reproduction or networking permitted without license from IHS
Not for Resale
[12:40 7/8/03 K:/SGML/ieee/C37.60-2003/Revises-III/C.37.60-2003.3d] Ref: C.37.60-2003 Page: 10 1–70

IEEE Std C37.41™-2000, IEEE Standard Design Tests for High-Voltage Fuses, Distribution Enclosed Single-Pole Air Switches, Fuse Disconnecting Switches, and Accessories.

IEEE Std C37.90.1™-2002, IEEE Standard for Surge Withstand Capability (SWC) Tests for Relays and Relay Systems Associated with Electric Power Apparatus.

IEEE Std C37.100™-1992 (Reaff 2001), IEEE Standard Definitions for Power Switchgear.

NEMA 107-1987 (Reaff 1993), Methods of Measurement of Radio Influence Voltage (RIV) of High-Voltage Apparatus.[6]

3. Definitions

The definitions of terms contained in this standard, and to the related standards for recloser/FIs, shall be in accordance with IEEE Std C37.100-1992. These definitions are not intended to embrace all possible meanings of the terms. They are applicable only to the subject treated in this standard.

unit operation (of a recloser): An interrupting operation followed by a closing operation. The final interruption is also considered one unit operation.

NOTE—See Figure 1.

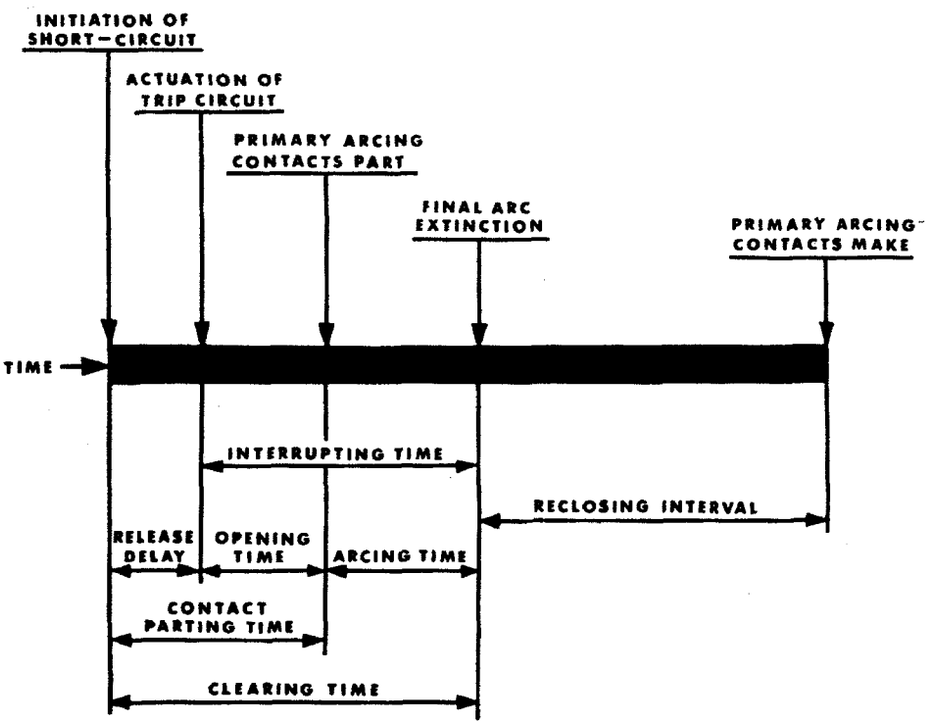

Figure 1—Unit operation

[6]NEMA publications are available from Global Engineering Documents, 15 Inverness Way East, Englewood, CO 80112-5704, USA (http://global.ihs.com/).

Copyright © 2003 IEEE. All rights reserved.

Copyright The Institute of Electrical and Electronics Engineers, Inc.
Provided by IHS under license with IEEE
No reproduction or networking permitted without license from IHS
Not for Resale Ref: C.37.60-2003 Page: 11 1–70

4. Service conditions

4.1 Usual service conditions

Reclosers/FIs conforming to this standard shall be suitable for operation at their standard ratings provided that:

a) The temperature of the air (ambient temperature) is not above 40 °C or below −30 °C.
b) The altitude does not exceed 1000 m.
c) For submersible units, the water head does not exceed 3 m above the base of the enclosure during occasional submersion. Exposure to chemical or electrochemical reactions may be encountered in a subgrade environment. The subgrade environment may contain chemicals that contribute to mild corrosive reactions.

4.2 Unusual service conditions

Unusual service conditions shall include, but are not limited to, service conditions that exceed those defined in 4.1 or extremes in:

a) Actual service duty cycle
b) System conditions
c) Site conditions
d) Shock and/or vibration
e) Damaging fumes or vapors
f) Excessive or abrasive dust
g) Explosive mixtures of dust or gases
h) Salt air or extreme humidity

Unusual service conditions shall be brought to the attention of those responsible for the manufacture of the equipment to define or prevent loss of performance or service life, if any, from specified values. Applicable standards such as those for altitude correction shall be used when available.

4.2.1 Abnormal ambient temperatures

Reclosers/FIs may be applied at higher or lower ambient temperatures than specified, but performance may be affected and special consideration shall be given to these applications.

4.2.2 Altitudes above 1000 m

Reclosers/FIs may be applied at altitudes higher than 1000 m; however, the rated lightning impulse withstand voltage, rated maximum voltage and rated continuous current shall be multiplied individually by the correction factor (see following note) to obtain values at which the application may be made. The rated symmetrical interrupting current, related required capabilities, and interrupting times are not affected by altitude.

NOTE—Altitude correction factors are being studied by the Switchgear Committee and will be adopted by issuance of a supplement or revision to this standard when they are approved. In the meantime, users should consult the manufacturer for appropriate derating when the equipment is applied above 1000 m. Refer also to Annex E.

Copyright © 2003 IEEE. All rights reserved.

Copyright The Institute of Electrical and Electronics Engineers, Inc.
Provided by IHS under license with IEEE
No reproduction or networking permitted without license from IHS Not for Resale
[12:40 7/8/03 K:/SGML/ieee/C37.60-2003/Revises-III/C.37.60-2003.3d] Ref: C.37.60-2003 Page: 12 1–70

5. Rating

5.1 Rating information

The ratings shall include the following:

a) Rated maximum voltage
b) Rated power-frequency
c) Rated continuous current
d) Rated minimum tripping current (series-trip reclosers only)
e) Rated symmetrical interrupting current
f) Rated symmetrical making current
g) Rated lightning impulse withstand voltage
h) Rated control voltage

NOTE—Switching tests as specified in 6.3 are related required capabilities.

5.2 Rated maximum voltage

The preferred values of rated maximum voltage of reclosers/FIs are those shown in Column 2 of Table 1a) and Table 1b).

Table 1a)—Preferred voltage ratings and related test requirements for reclosers (except those covered in Table 1b) (Note 1)

Line no. (Note 2)	Rated maximum voltage kV	Rated lightning impulse withstand peak voltage kV (Note 3)	Power-frequency insulation level withstand test kV (Warning Box and Note 3)	
			1 min. dry	10 s wet
Column 1	Column 2	Column 3	Column 4	Column 5
1	15	95	36	30
2	15.5	110	50	45
3	27	(Note 4)	60	50
4	38	150	70	60
11	12	75	28	23
12	17.5	95	38	32
13	24	125	50	45
14	36	170	70	60

WARNING
When performing tests involving open contacts in vacuum, adequate precautions such as shielding or distance should be used to protect test personnel against the possible occurrences of higher X-radiation due, for example, to incorrect contact spacing, or to the application of voltages in excess of those specified. For example, maintaining a distance of 2–3 m between the recloser/FI and all test personnel is a typical basic precaution to reduce the risk of excess X-radiation exposure. Further discussion of shielding, adequate distances and personnel exposure limits are found in ANSI Std C37.85-2002.

NOTES
1—The test values shown in Table 1a) are for design tests; refer to Clause 8 for field testing.
2—Lines 11–14 refer to distribution systems commonly found outside of North America; the test withstand levels were taken from IEC 60694-2002-01, Table 1a).
3—These are performance characteristics specified as test requirements in this standard.
4—For oil interrupting reclosers, 150 kV; for all others, 125 kV.

Copyright © 2003 IEEE. All rights reserved.

Copyright The Institute of Electrical and Electronics Engineers, Inc.
Provided by IHS under license with IEEE
No reproduction or networking permitted without license from IHS
Not for Resale
[12:40 7/8/03 K:/SGML/ieee/C37.60-2003/Revises-III/C.37.60-2003.3d] Ref: C.37.60-2003 Page: 13 1–70

Table 1b)—Preferred voltage ratings and related test requirements for pad-mounted, dry vault and submersible reclosers, and nonreclosing fault interrupters, all with vacuum or SF_6 interrupters (Note 1)

Line no. (Note 2)	Rated maximum voltage kV	Rated lightning impulse withstand peak voltage kV (Note 3)	Power-frequency insulation level withstand test kV (Warning Box and Note 3)		Withstand test dc voltage kV (Warning Box and Note 4) 5 min.
			1 min. dry	10 s wet	
Column 1	Column 2	Column 3	Column 4	Column 5	Column 6
1					
2	15.5	95	35	Not required	53
3	27	125	40	Not required	78
4	38	150	50	Not required	103 (Note 3)
11	12	60	28	Not required	42
12	17.5	75	38	Not required	57
13	24	95	50	Not required	78
14	36	145	70	Not required	103 (Note 3)

WARNING

When performing tests involving open contacts in vacuum, adequate precautions such as shielding or distance should be used to protect test personnel against the possible occurrences of higher X-radiation due, for example, to incorrect contact spacing, or to the application of voltages in excess of those specified. For example, maintaining a distance of 2–3 m between the recloser/FI and all test personnel is a typical basic precaution to reduce the risk of excess X-radiation exposure. Further discussion of shielding, adequate distances and personnel exposure limits are found in ANSI C37.85-2002.

NOTES

1—The test values shown in Table 1b) are for design tests; refer to Clause 8 for field testing.

2—Lines 11–14 refer to distribution systems commonly found outside of North America; the test withstand levels were taken from IEC 60694-2002-01, Table 1a).

3—These are performance characteristics specified as test requirements in this standard.

4—DC withstand tests are required for pad-mounted, dry vault and submersible gear since this type of equipment is interfaced to the power system via separable connectors. The test requirements of separable connectors are specified in Table 1 of IEEE Std 386-1995 and these values are reproduced here in Column 6. DC withstand testing of 36/38 kV cables is not a recommended practice. Very low frequency (VLF) testing is a relatively new practice being used as an alternative to the dc withstand test. Reference IEEE Std 433™-1979 [B8][7]. The dc withstand test requirement on the recloser/FI demonstrates its capability to withstand either dc withstand or VLF testing of connected cables.

5.3 Rated power-frequency

The rated power-frequency shall be the frequency at which the recloser/FI and its components are designed to operate. The preferred rated power-frequencies are 50 Hz or 60 Hz.

5.4 Rated continuous current

The preferred ratings for the continuous current of reclosers/FIs are those shown in Table 2.

5.4.1 Conditions of continuous current rating

a) Reclosers/FIs shall be used under the usual service conditions defined in 4.1.
b) Current ratings shall be based on the total temperature limits of the materials used. A temperature rise reference is given to permit testing at reduced ambient.

[7]The numbers in brackets correspond to those of the bibliography in Annex F.

Copyright © 2003 IEEE. All rights reserved.

Copyright The Institute of Electrical and Electronics Engineers, Inc.
Provided by IHS under license with IEEE
No reproduction or networking permitted without license from IHS Not for Resale
[12:40 7/8/03 K:/SGML/ieee/C37.60-2003/Revises-III/C.37.60-2003.3d] Ref: C.37.60-2003 Page: 14 1–70

Table 2—Preferred continuous current ratings for reclosers and fault interrupters

Recloser or fault interrupter type	Preferred continuous current ratings (A)		
Series-trip reclosers/FIs	5	35	200
	10	50	280
	15	70	400
	25	100	560
		140	
Oil interrupting shunt-trip reclosers/FIs	50	280	560
	100	400	1120
All other reclosers or fault interrupters	100	315	800
	200	400	1000
	250	500	1250
		630	

NOTE—It is recognized that reclosers/FIs designed under an earlier revision of this standard may have continuous current ratings not shown in Table 1. Examples include ratings of 560 A, 600 A, and 1200 A.

c) Reclosers/FIs designed for installation in enclosures shall have their ratings based on the ventilation of such enclosures and a 40 °C ambient temperature outside the enclosure.
d) Outdoor reclosers/FIs and indoor reclosers/FIs without enclosures shall have ratings based on a 40 °C ambient temperature.

5.4.2 Limits of observable temperature rise

At rated current, the observable hottest-spot temperature rise above ambient and the total temperature of each of the various parts shall not exceed those listed in Table 3.

5.5 Rated minimum tripping current (for series-trip reclosers/FIs)

The preferred rated minimum tripping current shall be twice the continuous current rating with a tolerance of ± 10%.

NOTE—The minimum tripping current for shunt-trip reclosers/FIs is variable and has no relation to the rated continuous current. Information on specific reclosers/FIs should be obtained from the manufacturer.

5.6 Rated symmetrical interrupting current

The preferred values for the rated symmetrical interrupting currents of reclosers/FIs are as given in Table 4 for series-trip reclosers/FIs and Column 4 of Table 5a), Table 5b), and Table 6 for shunt-trip reclosers/FIs.

The rated symmetrical interrupting current shall be based on the capability of the reclosers/FIs to interrupt the corresponding asymmetrical current in circuits having X/R values as given in Columns 5, 7, and 9 of Table 5a), Table 5b), and Table 6 and with a power-frequency recovery voltage equal to the rated maximum voltage and with transient recovery voltages as defined in 6.5.1.5.

Copyright © 2003 IEEE. All rights reserved.

Copyright The Institute of Electrical and Electronics Engineers, Inc.
Provided by IHS under license with IEEE
No reproduction or networking permitted without license from IHS
Not for Resale
[12:40 7/8/03 K:/SGML/ieee/C37.60-2003/Revises-III/C.37.60-2003.3d] Ref: C.37.60-2003 Page: 15 1–70

Table 3—Limits of temperature and temperature rise for various parts and materials of reclosers/FIs

Nature of the part and material (Notes 1, 2, and 3)		Total temperature (°C)	Temperature rise at ambient (40 °C)
1. Material used as insulation and metal parts in contact with insulation of these classes (Note 4)	O (90 °C)	90	50
	A (105 °C)	105	65
	B (130 °C)	130	90
	F (155 °C)	155	115
	H (180 °C)	180	140
	C (220 °C)	220	180
	Oil (Note 5)	90	50
2. Contacts (Note 6)	Bare copper and bare-copper alloy		
	—in air	75	35
	—in SF_6 (sulfurhexaflouride)	105	65
	—in oil	80	40
	Silver-coated or nickel-coated (Note 7)		
	—in air	105	65
	—in SF_6	105	65
	—in oil	90	50
	Tin-coated (Note 7)		
	—in air	105	65
	—in SF_6	105	65
	—In oil	90	50
3. Connections, bolted or the equivalent (Note 8)	Bare-copper, bare-copper alloy, bare aluminum or bare-aluminum alloy		
	—in air	90	50
	—in SF_6	115	75
	—in oil	100	60
	Silver-coated or nickel-coated		
	—in air	115	75
	—in SF_6	115	75
	—in oil	100	60
	Tin-coated		
	—in air	105	65
	—in SF_6	105	65
	—in oil	100	60
4. All other contacts or connections made of bare metals or coated with other materials		(Note 9)	(Note 9)
5. Terminals for the connection to external conductors by screws or bolts (Note 10)	Bare-copper and bare-copper alloy	90	50
	Silver-coated, nickel-coated, tin-coated	105	65
	Other coatings	(Note 9)	(Note 9)
6. Metal parts acting as springs		(Note 11)	(Note 11)

Copyright © 2003 IEEE. All rights reserved.

Copyright The Institute of Electrical and Electronics Engineers, Inc.
Provided by IHS under license with IEEE
No reproduction or networking permitted without license from IHS
Not for Resale
[12:40 7/8/03 K:/SGML/ieee/C37.60-2003/Revises-III/C.37.60-2003.3d] Ref: C.37.60-2003 Page: 16 1–70

NOTES
1—According to its function, the same part may belong to several categories as listed in Table 3. In this case, the permissible maximum values of total temperature and temperature rise to be considered are the lowest among the relevant categories.
2—For sealed interrupters, the values of total temperature and temperature-rise limits are not applicable for parts inside the sealed interrupter. The remaining parts shall not exceed the values of temperature and temperature rise given in Table 3.
3—The temperatures of conductors between contacts and connections are not covered in Table 3, as long as the temperature at the point of contact between conductors and insulation does not exceed the limits established for the insulating material.
4—The classes of insulating materials are those given in IEC 60694-2002-01.
5—The top oil (upper layer) temperature shall not exceed 40 °C rise or 80 °C total. The 50 °C and 90 °C values refer to the hottest spot temperature of parts in contact with oil.
6—When contact parts have different coatings, the permissible temperatures and temperature rises shall be those of the part having the lower value permitted in Table 3.
7—The quality of the coated contacts shall be such that a layer of coating material remains at the contact area:
(a) After making and breaking tests (if any);
(b) After short-time withstand current tests;
(c) After the mechanical endurance test according to the relevant specifications for each piece of equipment. Otherwise, the contacts shall be regarded as "bare."
8—When connection parts have different coatings, the permissible temperatures and temperature rises shall be those of the part having the lower value permitted in Table 3.
9—When materials other than those given in Table 3 are used, their properties shall be considered in order to determine the maximum permissible temperature rises.
10—The values of temperature and temperature rise are valid even if the conductor to the terminals is bare.
11—The temperature shall not reach a value where the temper of the material is impaired.

5.7 Rated symmetrical making current

The rated symmetrical making current shall be the same value as the rated symmetrical interrupting current, with maximum asymmetry corresponding to the X/R ratio in Column 9 of Table 5a), Table 5b), and Table 6.

5.8 Rated lightning impulse withstand voltage

The preferred values for the rated lightning impulse withstand voltage of reclosers/FIs are those given in Column 3 of Table 1a) and Table 1b) for both negative and positive test polarities. The voltage wave shall reach its peak value in 1.2 μs and decay to one-half its peak value in 50 μs.

5.9 Rated control voltage and ranges

When measured at the control power terminals of the operating mechanisms with the maximum operating current flowing, the preferred rated control voltages for the control power supply of switching and interrupting devices are those shown in Table 7.

5.10 Rated line and cable charging interrupting currents (where applicable)

The preferred line and cable charging interrupting current ratings for reclosers/FIs having these capabilities are as given in Table 8.

Copyright © 2003 IEEE. All rights reserved.

Copyright The Institute of Electrical and Electronics Engineers, Inc.
Provided by IHS under license with IEEE
No reproduction or networking permitted without license from IHS Not for Resale
[12:40 7/8/03 K:/SGML/ieee/C37.60-2003/Revises-III/C.37.60-2003.3d] Ref: C.37.60-2003 Page: 17 1–70

Table 4—Preferred values for symmetrical interrupting current ratings of series-trip reclosers/FIs

	Symmetrical interrupting current rating in amperes						
	Single-phase reclosers/FIs						
	Recloser line number (Table 4a)						
	1	2	3	4	5	6	7
	Rated maximum voltage, kV						
Continuous current rating (A)	15	15.5	15.5	15.5	27.0	27.0	38.0
5	125	200	—	—	200	—	—
10	250	400	—	—	400	—	—
15	375	600	—	—	600	—	—
25	625	1000	1500	—	1000	—	—
35	875	1400	2100	—	1400	—	—
50	1250	2000	3000	—	2000	3000	—
70	—	2000	4000	—	2500	4000	—
100	—	2000	4000	6000	2500	4000	6000
140	—	—	4000	8400	—	4000	8000
200	—	—	4000	10000	—	4000	8000
280	—	—	4000	10000	—	4000	8000
400	—	—	—	10000	—	—	8000
560	—	—	—	10000	—	—	8000

	Three-phase reclosers/Fis						
	Recloser/FI line number (Table 4b)						
	1	2	3	4	5 and 9	8	13
	Rated maximum voltage, kV						
Continuous current rating, (A)	15	15.5	15.5	15.5	15.5 and 27	27	38
5	125	200	—	—	—	200	—
10	250	400	—	—	—	400	—
15	375	600	—	—	—	600	—
25	625	1000	1500	1500	—	1000	1500
35	875	1400	2100	2100	—	1400	2100
50	1250	2000	3000	3000	—	2000	3000
70	—	2000	4000	4000	—	2500	4200
100	—	2000	4000	4000	6000	2500	6000
140	—	—	4000	4000	8000	—	6000
200	—	—	4000	4000	8000	—	6000
280	—	—	4000	4000	8000	—	6000
400	—	—	—	4000	8000	—	6000
560	—	—	—	—	8000	—	—

NOTE—Performance characteristics are the same as shown in Table 5a) and Table 5b) for the same line number.

Copyright © 2003 IEEE. All rights reserved.

Copyright The Institute of Electrical and Electronics Engineers, Inc.
Provided by IHS under license with IEEE
No reproduction or networking permitted without license from IHS Not for Resale
[12:40 7/8/03 K:/SGML/ieee/C37.60-2003/Revises-III/C.37.60-2003.3d] Ref: C.37.60-2003 Page: 18 1–70

Table 5a)—Preferred values for symmetrical rated interrupting current and performance characteristics of single-phase oil interrupting reclosers

		Current ratings (A)		Standard operating duty (Note 1)						
				Percent of interrupting rating						
				15–20		45–55		90–100		
Line no.	Rated maximum voltage kV	Continuous	Symmetrical interrupting	X/R (Note 3)	Number of unit operations	X/R (Note 3)	Number of unit operations	X/R (Note 3)	Number of unit operations	Total number of unit operations
Column 1	Column 2	Column 3	Column 4	Column 5	Column 6	Column 7	Column 8	Column 9	Column 10	Column 11
		Single-phase reclosers/FIs								
1	15	50	1250	2	40	4	40	8	20	100
2	15.5	100	2000	2	32	5	24	10	12	68
3	15.5	280	4000	3	32	6	20	12	12	64
4	15.5	560	10 000	4	28	8	20	(Note 2)	10	58
5	27	100	2500	2	32	5	24	12	12	68
6	27	280	4000	3	32	6	20	13	12	64
7	38	560	8000	4	28	8	20	(Note 2)	10	58

NOTES
1—These are performance characteristics specified as test requirements in this standard, IEEE Std C37.60-2003.
2—Refer to Column 9: $X/R = 14$ for 50 Hz and 17 for 60 Hz for a time constant of 45 ms.
3—For test purposes, X/R values are minimum values. Refer to 5.6 and 6.5.2.

Copyright © 2003 IEEE. All rights reserved.

Copyright The Institute of Electrical and Electronics Engineers, Inc.
Provided by IHS under license with IEEE
No reproduction or networking permitted without license from IHS
[12:40 7/8/03 K:/SGML/ieee/C37.60-2003/Revises-III/C.37.60-2003.3d]
Not for Resale
Ref: C.37.60-2003
Page: 19
1–70

Table 5b)—Preferred values for rated symmetrical interrupting current and performance characteristics of three-phase oil interrupting reclosers

				Standard operating duty (Note 1)						
				Percent of interrupting rating						
		Current ratings (A)		15–20		45–55		90–100		
Line no.	Rated maximum voltage, kV	Continuous	Symmetrical interrupting	*X*/*R* (Note 3)	Number of unit operations	*X*/*R* (Note 3)	Number of unit operations	*X*/*R* (Note 3)	Number of unit operations	Total number of unit operations
Column 1	Column 2	Column 3	Column 4	Column 5	Column 6	Column 7	Column 8	Column 9	Column 10	Column 11
		Three-phase reclosers/FIs								
1	15	50	1250	2	40	4	40	8	20	100
2	15.5	100	2000	2	32	5	24	10	12	68
3	15.5	280	4000	3	32	6	20	12	12	64
4	15.5	400								
5	15.5	560	8000	3	28	7	20	(Note 2)	10	58
6	15.5	560	16 000	4	28	8	20	(Note 2)	10	58
7	15.5	1120								
8	27	100	2500	2	32	5	24	12	12	68
9	27	560	8000	4	28	8	20	(Note 2)	10	58
10	27	560	10 000							
11	27	1120	8000							
12	27	560	12 000							
13	38	400	6000	4	28	8	24	(Note 2)	10	62
14	38	560	8000	4	28	8	20	(Note 2)	10	58
15	38	560	16 000							
16	38	1120	12 000							

NOTES

1—These are performance characteristics specified as test requirements in this standard, IEEE Std C37.60-2003.

2—Refer to Column 9: $X/R = 14$ for 50 Hz and 17 for 60 Hz for a time constant of 45 ms.

3—For test purposes, X/R values are minimum values. Refer to 5.6 and 6.5.2.

Copyright © 2003 IEEE. All rights reserved.

Copyright The Institute of Electrical and Electronics Engineers, Inc.
Provided by IHS under license with IEEE
No reproduction or networking permitted without license from IHS
[12:40 7/8/03 KJ/SGML/ieee/C37.60-2003/Revises-III/C.37.60-2003.3d]
Not for Resale Ref: C.37.60-2003 Page: 20 1–70

Table 6—Preferred values of rated symmetrical interrupting current and performance characteristics of reclosers/FIs with vacuum or SF_6 interrupters (including pad-mounted, dry vault, and submersible reclosers, and nonreclosing fault interrupters)

				Standard operating duty (Notes 1 and 3)						
				Percent of interrupting rating						
				15–20 (Note 5)		45–55		90–100		
Line no.	Rated maximum voltage kV	Not used (Note 5)	Symmetrical interrupting (kA)	X/R (Note 4)	Number of unit operations	X/R (Note 4)	Number of unit operations	X/R (Note 4)	Number of unit operations	Total number of unit operations
Column 1	Column 2	Column 3	Column 4	Column 5	Column 6	Column 7	Column 8	Column 9	Column 10	Column 11
1	12, 15.5, and 17.5	—	2.0	2	52	5	68	10	18	138
2			6.0	3	48	7	60	14	16	124
3			8.0	4	44	8	56	(Note 2)	16	116
4			12.5							
5			16.0							
6			20.0							
7	24 and 27	—	8.0	3	44	8	56	(Note 2)	16	116
8			10.0							
9			12.5	4						
10			16.0							
11			20.0							
12	36 and 38	—	8.0	4	44	8	56	(Note 2)	16	116
13			12.5							
14			16.0							
15			20.0							

NOTES
1—These are performance characteristics specified as test requirements in this standard, IEEE Std C37.60-2003.
2—Refer to Column 9: $X/R = 14$ for 50 Hz and 17 for 60 Hz for a time constant of 45 ms.
3—The standard operating duty represents half-life as measured by contact erosion. Refer to manufacturer's methods for determining permissible contact erosion.
4—For test purposes X/R values are minimum values. Refer to 5.6 and 6.5.25.
5—Column 3 is not used in Table 6; it is included to provide consistency with Table 5a) and Table 5b).

Copyright © 2003 IEEE. All rights reserved.

Copyright The Institute of Electrical and Electronics Engineers, Inc.
Provided by IHS under license with IEEE
No reproduction or networking permitted without license from IHS
[12:40 7/8/03 K:/SGML/ieee/C37.60-2003/Revises-III/C.37.60-2003.3d]
Not for Resale
Ref: C.37.60-2003
Page: 21
1–70

Table 7—Preferred rated control voltage and ranges

Direct current (Note 1), control voltage ranges (Notes 4 and 5)		
Nominal voltage	**Closing and auxiliary functions**	**Tripping function**
24 (Note 2)	—	14–28 (Note 6)
48 (Note 2)	38–56	28–56 (Note 6)
125	100–140	70–140
250	200–280	140–280
Alternating current, control voltage ranges (Notes 3, 4, and 5)		
Nominal voltage (50/60 Hz) single-phase	**Closing, tripping, and auxiliary functions**	
120	104–127 (3)	
240	208–254 (3)	
480	416–508 (3)	
Polyphase		
208Y/120	180Y/104–220Y/127	
240	208–254	
480	416–508	
480Y/277	416Y/240–508Y/292	

NOTES
1—It is recommended that the coils of closing, auxiliary, and tripping devices that are directly connected continually to one dc potential should be connected to the negative control bus so as to minimize electrolytic deterioration.
2—24 V or 48 V tripping, closing, and auxiliary functions are recommended only when the device is located near the battery or where special effort is made to ensure the adequacy of conductors between battery and control terminals.
3—Includes heater circuits.
4—Relays, motors, and other auxiliary equipment that function as a part of the control for a device shall be subject to the voltage limits imposed by this standard, whether mounted at the device or at a remote location.
5—In some applications, reclosers/FIs may be exposed to control voltages exceeding those specified herein due to abnormal conditions such as abrupt changes in line loading. Such application requires specific study, and the manufacturer should be consulted. Also, applications of reclosers/FIs containing solid-state control exposed continuously to control voltages approaching the upper limits of ranges specified herein require specific attention and the manufacturer should be consulted before application is made.
6—Reclosers/FIs having self-contained dc control sources shall operate over the range of 85% to 115% of nominal voltage and Table 7 shall not apply.

Table 8—Preferred line and cable charging interrupting current ratings

	Maximum rms current (A)	
Rated maximum voltage (kV)	**Line charging**	**Cable charging**
7.2	2	5
12	2	10
15.5	2	10
24	5	25
27	5	25
36	5	40
38	5	40

Copyright © 2003 IEEE. All rights reserved.

Copyright The Institute of Electrical and Electronics Engineers, Inc.
Provided by IHS under license with IEEE
No reproduction or networking permitted without license from IHS Not for Resale
[12:40 7/8/03 K:/SGML/ieee/C37.60-2003/Revises-III/C.37.60-2003.3d] Ref: C.37.60-2003 Page: 22 1–70

6. Design tests (type tests)

Reclosers/FIs shall be capable of meeting the design tests described in 6.2 through 6.13 inclusive. Once made, the design tests need not be repeated unless the design is changed so as to modify the performance characteristics of the recloser.

6.1 General

6.1.1 Condition of device to be tested

The recloser/FI shall be new and in good condition, and tests shall be applied before the device is put into commercial use.

6.1.2 Mounting of device

The recloser/FI shall be mounted in a manner closely approximating the normal service conditions for which it is designed. If the recloser/FI normally requires control apparatus, the control apparatus shall be connected during the tests observing the following minimum requirements:

a) The control shall be mounted on the recloser as intended by the manufacturer's design or positioned within 2 m of the recloser phase terminals under test, and
b) The recloser shall be connected to the control apparatus with the manufacturer's approved cable whose length shall be the maximum allowed by the manufacturer except that it need not exceed 6 m.

NOTE—If the control apparatus is intended by the manufacturer to always be integrally mounted to, or within, the recloser structure, it shall be considered in compliance with a) and b) above with a zero length control cable.

6.1.3 Grounding of device

All groundable parts of the recloser, and control apparatus where used, shall be grounded by a lead attached to the ground terminal and other groundable parts in a manner not to decrease the withstand voltage.

6.1.4 Power-frequency

The frequency of the power supply voltage shall be the rated value ± 5%, except that tests at 50 Hz or 60 Hz may be used to qualify for both rated power-frequencies.

6.1.5 Control voltage

The recloser/FI shall perform satisfactorily over the full range of control voltages specified in Table 7.

6.2 Insulation (dielectric) tests

Reclosers/FIs shall be capable of withstanding, without damage to the recloser/FI and associated control apparatus, if any, the following test voltages when tested in accordance with 6.1 and as follows.

Insulation tests of reclosers/FIs shall be performed only when the recloser/FI is completely isolated from all system voltages. Refer to 8.0 for field testing.

Copyright © 2003 IEEE. All rights reserved.

Copyright The Institute of Electrical and Electronics Engineers, Inc.
Provided by IHS under license with IEEE
No reproduction or networking permitted without license from IHS Not for Resale
[12:40 7/8/03 K:/SGML/ieee/C37.60-2003/Revises-III/C.37.60-2003.3d] Ref: C.37.60-2003 Page: 23 1–70

6.2.1 Withstand test voltages

6.2.1.1 Lightning impulse withstand test voltage

The lightning impulse withstand test voltage shall be a $1.2 \times 50\,\mu s$ voltage impulse in accordance with IEEE Std 4-1995. The peak value shall be as given in Column 3 of Table 1a) and Table 1b). At least three positive and three negative impulses shall be applied to the test device. If flashover occurs on only one test during any group of three consecutive tests, nine more tests of the same polarity shall be made. If the recloser/FI successfully withstands all nine of the second group of tests, the flashover in the first group shall be considered a random flashover and the recloser/FI shall be considered as having successfully passed the test. If an additional flashover occurs the recloser/FI shall be considered to have failed. An alternate test procedure described in IEC 60060-1-1989-11 may be used in which 15 impulses of each polarity are applied, with a maximum of two flashovers permitted.

The following tolerances shall apply during these tests, unless otherwise specified.

a) *Design tests.* Reclosers/FIs shall pass a full wave voltage impulse with:
   1) A virtual front time based on the rated full wave impulse voltage equal to or less than $1.2\,\mu s$,
   2) A peak voltage equal to or exceeding the peak value given in Column 3 of Table 1a) and Table 1b), and
   3) A time to the 50% value of the peak voltage equal to or greater than $50\,\mu s$.

b) *Conformance tests.* When lightning impulse withstand voltage tests are required for conformance tests, the recloser/FI shall be capable of passing a full wave impulse voltage test series with values and procedures as agreed to by the purchaser and the manufacturer subject to the following:
   1) Test procedures shall be in accordance with IEEE Std 4-1995.
   2) The recloser/FI shall not be expected to withstand a peak voltage that exceeds its rating.
   3) If, in the course of performing the conformance tests an individual, successful withstand test is performed that meets or exceeds the requirements of item a) of 6.2.1.1, it shall be counted as a withstand. However, an unsuccessful withstand under the same conditions shall not be counted as a failure.

NOTE—When the interrupting medium is a vacuum, there is a possibility that an open vacuum interrupter or vacuum gap will have random sparkovers of the open vacuum interrupter as much as 25% below the rated impulse withstand voltage of the recloser. Due to the unique characteristics of vacuum interrupters, the impulse current will pass through the open contacts without damage to the interrupter unit. An impulse sparkover of the open vacuum contacts may be followed by a flow of power current that will be interrupted without damage to the recloser.

6.2.1.2 Power-frequency withstand test voltage

Power-frequency withstand test voltages shall be applied with a peak value equal to 1.414 times the rated power-frequency withstand dry and wet test values given in Columns 4 and 5 of Table 1a) and Table 1b) with test durations of 60 s for the dry test and 10 s for the wet test. Wet tests shall be made in accordance with IEEE Std 4-1995. Wet tests shall not apply to reclosers/FIs utilizing submersible cables and terminations.

6.2.1.3 DC withstand test voltage

On reclosers/FIs using pad-mounted, dry vault, and submersible cable connectors, a dc withstand test shall be performed in addition to the power-frequency withstand test in 6.2.1.2. When used, the test voltage applied shall be the value given in Column 6 of Table 1b). DC or very low frequency test voltages are used on cables that still may be connected to the switchgear. This design test is included to verify that the switchgear can also withstand the same test voltage.

Copyright © 2003 IEEE. All rights reserved.

Copyright The Institute of Electrical and Electronics Engineers, Inc.
Provided by IHS under license with IEEE
No reproduction or networking permitted without license from IHS Not for Resale
[12:40 7/8/03 K:/SGML/ieee/C37.60-2003/Revises-III/C.37.60-2003.3d] Ref: C.37.60-2003 Page: 24 1–70

Refer to Clause 8 for a discussion on field tests.

The dc power source for the dc withstand test shall be capable of supplying a minimum of 10 mA before tripping out on overload. The test shall be considered to have failed if there is:

a) A leakage current of more than 10 mA, or
b) The test device is unable to withstand the voltage.

The test shall be considered to have passed if the test device withstands the test voltage with a leakage current that does not exceed 10 mA.

NOTE—These test criteria recognize the likelihood that a small leakage current may pass through an insulating medium, or across an insulating surface, while still supporting the high dc voltage. This is particularly true of vacuum interrupters.

6.2.2 Electrical connections

a) On overhead reclosers electrical connections shall be made by means of bare wire, inserted in each terminal. These bare wires shall project in such a manner as not to decrease the withstand value. Any necessary bends may be made at the terminals. The test lead connections shall be made to the wires projecting from the terminals.
b) On pad-mounted, submersible and dry vault reclosers/FIs connections shall be made through a cable termination similar to that for which the recloser/FI was designed. If terminations capable of meeting the specified dielectric voltage are not available, other terminations (bushing or connectors, or both) may be substituted for the purpose of performing these tests.

6.2.3 Points of application of test voltage

Tests 1, 2, 3, and 4 shall be made on three-pole reclosers/FIs. Tests 1 and 2 shall be made on single-pole reclosers/FIs.

Test 1: With the recloser/FI closed, and with tanks and groundable parts grounded, the test voltage shall be applied simultaneously to all of the terminals on one side of the recloser.

Test 2: With the recloser/FI open, the test voltage shall be applied simultaneously to the terminals on one side of the recloser. The other terminals, tanks and groundable parts shall be grounded. Then, reverse connections and repeat procedure.

Test 3: With the recloser/FI closed, the test voltage shall be applied to the middle phase of the recloser. The terminals of the other phases, all tanks and groundable parts shall be grounded.

Test 4: With the recloser/FI open, the test voltage shall be applied to the terminal on one side of the middle phase of the recloser. All other terminals, all tanks and groundable parts shall be grounded. Then, reverse the connections of the middle phase.

An alternate test procedure described in IEC 60694-2002-01, 6.2.5 may be used in which nine test conditions are described with the possibility of omitting some conditions if certain symmetry of design exists.

6.2.4 Temperature

Dielectric tests shall be made at the temperature attained under the conditions of commercial testing.

Copyright © 2003 IEEE. All rights reserved.

Copyright The Institute of Electrical and Electronics Engineers, Inc.
Provided by IHS under license with IEEE
No reproduction or networking permitted without license from IHS
Not for Resale
[12:40 7/8/03 K:/SGML/ieee/C37.60-2003/Revises-III/C.37.60-2003.3d] Ref: C.37.60-2003 Page: 25 1–70

6.2.5 Dielectric test procedures and voltage measurements

The dielectric test procedures and the methods of voltage measurement shall be in accordance with IEEE Std 4-1995 and IEEE Std 4a-2001.

6.3 Switching tests

Switching tests are related required capabilities of the recloser. The tests are performed to demonstrate the capability of the recloser/FI to interrupt all load currents up to and including the assigned rated continuous current. For the purposes of this section, load currents include the capacitive component of currents associated with line and cable charging and the magnetizing currents of unloaded transformers.

6.3.1 General

The switching abilities shall be stated in terms of

a) The test voltage
b) The test current
c) The test circuit
d) The number of operations

6.3.1.1 Condition of the recloser/FI to be tested

The recloser/FI shall be new or in good condition.

6.3.1.2 Single-phase and three-phase testing

Single-phase testing is not permitted for verification of three-phase switching performance.[8]

For three-phase tests, either the load neutral or the supply shall be grounded, but not both. If single-phase tests are made, a ground shall be placed on the test circuit.

6.3.1.3 Operating mode

Tests shall be made on a close-open duty cycle. An unspecified time may be allowed to elapse between making the circuit and breaking it. The recloser/FI may be allowed an unspecified time to cool between operations.

Reclosers/FIs with manual operation may be operated by remote control or power operating means, provided that an operating speed equivalent to that of the manual operator is obtained.

6.3.1.4 Test current

The current to be interrupted shall be symmetrical with negligible dc offset. The contacts of the recloser/FI shall not be separated until transient currents due to the making of the circuit have subsided.

For three-phase tests, the current is the average rms value of the currents interrupted in all poles. The three individual pole currents shall not vary more than 10% of the average value.

[8]This standard is limited in scope to rated maximum voltages of 38 kV and below. Most test laboratories can handle the switching test requirements of this standard without having to resort to single-phase testing for verification of three-phase performance.

Copyright © 2003 IEEE. All rights reserved.

Copyright The Institute of Electrical and Electronics Engineers, Inc.
Provided by IHS under license with IEEE
No reproduction or networking permitted without license from IHS Not for Resale
[12:40 7/8/03 K:/SGML/ieee/C37.60-2003/Revises-III/C.37.60-2003.3d] Ref: C.37.60-2003 Page: 26 1–70

The test current shall be equal to or greater than the rated value.

Table 9—Switching test duties

Test type	Number of operations	Test current
Load-switching	10	100% of rated continuous
Line-charging switching	20	100% of rated line-charging
Cable-charging switching	20	100% of rated cable-charging

6.3.1.5 Power-frequency test voltage

The power-frequency test voltage is the average of the phase-to-phase voltages, and shall be measured in the interval between 1 cycle and 1.5 cycles after the final phase arc-extinction. An acceptable alternate is the average of the phase-to-ground voltages multiplied by 1.732.

The test voltage in the case of three-phase tests on three-phase reclosers/FIs or on single-phase reclosers/FIs shall be equal to or greater than the rated maximum voltage of the recloser. The three individual phase voltages shall not vary more than 10% of the average value.

The rated power-frequency test voltage shall be maintained for at least 0.1 s after arc extinction.

6.3.1.6 Test sequence

Reclosers/FIs are likely to be called upon to switch any of the duties in Table 9 at any time throughout their life. All tests outlined in Table 9 shall be performed on the same recloser, without maintenance, and in any order except that the load-switching tests should be performed first.

Equipment repairs may be made where it can be demonstrated that such repairs would not influence the cumulative conditioning effects of previous tests in the design test sequence.

6.3.1.7 Condition of recloser/FI after switching test

After completion of the test sequence for all the switching test duties in Table 9, the recloser/FI shall meet the conditions outlined in 6.14.

6.3.2 Test duties

6.3.2.1 Load switching tests

The recloser/FI shall be capable of switching all load currents up to and including its rated load switching current in accordance with Table 9.

The test shall be conducted in accordance with IEEE Std 1247-1998, except that the test duty shall be as shown in Table 9 and as follows:

a) For three-phase tests: $$Z_s = 10\% \text{ to } 20\% \frac{(\text{rated maximum voltage})}{(\sqrt{3}\ \text{test current})} \quad (1)$$

b) For single-phase tests: $$Z_s = 10\% \text{ to } 20\% \frac{(\text{test voltage for single-phase test})}{(\text{test current})} \quad (2)$$

c) The "Test Current" in a) and b) above shall be the rated load switching current of the recloser/FI.
d) The source impedance X/R shall be between 5 and 7;
e) The specified TRV shall apply for rated current tests;

Copyright © 2003 IEEE. All rights reserved.

Copyright The Institute of Electrical and Electronics Engineers, Inc.
Provided by IHS under license with IEEE
No reproduction or networking permitted without license from IHS
Not for Resale
[12:40 7/8/03 K:/SGML/ieee/C37.60-2003/Revises-III/C.37.60-2003.3d] Ref: C.37.60-2003 Page: 27 1–70

f) The source side circuit and the TRV circuit control components shall remain constant (as in a, b, c, d, and e) for specified tests at less than rated current.

NOTE—In IEEE Std 1247-1998, the delta-connected circuit in Figure 1 and Figure 11 shows incorrectly the connection between the top-phase load and the bottom-phase load.

6.3.2.2 Line charging current and cable charging current interruption tests

6.3.2.2.1 Purpose

Line charging current interruption tests are applicable to all reclosers for switching unloaded three-phase overhead lines. Cable charging current interrupting tests are applicable to all reclosers/FIs for switching the charging current of unloaded lengths of single-phase shielded cables. Line and cable charging current interruption are related required capabilities of reclosers/FIs.

The tests are also applicable to the case of an overhead line in series with short lengths of cable. The purpose of these tests is to demonstrate the ability to interrupt the capacitive component of currents associated with the line and cable charging interrupting current ratings of the recloser.

NOTE—Cables are considered to be short if the total charging current does not exceed 20% of the overhead-line charging current, and the charging current of any cable adjacent to the recloser/FI does not exceed 10% of the overhead-line charging current. In any case, the total current shall not exceed the rated line charging interrupting current.

6.3.2.2.2 Line charging current test

The test shall be conducted in accordance with IEEE Std 1247-1998, except that the test duty shall be as shown in Table 9.

6.3.2.2.3 Cable charging current test

The recloser FI shall be capable of switching cable charging currents up to its rated cable charging switching current in accordance with Table 9. The test shall be conducted in accordance with IEEE Std 1247-1998, except as follows:

Tests on single-phase reclosers/FIs shall be made on a single-phase circuit, with the test voltage at the phase-to-neutral voltage corresponding to the rated maximum voltage shown in Column 2 of Table 5a), Table 5b) and Table 6.

The use of laboratory test circuits for verification of the rated cable charging switching current is an appropriate simulation of field performance if the switch is restrike-free. Currently available laboratory circuits may be used to demonstrate the interrupting performance for restriking devices, but they may not fully simulate field switching performance, especially in producing realistic field overvoltages when restriking occurs. For laboratory tests, the cables may be simulated by artificial circuits with lumped elements consisting of capacitors, reactors, and resistors. See IEEE Std 1247-1998, Figure 7 and Figure 8.

Overvoltages caused by restriking in the laboratory may be substantially greater than those experienced in the field.

NOTE—In IEEE Std 1247-1998, Figure 7 is incorrectly labeled as a single-phase test circuit; it is a three-phase test circuit. Furthermore, the test circuit should not have a ground at the wye point.

6.3.2.2.4 Performance

The peak transient overvoltage produced during a cable or line charging current breaking test will not exceed 2.5 times the peak line-to-ground voltage if the first pole to clear does not restrike. Recloser/FI performance is acceptable if it successfully interrupts the required capacitive currents where the peak transient overvoltage exceeds 2.5 per unit in no more that one out of 20 interruptions. The peak

 Copyright © 2003 IEEE. All rights reserved.

Copyright The Institute of Electrical and Electronics Engineers, Inc.
Provided by IHS under license with IEEE
No reproduction or networking permitted without license from IHS Not for Resale
[12:40 7/8/03 K:/SGML/ieee/C37.60-2003/Revises-III/C.37.60-2003.3d] Ref: C.37.60-2003 Page: 28 1–70

transient overvoltage for each test shall be measured between the recloser/FI disconnected terminals and ground. The transient overvoltage factor for each test shall then be calculated by dividing the peak transient voltage by the phase-to-ground peak value of the open circuit test voltage.

6.3.2.3 Transformer magnetizing current

It is assumed that a reclosers/FIs that has passed the load-switching and fault interrupting tests specified in 6.3.2.1 and 6.5 will also interrupt unloaded transformer magnetizing currents corresponding to a distribution transformer, rated 38 kV or less and also rated 2500 kVA or less; therefore, no tests are specified. Refer also to the discussion in IEEE Std 1247-1998 and 6.5.1.5.3 for more application information on this subject.

6.4 Making current capability

The standard operating duty tests in 6.5.4 and 6.5.5 provide proof of the ability to close and latch on the rated symmetrical interrupting current of the recloser.

6.5 Rated symmetrical interrupting current tests

6.5.1 General

6.5.1.1 Condition of the recloser to be tested

The recloser shall be new or in good condition.

6.5.1.2 Single-phase vs. three-phase testing

Three-phase testing is required for reclosers/FIs if all three poles operate from a common mechanism *or* if the interrupting medium would allow contamination from arcing between the phases during interruption. Conversely, if the three poles operate from independent mechanisms *and* the interrupting medium does not allow contamination from arcing between the phases during interruption, then single-phase testing is permitted.

If three-phase tests are made, when testing reclosers/FIs intended for application on multigrounded wye (Y) systems, both the source and load neutrals shall be grounded for one fourth of the unit operations specified in Column 6 of Table 5a), Table 5b), and Table 6. Otherwise for three-phase tests, either the load neutral or the supply shall be grounded, but not both. If single-phase tests are made, a ground shall be placed on the test circuit.

6.5.1.3 Test current

For three-phase tests, the current is the average rms value of the currents interrupted in all poles. The three individual pole currents shall not vary more than 10% of the average value. The current shall be calculated in accordance with IEEE Std C37.09-1999.

The test current shall be equal to or greater than the rated value.

6.5.1.4 Power-frequency test voltage

The power-frequency test voltage shall be calculated in accordance with IEEE Std C37.09-1999.

The test voltage in the case of three-phase tests on three-phase reclosers or on single-phase reclosers shall be equal to or greater than the rated maximum voltage of the recloser. The three individual phase voltages shall not vary more than 10% of the average value.

Copyright © 2003 IEEE. All rights reserved.

Copyright The Institute of Electrical and Electronics Engineers, Inc.
Provided by IHS under license with IEEE
No reproduction or networking permitted without license from IHS
Not for Resale
[12:40 7/8/03 K:/SGML/ieee/C37.60-2003/Revises-III/C.37.60-2003.3d] Ref: C.37.60-2003 Page: 29 1–70

6.5.1.5 Transient recovery voltage (TRV) related to the rated short-circuit breaking current

The transient recovery voltage (TRV) related to the rated short-circuit breaking current is the reference voltage that constitutes the limit of the prospective transient recovery voltage of circuits that the recloser/FI shall be capable of withstanding under fault conditions.

6.5.1.5.1 Representation of TRV waves

The waveform of transient recovery voltages varies according to the arrangement of actual circuits. In systems where reclosers are applied with a rated voltage up to 38 kV, the transient recovery voltage approximates to a damped single-frequency oscillation. This waveform is adequately represented by an envelope consisting of two line segments defined by means of two parameters, a voltage parameter and a time parameter. This envelope is the straight line boundary of a TRV with the 1-cosine wave shape produced by typical distribution circuits. Methods of drawing TRV envelopes are given in Annex C.

The influence of local capacitance on the source side of the circuit breaker produces a slower rate of rise of the voltage during the first few microseconds of the TRV. This is taken into account by introducing a time delay.

6.5.1.5.2 Representation of TRV

The following parameters are used for the representation of TRV:

a) Two-parameter reference line (see Figure 2):
u_c = reference voltage (TRV peak value), in kilovolts [Equation (3)];
t_3 = time to reach u_c, in microseconds.
TRV parameters are defined as a function of the rated voltage (U_r), the first-pole-to-clear factor (k_{pp}) and the amplitude factor (k_{af}) as follows:

$$u_c = k_{pp} \times k_{af} \times U_r \times \sqrt{2/3} \quad (3)$$

where
$k_{af} = 1.54$ for terminal fault,

u_c/t_3 = RRRV, the rate of rise of recovery voltage is specified as a function of the system voltage based on measurements from typical systems.

t_3 is derived from u_c and the specified value of the rate of rise u_c/t_3 = RRRV as $t_3 = u_c/\text{RRRV}$.

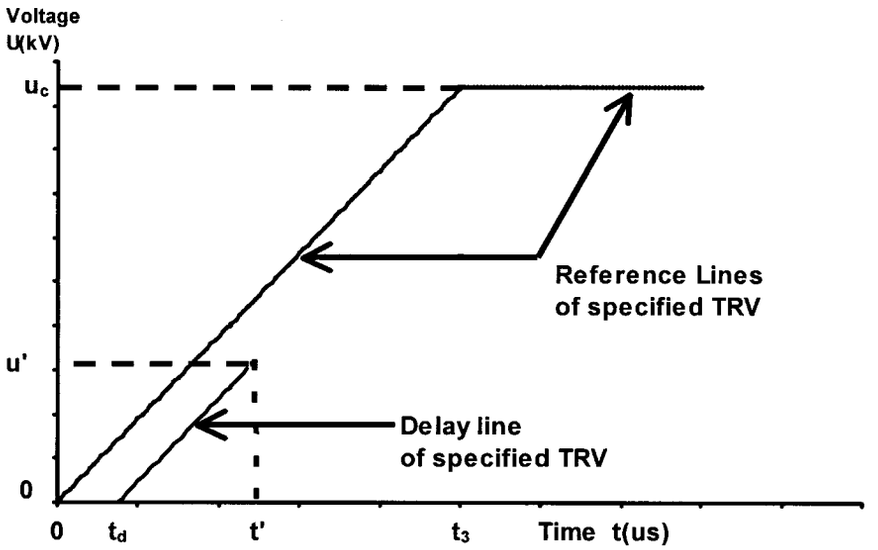

Figure 2—Representation of the specified TRV as a two-parameter line and a delay line

Copyright © 2003 IEEE. All rights reserved.

Copyright The Institute of Electrical and Electronics Engineers, Inc.
Provided by IHS under license with IEEE
No reproduction or networking permitted without license from IHS Not for Resale
[12:40 7/8/03 K:/SGML/ieee/C37.60-2003/Revises-III/C.37.60-2003.3d] Ref: C.37.60-2003 Page: 30 1–70

b) Delay line of TRV (see Figure 6):
t_d = time delay, in microseconds;
u' = reference voltage, in kilovolts;
t' = time to reach u', in microseconds.
The delay line starts on the time axis at the rated time delay t_d and runs parallel to the first section of the reference line of rated TRV and terminates at the voltage u' (time coordinate t').
$t_d = 0.15 \times t_3$, $u' = u_c/3$, and
t' is derived from u', u_c/t_3 and t_d according to Figure 6, $t' = t_d + u'/\text{RRRV}$.

6.5.1.5.3 Standard values of TRV related to the rated short-circuit breaking current

The standard values of TRV for reclosers/FI make use of the two parameters described in 6.5.1.5.2. Preferred values are given in Table 10a), Table 10b), Table 10c), Table 10d), Table 10e), and Table 10f) for the TRV peak values u_c, the TRV rate of rise of recovery voltage RRRV and the derived time to reach the TRV peak $t_3 = u_c/\text{RRRV}$. These parameters may be used for purposes of specification of TRV.

In Table 10a), Table 10b), Table 10c), Table 10d), Table 10e), and Table 10f) the terms T100, T50, and T20 are defined as the short-circuit test levels of 90–100%, 45–55%, and 15–20% of the rated short-circuit current, respectively.

The values given in the tables are prospective values for the test circuits. They apply to reclosers/FI for general distribution in three-phase systems having service frequencies of 50 Hz or 60 Hz and consisting of transformers, overhead lines and short lengths of cable or in cable-connected circuits as outlined in Table 10.

For three-pole reclosers/FIs where the interrupter contacts part simultaneously, the TRV values in the tables are for the first phase to clear a three-phase ungrounded fault. The first phase to clear factor of 1.5 is used making the voltage experienced by the first phase to clear equal to 1.5 times line to neutral voltage.

For single-pole reclosers/FI which are operated together, but where the interrupter contacts do not part simultaneously, the TRV values in the tables are still for the first phase to clear a three-phase ungrounded fault. However, since a first phase to clear factor of 1.732 is used, the voltage experienced by the first phase to clear is equal to 1.732 times line to neutral voltage, which is the full phase-to-phase

Table 10—Listing of tables describing TRV values under different rating conditions

Table	1 or 3 poles	Application	Type of device	Interrupting current
Table 10a)	3	Overhead-line connected circuits	Recloser	>4000 A
Table 10b)	1		Recloser	>4000 A
Table 10c)	3	Cable-connected circuits	Recloser	>4000 A
Table 10d)	1		Recloser	>4000 A
Table 10e)	3	Overhead-line and cable-connected circuits	Reclosers	≤4000 A
		Cable-connected circuits	Fault interrupters	All ratings
Table 10f)	1	Overhead-line and cable-connected circuits	Reclosers	≤4000 A
		cable-connected circuits	Fault interrupters	All ratings

Copyright © 2003 IEEE. All rights reserved.

Copyright The Institute of Electrical and Electronics Engineers, Inc.
Provided by IHS under license with IEEE
No reproduction or networking permitted without license from IHS Not for Resale
[12:40 7/8/03 K:/SGML/ieee/C37.60-2003/Revises-III/C.37.60-2003.3d] Ref: C.37.60-2003 Page: 31 1–70

Table 10a)—Standard values of prospective transient recovery voltage representation by two parameters for three-phase reclosers with rated fault currents >4000 A rms in overhead-line-connected circuits

Rated voltage	Test duty	First-pole-to-clear factor	Amplitude factor	TRV peak value	Time	Time delay	Voltage	Time	Rate of rise
U_r		k_{pp}	k_{af}	U_c	t_3	t_d	u'	t'	U_c/t_3
(kV)		(p.u.)	(p.u.)	(kV)	(μs)	(μs)	(kV)	(μs)	(kV/μs)
12	T100	1.5	1.54	22.6	29.4	4	7.5	14	0.77
12	T50	1.5	1.68	24.7	17.0	3	8.2	8	1.45
12	T20	1.5	1.77	26.0	11.8	2	8.7	6	2.21
15.5	T100	1.5	1.54	29.2	33.2	5	9.7	16	0.88
15.5	T50	1.5	1.68	31.9	19.3	3	10.6	9	1.65
15.5	T20	1.5	1.77	33.6	13.3	2	11.2	6	2.53
17.5	T100	1.5	1.54	33.0	35.1	5	11.0	17	0.94
17.5	T50	1.5	1.68	36.0	20.4	3	12.0	10	1.77
17.5	T20	1.5	1.77	38.0	14.1	2	12.7	7	2.70
24	T100	1.5	1.54	45.3	41.5	6	15.1	20	1.09
24	T50	1.5	1.68	49.3	24.1	4	16.4	12	2.05
24	T20	1.5	1.77	52.1	16.6	2	17.4	8	3.13
27	T100	1.5	1.54	50.9	44.7	7	17.0	22	1.14
27	T50	1.5	1.68	55.5	25.9	4	18.5	13	2.14
27	T20	1.5	1.77	58.6	17.9	3	19.5	9	3.27
36	T100	1.5	1.54	67.9	53.5	8	22.6	26	1.27
36	T50	1.5	1.68	74.0	31.0	5	24.7	15	2.39
36	T20	1.5	1.77	78.1	21.4	3	26.0	10	3.64
38	T100	1.5	1.54	71.7	55.4	8	23.9	27	1.29
38	T50	1.5	1.68	78.1	32.2	5	26.0	16	2.43
38	T20	1.5	1.77	82.4	22.3	3	27.5	11	3.70

Specified values in the table	Calculated values in the table
U_r = Rated voltage	U_c = TRV peak value
k_{pp} = First-pole-to-clear factor	$U_c = k_{pp} \times k_{af} \times \text{sqrt}(2/3) \times U_r$
$k_{pp} = 1.5$	$U_c = k_{pp} \times k_{af} \times 0.8165 \times U_r$
k_{af} = Amplitude factor	t_3 = Time to U_c
$k_{af}(\text{T100}) = \text{Specified} = 1.54$	$t_3 = U_c / \text{RRRV}$
$k_{af}(\text{T50}) = k_{af}(\text{T100}) \times 1.09 = 1.68$	t_d = Time delay for the delay line
$k_{af}(\text{T20}) = k_{af}(\text{T100}) \times 1.15 = 1.77$	$t_d = 0.15 \times t_3$
RRRV = Rate of rise of recovery voltage	u' = Voltage point for the delay line
RRRV(T100) = Specified	$u' = U_c/3$
RRRV(T50) = RRRV(T100) × 1.88	t' = Time to u'
RRRV(T20) = RRRV(T100) × 2.87	$t' = t_d + u'/\text{RRRV}$

NOTE—The TRV values are calculated for ungrounded systems and they cover grounded systems as well.

Copyright © 2003 IEEE. All rights reserved.

Copyright The Institute of Electrical and Electronics Engineers, Inc.
Provided by IHS under license with IEEE
No reproduction or networking permitted without license from IHS
Not for Resale
[12:40 7/8/03 K:/SGML/ieee/C37.60-2003/Revises-III/C.37.60-2003.3d] Ref: C.37.60-2003 Page: 32 1–70

Table 10b)—Standard values of prospective transient recovery voltage representation by two parameters for single-phase reclosers with rated fault currents >4000 A rms in overhead-line-connected circuits

Rated voltage	Test duty	First-pole-to-clear factor	Amplitude factor	TRV peak value	Time	Time delay	Voltage	Time	Rate of rise
U_r		k_{pp}	k_{af}	U_c	t_3	t_d	u'	t'	U_c/t_3
(kV)		(p.u.)	(p.u.)	(kV)	(μs)	(μs)	(kV)	(μs)	(kV/μs)
12	T100	1.732	1.54	26.1	33.9	5	8.7	16	0.77
12	T50	1.732	1.68	28.5	19.7	3	9.5	10	1.45
12	T20	1.732	1.77	30.1	13.6	2	10.0	7	2.21
15.5	T100	1.732	1.54	33.8	38.4	6	11.3	19	0.88
15.5	T50	1.732	1.68	36.8	22.2	3	12.3	11	1.65
15.5	T20	1.732	1.77	38.8	15.4	2	12.9	7	2.53
17.5	T100	1.732	1.54	38.1	40.5	6	12.7	20	0.94
17.5	T50	1.732	1.68	41.5	23.5	4	13.8	11	1.77
17.5	T20	1.732	1.77	43.8	16.2	2	14.6	8	2.70
24	T100	1.732	1.54	52.3	48.0	7	17.4	23	1.09
24	T50	1.732	1.68	57.0	27.8	4	19.0	13	2.05
24	T20	1.732	1.77	60.1	19.2	3	20.0	9	3.13
27	T100	1.732	1.54	58.8	51.6	8	19.6	25	1.14
27	T50	1.732	1.68	64.1	29.9	4	21.4	14	2.14
27	T20	1.732	1.77	67.6	20.7	3	22.5	10	3.27
36	T100	1.732	1.54	78.4	61.7	9	26.1	30	1.27
36	T50	1.732	1.68	85.5	35.8	5	28.5	17	2.39
36	T20	1.732	1.77	90.2	24.7	4	30.1	12	3.64
38	T100	1.732	1.54	82.8	64.2	10	27.6	31	1.29
38	T50	1.732	1.68	90.2	37.2	6	30.1	18	2.43
38	T20	1.732	1.77	95.2	25.7	4	31.7	12	3.70

Specified values in the table	Calculated values in the table
U_r = Rated voltage	U_c = TRV peak value
k_{pp} = First-pole-to-clear factor	$U_c = k_{pp} \times k_{af} \times \text{sqrt}(2/3) \times U_r$
$k_{pp} = 1.732$	$U_c = k_{pp} \times k_{af} \times 0.8165 \times U_r$
k_{af} = Amplitude factor	t_3 = Time to U_c
$k_{af}(\text{T100}) = \text{Specified} = 1.54$	$t_3 = U_c / \text{RRRV}$
$k_{af}(\text{T50}) = k_{af}(\text{T100}) \times 1.09 = 1.68$	t_d = Time delay for the delay line
$k_{af}(\text{T20}) = k_{af}(\text{T100}) \times 1.15 = 1.77$	$t_d = 0.15 \times t_3$
RRRV = Rate of rise of recovery voltage	u' = Voltage point for the delay line
RRRV(T100) = Specified	$u' = U_c/3$
RRRV(T50) = RRRV(T100) × 1.88	t' = Time to u'
RRRV(T20) = RRRV(T100) × 2.87	$t' = t_d + u'/\text{RRRV}$

NOTE—The TRV values are calculated for ungrounded systems and they cover grounded systems as well.

Copyright © 2003 IEEE. All rights reserved.

Copyright The Institute of Electrical and Electronics Engineers, Inc.
Provided by IHS under license with IEEE
No reproduction or networking permitted without license from IHS
Not for Resale
[12:40 7/8/03 K:/SGML/ieee/C37.60-2003/Revises-III/C.37.60-2003.3d] Ref: C.37.60-2003 Page: 33 1–70

Table 10c)—Standard values of prospective transient recovery voltage representation by two parameters for three-phase reclosers with rated fault currents >4000 A rms in cable-connected systems

Rated voltage	Test duty	First-pole-to-clear factor	Amplitude factor	TRV peak value	Time	Time delay	Voltage	Time	Rate of rise
U_r		k_{pp}	k_{af}	U_c	t_3	t_d	u'	t'	U_c/t_3
(kV)		(p.u.)	(p.u.)	(kV)	(μs)	(μs)	(kV)	(μs)	(kV/μs)
12	T100	1.5	1.54	22.6	59.6	9	7.5	29	0.38
12	T50	1.5	1.68	24.7	34.5	5	8.2	17	0.71
12	T20	1.5	1.77	26.0	23.9	4	8.7	12	1.09
15.5	T100	1.5	1.54	29.2	66.4	10	9.7	32	0.44
15.5	T50	1.5	1.68	31.9	38.5	6	10.6	19	0.83
15.5	T20	1.5	1.77	33.6	26.6	4	11.2	13	1.26
17.5	T100	1.5	1.54	33.0	70.2	11	11.0	34	0.47
17.5	T50	1.5	1.68	36.0	40.7	6	12.0	20	0.88
17.5	T20	1.5	1.77	38.0	28.1	4	12.7	14	1.35
24	T100	1.5	1.54	45.3	83.8	13	15.1	41	0.54
24	T50	1.5	1.68	49.3	48.6	7	16.4	23	1.02
24	T20	1.5	1.77	52.1	33.6	5	17.4	16	1.55
27	T100	1.5	1.54	50.9	89.3	13	17.0	43	0.57
27	T50	1.5	1.68	55.5	51.8	8	18.5	25	1.07
27	T20	1.5	1.77	58.6	35.8	5	19.5	17	1.64
36	T100	1.5	1.54	67.9	107.8	16	22.6	52	0.63
36	T50	1.5	1.68	74.0	62.5	9	24.7	30	1.18
36	T20	1.5	1.77	78.1	43.2	6	26.0	21	1.81
38	T100	1.5	1.54	71.7	110.3	17	23.9	53	0.65
38	T50	1.5	1.68	78.1	63.9	10	26.0	31	1.22
38	T20	1.5	1.77	82.4	44.2	7	27.5	21	1.87

Specified values in the table	Calculated values in the table
U_r = Rated voltage	U_c = TRV peak value
k_{pp} = First-pole-to-clear factor	$U_c = k_{pp} \times k_{af} \times \text{sqrt}(2/3) \times U_r$
$k_{pp} = 1.5$	$U_c = k_{pp} \times k_{af} \times 0.8165 \times U_r$
k_{af} = Amplitude factor	t_3 = Time to U_c
$k_{af}(\text{T100}) = \text{Specified} = 1.54$	$t_3 = U_c / \text{RRRV}$
$k_{af}(\text{T50}) = k_{af}(\text{T100}) \times 1.09 = 1.68$	t_d = Time delay for the delay line
$k_{af}(\text{T20}) = k_{af}(\text{T100}) \times 1.15 = 1.77$	$t_d = 0.15 \times t_3$
RRRV = Rate of rise of recovery voltage	u' = Voltage point for the delay line
RRRV(T100) = Specified = 0.5 × RRRV overhead lines	$u' = U_c/3$
RRRV(T50) = RRRV(T100) × 1.88	t' = Time to u'
RRRV(T20) = RRRV(T100) × 2.87	$t' = t_d + u'/\text{RRRV}$

NOTE—The TRV values are calculated for ungrounded systems and they cover grounded systems as well.

Copyright © 2003 IEEE. All rights reserved.

Copyright The Institute of Electrical and Electronics Engineers, Inc.
Provided by IHS under license with IEEE
No reproduction or networking permitted without license from IHS Not for Resale
[12:41 7/8/03 K:/SGML/ieee/C37.60-2003/Revises-III/C.37.60-2003.3d] Ref: C.37.60-2003 Page: 34 1–70

Table 10d)—Standard values of prospective transient recovery voltage representation by two parameters for single-phase reclosers with rated fault currents >4000 A rms in cable-connected systems

Rated voltage	Test duty	First-pole-to-clear factor	Amplitude factor	TRV peak value	Time	Time delay	Voltage	Time	Rate of rise
U_r		k_{pp}	k_{af}	U_c	t_3	t_d	u'	t'	U_c/t_3
(kV)		(p.u.)	(p.u.)	(kV)	(μs)	(μs)	(kV)	(μs)	(kV/μs)
12	T100	1.732	1.54	26.1	68.8	10	8.7	33	0.38
12	T50	1.732	1.68	28.5	39.9	6	9.5	19	0.71
12	T20	1.732	1.77	30.1	27.6	4	10.0	13	1.09
15.5	T100	1.732	1.54	33.8	76.7	12	11.3	37	0.44
15.5	T50	1.732	1.68	36.8	44.5	7	12.3	21	0.83
15.5	T20	1.732	1.77	38.8	30.7	5	12.9	15	1.26
17.5	T100	1.732	1.54	38.1	81.1	12	12.7	39	0.47
17.5	T50	1.732	1.68	41.5	47.0	7	13.8	23	0.88
17.5	T20	1.732	1.77	43.8	32.5	5	14.6	16	1.35
24	T100	1.732	1.54	52.3	96.8	15	17.4	47	0.54
24	T50	1.732	1.68	57.0	56.1	8	19.0	27	1.02
24	T20	1.732	1.77	60.1	38.8	6	20.0	19	1.55
27	T100	1.732	1.54	58.8	103.2	15	19.6	50	0.57
27	T50	1.732	1.68	64.1	59.8	9	21.4	29	1.07
27	T20	1.732	1.77	67.6	41.3	6	22.5	20	1.64
36	T100	1.732	1.54	78.4	124.4	19	26.1	60	0.63
36	T50	1.732	1.68	85.5	72.2	11	28.5	35	1.18
36	T20	1.732	1.77	90.2	49.9	7	30.1	24	1.81
38	T100	1.732	1.54	82.8	127.3	19	27.6	62	0.65
38	T50	1.732	1.68	90.2	73.8	11	30.1	36	1.22
38	T20	1.732	1.77	95.2	51.0	8	31.7	25	1.87

Specified values in the table	Calculated values in the table
U_r = Rated voltage	U_c = TRV peak value
k_{pp} = First-pole-to-clear factor	$U_c = k_{pp} \times k_{af} \times \text{sqrt}(2/3) \times U_r$
$k_{pp} = 1.732$	$U_c = k_{pp} \times k_{af} \times 0.8165 \times U_r$
k_{af} = Amplitude factor	t_3 = Time to U_c
$k_{af}(\text{T100}) = \text{Specified} = 1.54$	$t_3 = U_c / \text{RRRV}$
$k_{af}(\text{T50}) = k_{af}(\text{T100}) \times 1.09 = 1.68$	t_d = Time delay for the delay line
$k_{af}(\text{T20}) = k_{af}(\text{T100}) \times 1.15 = 1.77$	$t_d = 0.15 \times t_3$
RRRV = Rate of rise of recovery voltage	u' = Voltage point for the delay line
RRRV(T100) = Specified = 0.5 × RRRV overhead lines	$u' = U_c/3$
RRRV(T50) = RRRV(T100) × 1.88	t' = Time to u'
RRRV(T20) = RRRV(T100) × 2.87	$t' = t_d + u' / \text{RRRV}$

NOTE—The TRV values are calculated for ungrounded systems and they cover grounded systems as well.

Copyright © 2003 IEEE. All rights reserved.

Copyright The Institute of Electrical and Electronics Engineers, Inc.
Provided by IHS under license with IEEE
No reproduction or networking permitted without license from IHS
Not for Resale
[12:41 7/8/03 K:/SGML/ieee/C37.60-2003/Revises-III/C.37.60-2003.3d] Ref: C.37.60-2003 Page: 35 1–70

Table 10e)—Standard values of prospective transient recovery voltage representation by two parameters for three-phase reclosers with rated fault currents ≤4000 A rms in both overhead and cable-connected systems and three-phase fault interrupters of all interrupting ratings in cable-connected systems

Rated voltage	Test duty	First-pole-to-clear factor	Amplitude factor	TRV peak value	Time	Time delay	Voltage	Time	Rate of rise
U_r		k_{pp}	k_{af}	U_c	t_3	t_d	u'	t'	U_c/t_3
(kV)		(p.u.)	(p.u.)	(kV)	(μs)	(μs)	(kV)	(μs)	(kV/μs)
12	T100	1.5	1.54	22.6	117.6	18	7.5	57	0.193
12	T50	1.5	1.54	22.6	117.6	18	7.5	57	0.193
12	T20	1.5	1.54	22.6	117.6	18	7.5	57	0.193
15.5	T100	1.5	1.54	29.2	132.9	20	9.7	64	0.220
15.5	T50	1.5	1.54	29.2	132.9	20	9.7	64	0.220
15.5	T20	1.5	1.54	29.2	132.9	20	9.7	64	0.220
17.5	T100	1.5	1.54	33.0	140.5	21	11.0	68	0.235
17.5	T50	1.5	1.54	33.0	140.5	21	11.0	68	0.235
17.5	T20	1.5	1.54	33.0	140.5	21	11.0	68	0.235
24	T100	1.5	1.54	45.3	166.1	25	15.1	80	0.273
24	T50	1.5	1.54	45.3	166.1	25	15.1	80	0.273
24	T20	1.5	1.54	45.3	166.1	25	15.1	80	0.273
27	T100	1.5	1.54	50.9	186.9	28	17.0	90	0.273
27	T50	1.5	1.54	50.9	186.9	28	17.0	90	0.273
27	T20	1.5	1.54	50.9	186.9	28	17.0	90	0.273
36	T100	1.5	1.54	67.9	213.9	32	22.6	103	0.318
36	T50	1.5	1.54	67.9	213.9	32	22.6	103	0.318
36	T20	1.5	1.54	67.9	213.9	32	22.6	103	0.318
38	T100	1.5	1.54	71.7	222.2	33	23.9	107	0.323
38	T50	1.5	1.54	71.7	222.2	33	23.9	107	0.323
38	T20	1.5	1.54	71.7	222.2	33	23.9	107	0.323

Specified values in the table	Calculated values in the table
U_r = Rated voltage	U_c = TRV peak value
k_{pp} = First-pole-to-clear factor	$U_c = k_{pp} \times k_{af} \times \text{sqrt}(2/3) \times U_r$
$k_{pp} = 1.5$	$U_c = k_{pp} \times k_{af} \times 0.8165 \times U_r$
k_{af} = Amplitude factor	t_3 = Time to U_c
$k_{af}(\text{T100}) = \text{Specified} = 1.54$	$t_3 = U_c/\text{RRRV}$
$k_{af}(\text{T50}) = k_{af}(\text{T100}) \times 1.09 = 1.68$	t_d = Time delay for the delay line
$k_{af}(\text{T20}) = k_{af}(\text{T100}) \times 1.15 = 1.77$	$t_d = 0.15 \times t_3$
RRRV = Rate of rise of recovery voltage	u' = Voltage point for the delay line
RRRV(T100) = Specified = 0.25 × RRRV overhead lines	$u' = U_c/3$
RRRV(T50) = RRRV(T100) × 1.88	t' = Time to u'
RRRV(T20) = RRRV(T100) × 2.87	$t' = t_d + u'/\text{RRRV}$

NOTE—The TRV values are calculated for ungrounded systems and they cover grounded systems as well.

Copyright © 2003 IEEE. All rights reserved.

Copyright The Institute of Electrical and Electronics Engineers, Inc.
Provided by IHS under license with IEEE
No reproduction or networking permitted without license from IHS Not for Resale
[12:41 7/8/03 K:/SGML/ieee/C37.60-2003/Revises-III/C.37.60-2003.3d] Ref: C.37.60-2003 Page: 36 1–70

Table 10f)—Standard values of prospective transient recovery voltage representation by two parameters for single-phase reclosers with rated fault currents ≤4000 A rms in both overhead and cable connected systems and single-phase fault interrupters of all interrupting ratings in cable-connected systems

Rated voltage	Test duty	First-pole-to-clear factor	Amplitude factor	TRV peak value	Time	Time delay	Voltage	Time	Rate of rise
U_r		k_{pp}	k_{af}	U_c	t_3	t_d	u'	t'	U_c/t_3
(kV)		(p.u.)	(p.u.)	(kV)	(μs)	(μs)	(kV)	(μs)	(kV/μs)
12	T100	1.732	1.54	26.1	135.8	20	8.7	66	0.193
12	T50	1.732	1.54	26.1	135.8	20	8.7	66	0.193
12	T20	1.732	1.54	26.1	135.8	20	8.7	66	0.193
15.5	T100	1.732	1.54	33.8	153.4	23	11.3	74	0.220
15.5	T50	1.732	1.54	33.8	153.4	23	11.3	74	0.220
15.5	T20	1.732	1.54	33.8	153.4	23	11.3	74	0.220
17.5	T100	1.732	1.54	38.1	162.2	24	12.7	78	0.235
17.5	T50	1.732	1.54	38.1	162.2	24	12.7	78	0.235
17.5	T20	1.732	1.54	38.1	162.2	24	12.7	78	0.235
24	T100	1.732	1.54	52.3	191.8	29	17.4	93	0.273
24	T50	1.732	1.54	52.3	191.8	29	17.4	93	0.273
24	T20	1.732	1.54	52.3	191.8	29	17.4	93	0.273
27	T100	1.732	1.54	58.8	215.8	32	19.6	104	0.273
27	T50	1.732	1.54	58.8	215.8	32	19.6	104	0.273
27	T20	1.732	1.54	58.8	215.8	32	19.6	104	0.273
36	T100	1.732	1.54	78.4	246.9	37	26.1	119	0.318
36	T50	1.732	1.54	78.4	246.9	37	26.1	119	0.318
36	T20	1.732	1.54	78.4	246.9	37	26.1	119	0.318
38	T100	1.732	1.54	82.8	256.6	38	27.6	124	0.323
38	T50	1.732	1.54	82.8	256.6	38	27.6	124	0.323
38	T20	1.732	1.54	82.8	256.6	38	27.6	124	0.323

Specified values in the table	Calculated values in the table
U_r = Rated voltage	U_c = TRV peak value
k_{pp} = First-pole-to-clear factor	$U_c = k_{pp} \times k_{af} \times \text{sqrt}(2/3) \times U_r$
$k_{pp} = 1.5$	$U_c = k_{pp} \times k_{af} \times 0.8165 \times U_r$
k_{af} = Amplitude factor	t_3 = Time to U_c
$k_{af}(\text{T100}) = \text{Specified} = 1.54$	$t_3 = U_c / \text{RRRV}$
$k_{af}(\text{T50}) = k_{af}(\text{T100}) \times 1.09 = 1.68$	t_d = Time delay for the delay line
$k_{af}(\text{T20}) = k_{af}(\text{T100}) \times 1.15 = 1.77$	$t_d = 0.15 \times t_3$
RRRV = Rate of rise of recovery voltage	u' = Voltage point for the delay line
RRRV(T100) = Specified = 0.25 × RRRV overhead lines	$u' = U_c/3$
RRRV(T50) = RRRV(T100) × 1.88	t' = Time to u'
RRRV(T20) = RRRV(T100) × 2.87	$t' = t_d + u'/\text{RRRV}$

NOTE—The TRV values are calculated for ungrounded systems and they cover grounded systems as well.

Copyright © 2003 IEEE. All rights reserved.

Copyright The Institute of Electrical and Electronics Engineers, Inc.
Provided by IHS under license with IEEE
No reproduction or networking permitted without license from IHS
Not for Resale
[12:41 7/8/03 K:/SGML/ieee/C37.60-2003/Revises-III/C.37.60-2003.3d] Ref: C.37.60-2003 Page: 37 1–70

voltage. This accounts for the fact that with a large separation in the times at which the interrupters open, the worst case is that one interrupter sees the full phase-to-phase voltage.

For actual single-phase operation with a single-pole recloser/FI, the circuit is typically connected from phase to neutral. In this case, the first phase to clear factor of 1.0 is used making the voltage experienced by the first phase to clear equal to 1.0 times line to neutral voltage.

For reclosers where the rated short-circuit breaking current is >4000 A rms, and the recloser is applied in circuits connected by overhead lines, the TRV values are essentially the same as those specified in the power circuit breaker standards IEEE Std C37.04-1999 and ANSI C37.06.1-2000. TRV values for these applications are covered in Table 10a) and Table 10b).

For reclosers where the rated short-circuit breaking current is >4000 A rms, but the recloser is applied in circuits connected by cables, the TRV values have RRRV values that are half those for overhead-line applications. The added capacitance of the cables slows down the TRV. TRV values for these applications are covered in Table 10c) and Table 10d).

For reclosers where the rated short-circuit breaking current is ≤4000 A rms, and where the recloser is applied in circuits connected by either overhead lines or cables, the TRV values have RRRV values that are a quarter of those for applications where the rated short-circuit breaking current is >4000 A rms, and the recloser is applied in circuits connected by overhead lines. The RRRV values for applications where the rated short-circuit breaking current is ≤4000 A rms are derived from the fuse standard IEEE Std C37.41-2000. The TRV values for these applications are covered in Table 10e) and Table 10f).

For fault interrupters of all interrupting ratings, the TRV values in Table 10e) and Table 10f) shall apply based on a cable-connected circuit.

In the cases where a recloser or a fault interrupter is used in an installation having more severe conditions, the values may be different, particularly for the case where the recloser is directly connected to the low side of a transformer where a fault on the secondary side provides approximately 50% or more of the rated short-circuit breaking current of the recloser and without appreciable additional capacitance between the recloser and the transformer or fault. Reference ANSI C37.06.1-2000.

The transient recovery voltage corresponding to the rated short-circuit breaking current when a terminal fault occurs, is used for testing at short-circuit breaking currents equal to the rated value. However, for testing at short-circuit breaking currents less than 100% of the rated value, the TRV reaches a higher peak value and has a faster RRRV. The other values of transient recovery voltage at short-circuit breaking currents less than 100% of the rated value are also specified in the tables.

6.5.2 Interrupting performance (automatic operation)

Reclosers when tested according to 6.1 and as follows shall be capable of interrupting, automatically, all currents from a value equal to the lowest minimum trip setting up to and including the rated symmetrical interrupting currents shown in Table 5a), Table 5b), and Table 6.

a) At any degree of asymmetry corresponding to the X/R values given in Columns 5, 7, and 9 of Table 5a), Table 5b), and Table 6. For currents other than tabulated, the minimum X/R values shall be determined by interpolation or extrapolation.
b) At a test voltage such that the power-frequency recovery voltage is at least:
    1) For single-phase reclosers, the rated maximum voltage.
    2) For three-phase tests on three-phase reclosers, the rated maximum voltage.

Copyright © 2003 IEEE. All rights reserved.

Copyright The Institute of Electrical and Electronics Engineers, Inc.
Provided by IHS under license with IEEE
No reproduction or networking permitted without license from IHS Not for Resale
[12:41 7/8/03 K:/SGML/ieee/C37.60-2003/Revises-III/C.37.60-2003.3d] Ref: C.37.60-2003 Page: 38 1–70

c) With TRV values as shown in Table 10 except for three-phase tests where both the source and load are grounded, in which case the TRV peak shall be 0.667 times the values listed in the tables (see 6.5.1.2).
d) At the minimum control voltage for which a shunt-trip recloser is designed, except that this provision does not apply to electronic controls with self-contained dc power sources.
e) With either terminal connected to the line conductor unless the line and load terminals are identified on the device such as a potential closing coil device. In this case the source side must be connected to the source voltage.

Test reports shall record the actual inherent TRV values of the test circuit along with the voltage and current values of each individual test operation. See note below.

NOTE—Test laboratories may not be able to meet the small values of t_3 at the T20 current levels given in Table 10a) and Table 10b). The shortest time that can be met should be used but not less than the value specified. The values used shall be stated in the test report.

6.5.3 Verification of rated symmetrical interrupting current

The standard operating duty test as specified in 6.5.4 shall be the basis for verification of the rated symmetrical interrupting current provided all requirements of 6.5.2 are fulfilled and at least two interruptions are performed with the initial current loop having maximum asymmetry as determined by the appropriate multiplying factor for the X/R value in Column 9 of Table 5a), Table 5b), and Table 6. Refer to Annex A. If two such interruptions are not obtained in the operating duty tests, additional tests as specified in 6.5.2 shall be made but not necessarily on the same recloser.

6.5.4 Standard operating duty test; automatic operation

6.5.4.1 Test conditions

The standard operating duty test shall consist of the total number of unit operations as given in Column 11 of Table 5a), Table 5b), and Table 6 and as apportioned in Columns 6, 8, and 10 of Table 5a), Table 5b), and Table 6 without maintenance during the test.

For the operations required in Column 10 (90–100% current level) of Table 5a), Table 5b), and Table 6, at least one fast[9] opening followed by one time-delayed opening shall be at a current not less than rated symmetrical interrupting current.

The recloser shall be adjusted to give the maximum permissible number of unit operations, including at least one fast and time-delayed opening, before the lockout operation occurs. If the reclosing intervals are adjustable, these shall be set for the minimum reclosing intervals for which the recloser is designed but not faster than the recommendations given in the manufacturer's operating instructions.

The X/R ratio of the test circuit shall not be less than that given in Columns 5, 7, or 9 of Table 5a), Table 5b), and Table 6.

The test circuit shall be capable of providing inherent TRV values as shown in Table 10a), Table 10b), Table 10c), Table 10d), Table 10e), and Table 10f). These TRV values are based on the inherent characteristics of the test circuit, unmodified by the recloser interrupter. At the 100% test current level, the TRV values shall be no less severe than described in Table 10a), Table 10b), Table 10c), Table 10d), Table 10e), and Table 10f). The power-frequency recovery voltage shall not fall below the maximum

[9]The term *fast* implies that no intentional delay is added by the control. For additional information, see footnote to 6.11.3.

Copyright © 2003 IEEE. All rights reserved.

Copyright The Institute of Electrical and Electronics Engineers, Inc.
Provided by IHS under license with IEEE
No reproduction or networking permitted without license from IHS Not for Resale
[12:41 7/8/03 K:/SGML/ieee/C37.60-2003/Revises-III/C.37.60-2003.3d] Ref: C.37.60-2003 Page: 39 1–70

rated voltages as given in Column 2 of Table 5a), 5b), and 6, and shall be held for 1 s after final interruption.

6.5.4.2 Test procedure

Power shall be applied to the recloser when in the closed position and then the recloser shall open and reclose until the lockout position is reached. This series of operations shall be repeated a sufficient number of times to obtain the number of unit operations specified in Columns 6, 8, and 10 of Table 5a), Table 5b), and Table 6.

Power initiation for each series of operations to lockout shall be timed to produce maximum offset[10] in the first loop of current with random timing permissible on subsequent closings of each series.

The initial loop of current of each series shall show maximum offset of no less than 90% of the offset corresponding to the X/R ratio specified by the table. In addition, at least one series shall have an offset that is at least 100% of the offset corresponding to the X/R ratio specified by the table. The asymmetrical current value used to demonstrate the offset shall be measured at the peak of the current, and the symmetrical current shall be measured a half cycle prior to contact separation for each unit operation.

6.5.5 Operating duty test; nonreclosing fault interrupters

The operating duty test shall consist of the total number of operations as given in Column 11 of Table 6, and as apportioned in Columns 6, 8, and 10 of Table 6 without maintenance during the test. One third of the operations shall be performed on a close–open operating sequence. Closing may be random except that at least one maximum offset in the first loop of current at a current equal to the rated symmetrical interrupting current shall occur.

6.5.6 Condition of recloser/FI after operating duty test

After completion of the test sequence for the operating duty test in 6.5.4 and 6.5.5, the recloser/FI shall meet the conditions outlined in 6.14.

6.6 Minimum tripping current tests

Reclosers shall meet the rated minimum tripping current within the specified limits of $\pm 10\%$ when tested as specified in 6.1 and as follows.

6.6.1 Test circuit

The recloser/FI shall be connected to a low-voltage power source of alternating current with a means for raising the current through the recloser.

6.6.2 Test procedures

With the recloser/FI set for an instantaneous trip, quickly inject a current through the recloser/FI that will cause a value of approximately 80% of the anticipated minimum tripping current to flow.

[10]Maximum offset in the first loop shall be considered obtained in a circuit with the specified short-circuit power factor, or X/R ratio, if power is initiated at voltage zero with an allowable deviation of ± 10 electrical degrees.

Copyright © 2003 IEEE. All rights reserved.

Copyright The Institute of Electrical and Electronics Engineers, Inc.
Provided by IHS under license with IEEE
No reproduction or networking permitted without license from IHS Not for Resale
[12:41 7/8/03 K:/SGML/ieee/C37.60-2003/Revises-III/C.37.60-2003.3d] Ref: C.37.60-2003 Page: 40 1–70

Then raise the current slowly at a rate requiring at least 10 s to reach the nominal minimum tripping current. Continue increasing the current at the same rate until the recloser/FI operates, as indicated by the cessation of current. The maximum current reached is the minimum trip current.

6.7 Partial discharge (corona) tests

Partial discharge tests shall be performed on all reclosers/FIs that use a nonrestoring dielectric as the primary insulation (e.g., solid dielectric). These tests shall be performed in accordance with IEEE Std 1291-1993. The minimum detection sensitivity for which these tests are conducted shall be 10 pC.

6.7.1 Test voltages and limits

The test voltage shall be 105% of the line-to-ground voltage corresponding to the rated maximum voltage of the recloser/FI. Reclosers/FIs having two or more voltage ratings shall be tested on the basis of the highest voltage rating given on the nameplate.

Partial discharge limits have not been established. The purpose of this design test is to establish a standard test procedure and gather benchmark data for the use of both producers and users of the equipment. It is anticipated that this data will provide guidance for future revisions to the standard. See note.

NOTE—There is general agreement that partial discharge testing should be performed on all reclosers/FIs where the primary insulating system may be subject to deterioration due to partial discharge. At a minimum, the data will help to monitor process consistency by the producer and serviceability for the user. Three reasons have been given for not setting partial discharge test limits at this time: first, there is not a sufficient body of evidence to establish a cause–effect relationship between partial discharge and performance in distribution switchgear; second, there is not an agreement as to what the limits should be; and third, appropriate values will depend on the materials, design, and complexity of the equipment. Partial discharge limits at the test voltage specified in 6.7.1 have been suggested in the 10 pC to 20 pC range for a phase or module tested alone. At the upper end, a partial discharge limit of 100 pC has been recommended for a complete three-phase assembly. The 100 pC value is consistent with the CSA C22.2 No. 31-1989 [B2].

6.7.2 Conditioning of test sample

The surface of insulators should be clean and dry. The test object should also be at ambient temperature. Mechanical, thermal, or electrical stressing before the test should be avoided.

6.7.3 Test equipment and procedure

The equipment and general method used in making partial discharge measurement tests shall be in accordance with the recommendations of IEEE Std 1291-1993 or IEC 60270-2000-12.

Tests shall be made with the recloser/FI or test module in the closed and open positions. All surfaces that are normally grounded shall be grounded and all surfaces isolated that are normally isolated.

NOTE—An open gap in a vacuum interrupter may have field emission from rough spots on the cathode contact during partial discharge tests. This emission is not likely to distort the test results at the voltage level specified in 6.7.1. However, even at this voltage, and especially at higher voltage levels, field emission currents may lead to erroneous conclusions about the presence of partial discharge in solid insulation parallel to the vacuum gap. Since field emission is only observed on a cathode, the observation of asymmetrical results with respect to voltage polarity when a dc voltage is applied is then an indication of the presence of field emission in a vacuum gap instead of a partial discharge in the parallel solid insulation.

Copyright © 2003 IEEE. All rights reserved.

Copyright The Institute of Electrical and Electronics Engineers, Inc.
Provided by IHS under license with IEEE
No reproduction or networking permitted without license from IHS
Not for Resale
[12:41 7/8/03 K:/SGML/ieee/C37.60-2003/Revises-III/C.37.60-2003.3d] Ref: C.37.60-2003 Page: 41 1–70

6.8 Radio influence voltage tests (RIV)

When the primary insulation of the recloser/FI consists of self-restoring dielectric such as oil, or gas (including air) the RIV test shall be performed unless the partial discharge test is performed on the complete recloser. Reclosers/FIs shall meet the RIV limits when tested in accordance with 6.1 and in 6.8.1 through 6.8.3.

6.8.1 Test voltages and limits

The test voltage shall be a minimum of 105% of the line-to-ground voltage corresponding to the rated maximum voltage of the recloser. The limit of radio influence in all cases shall be 250 μV at 1.0 MHz.

Reclosers/FIs having two or more voltage ratings shall be tested on the basis of the highest voltage rating given on the nameplate.

6.8.2 Test conditions

6.8.2.1 Proximity of other apparatus

Any grounded or ungrounded object or structure (except mounting structure when required) shall not be nearer any part of the recloser/FI or its terminals undergoing test than three times the longest overall dimension of the test piece with a minimum allowable spacing of 1 m.

Where space requirements under test conditions do not permit the minimum allowable spacing of 1 m to be maintained, the test shall be considered as satisfactory if the limits of radio influence voltage obtained are equal to or less than those specified in 6.8.1. In such cases, a record should be made of the object, structures, etc., and their distances from the recloser/FI under test; these data are to be kept for future use.

6.8.2.2 Recloser/FI insulating mediums

The tanks of reclosers/FIs with insulating mediums other than air shall be filled with the correct amount of insulating medium and in the case of gas, pressurized to the nominal as-shipped pressure at 20°C.

6.8.2.3 Electrical connections

Conductors of the largest size (bare wire) intended for use with the recloser/FI under test shall be connected to each terminal. The length of the conductors, when used, shall be equal to or greater than the longest overall dimension of the recloser/FI except that the length need not exceed 1.8 m. The free end of any such conductor shall terminate in a sphere having a diameter of twice the diameter of the conductor ± 10% or shall be shielded in some other suitable manner to eliminate the effect of the end of the conductor as a source of radio influence voltage.

6.8.2.4 Atmospheric conditions

Tests shall be conducted under atmospheric conditions prevailing at the time and place of test but itis recommended that tests be avoided when the vapor pressure is below 0.67 kPa or above 2.00 kPa.

Since the effects of humidity and air density upon radio influence voltage are not definitely known, no correction factors are recommended for either at the present time. However, it is recommended that

Copyright © 2003 IEEE. All rights reserved.

Copyright The Institute of Electrical and Electronics Engineers, Inc.
Provided by IHS under license with IEEE
No reproduction or networking permitted without license from IHS Not for Resale
[12:41 7/8/03 K:/SGML/ieee/C37.60-2003/Revises-III/C.37.60-2003.3d] Ref: C.37.60-2003 Page: 42 1–70

barometric pressure and dry and wet bulb thermometer readings be recorded so that, if suitable correction factors should be determined, they could be applied to previous measurements.

6.8.3 Test equipment and procedure

The equipment and general method used in making radio influence voltage tests shall be in accordance with the recommendations of NEMA 107-1987 (methods) and ANSI C63.2-1996 (equipment).

6.8.3.1 Procedure

Tests shall be made with the recloser/FI in the closed and open positions. When tests are made with the recloser/FI in the open position, the radio influence voltage shall be determined with the pole or group of poles not connected to the measuring apparatus both grounded and ungrounded.

6.8.3.2 Tests on multipole devices

In the case of multipole reclosers/FIs, one pole or terminal or groups of the same may be tested at one time.

6.8.3.3 Precautions

The following precautions should be observed when making radio influence voltage tests:

a) The recloser/FI should be approximately the same temperature as the room in which the tests are made.
b) The recloser/FI should be dry and clean.
c) The recloser/FI should not have been subjected to dielectric tests within 2 h prior to the radio influence voltage tests.
d) In some cases, it may be found that the radio influence voltage falls off after the rated power-frequency voltage has been applied for a short time. In such cases, it may be desirable to pre-excite the recloser/FI at normal operating voltage for a period not exceeding 5 min. before proceeding with the tests.

Failure to follow the precautions noted above shall not be cause to disqualify a recloser/FI that meets the limits of 6.8.1.

6.9 Surge current test; series-trip reclosers/FIs

Series-trip reclosers/FIs shall be capable of withstanding two current surges of 65 000 A peak having a 4×10 ($\pm$ 10%) μs waveshape.

6.9.1 Test conditions

If a coil bypass device is required, it shall be mounted in the recloser/FI in the same manner as furnished for normal service. The leads from the high-current impulse generator shall be connected to the terminals of the recloser.

6.9.2 Test procedure

Two current surges of the specified current value shall be applied to each phase. Following this test the recloser/FI shall be tested at the minimum tripping current so as to cause it to go through one automatic operation to lockout.

Copyright © 2003 IEEE. All rights reserved.

Copyright The Institute of Electrical and Electronics Engineers, Inc.
Provided by IHS under license with IEEE
No reproduction or networking permitted without license from IHS Not for Resale
[12:41 7/8/03 K:/SGML/ieee/C37.60-2003/Revises-III/C.37.60-2003.3d] Ref: C.37.60-2003 Page: 43 1–70

6.9.3 Condition after test

At the end of the test the recloser, and the coil bypass device if used, shall be in the following condition:

a) *Mechanical.* Substantially in the same mechanical condition as at the beginning except for minor arc scars on any gap electrodes of the coil bypass device. There shall be no indication of external flashover of the coil bypass device, from the terminals of the coil bypass device to any other parts of the recloser/FI or of the series coil of the recloser.
b) *Electrical.* The recloser/FI in the open position and with the coil bypass device, if used, connected in its normal operating position shall be capable of withstanding rated maximum voltage and when in the closed position, of functioning correctly on overcurrent to go through a typical sequence to lockout.

6.10 Temperature rise test

The reclosers/FIs shall meet the conditions of continuous current rating and limits of observable temperature rise as specified in 5.4.1 and 5.4.2, respectively, when tested as specified in 6.1 and in 6.10.1 through 6.10.3.

6.10.1 Test conditions

The device shall be mounted in an environment substantially free from air currents[11] other than those generated by heat from the device being tested. The temperature should also be constant (as discussed in 6.10.3).

6.10.2 Electrical connections

The recloser shall have a conductor connected to each terminal, having a minimum length of 1.2 m. For reclosers/FIs with bushings designed for connection to bare copper conductors, use cables no larger than listed in Table 11. For aluminum cables, use Table 12. For reclosers/FIs designed to be

Table 11—Size of bare copper leads

Rated continuous current (A)	Size of leads AWG		
	AWG	(kcmil)	mm^2
Up to 50	#6 solid	26.2	14
70–100	#2/0 stranded	133	61
140–200	—	211	81
250–315	—	400	200
400	—	500	250
500	—	600	300
630	—	750	400
800	—	1000	500
1000	—	1500	750
1250	—	2000	1000

NOTE—Multiple (parallel) conductors of equivalent net cross section shall be permitted.

[11]The term "substantially free from air currents" is defined as an air speed limit of 0.5 m/s measured around the test equipment before test. Reference IEC 60694-2002-01, 6.5.

Copyright © 2003 IEEE. All rights reserved.

Copyright The Institute of Electrical and Electronics Engineers, Inc.
Provided by IHS under license with IEEE
No reproduction or networking permitted without license from IHS Not for Resale
[12:41 7/8/03 K:/SGML/ieee/C37.60-2003/Revises-III/C.37.60-2003.3d] Ref: C.37.60-2003 Page: 44 1–70

Table 12—Size of bare aluminum leads

Rated continuous current (A)	Size of leads		
	AWG	kcmil	mm^2
200	#4/0 stranded	211	81
500	—	1000	500
630	—	1250	625

NOTE—Multiple (parallel) conductors of equivalent net cross section shall be permitted.

used with submersible or insulated cables, the cables shall be chosen for the rated current and voltage of the recloser. Refer to IEEE Std 386-1995 for guidance. The connection shall be made to the ends of these conductors.

6.10.3 Test procedure

The rated continuous current of a recloser/FI at rated power-frequency shall be applied continuously until the temperature becomes constant. The continuous current test shall be made for a length of time that assures that the temperature rise of any monitored point in the assembly has not changed by more than 1°C over a 1-h period, with readings being taken at not greater than 30-min. intervals. The frequency of the test current shall not be less than the rated power-frequency of the assembly tested.

If the temperature rise after the second interval is equal to the limit of observable temperature rise (5.4.2) and if the temperature rise has increased since the last reading, the tests shall be continued.

6.10.3.1 Method of temperature determination

This measurement of temperature shall be made using devices such as thermocouples, resistance-temperature detectors, or thermometers applied to the various parts of the apparatus and controlled to minimize extraneous effects. The accuracy of said units shall be capable of resolving the temperature difference of 6.10.3.

6.10.3.2 Value of ambient temperature during test

a) The ambient temperature shall be taken as that of surrounding air, which shall not be less than 10 °C nor more than 40 °C.
b) Corrections shall not be applied for any variations in ambient temperature within the range specified in a).

6.10.3.3 Determination of the ambient temperature

6.10.3.3.1 Placing of measuring device

The ambient temperature shall be determined by taking the average of the readings of three measuring devices placed 30 cm to one side of the device and vertically located as follows:

a) One 30 cm above the top of the device
b) One 30 cm below the bottom of the device
c) One midway between the above two positions

6.10.3.3.2 Use of oil cup

In order to avoid errors due to the time lag between the temperature of apparatus and the variations in the ambient temperature, all reasonable precautions must be taken to reduce these variations and the errors arising from these variations. Thus, when the ambient temperature is subject to such variations that error in taking the temperature rise might result, the measuring device for determining the ambient temperature shall be in a suitable liquid (such as oil) in a suitable cup.

Copyright © 2003 IEEE. All rights reserved.

Copyright The Institute of Electrical and Electronics Engineers, Inc.
Provided by IHS under license with IEEE
No reproduction or networking permitted without license from IHS
Not for Resale
[12:41 7/8/03 K:/SGML/ieee/C37.60-2003/Revises-III/C.37.60-2003.3d] Ref: C.37.60-2003 Page: 45 1–70

The smallest size of oil cup employed in any case shall consist of a metal cylinder 2.5 cm in diameter and 5 cm high.

6.11 Time–current tests

6.11.1 Test conditions

The time–current test conditions shall be as specified in 6.1 and as follows, except the mounting and grounding requirements are not obligatory. The current range for which data shall be obtained shall be from the minimum tripping current to the rated symmetrical interrupting current. The temperature of the oil in reclosers/FIs with hydraulic timers shall be 25 °C ± 2 °C at the start of the test.

6.11.2 Test procedure

Time–current tests shall be conducted as follows (see Figure 1).

6.11.2.1 Contact parting time–current tests

Contact parting time–current tests shall be made at any voltage up to the rated maximum voltage of the recloser/FI being tested with the test circuit so arranged that current through the recloser/FI is held essentially at a constant value.

6.11.2.2 Clearing time–current data

Clearing time–current data shall be determined by either Method A or B.

—Method A: Adding arcing time to the contact parting time obtained in 6.11.2.1. Arcing time may be obtained from oscillograms taken in making interrupting or operating duty tests.
—Method B: Measuring the total clearing time from oscillograms of interrupting tests taken at rated maximum voltage and at currents ranging from minimum trip to rated symmetrical interrupting rating.

6.11.3 Presentation of data standard time–current curves

The results of time–current tests shall be presented as time–current curves on log–log scale. The curves shall show:

a) The clearing time for each instantaneous or fast and time-delayed time–current curve.
b) The voltage at which the tests are made when plotted on the basis of Method B in 6.11.2.2.
c) The type and rating of recloser/FI for which curve data apply.
d) The current range from minimum pickup current to the rated symmetrical interrupting current
e) Instantaneous or fast[12] clearing time–current curves, or both, for reclosers/FIs shall be plotted to maximum test values.
f) Time-delay clearing time–current curves for all reclosers/FIs shall be plotted to average test values. Permissible tolerance from curves are ± 10% of time or current, whichever is greater.
g) The test data shall be referenced to 25 °C.

[12]The terms *instantaneous* and *fast* as used here are essentially the same. Both imply that no intentional delay is added by the control. The term *instantaneous* is used for electronic controls, while the term *fast* is used for mechanical or hydraulic controls that have an inherent (nonintentional) delay in and of themselves.

Copyright © 2003 IEEE. All rights reserved.

Copyright The Institute of Electrical and Electronics Engineers, Inc.
Provided by IHS under license with IEEE
No reproduction or networking permitted without license from IHS Not for Resale
[12:41 7/8/03 K:/SGML/ieee/C37.60-2003/Revises-III/C.37.60-2003.3d] Ref: C.37.60-2003 Page: 46 1–70

6.12 Mechanical duty test

The recloser/FI shall meet the conditions of mechanical duty when tested in accordance with 6.1.1, 6.1.2, and 6.1.3 and with 6.12.1 and 6.12.2.

6.12.1 Mechanical duty test

The recloser/FI shall be subjected to a minimum of 2000 close–open operations without maintenance. Included in the 2000 operations, a minimum of 200 operations shall be performed using the manual opening mechanism and when provided, the manual closing mechanism. The recloser/FI shall be adjusted for the maximum permissible number of close–open operations to lockout. If the reclosing intervals are adjustable, these shall be set for the minimum reclosing intervals for which the recloser/FI is designed.

6.12.2 Condition of recloser/FI following mechanical operation test

The recloser/FI shall be capable of automatic and manual operation. The following items shall be verified:

a) Terminal-to-terminal resistance shall not have increased by more than 50% or 100 μΩ, whichever is greater.
b) The recloser/FI shall be capable of passing a power-frequency withstand test at the values shown in Column 4 of Table 1a) and Table 1b).
c) Primary contact speeds and gaps shall be essentially the same as before the start of the Mechanical Duty Test. Methods to determine this condition may vary by device due to the practicality of measuring certain characteristics.

6.13 Control electronic elements surge withstand capability (SWC) tests

The control elements supplied with shunt-trip reclosers/FIs shall withstand, without damage, voltage surges originating in the low-voltage energy source, in either or both of the current and voltage transformers connected to the control elements, or in the control leads connecting the recloser/FI and the control elements. Both of the tests described in 6.13.1 and 6.13.2 shall be used to demonstrate this capability.

6.13.1 Oscillatory and fast transient surge tests

Testing shall be in accordance with IEEE Std C37.90.1-2002.

6.13.2 Simulated surge arrester operation test

This test simulates a fast lightning induced surge and the resulting voltage changes that appear on the recloser/FI and control elements due to the rate of current change and the impedance of the ground connection.

NOTE—Refer to Annex B for background information on the simulated surge arrester operation test.

6.13.2.1 Test set-up

The following test procedure describes a laboratory simulation of a surge arrester operation.

a) A rod gap connected from one source bushing terminal to the recloser/FI ground lead shall be used to simulate a surge arrester. See Figure 3a). The gap shall be set to flashover at 80%

Copyright © 2003 IEEE. All rights reserved.

Copyright The Institute of Electrical and Electronics Engineers, Inc.
Provided by IHS under license with IEEE
No reproduction or networking permitted without license from IHS
Not for Resale
[12:41 7/8/03 K:/SGML/ieee/C37.60-2003/Revises-III/C.37.60-2003.3d] Ref: C.37.60-2003 Page: 47 1–70

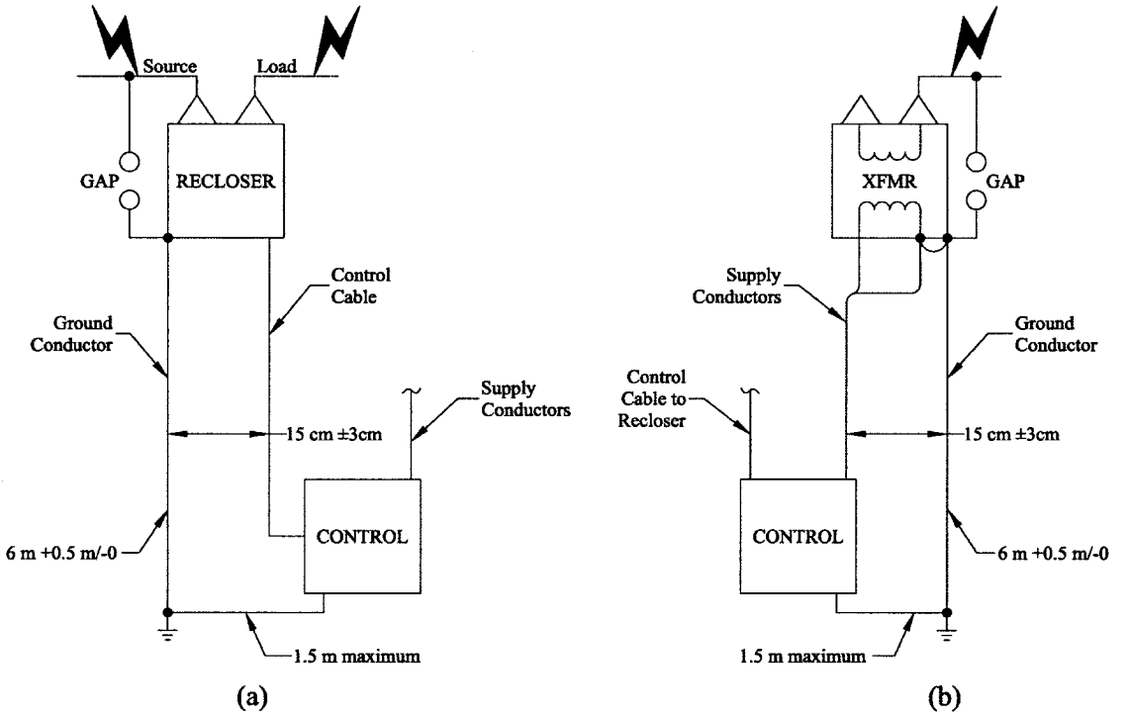

Figure 3—Surge withstand test circuit—control

(±10%) of the rated lightning impulse withstand voltage of the recloser/FI on which the control element is to be applied. The surge voltage shall rise to flashover in 1.2 μs (± 0.5 μs). The ground lead shall be connected to the normal ground terminal of the recloser/FI under test and may be adjacent to the control cable connection.

b) The external surge generator current limiting resistance shall be chosen to provide a surge current following the gap flashover having a peak value of 7000 A (± 10%). The rate-of-rise shall be between 10 kA/μs and 15 kA/μs over the initial 2000 A rise.

c) The control cable shall be spaced 15 cm from and run parallel to the recloser/FI ground lead. The ground lead shall be #12 AWG copper wire.[13]

   1) In the case of a recloser/FI for overhead use, the control cable shall be 6 m (+0.5/−0 m). See note.
   2) In the case of a recloser/FI for pad-mounted, vault or submersible use, the control cable shall be the maximum length permitted by the manufacturer up to a maximum of 6 m (+0.5/−0 m). See note.
   3) The recloser/FI ground lead shall be spaced 15 cm from and run parallel to the recloser/FI control cable for the maximum distance given in (a) and (b) that the setup will allow.
   4) The control ground lead shall be a maximum of 1.5 m[14] to the point where it connects to the recloser/FI ground lead and the laboratory ground point.

d) In the case of a three-phase device, a minimum of 1/3 of the voltage surges of each polarity shall be applied to the bushing closest to the point where the control lead attaches to the recloser/FI.

e) When testing under conditions d) and e) in 6.13.2.2, the supply transformer shall be energized to supply the normal control power to the control under test. This may be accomplished by

[13]The specification of the small gauge #12 AWG wire is to induce a higher voltage differential between the recloser and the control during the current surge. It also is more convenient to work with in a laboratory than the more realistic grounding wire of #6 copper or greater. Refer to Annex B for more detail.

[14]The shorter the control ground lead, the more severe the test will be.

Copyright © 2003 IEEE. All rights reserved.

Copyright The Institute of Electrical and Electronics Engineers, Inc.
Provided by IHS under license with IEEE
No reproduction or networking permitted without license from IHS Not for Resale
[12:41 7/8/03 K:/SGML/ieee/C37.60-2003/Revises-III/C.37.60-2003.3d] Ref: C.37.60-2003 Page: 48 1–70

energizing the primary or by backfeeding through the secondary. In either case, care should be taken to isolate the transformer from the laboratory (house) power supply.

NOTE—If the control apparatus is intended by the manufacturer to always be integrally mounted to, or within, the recloser structure, it shall be considered in compliance with c) 1) and c) 2) in this subclause with a zero length control cable.

6.13.2.2 Test procedure

Fifteen positive and fifteen negative surges shall be applied under each of the following five conditions with the gap on the source bushing. If the device under test has a self-contained power source, conditions (d) and (e) may be omitted.

a) To the source bushing with the recloser/FI open
b) To the source bushing with the recloser/FI closed
c) To the load bushing with the recloser/FI closed
d) To a properly rated transformer, connected as shown in Figure 3b) with the recloser/FI open
e) To a properly rated transformer, connected as shown in Figure 3b) with the recloser/FI closed.

6.13.3 Condition of control during and after test

The control shall be energized and operational during the test with settings as follows:

a) Value of trip point (pickup setting) not to exceed the rated load current of the device
b) Reclosers set for the maximum number of operations to lockout
c) Other settings for normal operation consistent with a) and b) above.

During the application of surges, the control shall neither close the recloser/FI from an open position nor open (trip) the recloser/FI from a closed position. No change of state shall occur or be reported.[15]

Following the tests, the recloser/FI and control apparatus shall be capable of performing all normal functions without impairment.

6.14 Condition of recloser/FI after each test of 6.3 and 6.5

6.14.1 General requirements

During the test, the recloser/FI shall have functioned without failure and without maintenance or replacement of parts.

After performing the specified making and breaking test duties, the recloser/FI shall be in the following condition:

a) *Mechanical.* The recloser/FI shall be substantially in the same mechanical condition as at the beginning and the recloser/FI shall be capable of automatic and manual operation. The time–current characteristics of the recloser, as defined in 6.11 shall be substantially the same as initial (prior to test duty) values. The arcing contacts or any other specified renewable parts may be worn. The quality of the oil, used for arc extinction in oil reclosers/FI may be impaired and its quantity reduced from the normal level. There may be deposits on the insulators caused by the decomposition of the arc-extinguishing medium.
b) *Electrical.* The recloser/FI shall be capable of withstanding 80% of the dry power-frequency insulation withstand test level for one minute, and of carrying rated continuous current, but not

[15]Reporting may include event recording, oscillography, and SCADA.

Copyright © 2003 IEEE. All rights reserved.

Copyright The Institute of Electrical and Electronics Engineers, Inc.
Provided by IHS under license with IEEE
No reproduction or networking permitted without license from IHS
[12:41 7/8/03 K:/SGML/ieee/C37.60-2003/Revises-III/C.37.60-2003.3d] Not for Resale Ref: C.37.60-2003 Page: 49 1–70

necessarily without exceeding rated temperature rise. Resistance measurements taken before and after the operating duty test may be used to establish the ability to carry the rated continuous current.

Visual inspection and no-load operation of the used recloser/FI after tests are usually sufficient for checking these requirements. For reclosers/FIs having contact structures not readily visible, a contact resistance check shall be made to determine the recloser's current carrying ability, with a current of at least 100 A, dc. The value of the contact resistance shall be less the 200% of that before the test sequence. If the resistance has increased to more than 200%, a temperature rise test at rated continuous current with thermocouples placed as practicable shall be conducted, to ensure the recloser/FI will not experience thermal runaway.

6.14.2 Supplemental tests

If there is any doubt as to whether or not the recloser/FI has passed the electrical test with respect to any of the criteria in a) and b) of 6.14.1, further testing of the capability that is in doubt shall be made. The additional tests may include the following as appropriate:

a) A continuous current test with no thermal runaway. Thermal runaway means that the temperature does not stabilize and continues to increase as a trend.
b) A suitable interrupting test.
c) A rated power-frequency dry withstand voltage test at 80% of the rated power-frequency dry withstand voltage to evaluate the insulating ability.

6.14.3 Specific requirement for vacuum interrupters in SF_6 insulated equipment

If the last test in a sequence is a short-time current test or a switching test, a further check of the vacuum interrupter integrity is required. This extra test is necessary because a failure of the vacuum interrupter that results in a leak will have that interrupter backfilled with SF_6, a condition that cannot be detected with a regular power-frequency withstand test.

The vacuum interrupter integrity shall be verified by performing a short-circuit interruption test at 10% or more of the rated short-circuit current with the rated TRV:

a) If performed three-phase, then both the source and the load neutral shall be grounded.
b) If performed single-phase, then each pole shall be tested separately.

7. Production tests (routine tests)

All applicable production tests shall be made by the manufacturer on each recloser, at the factory after final assembly except that the partial discharge tests may be performed on subassemblies as described in 7.4.

Production tests shall include the following:

a) Calibration
b) Control, secondary wiring and accessory device test
c) Dielectric withstand test; 1-min. dry power-frequency
d) Partial discharge test
e) No load mechanical operation test

Copyright © 2003 IEEE. All rights reserved.

Copyright The Institute of Electrical and Electronics Engineers, Inc.
Provided by IHS under license with IEEE
No reproduction or networking permitted without license from IHS Not for Resale
[12:41 7/8/03 K:/SGML/ieee/C37.60-2003/Revises-III/C.37.60-2003.3d] Ref: C.37.60-2003 Page: 50 1–70

f) Water leak test; submersible reclosers/FIs only
g) Gas leak test (gas-filled reclosers/FIs only). Maximum permissible gas leak rate not to exceed a minimum 10-year replenishment period.

7.1 Reclosing and overcurrent trip calibration

Reclosers/FIs shall be subjected to the following calibration, where applicable, for conformance to published time–current characteristic curves. Calibration may be performed on the individual control elements subassembly prior to final assembly on the recloser. When the latter is done, the effect of the operating time on the recloser/FI shall be recognized, and the complete assembly shall be tested to assure that the device will trip the recloser. A sinusoidal wave shape current at a convenient voltage shall be used. The calibration may be performed in any order deemed appropriate by the manufacturer.

a) Minimum tripping current test (see 6.6)
b) Trip settings
c) Time current tests (see 6.11.2.1)
d) Sequencing tests
e) Remote features
f) Special features

7.2 Control, secondary wiring, and accessory devices check tests

Control, secondary wiring, and accessory devices shall be checked to ensure that all connections have been made correctly. Devices and relays, if needed, shall be checked by actual operation where feasible. Those circuits for which operation is not feasible shall be checked for continuity.

7.3 Dielectric withstand test; 1-min. dry power-frequency

The test shall be conducted in accordance with 6.2 except that Test 4 of 6.2.3 shall not be required. The duration of the test may be reduced to 10 s if a voltage of 110% of that specified in 6.2.1.2 is used.

7.4 Partial discharge test

Partial discharge tests shall be performed on all reclosers/FIs that use a nonrestoring dielectric as the primary insulation (e.g., solid dielectric). Tests shall be performed as specified in 6.7 except that modular testing of components is permitted in all cases. The manufacturer shall establish the appropriate test limits for each test object.

7.5 Mechanical operations tests

The mechanical operations tests shall include the following:

a) Inspection of the external parts
b) Manual tripping by the tripping lever
c) Without trouble or malfunction, 25 consecutive operational tests to check performance of a mechanism, sequencing, and time devices. Shunt-trip reclosers/FIs shall have five operations performed at minimum control voltage.

Copyright © 2003 IEEE. All rights reserved.

Copyright The Institute of Electrical and Electronics Engineers, Inc.
Provided by IHS under license with IEEE
No reproduction or networking permitted without license from IHS Not for Resale

7.6 Water leak test

A suitable leak test shall be performed on submersible reclosers/FIs to ensure that they will operate under service conditions as outlined in Item c) of 4.1.

8. Field tests on units in service, including dc withstand tests on cables

Field testing of a recloser/FI either alone or as part of a distribution switchgear unit is not considered to be a design test. Field testing is performed to determine the condition of the equipment after shipment, service, or maintenance. When these tests are performed, the recommended dielectric test levels shall not exceed 75% or 80% (Note 1) of rated values given in Table 1a) and Table 1b) and only when the recloser/FI is completely isolated from all system voltages. The use of a test voltage that is lower than the design test voltage reduces the risk of damaging the equipment while performing the test. Radio influence voltage and partial discharge voltage tests may be performed at voltage test levels up to 105% of the line-to-ground voltage corresponding to the rated maximum voltage of the recloser/FI.

An ac withstand test is one commonly used method to evaluate the insulation integrity of switchgear. An ac test provides one acceptable assessment of the insulation integrity of all kinds of insulation, including open switches, interrupters of oil, gas, and vacuum designs. DC withstand tests are often used as a substitute when an ac tester is not available. When using a dc withstand test to check the integrity of a vacuum interrupter, both voltage polarities must be applied since a measurable leakage current in only one polarity can be mistaken for an indication of a vacuum interrupter in poor condition. If the leakage current is markedly higher in one polarity, this normally indicates that field emission is occurring on a rough spot on the contact that is a cathode when that voltage polarity is applied. For this reason, ac is the preferred method of testing the integrity of a vacuum interrupter.

A dc withstand test for new switchgear equipment is specified as a related design test recognizing that the equipment may be subjected to dc voltage when connected to cable. This related dc withstand test is a significant overvoltage, approximately equal to the peak value of the related power-frequency withstand voltage, and it may be near the flashover limit of the insulation or across an isolating gap. All buses or ways not undergoing test are de-energized and grounded during these design tests. The dc withstand capability of switchgear may degrade in service because of aging, contamination, and electrical or mechanical damage.

In-service dc testing of cables is performed to determine their condition and to locate faults. Switchgear may also be subjected to the dc test voltages if the cables are connected to the gear. The industry standards, AEIC CS8-2000 [B1], describe such cable testing. DC testing also includes cable "thumping," i.e., the sudden application of dc voltage with substantial energy for fault locating, which causes transients and voltage doubling at the end of the open cable. These same transients can stress the switchgear at higher voltages. Tests of cables with very low frequency voltages are also now being used.

WARNING

When a cable connected to a recloser/FI either alone or as part of a distribution switchgear unit is to be subjected to dc tests, it is recommended that the switchgear unit be isolated from all source voltages to provide for the maximum safety of maintenance personnel and equipment. The recommendations of the manufacturers of the switchgear, dc test equipment, voltage transformers, surge arresters, and terminators, connectors, and bushings should be followed.

NOTE 1—IEC practice is to test at 80% of the values given in Table 2a) and Table 2b). Users may use this higher test level if permitted by the manufacturer of the equipment. In an effort to harmonize with IEC, it is expected that the manufacturers will adopt the 80% level by revision of their equipment maintenance manuals.

Copyright © 2003 IEEE. All rights reserved.

Copyright The Institute of Electrical and Electronics Engineers, Inc.
Provided by IHS under license with IEEE
No reproduction or networking permitted without license from IHS Not for Resale
[12:41 7/8/03 K:/SGML/ieee/C37.60-2003/Revises-III/C.37.60-2003.3d] Ref: C.37.60-2003 Page: 52 1–70

9. Construction requirements

9.1 Tank construction: submersible or dry vault reclosers/FIs

9.1.1 Tank material and finish

The tank and all appurtenances shall be made of corrosion resistant material or provided with an impact and corrosion resistant finish and shall also be suitable for storage in uncovered areas.

9.1.2 Water entrapment

External parts of the tank or accessories shall not trap or hold water.

9.1.3 Tank support

Tank support shall provide firm, stable support and shall include provision for anchoring the tank.

9.1.4 Lifting lugs

Lifting lugs shall be provided and so positioned that the recloser/FI will remain level when being lifted. They shall be designed and located on the tank to avoid interference between lifting slings and any attachments (bushings, operating handles, etc.), and to avoid scratching or marring the tank finish during handling.

9.1.5 Pressure tight

Tank construction for liquid filled or nonpressurized devices shall be such that leaks will not occur and the recloser/FI will remain mechanically operable at the maximum operating pressure generated by the normal operation of the recloser/FI (e.g., temperature rise, load interrupting, and fault closing).

9.2 Grounding provisions

A recloser/FI with a metal housing shall have provisions for the connection of a ground lead.

The ground connector shall accommodate a ground conductor of a size adequate to conduct the rated symmetrical interrupting current of the recloser/FI for a period of 2 s without damage to the conductor or connector.

A recloser/FI control housing that may be mounted separately from the recloser/FI or that contains control elements that rely on solid grounding for surge immunity shall also have provisions for the connection of a ground lead.

Pad-mounted, dry vault, and submersible reclosers/FIs shall have an additional grounding connection for each three-phase set of cable entrances.

Copyright © 2003 IEEE. All rights reserved.

Copyright The Institute of Electrical and Electronics Engineers, Inc.
Provided by IHS under license with IEEE
No reproduction or networking permitted without license from IHS Not for Resale
[12:41 7/8/03 K:/SGML/ieee/C37.60-2003/Revises-III/C.37.60-2003.3d] Ref: C.37.60-2003 Page: 53 1–70

9.3 Insulating medium quantity indicators

When liquid or gas is used as the insulating medium, provision shall be made for personnel to readily determine the insulating liquid level or insulating gas status with the recloser/FI energized. The indicator shall show whether the device is in the safe operating range. Procedures or devices that require exposing the insulating medium to the outside environment shall not be used.

9.4 Oil sampling provision (submersible reclosers/FIs)

When oil is used as the insulating medium, provision shall be made to obtain a bottom oil sample.

9.5 Manual operating provision

Reclosers/FIs shall be provided with a manual operating lever to open the recloser. The operating lever shall be suitable for operation with a hot line stick. The operating lever on a submersible recloser/FI shall be located such that one person standing on the surface can operate it without standing directly over the recloser.

9.6 Position indicator

A recloser/FI shall be provided with a position indicator, or other suitable means, which clearly indicates its closed, or open position and shall be visible from the surface. For pad-mounted, dry vault, or submersible reclosers/FIs viewing of the position indicator may require opening of the pad or underground enclosure.

Local regulations or safety standards may be specified by the user for colors and indicia. In the absence of user specifications, the preferred colors to indicate an open or closed position are red to signify closed and green to signify open.

NOTE—It is recommended that the words be in contrasting letters against the background colors.

9.7 Nameplate markings

The following minimum information shall be given on a nameplate:

a) Manufacturer's name or trademark
b) Manufacturer's type or identification number to indicate the design or construction. Changes in operating characteristics, design, or construction, which affect its application or service, shall be accomplished by a change in the identification data.
c) Rated power-frequency (Note 1)
d) Rated maximum voltage
e) Rated continuous current
f) Rated minimum tripping current (series-trip reclosers/FIs only)
g) Rated symmetrical interrupting current
h) Rated lightning impulse withstand voltage
i) Serial number and date of manufacture
j) Type and quantity of insulating material (Note 2)
k) Weight of device

Copyright © 2003 IEEE. All rights reserved.

Copyright The Institute of Electrical and Electronics Engineers, Inc.
Provided by IHS under license with IEEE
No reproduction or networking permitted without license from IHS Not for Resale
[12:41 7/8/03 K:/SGML/ieee/C37.60-2003/Revises-III/C.37.60-2003.3d] Ref: C.37.60-2003 Page: 54 1–70

NOTES
1—Required only if the related ratings are not applicable at both 50 Hz and 60 Hz.
2—Required only if the insulating medium must be removed for maintenance or testing, or if it must be inspected for replenishment.

For submersible reclosers/FIs, a nameplate of stainless steel or other corrosion resistant material shall be provided. The nameplate shall be securely attached to the top of the tank by means of stainless steel screws, rivets, or other corrosion resistant fasteners. All letters, schematics, and numbers shall be permanently stamped, embossed, or engraved on the nameplate.

9.8 Stored energy mechanism charge indicator

When indicators are used on stored energy operating mechanisms, the following colors shall be used subject to any local codes or indicia requirements.

a) Yellow background with CHARGED in black letters for charged mechanisms
b) White background with DISCHARGED in black letters for discharged mechanisms

9.9 Enclosure integrity

Pad-mounted reclosers/FIs shall conform to the requirements specified for category A equipment as defined in ANSI C57.12.28-1999.

9.10 Counters

An operations counter shall be provided to indicate the total number of operations of automatic reclosers/FIs. The counter shall be visible with the recloser/FI in service. This feature is not required for fault interrupters.

9.11 Conductor terminal sizes

For connection of bare conductors, bushing terminals shall accommodate conductors of a size adequate to conduct the rated continuous current of the recloser/FI without exceeding the appropriate temperature rise shown in 5.4.2.

NOTE—For reclosers/FIs fitted with cable terminations, bushings should accommodate cable terminations in accordance with the IEEE Std 386-1995 or IEC 60502-2-1998-11 unless otherwise specified by the user.

9.12 Tank construction—pressurized reclosers/FIs only

9.12.1 Design and withstand

Reclosers/FIs with operating pressure and size that fall within the scope of the ASME BPVC-1998 shall adhere to the requirements of the Code unless superceded by local jurisdictional codes.

9.12.2 Leak rate

The maximum permissible gas leak rate is not to exceed a minimum 10-year replenishment period.

Copyright © 2003 IEEE. All rights reserved.

Copyright The Institute of Electrical and Electronics Engineers, Inc.
Provided by IHS under license with IEEE
No reproduction or networking permitted without license from IHS Not for Resale
[12:41 7/8/03 K:/SGML/ieee/C37.60-2003/Revises-III/C.37.60-2003.3d] Ref: C.37.60-2003 Page: 55 1–70

Annex A

(informative)

X/*R* Ratios

A general understanding of circuit time constant (τ_{cc}) and X/R ratio and associated peak currents is necessary for the proper design, testing, and application of switchgear. The mechanical stresses associated with fault withstand or fault making, are in relation with the square of the peak current (i_p^2) and the thermal stress associated with pre-arcing or fault current interruption is a complex relation of the arc voltage, the arcing time, and the total charge (integral of the arcing current).

A.1 Time constant (τ_{cc}) and *X*/*R* ratio

An electrical circuit may be defined by its main series components that are the inductance (L or X) ($X = 2\pi fL$) and resistance. The circuit time constant is defined by the ratio L/R. The X/R ratio is frequency dependent (i.e., a time constant of 45 ms will lead to a X/R ratio of 17 at 60 Hz and 14.1 at 50 Hz.

For a three-phase fault, the positive sequence components of the circuit shall be considered ($\tau_{cc} = L_1/R_1$, $X/R = X_1/R_1$). For a phase-to-ground fault, the positive and zero sequences components shall be considered ($\tau_{cc} = [2L_1 + L_0]/[2R_1 + R_0]$, $X/R = [2X_1 + X_0]/[2R_1 + R_0]$).

where

R_0 is the zero sequence resistance
R_1 is the positive sequence resistance
L_0 is the zero sequence inductance
X_0 is the zero sequence reactance
L_1 is the positive sequence inductance
X_1 is the positive sequence reactance

A.2 Asymmetrical fault current

The maximum asymmetrical current is associated with a fault initiation at zero voltage. This may be associated with lightning flashover or with a switch or a breaker closing or reclosing on a faulted circuit or a temporary ground. If a three-phase switching device is used, an asymmetrical fault current will occur in one of the phases, the value of which is between 87% and 100% of maximum asymmetrical current.

The instantaneous current of a single-phase circuit will be in accordance with Equation (A.1).

$$i = \sqrt{2}I\left[\sin(\omega t + \phi - \theta) + \sin(\theta - \phi)e^{-t/\tau_{cc}}\right] \quad \text{(A.1)}$$

where

i is the instantaneous current
I is the rms value of the current
ω is the angular frequency ($2f$)
θ is the phase angle $= \tan^{-1}(X/R)$

Copyright © 2003 IEEE. All rights reserved.

Copyright The Institute of Electrical and Electronics Engineers, Inc.
Provided by IHS under license with IEEE
No reproduction or networking permitted without license from IHS Not for Resale
[12:41 7/8/03 K:/SGML/ieee/C37.60-2003/Revises-III/C.37.60-2003.3d] Ref: C.37.60-2003 Page: 56 1–70

ϕ is the angle between voltage zero and time that fault is initiated
t is the time
τ_{cc} is the circuit time constant (L/R or $X/R\omega$) (see A.1)

The peak asymmetrical current (i_p) is the maximum of this formula. The peak factor is i_p/I. The rms factor can be calculated using Equation (A.2):

$$\text{RMS factor} = \sqrt{1 + \left(\sqrt{2}\,e^{-t_p/\tau_{cc}}\right)^2} \tag{A.2}$$

in which t_p is time to the peak, or the time to maximum of previous formula.

Table A.1 is a tabulation of the peak factor and the rms factor for both 50 Hz and 60 Hz over a range of time constants.

Table A.1—*X/R* ratios: peak factors and rms factors

Time constant [τ_{cc}] (ms)	*X/R* ratios		Peak factor [i_p/I]		rms factor	
	at 60 Hz	at 50 Hz	at 60 Hz	at 50 Hz	at 60 Hz	at 50 Hz
10.6	4.0	3.3	2.09	2.01	1.21	1.16
21.2	8.0	6.7	2.38	2.31	1.39	1.35
31.8	12.0	10	2.51	2.46	1.49	1.45
45	17.0	14.1	2.59	2.55	1.55	1.52
60	22.6	18.9	2.65	2.61	1.59	1.56
90	33.9	28.3	2.70	2.68	1.63	1.61
120	45.3	37.7	2.73	2.72	1.66	1.64
150	56.6	47.1	2.75	2.74	1.67	1.66

Copyright © 2003 IEEE. All rights reserved.

Copyright The Institute of Electrical and Electronics Engineers, Inc.
Provided by IHS under license with IEEE
No reproduction or networking permitted without license from IHS
Not for Resale
[12:41 7/8/03 K:/SGML/ieee/C37.60-2003/Revises-III/C.37.60-2003.3d] Ref: C.37.60-2003 Page: 57 1–70

Annex B

(informative)

Simulated surge arrester operation tests

Simulated surge arrester operation tests have traditionally been used to verifying recloser/FI system operation and its capability to survive fast lightning induced surges. This test falls into a broader category of electromagnetic compatibility tests normally applied to protective relay devices and defined in:

a) IEEE Std C37.90™-1989 [B10]
b) IEEE Std C37.90.1-2002 (SWC)
c) IEEE Std C37.90.2™-1995 (RF susceptibility) [B11]
d) IEEE Std C37.90.3™-2001 [B12]
e) IEC 60255-22-1-1988 (1 MHz burst disturbance tests) [B3]
f) IEC 60255-22-2-1996 (Electrostatic discharge tests) [B4]
g) IEC 60255-22-3-2000 (Radiated electromagnetic field disturbance tests) [B5]
h) IEC 60255-22-4-1992 (Fast transient disturbance test) [B6]
i) IEC 60255-22-6-1988 [B7]

Regardless of the number and similarity between some of these test standards, experience has shown that an electronic control built and tested to meet the preceding standards may often misoperate or be permanently damaged after exposure to lightning surges normally encountered on a distribution power system. The problem is easily understood by observing that the standards noted were developed for a power system substation environment. In this environment, individual control devices can rely on well-established EMC protection practices, including: high-quality ground grid, bonding, lightning shields, substation class arresters, greater distance between switching devices and the control house, and extensive shielding as found in metal clad and GIS switchgear. Few, if any, of these measures are available to protect or shield a midline distribution recloser. The control conductors, local distribution class arresters, and the local grounding system are called upon to absorb the full impact of the lightning strike.

Simulated surge arrester operation testing fills the void by defining an all encompassing system test. As currently defined, the test provides a fast rise time (1.2 μs), BIL type waveform stressing the basic insulation, and capacitive coupling through current and/or voltage transformers and any other devices present in the design. The voltage peak is followed by an air gap flashover discharging 7000 A into the recloser/FI ground system. This discharge radiates a strong electromagnetic field impulse and a fast voltage collapse further enhancing the capacitive coupling effect. Once the sparkover occurs, the fast current front (di/dt in excess of 10 000 A/μs) results in a voltage drop across the grounding conductor (mostly inductive, at approximately 1 μH/m), thus effectively separating the recloser/FI ground reference from the electronic control. If not adequately controlled, the potential difference can reach the 60 000 V level.

The test may end with a high-current ringing waveform. The ringing frequency is determined by the inductance of the recloser/FI ground conductor, the test generator output capacitor, and circuit damping. The exceptionally high current levels involved during this phase of the test generate high-frequency magnetic fields. However, the di/dt is the more critical parameter. The shape of the subsequent waveform after the initial di/dt is not critical as long as the peak current of 7 kA is met.

There are five distinct series of tests. In the first series, the source side of the recloser is surged with the recloser in the open position. This stresses the insulation of the recloser itself and any source side CTs

Copyright © 2003 IEEE. All rights reserved.

Copyright The Institute of Electrical and Electronics Engineers, Inc.
Provided by IHS under license with IEEE
No reproduction or networking permitted without license from IHS Not for Resale
[12:41 7/8/03 K:/SGML/ieee/C37.60-2003/Revises-III/C.37.60-2003.3d] Ref: C.37.60-2003 Page: 58 1–70

and PTs that may be built into the device. The second series surges the source side with the recloser/FI closed allowing the surge to reach through the current carrying circuit of the device to the load side bushing. The third series applies the surge to the load bushing while the flashover gap remains on the source side. This sends the discharge current through the current carrying circuit stressing CT windings. In the fourth and fifth series, the voltage and current surge is applied to a transformer that is providing the power to the control. This series stresses the power supply circuits in the control with the recloser in the open and then the closed positions.

All of the enumerated EMI disturbances are capable of disrupting the operation of electronic devices, especially the recloser/FI control. They act in unison exposing a wide variety of potential system problems such as: spurious interrupts, unsolicited keyboard operation, CPU resets, RF susceptibility, insulation failure, A/D subsystem failure, insufficient clearance related flashovers, inadequate grounding, power supply shutdown, shielding problems, target failures, display lockouts, and more.

It is important to note that the test severity is determined primarily by the combination of fast current and voltage transients and the electromagnetic disturbance associated with the event. The 7000 A crest current in combination with the relatively high impedance and closely coupled ground provides the energy. A series of 15 positive and 15 negative surges per test configuration is used to capture the complex statistical nature of the EMI disturbance interaction with the system under test. It should also be noted that the specified grounding (wire gage, conductor spacing, and conductor length) are a part of the test setup that forces uniformity of the test. For example, the use of 12 gage wire at 15 cm spacing presents a worse case test and is more easily set up in a laboratory than the more common and appropriate use of #6 wire and 30 cm spacing in actual service. Figure B.1

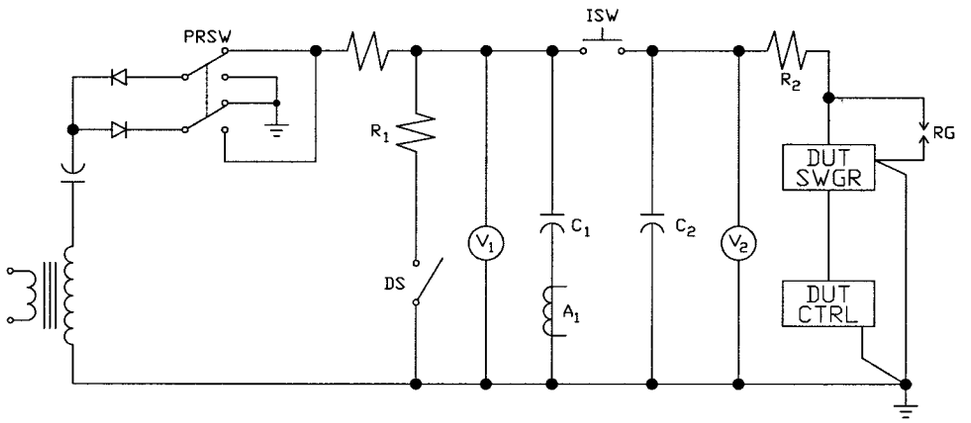

A_1 – SURGE CURRENT
C_1 – CHARGE STORAGE CAPACITOR
C_2 – WAVE SHAPING CAPACITOR
DS – DISCHARGE SWITCH
DUT CTRL – DEVICE UNDER TEST (CONTROL)
DUT SWGR – DEVICE UNDER TEST (RECLOSER SWITCHGEAR)
ISW – INITIATION SWITCH
PRSW – POLARITY REVERSING SWITCH
R_1 – DISCHARGE RESISTOR
R_2 – WAVE SHAPE – CURRENT LIMITING RESISTOR
RG – ROD GAP
V_1 – CHARGE VOLTAGE – (REF)
V_2 – TEST VOLTAGE – (CALIBRATION)

Figure B.1—Surge test circuit

Copyright © 2003 IEEE. All rights reserved.

Copyright The Institute of Electrical and Electronics Engineers, Inc.
Provided by IHS under license with IEEE
No reproduction or networking permitted without license from IHS
Not for Resale
[12:41 7/8/03 K:/SGML/ieee/C37.60-2003/Revises-III/C.37.60-2003.3d]
Ref: C.37.60-2003
Page: 59
1–70

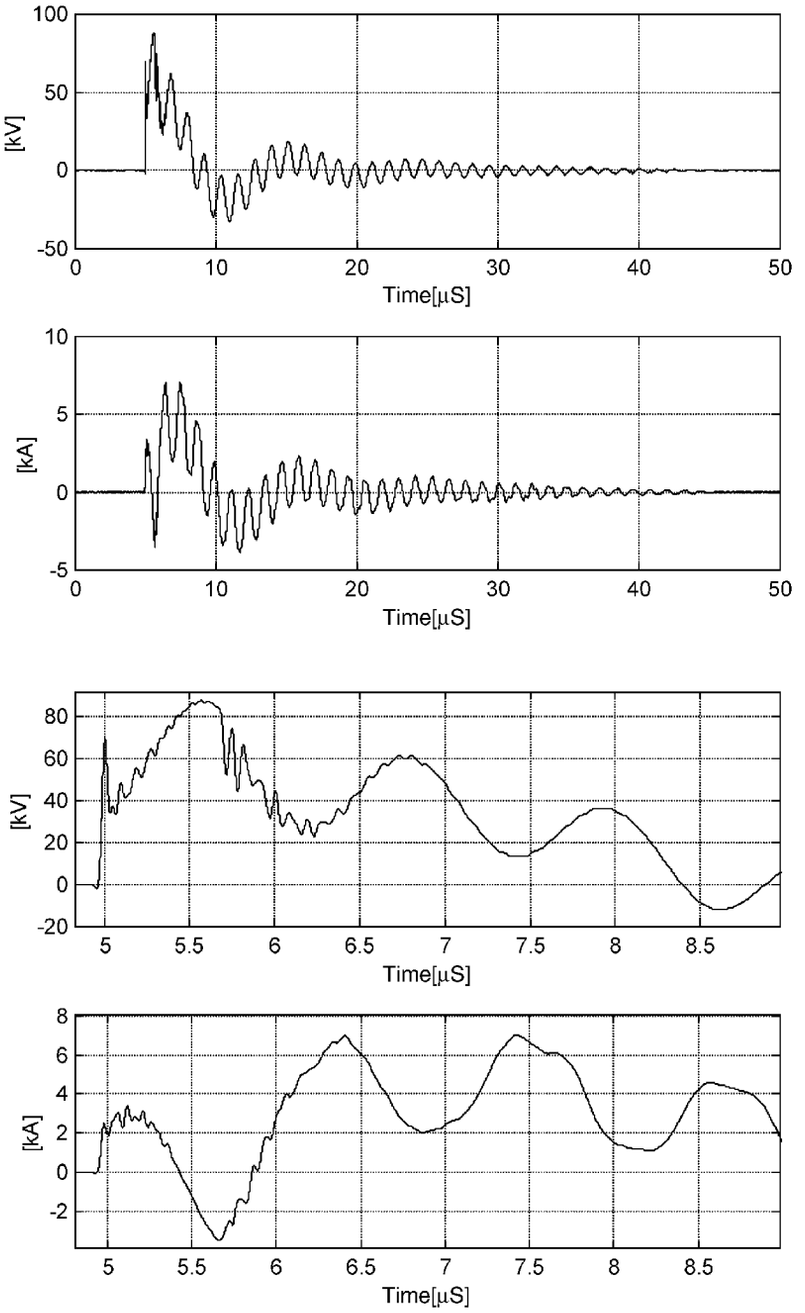

Figure B.2—Typical surge voltage and current waves

illustrates a typical test generator setup. Figure B.2 shows a typical surge voltage wave across the device under test. Inspection of the expanded current trace indicates an initial current rise to about 2200 A in less than 0.1 μs for a rate of rise in excess of 22 kA/μs. The current also reaches 7000 A on two successive crests. It should be emphasized that the DUT is a system combination of the recloser/FI switching device, the recloser/FI control, the interconnecting cable, and their respective provisions for effective grounding.

Copyright © 2003 IEEE. All rights reserved.

Copyright The Institute of Electrical and Electronics Engineers, Inc.
Provided by IHS under license with IEEE
No reproduction or networking permitted without license from IHS Not for Resale
[12:41 7/8/03 K:/SGML/ieee/C37.60-2003/Revises-III/C.37.60-2003.3d] Ref: C.37.60-2003 Page: 60 1–70

Annex C

(normative)

Method of drawing the envelope of the prospective transient recovery voltage of a circuit and determining the representative parameters

C.1 Introduction

A transient recovery voltage wave may assume different forms, both oscillatory and nonoscillatory. The wave may be defined by means of an envelope made up of two consecutive line segments; when the wave approaches that of a damped oscillation at one single frequency, in all cases, the envelope should reflect as closely as possible the actual shape of the transient recovery voltage. The method described here enables this aim to be achieved in the majority of practical cases with sufficient approximation.

NOTE—Nevertheless, some cases may arise where the proposed construction would lead to parameters quite obviously more severe than would be justified by the transient recovery voltage curve. Such cases should be dealt with as exceptions and, as a consequence, form the subject of an agreement between the manufacturer and user or the test laboratory.

C.2 Drawing the envelope

The following method is used for constructing the line segments forming the envelope of the prospective transient recovery voltage curve.

a) The first line segment passes through the origin O, is tangential to the curve and does not cut the curve (see Figure C.1—line segment OA).
b) The second line segment is a horizontal line tangential to the curve at its highest peak (see Figure C.1—line segment AC).

NOTE—The point of contact of the first line segment and the highest peak are comparatively close to each other for the case for a curve representing a damped oscillation of a single frequency or a curve of similar shape generally referred to as a 1-cosine waveshape. The two-parameter envelope O, A, C is then obtained.

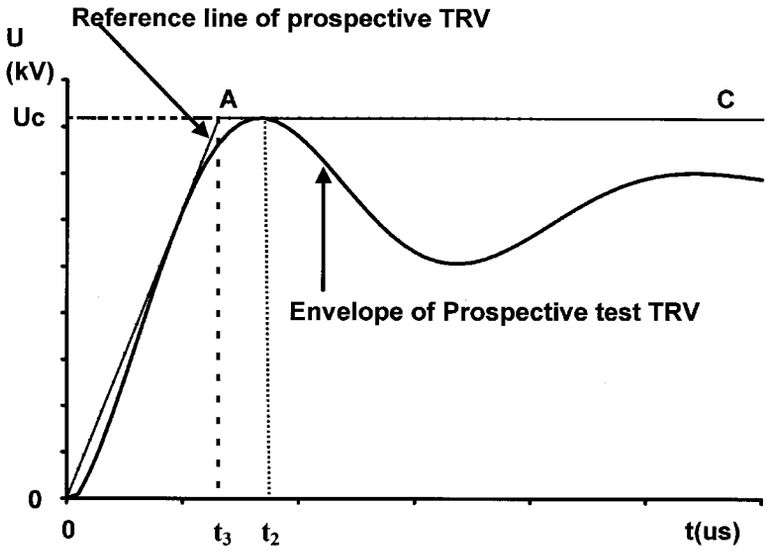

Figure C.1—Representation by two parameters of a prospective transient recovery voltage of a test circuit

Copyright © 2003 IEEE. All rights reserved.

Copyright The Institute of Electrical and Electronics Engineers, Inc.
Provided by IHS under license with IEEE
No reproduction or networking permitted without license from IHS
Not for Resale
[12:41 7/8/03 K:/SGML/ieee/C37.60-2003/Revises-III/C.37.60-2003.3d]
Ref: C.37.60-2003
Page: 61
1–70

C.3 Determination of parameters

The two representative parameters are, by definition, the coordinates of the points of intersection of the line segments constituting the envelope. When the envelope is composed of two line segments, the two parameters u_c and t_3 shown in Figure C.1 can be obtained as coordinates of the point of intersection A.

NOTE—A TRV with a 1-cosine wave shape is described by the TRV peak voltage and the time to peak. These two parameters have been referred to in ANSI C37.06-2000, as shown in Equation (C.1) and Equation (C.2):

$$E_2 = \text{TRV peak voltage} = u_c \tag{C.1}$$

$$T_2 = \text{Time to } E_2 = 1.138 \times t_3 \tag{C.2}$$

As seen in Figure C.1, t_3 is a bit smaller that T_2. Accordingly, equivalent values of T_2 and t_3 can be found using Equation (C.2) for any 1-cosine waveshape.

Copyright © 2003 IEEE. All rights reserved.

Copyright The Institute of Electrical and Electronics Engineers, Inc.
Provided by IHS under license with IEEE
No reproduction or networking permitted without license from IHS Not for Resale
[12:41 7/8/03 K:/SGML/ieee/C37.60-2003/Revises-III/C.37.60-2003.3d] Ref: C.37.60-2003 Page: 62 1–70

Annex D

(informative)

Background basis of recloser TRV values

The TRV descriptions for reclosers are based on the IEEE and IEC standards for high-voltage circuit breakers and the following ANSI fuse standard:

a) IEEE Std C37.04-1999, IEEE Standard Rating Structure for AC High-Voltage Circuit Breakers.
b) ANSI C37.06-2000, American National Standard for AC High-Voltage Circuit Breakers Rated on a Symmetrical Current Basis—Preferred Ratings and Related Required Capabilities.
c) IEEE Std C37.41-2000, IEEE Standard Design Tests for High-Voltage Fuses, Distribution Enclosed Single-Pole Air Switches, Fuse Disconnecting Switches, and Accessories
d) IEC 62271-100-2003-05, High-Voltage Switchgear and Controlgear—Part 100: High-Voltage Alternating-Current Circuit Breakers.
e) IEC 60694-2002-01, Common Specifications for High-Voltage Switchgear and Controlgear Standards.

The waveform of a typical TRV in medium voltage distribution circuits as a function if time is usually a 1-cosine function (Figure D.1). This 1-cosine is used as the basic TRV IEEE C37.04-1999 (the 1999 revision) for HV circuit breakers.

The two-parameter description of the waveform boundary from IEC 62271-100-2003-05 is simply another way of describing the same waveform as a boundary consisting of straight lines that the waveform does not cross (Figure D.2 and Figure D.3). There is work in progress at the time of this writing to harmonize the TRV descriptions in ANSI/IEEE and IEC standards. One aspect of this harmonization activity is to use the two-parameter method of describing the TRV. The second aspect of this harmonization activity is to use the same numbers at a given rated voltage to specify the TRV for testing and application. Therefore, the TRV description in this revision, IEEE Std C37.60-2003, uses the two-parameter TRV description and bases the preferred rated values on the most closely applicable standard.

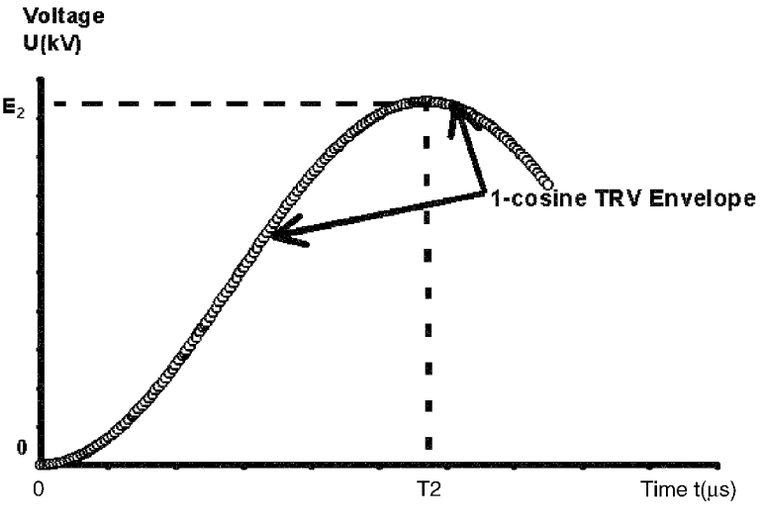

Figure D.1—A TRV waveform as a 1-cosine function of time

Copyright © 2003 IEEE. All rights reserved.

Copyright The Institute of Electrical and Electronics Engineers, Inc.
Provided by IHS under license with IEEE
No reproduction or networking permitted without license from IHS
Not for Resale
[12:41 7/8/03 K:/SGML/ieee/C37.60-2003/Revises-III/C.37.60-2003.3d] Ref: C.37.60-2003 Page: 63 1–70

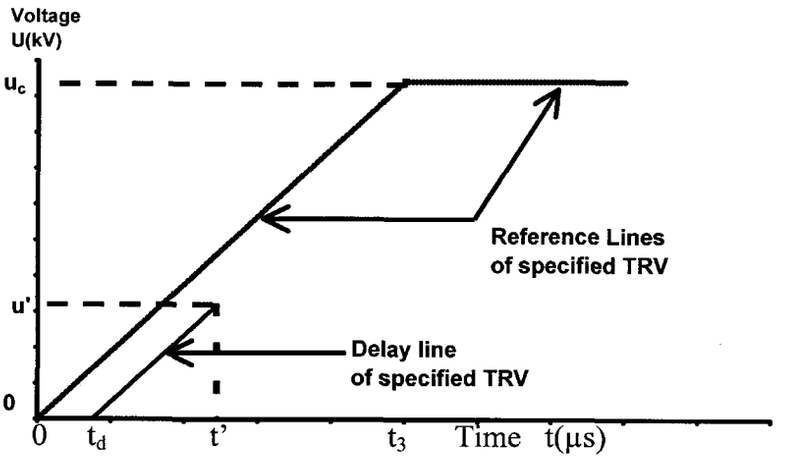

Figure D.2—Representation of the specified TRV as a two-parameter line and a delay line

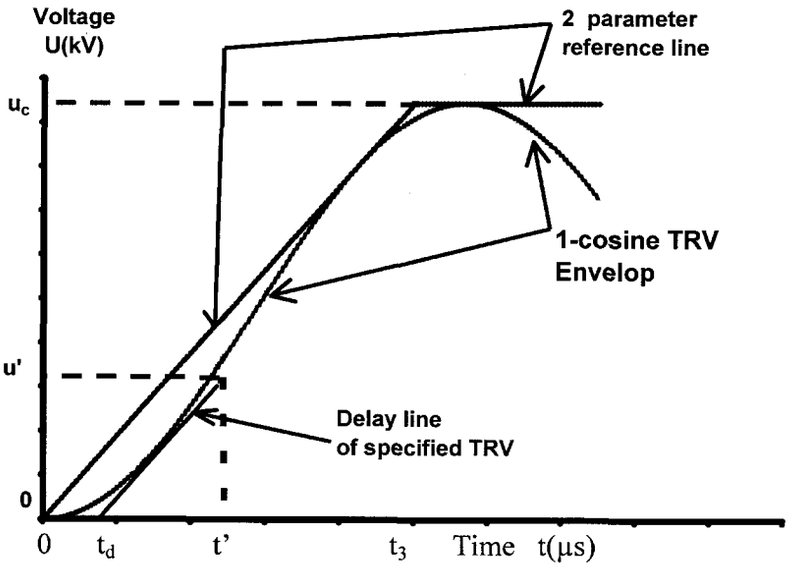

Figure D.3—Representation of the specified TRV as a two-parameter line and a delay line compared to a 1-cosine TRV waveform

There are three basic parameters for the TRV at the rated short-circuit current as follows:

U_c = The TRV peak

RRRV = The rate of rise of recovery voltage

t_3 = The time to reach U_c at the specified RRRV

The standards previously cited were studied for the rated values of the TRV in different applications and some reasonable values were chosen for this revision, IEEE Std C37.60-2003 as described in D.1, D.2, D.3, and D.4.

Copyright © 2003 IEEE. All rights reserved.

Copyright The Institute of Electrical and Electronics Engineers, Inc.
Provided by IHS under license with IEEE
No reproduction or networking permitted without license from IHS /C37.60-2003/Revises-III/C.37.60-2003.3d] Not for Resale Ref: C.37.60-2003 Page: 64 1–70

D.1 U_c = The TRV peak

U_c is simply a multiplier times the rated voltage V. For distribution voltages, the ANSI circuit breaker standard ANSI C37.06-2000 uses a multiplier of 1.88, while IEC 62271-100-2003-05 uses a value of 1.715 and the IEEE fuse standard C37.41-2000 uses values from 1.65 to 1.97. The difference between the 1.88 value used by ANSI/IEEE and the 1.715 value used by IEC is the amount of damping that was assumed by the two standards writing groups. The 1.65–1.97 range in the peak multiplier in the fuse standard is a function of the X/R ratio. The fuse standard includes the value of sin(arctan(X/R)) in the calculation of the TRV peak voltage. The fuse standard then uses very low X/R values of 1.5 to 1.8 at the voltages from 2.8 kV to 8.25 kV, which produce multipliers ranging from 1.65 to 1.73, and values of X/R of 8 or 12 at voltages from 15 kV to 38 kV, which produce multipliers ranging from 1.96 to 1.97. Since the ANSI circuit breaker standard uses an X/R of 17 and still only has a TRV peak multiplier of 1.88, it is not understood why the fuse standard uses 1.96 to 1.97 multipliers. Therefore, a single value of the peak multiplier for this revision, IEEE Std C37.60-2003 is chosen as 1.88 for all three-phase ungrounded cases of application, namely, overhead-line circuits, cable connected circuits, and low-fault current circuits where the fault current is less that 4000 A, rms.

The 1.88 multiplier includes a factor of 1.5 for the first phase to clear a three-phase ungrounded fault. For three-phase reclosers where the three poles are operated together, the second and third phases then clear the remainder of the circuit, which is a single-phase circuit, and they share the phase-to-phase voltage roughly equally. For single-phase reclosers, the worst case is when three reclosers are operated to clear a three-phase fault when there is not a close synchronism in the mechanical operation of the three units. The second unit to clear may have to do so on its own if the third phase has not yet opened and therefore the second phase will have to clear against the full phase-to-phase voltage. The TRV peak multiplier is then shown in Equation (D.1):

$$\left(\sqrt{3}/1.5\right) \times 1.88 = 2.17 \tag{D.1}$$

D.2 RRRV = The rate of rise of recovery voltage

The RRRV values are chosen for three different application conditions.

a) For reclosers applied in overhead-line distribution circuits, the RRRV numbers are based on those found in ANSI C37.06-2000 for outdoor circuit breakers. These range from 0.32 kV/μs at 3.6 kV up to 1.29 kV/μs at 38 kV.
b) For reclosers applied in cable-connected distribution circuits, the RRRV numbers are based on those found in IEC 62271-100-2003-05. These RRRV values are approximately half of those in overhead applications, so for the sake of simplicity, this revision, IEEE Std C37.60-2003, uses RRRV values that are exactly half those for overhead-line applications.
c) For reclosers applied in distribution circuits where the fault current is less that 4000 A, rms, the RRRV numbers are based on those found in the distribution fuse standard, IEEE Std C37.41-2000. The fuse RRRVs are about a quarter of those in overhead applications, so for the sake of simplicity, this revision, IEEE Std C37.60-2003, uses RRRV values that are exactly a quarter of those for overhead-line applications.

D.3 t_3 = The time to reach U_c at the specified RRRV

The values of t_3 are simply U_c/RRRV. Therefore, since the values for U_c and RRRV are defined in D.1 and D.2, t_3 is also defined.

D.4 Multipliers for TRV values at currents less than the rated short-circuit current

At currents less than the rated short-circuit current, the TRV in general reaches a higher peak and does so in a shorter time with a faster RRRV. In the ANSI circuit breaker standard, ANSI C37.06-2000,

Copyright © 2003 IEEE. All rights reserved.

Copyright The Institute of Electrical and Electronics Engineers, Inc.
Provided by IHS under license with IEEE
No reproduction or networking permitted without license from IHS
Not for Resale
[12:41 7/8/03 K:/SGML/ieee/C37.60-2003/Revises-III/C.37.60-2003.3d] Ref: C.37.60-2003 Page: 65 1–70

the TRV values of peak voltage and time to peak at fractions of the rated short-circuit current are obtained by multiplying the TRV values at the rated short-circuit current by a set of multipliers. These multipliers are defined in the ANSI circuit breaker standards at currents of 7%, 30%, and 60% of the rated short-circuit current. The lowest fraction in IEC is 10%, so the multipliers from the ANSI standard at 7% were assumed to be the same at 10%. The multipliers for the recloser standard at 20% and 50% of the rated short-circuit current were obtained by interpolation between the existing values. The multipliers are shown below in tabular and graphical form (Table D.1, Figure D.4).

Table D.1—Table of TRV multipliers for reclosers

	Per unit rated current	Peak multiplier K_{uc}	t_3 Multiplier K_{t_3}	RRRV multiplier = K_{uc}/K_{t_3}
From ANSI C37.06-2000	0.10	1.17	0.400	2.925
Interpolated	**0.20**	**1.15**	**0.401**	**2.868**
From ANSI C37.06-2000	0.30	1.13	0.401	2.825
Interpolated	**0.50**	**1.09**	**0.582**	**1.879**
From ANSI C37.06-2000	0.60	1.08	0.673	1.597
From ANSI C37.06-2000	**1.00**	**1.00**	**1.000**	**1.000**

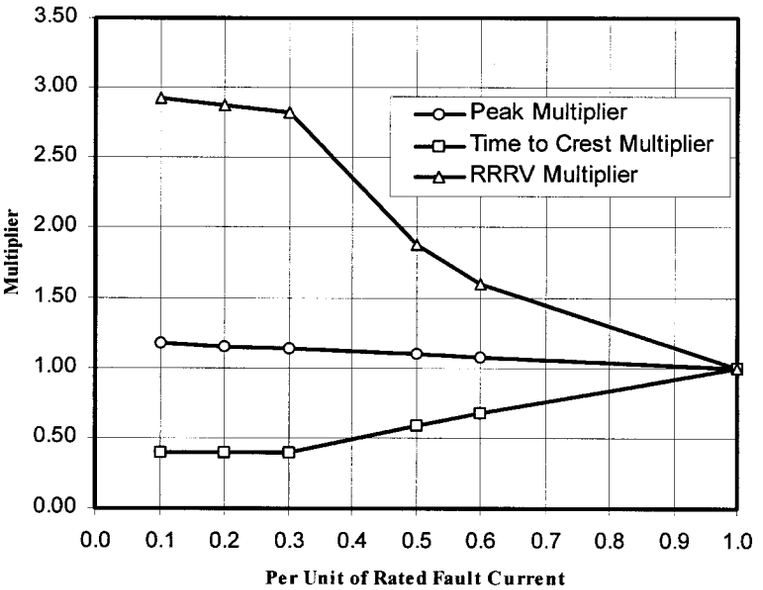

Figure D.4—TRV multipliers for reclosers

For fault currents less than 4000 A rms, the multipliers for the TRV peak voltage and time to peak are set at 1.0 since the fuse standard does not differentiate these values at currents less than the rated short-circuit current.

Copyright © 2003 IEEE. All rights reserved.

Copyright The Institute of Electrical and Electronics Engineers, Inc.
Provided by IHS under license with IEEE
No reproduction or networking permitted without license from IHS Not for Resale
[12:41 7/8/03 K:/SGML/ieee/C37.60-2003/Revises-III/C.37.60-2003.3d] Ref: C.37.60-2003 Page: 66 1–70

Annex E

(informative)

Altitude correction factors

E.1 Introduction

Altitude corrections factors have been removed from this standard due to the current controversy regarding their use, particularly in the range of sea level to 1000 m. Altitude correction factors are being studied by the Switchgear Committee and will be adopted by issuance of a supplement or revision to this standard when they are approved. At that time, this informative annex will be removed. The following information presents the altitude correction factor proposal from the initial draft of IEEE PC37.100.1, Draft Standard Requirements for Power Switchgear. The information is provided for reference only.

E.2 Altitude correction factors

Most switchgear is tested with reference to Normal Temperature and Pressure at Sea Level (NTP) (25 °C, 298 °K, and 101.3 kPa, 1.013 mbar). An added safety factor allows normal use at altitudes up to 1000 m. For installation of switchgear, rated for up to 1000 m, at altitudes above 1000 m, the insulation level of external insulation under the standardized reference atmospheric conditions shall be determined by multiplying the insulation withstand voltages by a factor *K*.

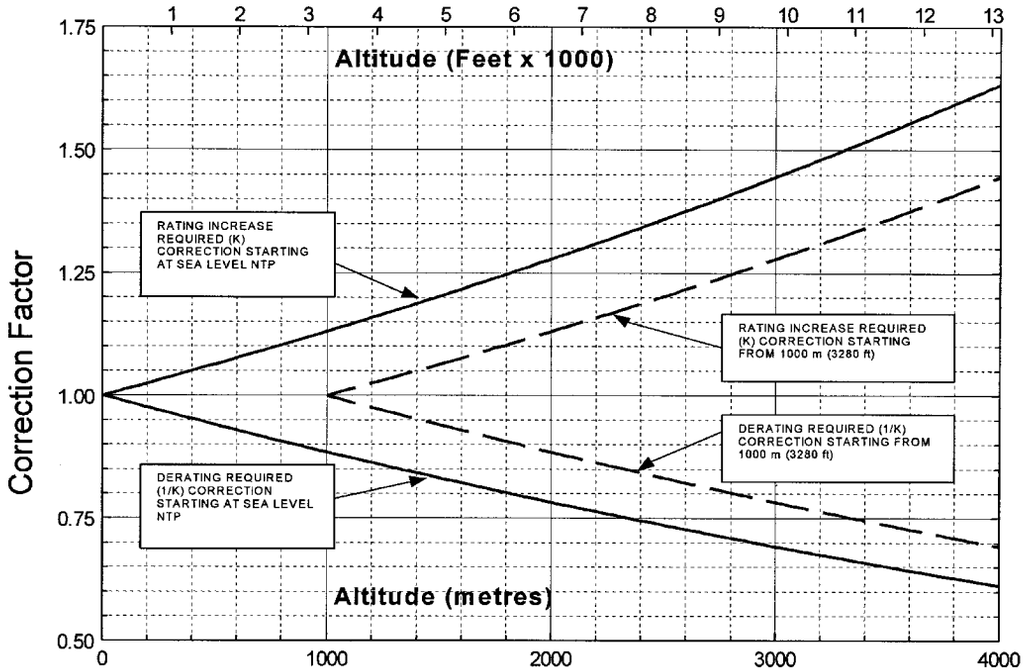

Figure E.1—Altitude correction factors

Copyright © 2003 IEEE. All rights reserved.

Copyright The Institute of Electrical and Electronics Engineers, Inc.
Provided by IHS under license with IEEE
No reproduction or networking permitted without license from IHS
Not for Resale
[12:42 7/8/03 K:/SGML/ieee/C37.60-2003/Revises-III/C.37.60-2003.3d]
Ref: C.37.60-2003
Page: 67
1–70

Table E.1—Altitude correction factors

Altitude in metres (ft)	Rating increase required starting from 1000 m ($M = 1$)	Derating required starting from 1000 m ($M = 1$)	Rating increase required starting from sea level ($M = 1$)	Derating required starting from sea level ($M = 1$)
0			1.000	1.000
500 (1641)			1.063	0.940
1000 (3281)	1.000	1.000	1.131	0.885
1500 (4923)	1.063	0.940	1.202	0.832
2000 (6562)	1.131	0.885	1.278	0.782
2500 (8203)	1.202	0.832	1.359	0.736
3000 (9843)	1.278	0.782	1.445	0.692
3500 (11 484)	1.359	0.736	1.536	0.651
4000 (13 124)	1.445	0.692	1.634	0.612

NOTE—At a 1000 m application altitude, if not already rated for 1000 m, there is a 13.1% increase in withstand requirement or 11.5% decrease in withstand capability from sea-level NTP rating.

Table E.2—Correction factors

For correction factor starting at 1000 m	For correction factor starting at sea level
$k = e^{M(H-1000)/8150}$	$k = e^{M(H)/8150}$
H = altitude (metres)	
$M = 1$ for power-frequency, lightning impulse, and phase-to-phase switching impulse voltages	
$M = 0.9$ for longitudinal switching impulse voltage	
$M = 0.75$ for phase-to-ground switching impulse voltage	

NOTES
1—Switchgear rated for up to 1000 m will also be capable of higher withstand voltage when used at less than 1000 m.
2—For insulation not exposed to ambient atmospheric pressure, the dielectric characteristics are identical at any altitude and no special precautions need to be taken.
3—For low-voltage auxiliary and control equipment, no special precautions need to be taken if the altitude is 2000 m or less. For higher altitude; see IEEE Std C37.20.1™-2002 [B9].

There is no requirement to confirm the test at the required altitude.

- The factor K for the required *increase* in insulation withstand rating for *equipment already rated for up to 1000 m* is $K = e^{(M(H-1000)/8150)}$.
- The factor K for the required *decrease* in insulation withstand rating for *equipment already rated for up to 1000 m* is $K = (1/K_{1000\,m})$ in accordance with Figure E.1 and Table E.1.

These correction factors are further defined in Table E.2.

Figure E.1 is based on:

$M = 1$ for power-frequency, lighting impulse and phase-to-phase switching impulse voltages.
$M = 0.9$ for longitudinal switching impulse voltage.
$M = 0.75$ for phase-to-ground switching impulse voltage.

Copyright © 2003 IEEE. All rights reserved.

Copyright The Institute of Electrical and Electronics Engineers, Inc.
Provided by IHS under license with IEEE
No reproduction or networking permitted without license from IHS Not for Resale
[12:42 7/8/03 K:/SGML/ieee/C37.60-2003/Revises-III/C.37.60-2003.3d] Ref: C.37.60-2003 Page: 68 1–70

E.3 Examples for switchgear with 110 kV/BIL *already rated for 1000 m*

Example 1: The required *increase* in voltage withstand for installation at 2000 m is given by Equation (E.1) and Equation (E.2):

$$K_{1000\,\mathrm{m}} = \mathrm{e}^{M(H-1000)/8150} \tag{E.1}$$

where

$$\mathrm{e} = 2.7183$$
$$M = 1$$
$$H = 2000$$

$$K_{1000\,\mathrm{m}} = 2.7183^{1(2000-1000)/8150} = 1.131 \text{ correction factor} \tag{E.2}$$

$1.131 \times 110\,\mathrm{kV} = 124.4\,\mathrm{kV}$ BIL, indicating 125 kV BIL equipment should be chosen for the required 110 kV BIL equivalent at 2000 m.

Example 2: The *decrease* in voltage withstand when installed at 2000 m for equipment rated 110 kV BIL at 1000 m is given by Equation (E.3):

$$1/K_{1000\,\mathrm{m}} = 1/1.131 = 0.884 \text{ correction factor} \tag{E.3}$$

$0.884 \times 110\,\mathrm{kV}$ BIL $= 97.3\,\mathrm{kV}$, (a 11.6% reduction of safety factor).

E.4 Examples for switchgear ratings based on 110 kV BIL withstand tests *referred to sea-level NTP without adjustment for 1000 m*

Example 3: The required *increase* in voltage withstand for installations at 2000 m is given by Equation (E.4):

$$K_{\mathrm{NTP}} = \mathrm{e}^{M(H)/8150}$$
$$K_{\mathrm{NTP}} = 2.7183^{1(2000)/8150} \tag{E.4}$$
$$K_{\mathrm{NTP}} = 1.278 \text{ correction factor; required equivalent increase}$$

$1.278 \times 110\,\mathrm{kV} = 140.6\,\mathrm{kV}$ BIL required equivalent for 2000 m when tested at sea-level NTP without 1000 m safety factor.

Example 4: The decrease in voltage withstand at 2000 m for 110 kV BIL equipment tested at sea level is given by Equation (E.5):

$$1/K_{\mathrm{NTP}} = 1/1.278 = 0.782 \text{ correction factor} \tag{E.5}$$

$0.782 \times 110\,\mathrm{kV} = 86.1\,\mathrm{kV}$ BIL (a reduction of 21.8% safety factor from sea level).

Copyright © 2003 IEEE. All rights reserved.

Copyright The Institute of Electrical and Electronics Engineers, Inc.
Provided by IHS under license with IEEE
No reproduction or networking permitted without license from IHS
Not for Resale
[12:42 7/8/03 K:/SGML/ieee/C37.60-2003/Revises-III/C.37.60-2003.3d] Ref: C.37.60-2003 Page: 69 1–70

Annex F

(informative)

Bibliography

[B1] AEIC CS8-2000, Specification for Extruded Dielectric Shielded Power Cables Rated 5 through 46 kV.[16]

[B2] CSA C22.2 No. 31-1989, Switchgear Assemblies; Industrial Products.[17]

[B3] IEC 60255-22-1-1988, Electrical Relays—Part 22: Electrical Disturbance Tests for Measuring Relays and Protection Equipment—Part 1: 1 MHz Burst Disturbance Tests.

[B4] IEC 60255-22-2-1996, Electrical Relays—Part 22: Electrical Disturbance Tests for Measuring Relays and Protection Equipment—Section 2: Electrostatic Discharge Tests.

[B5] IEC 60255-22-3-2000, Electrical Relays—Part 22: Electrical Disturbance Tests for Measuring Relays and Protection Equipment—Section 3: Radiated Electromagnetic Field Disturbance Tests.

[B6] IEC 60255-22-4-1992, Electrical Relays—Part 22: Electrical Disturbance Tests for Measuring Relays and Protection Equipment—Section 4: Electrical Fast Transient/Burst Immunity Test.

[B7] IEC 60255-22-6-1988, Electrical Relays—Part 6: Electrical Disturbance Tests for Measuring Relays and Protection Equipment—Section 6: Immunity to Conducted Disturbance Induced by Radio Frequency Fields.

[B8] IEEE Std 433-1979 (Reaff 1979), IEEE Recommended Practice for Insulation Testing of Large AC Rotating Machinery with High Voltage at Very Low Frequency.[18]

[B9] IEEE Std C37.20.1-2002, IEEE Standard for Metal-Enclosed Low-Voltage Power Circuit Breaker Switchgear.

[B10] IEEE Std C37.90-1989 (Reaff 1994), IEEE Standard for Relays and Relay Systems Associated with Electric Power Apparatus.

[B11] IEEE Std C37.90.2-1995 (Reaff 2001), IEEE Standard for Withstand Capability of Relay Systems to Radiated Electromagnetic Interference from Transceivers.

[B12] IEEE Std C37.90.3-2001, IEEE Standard Electrostatic Discharge Tests for Protective Relays.

[B13] IEEE PC37.100.1, Draft Standard Requirements for Power Switchgear.[19]

[16]AEIC publications are available from the Association of Edison Illuminating Companies, 600 N. 18th Street, P.O. Box 2641, Birmingham, AL 35291-0992, USA (http://www.aeic.org/). AEIC publications are also available from Global Engineering Documents, 15 Inverness Way East, Englewood, CO 80112-5704, USA (http://global.ihs.com/).

[17]CSA publications are available from the Canadian Standards Association (Standards Sales), 178 Rexdale Blvd., Etobicoke, Ontario, Canada M9W 1R3 (http://www.csa.ca/).

[18]The IEEE standards or products referred to in Annex F are trademarks owned by the Institute of Electrical and Electronics Engineers, Inc.

[19]This IEEE standards project was not approved by the IEEE-SA Standards Board at the time this publication went to press. For information about obtaining a draft, contact the IEEE.

Copyright © 2003 IEEE. All rights reserved.

--`,,`,,`,,-`-`,,`,,`,`,,`---
Copyright The Institute of Electrical and Electronics Engineers, Inc.
Provided by IHS under license with IEEE
No reproduction or networking permitted without license from IHS
Not for Resale
[12:42 7/8/03 K:/SGML/ieee/C37.60-2003/Revises-III/C.37.60-2003.3d] Ref: C.37.60-2003 Page: 70 1–70