American National Standard

Specification for High-Voltage Expulsion Type Distribution Class Fuses, Cutouts, Fuse Disconnecting Switches and Fuse Links

Approved 1/6/97

American National Standards Institute, Inc.

The Institute of Electrical and Electronics Engineers, Inc.
3 Park Avenue, New York, NY 10016-5997, USA

Copyright © 2003 by the Institute of Electrical and Electronics Engineers, Inc.
All rights reserved. Printed in the United States of America.

Print: ISBN 0-7381-3606-6 SH95099
PDF: ISBN 0-7381-3607-7 SS95099

No part of this publication may be reproduced in any form, in an electronic retrieval system or otherwise, without the prior written permission of the publisher.

Copyright The Institute of Electrical and Electronics Engineers, Inc.
Provided by IHS under license with IEEE
No reproduction or networking permitted without license from IHS Not for Resale

American National Standard

Approval of an American National Standard requires verification by ANSI that the requirements for due process, consensus, and other criteria for approval have been met by the standards developer.

Consensus is established when, in the judgment of the ANSI Board of Standards Review, substantial agreement has been reached by directly and materially affected interests. Substantial agreement means much more than a simple majority, but not necessarily unanimity. Consensus requires that all views and objections be considered, and that a concerted effort be made toward their resolution.

The use of American National Standards is completely voluntary; their existence does not in any respect preclude anyone, whether he has approved the standards or not, from manufacturing, marketing, purchasing, or using products, processes, or procedures not conforming to the standards.

The American National Standards Institute does not develop standards and will in no circumstances give an interpretation of any American National Standard. Moreover, no person shall have the right or authority to issue an interpretation of an American National Standard in the name of the American National Standards Institute. Requests for interpretations should be addressed to the secretariat or sponsor whose name appears on the title page of this standard.

CAUTION NOTICE: This American National Standard may be revised or withdrawn at any time. The procedures of the American National Standards Institute require that action be taken periodically to reaffirm, revise, or withdraw this standard. Purchasers of American National Standards may receive current information on all standards by calling or writing the American National Standards Institute.

--`,,`,,`-`-`,,`,,`,`,,`---

Copyright The Institute of Electrical and Electronics Engineers, Inc.
Provided by IHS under license with IEEE
No reproduction or networking permitted without license from IHS Not for Resale

FOREWORD

(This Foreword is not part of American National Standard C37.42-1996)

This standard is a revision of ANSI C37.42-1989, to bring it up to date and in line with present day requirements for high-voltage fuses, fuse links and fuse disconnecting switches.

This standard was prepared by the NEMA High Voltage Fuse Technical Committee with cooperation from the IEEE Subcommittee on High Voltage Fuses. Liaison was maintained with Edison Electric Institute (EEI) and International Electrotechnical Commission (IEC) during the development of the revisions in order to incorporate the latest thinking up to the time of publication.

This standard is one of a series of complementary standards covering various types of high-voltage fuses and switches, arranged so that certain standards apply to all devices while other standards provide additional specifications for a particular device. For any device, ANSI/IEEE C37.40-1993, ANSI/IEEE C37.41-1994, plus the additional standard covering that device, constitute a complete standard for the device. In addition, ANSI/IEEE C37.48-1987 (R1992) is an application, operation, and maintenance guide for all the devices.

The following standards make up this series:

ANSI/IEEE C37.40-1993, Service Conditions and Definitions for High-Voltage Fuses, Distribution Enclosed Single-Pole Air Switches, Fuse Disconnecting Switches, and Accessories

ANSI/IEEE C37.41-1994, Design Tests for High-Voltage Fuses, Distribution Enclosed Single-Pole Air Switches, Fuse Disconnecting Switches, and Accessories

ANSI C37.42-1996, Specifications for High Voltage Expulsion Type Distribution Class Fuses, Cutouts, Fuse Disconnecting Switches and Fuse Links

ANSI C37.44-1981 (R 1992), Specifications for High Voltage Distribution Class Oil Cutouts and Fuse Links

ANSI C37.45-1981 (R 1992), Specifications for High Voltage Distribution Class Enclosed Single-Pole Air Switches

ANSI C37.46-1981 (R 1992), Specifications for High Voltage Expulsion and Current-Limiting Type Power Class Fuses and Fuse Disconnecting Switches

ANSI C37.47-1981 (R 1992), Specifications for High Voltage Current-Limiting Type Distribution Class Fuses and Fuse Disconnecting Switches

ANSI/IEEE C37.48-1987 (R1992), Guide for Application, Operation, and Maintenance of High Voltage Fuses, Distribution Enclosed Single-Pole Air Switches, Fuse Disconnecting Switches, and Accessories

Suggestions for improvement of this standard will be welcomed. They should be sent to the National Electrical Manufacturers Association, 1300 North 17th Street, Rosslyn, VA 22209.

This standard was processed and approved for submittal to ANSI by Accredited Standards Committee on Power Switchgear, C37. Committee approval of the standard does not necessarily imply that all the committee members voted for its approval. At the time it approved this standard, the C37 Committee had the following members:

--`,,`-`-`,,`,,`,`,,`---

Copyright The Institute of Electrical and Electronics Engineers, Inc.
Provided by IHS under license with IEEE
No reproduction or networking permitted without license from IHS
Not for Resale

E. Byron, *Chair*
A.K. McCabe *(Executive Vice-Chairman, HV Standards)*
J. Scott *(Executive Vice-Chairman, LV Standards)*
D.L. Swindler *(Executive Vice-Chairman, IEC Activities)*
M. Calwise, *Secretary*

Organizations Represented	*Name of Representative*
Electric Light and Power Group	D.E. Galicia D.G. Komassa J.L. Koepfinger M.C. Mingoia J.H. Provanzana T.E. Bruck (Alt)
Institute of Electrical and Electronics Engineers	L.R. Beard P.W. Dwyer A. Monroe D.F. Peelo D. Sigmon S.C. Atkinson (Alt) D.G. Kumbera (Alt) L.V. McCall (Alt)
National Electrical Manufacturers Association	R. Garzon G. Haynes W. Kracht H.L. Miller T. Olsen D. Stone E. Byron (Alt) G.T. Jones (Alt) G. Sakats (Alt) D.L. Swindler (Alt)
Testing Laboratory Group	L. Frier P. Notarian
Tennessee Valley Authority	D.N. Reynolds
U.S. Dept. Of the Army-Office of the Chief of Engineers	J.A. Gildon
U.S. Dept. of the Navy-Naval Construction Battalion Cntr.	R.R. Nicholas
Western Area Power Administration	G.D. Birney

The NEMA High Voltage Fuse Technical Committee that developed this standard had the following membership:

R. Ranjan, *Chair*
M. C. Calwise *(Program Administrator)*

M. Allison	R. Duncan	J.S. Schaffer
L.R. Beard	S.P. Hassler	G. Smith
W.R. Crooks		J.S. Wall

Copyright The Institute of Electrical and Electronics Engineers, Inc.
Provided by IHS under license with IEEE
No reproduction or networking permitted without license from IHS
Not for Resale

Other individuals who have contributed in the development of this standard are as follows:

R.H. Arndt
J.G. Leach
J.R. Marek

The C37 Subcommittee on High-Voltage Fuses had the following members:

R.H. Arndt, *Chair*

L.R. Beard
R.L. Capra
D.R. Clark
W.R. Crooks
H.E. Foelker
J.G. Leach
J.R. Marek
W. Mikulecky
F.J. Muench
R. Ranjan
T.E. Royster
J.G. St. Clair
E.W. Schmunk

The IEEE High-Voltage Fuse Subcommittee had the following members:

L.R. Beard, *Chair*

J. Angelis
R.H. Arndt
J.L. Barger
T.A. Bellei
R.L. Capra
W.R. Crooks
H.E. Foelker
P. Hassler
W.J. Huber
J.G. Leach
J.R. Marek
F.J. Muench
H.M. Pflanz
R. Ranjan
T.E. Royster
J.G. St. Clair
J.S. Schaffer
E.W. Schmunk
V.M. Scuderi
J.G. Wood
J. Zawadzki

Copyright The Institute of Electrical and Electronics Engineers, Inc.
Provided by IHS under license with IEEE
No reproduction or networking permitted without license from IHS
Not for Resale

CLAUSE PAGE

1. Scope 1

2. Referenced standards 1

2.1 Referenced American National Standards 1
2.2 Other referenced standards 2

3. Distribution class open, enclosed and open-link fuses and cutouts and fuse disconnecting switches 2

3.1 General rating information 2
3.2 Preferred ratings and performance requirements 3
3.3 Design test requirements 7
3.4 Conformance tests 9
3.5 Construction requirements 9
3.6 Nameplate marking for distribution class open, enclosed, and open-link fuses and cutouts 16
3.7 Application requirements 18

4. Fuse links for distribution class open, enclosed, and open-link fuses and cutouts 18

4.1 General rating information 18
4.2 Preferred ratings and performance requirements 18
4.3 Time-current-characteristic requirements for universal fuse links used in distribution class open, enclosed, and open-link fuses and cutouts 19
4.4 Mechanical interchangeability requirements for universal fuse links for open and enclosed type fuses and cutouts 20
4.5 Mechanical interchangeability requirements for universal open-link fuse links 24
4.6 Tensile withstand strength 24
4.7 Design test requirements 24
4.8 Nameplate marking 25
4.9 Application requirements 25

Copyright The Institute of Electrical and Electronics Engineers, Inc.
Provided by IHS under license with IEEE
No reproduction or networking permitted without license from IHS
Not for Resale

Specifications For High Voltage Expulsion Type Distribution Class Fuses, Cutouts, Fuse Disconnecting Switches And Fuse Links

1. Scope

This standard establishes specifications for high voltage (above 1000 volts) expulsion type distribution class fuses, cutouts, fuse disconnecting switches, fuse links and associated accessories. All of these devices are intended for use on alternating current distribution systems. These specifications apply to the following specific types of equipment:

a) Open, enclosed, and open link types of fuses and cutouts.
b) Open and enclosed fuse disconnecting switches
c) Fuse supports, fuse mountings and fuse hooks of the type used exclusively with distribution class fuses, cutouts, and fuse disconnecting switches.
d) Removable switch blades of the type used exclusively with distribution class fuses, cutouts, and fuse disconnecting switches.
e) Fuse links of the type used exclusively with distribution class fuses, cutouts, and fuse disconnecting switches.

The fuses listed above are the same as those covered in IEC 282-2. The open and enclosed types of “distribution” class fuses and cutouts are the same as the class “A” fuses and cutouts covered in that document.

2. Referenced standards

2.1 Referenced American National Standards

This standard is intended to be used in conjunction with the following American National Standards. When these referenced American National Standards are superseded by a revision approved by the American National Standards Institute, Inc., the revision shall apply:

ANSI/ASME B1.1-1989, *Unified Inch Screw Threads (UN and UNR Thread Form)*

--`,,`-`-`,,`,,`,`,,`---

Copyright The Institute of Electrical
Provided by IHS under license with
No reproduction or networking perm

Copyright © 2003 IEEE. All rights reserved.

ANSI/ASME B18.5-1990, *Round Head Bolts (Inch Series)*

ANSI/ASME B18.2.2-1987 (R1993), *Square and Hex Nuts (Inch Series)*

ANSI/IEEE C37.40-1993, *Service Conditions and Definitions for High-Voltage Fuses, Distribution Enclosed Single-Pole Air Switches, Fuse Disconnecting Switches, and Accessories*

ANSI/IEEE C37.41-1994, *Design Tests for High-Voltage Fuses, Distribution Enclosed Single-Pole Air Switches, Fuse Disconnecting Switches, and Accessories*

ANSI/IEEE C37.48-1987 (R1992), *Guide for Application, Operation, and Maintenance of High Voltage Fuses, Distribution Enclosed Single-Pole Air Switches, Fuse Disconnecting Switches, and Accessories*

2.2 Other referenced standards

This standard is also intended to be used in conjunction with the following standards:

ASTM A153-82 (1987), *Specifications for Zinc Coating (Hot-Dip) on Iron and Steel Hardware*

ASTM A575-89, *Specifications for Steel Bars, Carbon, Merchant Quality, M-Grades*

IEC 282-2-1995, *High Voltage Fuse - Part 2, Expulsion Fuses*

3. Distribution class open, enclosed and open-link fuses and cutouts and fuse disconnecting switches

3.1 General rating information

The ratings of distribution class fuses and cutouts shall be determined with tests performed using the usual service conditions defined in Clause 2 of ANSI/IEEE C37.40, except where other conditions are specified, and shall include:

a) Rated maximum voltages, determined by the dielectric and current interrupting design tests specified in 3.3.1 and 3.3.2, respectively.
b) Rated continuous current, determined by the temperature-rise design tests at the rated continuous current specified in 3.3.6.
c) Rated interrupting current (breaking capacity), determined by the current interrupting design tests specified in 3.3.2.
d) Rated short time currents (momentary, 15-cycle, and 3-second), determined by the design tests specified in 3.3.5.
    1) The rated momentary short-time current is the RMS value of current, including the direct-current component, that occurs in the first maximum offset current loop of the design tests specified above. The rated momentary current value for any device is based on its 15 cycle rated short time current multiplied by the appropriate asymmetry factor associated with the X/R specified. This rating provides an index of the device's ability to withstand the electromagnetic forces that occur under maximum short-circuit conditions.
    2) The rated 15-cycle short-time current is based on the maximum rated symmetrical interrupting current of any fuseholder that is interchangeable with the disconnecting blade of the disconnecting cutout. This rating provides an index of the device's ability to withstand the electromagnetic forces and the heat that may be generated under short-circuit conditions.
    3) The rated 3-second short time rating provides an index of the device's ability to withstand the heat that may be generated under long time short circuit conditions.

Copyright The Institute of Electrical
Provided by IHS under license with
No reproduction or networking perm

Copyright © 2003 IEEE. All rights reserved.

e) Basic impulse insulation level (BIL), determined by the impulse withstand tests specified in 3.3.1.
f) Rated frequency, as specified in 3.2.2.
g) Rated load-break current (when provision is made for load-break operation), determined by the design tests specified in 3.3.3.

3.2 Preferred ratings and performance requirements

3.2.1 Rated voltage, rated continuous current, rated interrupting current, rated short time current and basic impulse insulation level (BIL)

The rated maximum voltage, rated continuous current, rated symmetrical interrupting current, rated short time current and basic impulse insulation level for distribution class fuses and cutouts shall be as specified in tables 1A and 1B. Column 1 in table 1A and columns 1 and 2 in table 1B list the preferred maximum voltage ratings to be used for future new designs. Column 1a in table 1A and column 1a and 2a in table 1B list the preferred maximum voltage ratings of devices now being manufactured and used. Distribution class open type fuses and cutouts may have a single-voltage-rating or a slant-voltage-rating (multiple-voltage-rating). Application information and selection guidance for these devices is presented in ANSI/IEEE C37.48.

The asymmetrical interrupting current values listed in tables 1A and 1B are for information purposes only. For additional information on ratios of asymmetrical to symmetrical values (multiplication factor) see annex “C” ANSI/IEEE C37.41.

The X/R values listed in tables 1A and 1B are the values used for the high current interrupting tests. See the tables in clause 6 of ANSI/IEEE C37.41 for the X/R values used for the tests performed at lower currents.

The identifying color (color coding) specified in 2.5.1 and the terminal sizes specified in 2.5.6 listed in tables 1A and 1B are construction requirements and are not ratings.

3.2.2 Rated frequency

The rated frequency for distribution fuses and cutouts shall be 50 Hz, 60 Hz, or both.

3.2.3 Rated load-break current for distribution class load-break fuses and cutouts

The rated load-break current of distribution class load-break open, enclosed, and open-link fuses and cutouts shall be the rated continuous current of the fuses and cutouts, as specified in column 2 of table 1A and column 3 of table 1B.

3.2.4 Performance requirements

The performance requirements of distribution class fuses and cutouts of the open, enclosed and open-link type shall include:

a) Power-frequency dry-withstand voltages as specified in 3.3.1.
b) Impulse voltages as specified in 3.3.1.
c) Power-frequency wet-withstand voltages as specified in 3.3.1.
d) Temperature-rise limitations as specified in 3.3.6.
e) Radio-influence levels as specified in 3.3.4.

3.2.5 Ratings and performance requirements other than preferred

Special circuit or environmental conditions may require devices with ratings or performance requirements that are different from the preferred values specified above. For these devices the ratings and the performance requirements shall be agreed upon by the user and the manufacturer.

Copyright The Institute of Electrical
Provided by IHS under license with
No reproduction or networking perm

Copyright © 2003 IEEE. All rights reserved.

Table 1A —Rated maximum voltage, rated continuous current, rated Interrupting current, rated short-time current, and basic insulation level (BIL) for enclosed fuses and cutouts

Fuses, Fuse Cutouts and Disconnecting Cutouts		Fuses and Fuse Cutouts								Disconnecting Cutouts					Fuses, Fuse Cutouts and Disconnecting Cutouts		
Rated Maximum Voltage* (kV,rms)		Rated Continuous Current (amps)	Rated Interrupting Current at .5 Rated Maximum Voltage (kA rms)		Rated Interrupting Current at Rated Maximum Voltage (kA rms)		Identifying Color†	Nom.‡	X\R Ratio	Rated Continuous Current (amps)	Rated Short-Time Current (kiloamperes)			Identifying Color†	BIL (kilovolts)	Dimensional Range of Copper Conductor Sizes to be Accommodated by Terminals, Minimum to Maximum**	
Single Voltage Rated			Sym	Asym††	Sym	Asym††					(Momentary)	15 cycle	3 seconds			Inches	Millimeters
Col 1	Col 1a	Col 2	Col 3	Col 4	Col 5	Col 6	Col 7	Col 8	Col 9	Col 10	Col 11	Col 12	Col 13	Col 14	Col 15	Col 16	
5.5	5.2	50	2.5	3.0	1.6	2.0	—	ND	5	100	8.0	6.3	1.6	Red	60	0.128–0.316	3.25–8.03
5.5	5.2	50	6.3	8.0	4.0	5.0	Yellow	HD	5	100	8.0	6.3	1.6	Red	60	0.128–0.316	3.25–8.03
5.5	5.2	100	4.0	5.0	2.5	3.0	—	ND	5	200	14.0	11.2	3.2	Red	60	0.162–0.447	4.11–11.35
5.5	5.2	100	6.3	8.0	4.0	5.0	Yellow	HD	5	200	14.0	11.2	3.2	Red	60	0.162–0.447	4.11–11.35
5.5	5.2	100	11.2	14.0	8.0	10.0	White (Silver)	EHD	5	200	14.0	11.2	3.2	Red	60	0.162–0.447	4.11–11.35
5.5	5.2	200	11.2	14.0	8.0	10.0	Yellow	HD	5	300	20.0	16.0	5.0	Red	60	0.289–0.575	7.34–14.61
5.5	5.2	200	16.0	20.0	12.5	15.0	White (Silver)	EHD	5	300	20.0	16.0	5.0	Red	60	0.289–0.575	7.34–14.61
8.3	7.8	50	—	—	1.4	2.0	—	ND	8	100	8.0	6.3	1.6	Red	75	0.128–0.316	3.25–8.03
8.3	7.8	50	—	—	2.8	4.0	Yellow	HD	8	100	8.0	6.3	1.6	Red	75	0.128–0.316	3.25–8.03
8.3	7.8	100	—	—	2.8	4.0	—	ND	8	200	14.0	11.2	3.2	Red	75	0.162–0.447	4.11–11.35
8.3	7.8	100	—	—	5.6	8.0	White (Silver)	EHD	8	200	14.0	11.2	3.2	Red	75	0.162–0.447	4.11–11.35

*See Clause 3.2.1
†Color coding is not a requirement for compliance to this standard (see Clause 3.2.3)
‡Interrupting Rating Nomenclature: ND-Normal duty; HD - heavy duty; EHD - extra heavy duty.
**Terminal Sizes are construction requirements and are not ratings.
††Asymmetrical values are provided for information only

--`,,`-`-`,,`,,`,`,,`---

Copyright The Institute of Electrical and Electronics Engineers, Inc.
Provided by IHS under license with IEEE
No reproduction or networking permitted without license from IHS

Copyright © 2003 IEEE. All rights reserved.

Table 1B —Rated maximum voltage, rated continuous current, rated interrupting current, rated short-time current, and basic Insulation level (BIL) for fuses and cutouts of the open and open link type

OPEN TYPE															
Fuses, Fuse Cutouts and Disconnecting Cutouts				Fuses and Fuse Cutouts					Disconnecting Cutouts				Fuses, Fuse Cutouts and Disconnecting Cutouts		
Rated Maximum Voltage* (kV,rms)				Rated Continuous Current (amps)	Rated Interrupting Current (kA rms)		Nom.†	X\R Ratio	Rated Continuous Current (amps)	Rated Short-Time Current (kiloamperes)			BIL (kilovolts)	Dimensional Range of Copper Conductor Sizes to be Accommodated by Terminals, Minimum to Maximum ‡	
Single Voltage Rated		Slant Voltage Rated			Sym	Asym**				Momentary	15 cycle	3 sec.		Inches	Millimeters
Col 1	Col 1a	Col 2	Col 2a	Col 3	Col 4	Col 5	Col 6	Col 7	Col 8	Col 9	Col 10	Col 11	Col 12	Col 13	
8.3	7.8	—	—	100	3.55	5.0	HD	8	200	10.0	7.1	1.6	75	0.162–0.447	4.11–11.35
8.3	7.8	—	—	100	7.1	10.0	EHD	8	200	10.0	7.1	1.6	75	0.162–0.447	4.11–11.35
8.3	7.8	—	—	100	13.2	20.0	UHD	12	200	20.0	13.2	1.6	75	0.162–0.447	4.11–11.35
8.3	7.8	—	—	200	2.8	4.0	ND	8	300	12.0	8.6	3.2	75	0.257–0.575	6.53–14.61
8.3	7.8	—	—	200	8.6	12.0	HD	8	300	12.0	8.6	3.2	75	0.257–0.575	6.53–14.61
8.3	7.8	—	—	200	13.2	20.0	EHD	12	300	20.0	13.2	3.2	75	0.257–0.575	6.53–14.61
8.3	7.8	—	—	200	15.0	22.5	UHD	12	300	22.5	15.0	3.2	75	0.257–0.575	6.53–14.61
15.5	15.0	8.3/15.5	7.8/15.0	100	2.8	4.0	HD	8	200	10.0	7.1	1.6	95	0.162–0.447	4.11–11.35
15.5	15.0	8.3/15.5	7.8/15.0	100	5.6	8.0	EHD	8	200	10.0	7.1	1.6	95	0.162–0.447	4.11–11.35
15.5	15.0	8.3/15.5	7.8/15.0	100	10.6	16.0	UHD	12	200	16.0	10.6	1.6	95	0.162–0.447	4.11–11.35
15.5	15.0	8.3/15.5	7.8/15.0	200	2.8	4.0	ND	8	300	12.0	8.6	3.2	95	0.257–0.575	6.53–14.61
15.5	15.0	8.3/15.5	7.8/15.0	200	7.1	10.0	HD	8	300	12.0	8.6	3.2	95	0.257–0.575	6.53–14.61
15.5	15.0	8.3/15.5	7.8/15.0	200	10.6	16.0	EHD	12	300	20.0	13.2	3.2	95	0.257–0.575	6.53–14.61
15.5	15.0	8.3/15.5	7.8/15.0	200	13.2	20.0	UHD	12	300	20.0	13.2	3.2	95	0.257–0.575	6.53–14.61
27.0	27.0	15.5/27.0	15.0/27.0	100	2.5	3.5	HD	8	200	6.0	4.0	1.6	125	0.162–0.447	4.11–11.35
27.0	27.0	15.5/27.0	15.0/27.0	100	4.0	6.0	EHD	12	200	6.0	4.0	1.6	125	0.162–0.447	4.11–11.35

Copyright The Institute of Electrical and Electronics Engineers, Inc.
Provided by IHS under license with IEEE
No reproduction or networking permitted without license from IHS

Copyright © 2003 IEEE. All rights reserved.

OPEN TYPE															
Fuses, Fuse Cutouts and Disconnecting Cutouts				Fuses and Fuse Cutouts					Disconnecting Cutouts				Fuses, Fuse Cutouts and Disconnecting Cutouts		
Rated Maximum Voltage* (kV,rms)				Rated Continuous Current (amps)	Rated Interrupting Current (kA rms)		Nom.†	X\R Ratio	Rated Continuous Current (amps)	Rated Short-Time Current (kiloamperes)			BIL (kilovolts)	Dimensional Range of Copper Conductor Sizes to be Accommodated by Terminals, Minimum to Maximum ‡	
Single Voltage Rated		Slant Voltage Rated			Sym	Asym**				Momentary	15 cycle	3 sec.		Inches	Millimeters
Col 1	Col 1a	Col 2	Col 2a	Col 3	Col 4	Col 5	Col 6	Col 7	Col 8	Col 9	Col 10	Col 11	Col 12	Col 13	
27.0	27.0	15.5/27.0	15.0/27.0	100	8.0	12.0	UHD	12	200	12.0	8.6	1.6	125	0.162–0.447	4.11–11.35
38.0	38.0	27.0/38.0	27.0/38.0	100	1.3	2.0	ND	15	200	8.0	5.0	1.6	150	0.162–0.447	4.11–11.35
38.0	38.0	27.0/38.0	27.0/38.0	100	5.0	8.0	HD	15	200	8.0	5.0	1.6	150	0.162–0.447	4.11–11.35
OPEN LINK TYPE															
8.3	7.8	—	—	50	1.2	1.2	—	1.33	—	—	—	—	75	0.128–0.251	3.25–6.38
15.5	15.0	—	—	50	1.2	1.2	—	1.33	—	—	—	—	95	0.128–0.251	3.25–6.38
23.0	18.0	—	—	50	0.75	0.75	—	1.33	—	—	—	—	125	0.128–0.251	3.25–6.38

*See Clause 3.2.1
†Interrupting Rating Nomenclature: ND-Normal duty; HD - heavy duty; EHD - extra heavy duty; UHD-Ultra Heavy Duty.
‡Terminal sizes are construction requirements and are not ratings.
**Asymmetrical values are provided for Information only

Copyright The Institute of Electrical and Electronics Engineers, Inc.
Provided by IHS under license with IEEE
No reproduction or networking permitted without license from IHS

Copyright © 2003 IEEE. All rights reserved.

3.3 Design test requirements

3.3.1 Dielectric tests

Distribution class open, enclosed, and open-link, fuses and cutouts shall be capable of withstanding the test voltages specified in table 2 when tested as specified in Clause 4. of ANSI/IEEE C37.41. The number of tests required is as follows:

a) For all fuses and fuse cutouts the tests shall be made on three fuses or fuse cutouts equipped with any size fuse link or refill unit.
b) For all disconnecting cutouts the tests shall be made on three disconnecting cutouts equipped with the disconnecting blade recommended for the device.

3.3.2 Interrupting tests (breaking capacity)

Distribution class fuses and fuse cutouts of the open and enclosed type and open-links in open-link cutouts when tested as specified in Clause 6 of ANSI/IEEE C37.41 shall interrupt all currents that cause melting of the fuse link. The device shall be capable of interrupting these currents when it is fused with any size fuse link specified in (a) and (b) below and of any type recommended by the manufacturer. It shall be capable of interrupting all currents, from minimum melting current up to and including the device's rated interrupting current, with any degree of asymmetry associated with the specified X/R.

a) For all fuses and fuse cutouts, except as noted in (b) fuse link sizes shall be from 1 ampere to the rated continuous current of the cutout.
b) For fuses and fuse cutouts rated 200 amperes, fuse link sizes shall be from above 100 amperes to the rated continuous current of the cutout.

3.3.3 Load-break tests for load-break fuses and cutouts

Load-Break Tests for distribution class fuses and cutouts of the open, enclosed, and open-link type designed for breaking load, when tested as specified in Clause 7 of ANSI/IEEE C37.41, shall interrupt all load currents, up to and including the rated continuous current of the fuse or cutouts, magnetizing currents of transformers, and line-charging currents normally associated with load currents within the rated continuous currents of the device. If the fuse link is involved in such load-breaking operations, the device shall interrupt all such currents with any size or type of fuse link recommended by the manufacturer of the device.

3.3.4 Radio-influence tests

Distribution class fuses and cutouts of the open, enclosed and open-link type, when new and clean and when tested at the point of manufacture as specified in Clause 9 of ANSI/IEEE C37.41, shall be capable of meeting the limits of radio-influence voltage at the test voltage specified in table 3.

3.3.5 Short-time current tests for disconnecting cutouts

Distribution class disconnecting cutouts equipped with a blade designed for the cutout or a blade recommended by the manufacturer shall carry the rated short-time currents as specified in columns 11, 12, and 13 of table 1A and columns 9, 10 and 11 of table 1B, when tested as specified in Clause 10 of ANSI/IEEE C37.41.

--`,,-`-`,,`,,`,`,,`---

Copyright The Institute of Electrical ar
Provided by IHS under license with IE
No reproduction or networking permitt

Copyright © 2003 IEEE. All rights reserved.

Table 2 —Minimum dielectric withstand test voltages

Rated Maximum Voltage (kV rms)* (a)				Withstand Voltages				
				Terminal-to-Ground			Terminal-to-Terminal	
Single Voltage Rated		Slant Voltage Rated		Power-Frequency Dry Test, 1 min (kV, rms)	Power-Frequency Wet Test, 10 s (kV, rms)	Impulse Test (BIL), 1.2 × 50 μs (kV, crest)	Power-Frequency Dry Test, 1 min (kV, rms)	Impulse Test (BIL), 1.2 × 50 μs (kV, crest)
Col 1	Col 1a	Col 2	Col 2a	Col 3	Col 4	Col 5	Col 6	Col 7
5.5	5.2	--	--	21	20	60	21	60
8.3	7.8	--	--	27	24	75	27	75
15.5	15.0	8.3/15.5	7.8/15.0	35	30	95	35	95
23.0	18.0†	--	--	42	36	125	42	125
27.0	27.0	15.5/27.0	15.0/27.0	42	36	125	42	125
38.0	38.0	27.0/38.0	27.0/38.0	70	60	150	70	150

*See Clause 3.2.1.
†Applicable to open-link cutout only.

Copyright The Institute of Electrical and Electronics Engineers, Inc.
Provided by IHS under license with IEEE
No reproduction or networking permitted without license from IHS

Copyright © 2003 IEEE. All rights reserved.

3.3.6 Temperature-rise tests

Distribution class fuses and cutouts of the open, enclosed and open link type and distribution class disconnecting cutouts, when carrying their rated continuous current and tested as specified in Clause 11 of ANSI/IEEE C37.41, shall not exceed the temperature rise and total temperature values specified in table 2 of ANSI/IEEE C37.40. The fuse device being tested shall be fused with the maximum rated refill unit or fuse link that is used in the device being tested. Disconnecting cutouts shall be equipped with a disconnecting blade designed for the cutout or a blade recommended by the manufacturer.

3.3.7 Expendable cap, static relief pressure tests

Expendable caps, when tested as specified in Clause 5 of ANSI/IEEE C37.41, shall be capable of withstanding an internal pressure without expelling the pressure-responsive section up to the minimum value of static relief pressure specified in 3.5.2. The section shall be expelled prior to the maximum static relief pressure specified in 3.5.2.

3.3.8 Manual operation, thermal cycle and bolt torque tests

Distribution class open and enclosed fuses and cutouts shall be capable of withstanding the manual operation, thermal cycle and bolt torque tests specified in Clause 13 of ANSI/IEEE C37.41

3.4 Conformance tests

Conformance tests, as defined in Clause 3.3 of ANSI/IEEE C37.40, shall consist of a power-frequency dry-withstand voltage test. The test shall be conducted as specified in Clause 4 of ANSI/IEEE C37.41.

3.5 Construction requirements

3.5.1 Color coding for enclosed cutouts

Color coding is not a requirement for compliance to this standard, however, when color coding is applied to distribution enclosed cutouts, the following shall apply:

a) The colors shall be as specified in columns 7 and 14 of table 1A.
b) The color coding shall be a minimum of 1/2 square inch (1.61 square cm) in area, located so as to be readily visible from the ground in front of the cutout.

Copyright The Institute of Electrical and Electronics Engineers, Inc.
Provided by IHS under license with IEEE
No reproduction or networking permitted without license from IHS

Copyright © 2003 IEEE . All rights reserved.

3.5.2 Expendable caps for 100- and 200-ampere open cutouts

Expendable caps for 100- and 200-ampere expendable cap cutouts shall meet the following requirements:

	Characteristic	100-Ampere	200-Ampere
a.	Maximum outside diameter of cap, inches	1-3/16	1-12
b.	Depth of bore, inches	9/16+0 -1/32	9/16+0 -/32
c.	Thread size	7/8″ - 14 UNF-2B	1-1/8″ - 12 UNF-2B
d.	Static relief pressure	1700 psi minimum 2300 psi maximum	800 psi minimum 1200 psi maximum
e.	Pressure-responsive section shall have a diameter that allows free passage of a fuse link button head having this diameter in inches	3/4	1
f.	Depth of thread; bore shall be full threaded to within 1/8 inch of bottom.		
g.	Expendable caps shall be identified by “E” at least 3/16 inch in height, or by the words “expendable cap” or by abbreviation thereof.		

3.5.3 Fuse holder dimensions

The dimensions of a fuse holder for distribution open or enclosed fuses or fuse cutouts shall be such that a universal fuse link of the corresponding rating, having the dimensions specified in 4.4, will be accommodated.

Copyright The Institute of Electrical and Electronics Engineers, Inc.
Provided by IHS under license with IEEE
No reproduction or networking permitted without license from IHS

Copyright © 2003 IEEE . All rights reserved.

Table 3 —Radio-influence voltage

Rated Maximum Voltage Maximum (kV rms)*				Minimum Test Voltage (Volts, rms)	Maximum Allowable Radio-Influence Voltage (μV at 1 MHz)
Single Voltage Rated		Slant Voltage Rated			
Col 1	Col 1a	Col 2	Col 2a	Col 3	Col 4
5.5	5.2	—	—	5770	250
8.3	7.8	—	—	8320	250
15.5	15.0	8.3/15.5	7.8/15.0	9410	250
23.0	18.0†	—	—	15660	250
27.0	27.0	15.5/27.0	15.0/27.0	15660	250
38.0	38.0	27.0/38.0	27.0/38.0	22000	250

*See Clause 3.2.1.
†Applicable to open-link cutout only.

3.5.4 Mounting bracket

The arrangements and dimensions of brackets for crossarm, pole, or wall mounting shall be as follows:

a) Type-A brackets shall be in accordance with figure 1 (see 3.5.4.7 for application).
b) Type-B brackets shall be in accordance with figure 2 (see 3.5.4.7 for application).

The brackets furnished under these specifications shall conform in all respects to the requirements hereinafter stated.

--`,,`-`-`,,`,,`,`,,`---

Copyright The Institute of Electrical and Electronics Engineers, Inc.
Provided by IHS under license with IEEE
No reproduction or networking permitted without license from IHS

Copyright © 2003 IEEE . All rights reserved.

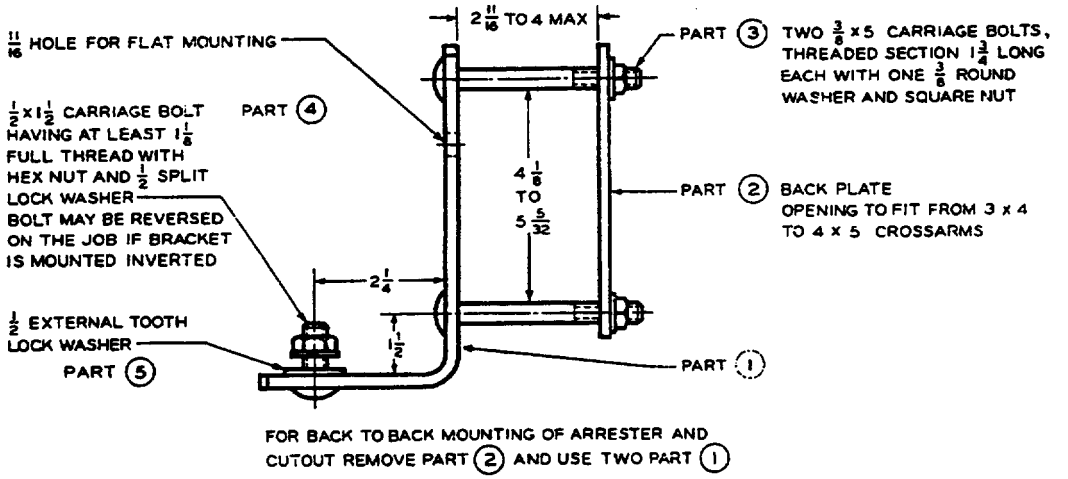

TYPE A BRACKET ASSEMBLY

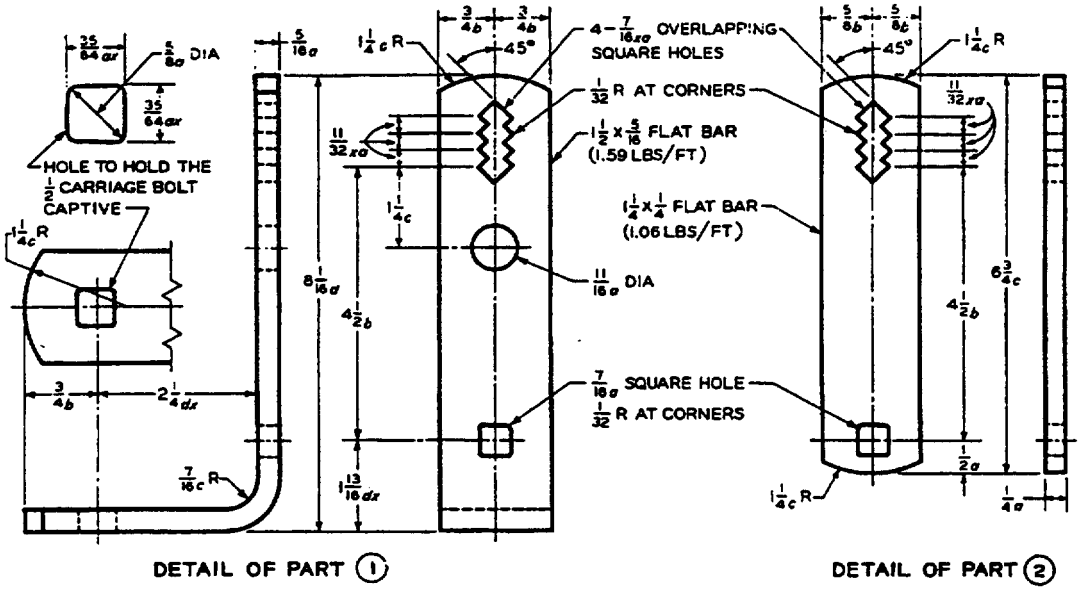

DETAIL OF PART (1) DETAIL OF PART (2)

NOTES:
(1) Dimensions do not cover galvanizing, but parts should fit together after galvanizing.
(2) All dimensions are in inches.
(3) *Allowable Variations:* The letters appearing above stand for the following tolerances: A single letter indicates a plus or minus tolerance (for example, *a* indicates a tolerance of ±1/64 inch); when two letters are used, the first is a plus tolerance and the second a minus (for example, *ax* indicates a tolerance of +1/64 inch, –0 inch).
a = 1/64 inch
b = 1/32 inch
c = 1/16 inch
d = 1/8 inch
x = 0

Figure 1 —Type-A mounting bracket

Copyright The Institute of Electrical and Electronics Engineers, Inc.
Provided by IHS under license with IEEE
No reproduction or networking permitted without license from IHS

Copyright © 2003 IEEE . All rights reserved.

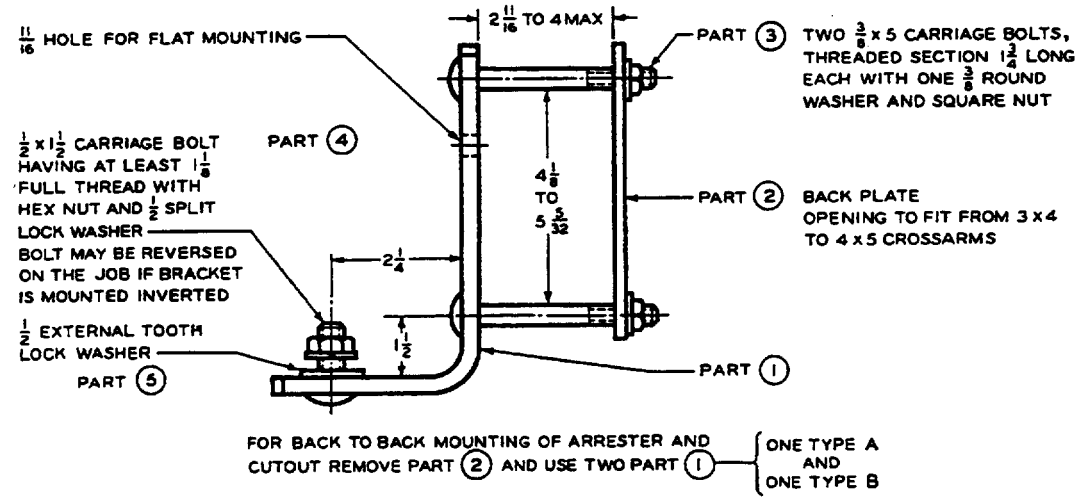

TYPE B BRACKET ASSEMBLY

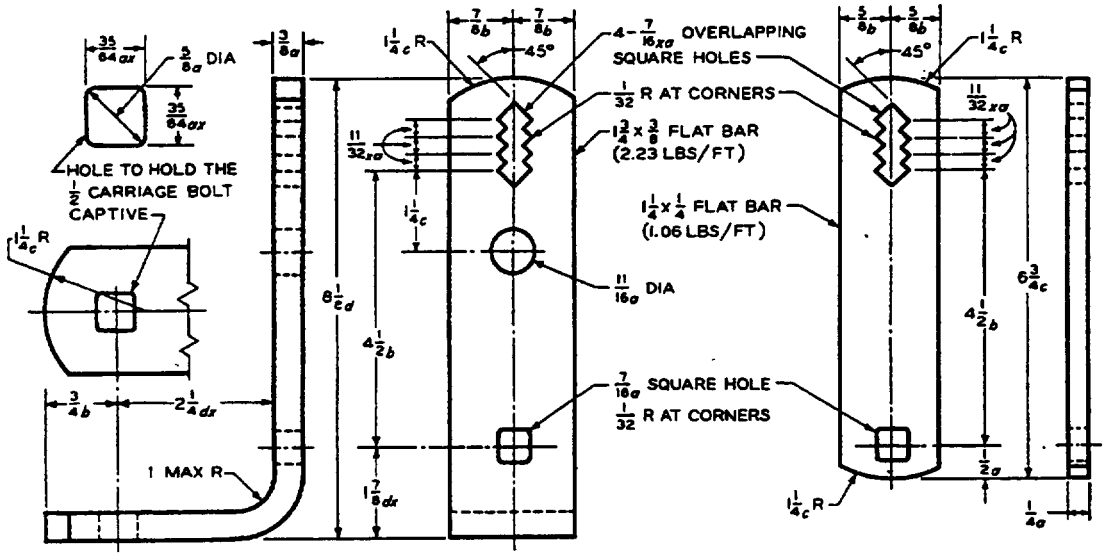

DETAIL OF PART 1 DETAIL OF PART 2

NOTES:

(1) Dimensions do not cover galvanizing, but parts should fit together after galvanizing.

(2) All dimensions are in inches.

(3) *Allowable Variations:* The letters appearing above stand for the following tolerances: A single letter indicates a plus or minus tolerance ((for example, *a* indicates a tolerance of ±1/64 inch); when two letters are used, the first is a plus tolerance and the second a minus (for example, *ax* indicates a tolerance of +1/64 inch, −0 inch).

a = 1/64 inch
b = 1/32 inch
c = 1/16 inch
d = 1/8 inch
x = 0

Figure 2 —Type-B mounting bracket

Copyright The Institute of Electrical and Electronics Engineers, Inc.
Provided by IHS under license with IEEE
No reproduction or networking permitted without license from IHS

Copyright © 2003 IEEE . All rights reserved.

3.5.4.1 Material

a) Parts 1 and 2—Parts 1 and 2 in figure 1 and 2 shall be made from steel bar with physical characteristics at least equal to those of grade 1020, specified in ASTM A575.
The strength of the part-1 member of the mounting bracket shall be determined by clamping the long leg of the member to a rigid support by 3/8-inch carriage bolts with the short leg at the top. A downward force shall be applied along the axis of the 1/2 × 1-1/2 inch carriage bolt parallel to the longer leg and in the direction of the longer leg of the member under test. A load of 100 pounds shall be applied and then removed to take up any slack in the mounting arrangement before the measurement of position is taken. The permanent set measured at the axis of the 1/2 × 1-1/2 inch carriage bolt shall not exceed 1/16 inch When the following load is applied and removed: type-A bracket, 525 pounds; type-B bracket, 940 pounds.

b) Bolts—Bolts shall be made from open-hearth carbon steel of a quality to meet the requirements herein listed. If hot-headed, bolts shall be made from hot-rolled carbon steel bars in accordance with grades 1020 to 1025, inclusive, of ASTM A575. Bolts, if cold-headed, shall be made from carbon steel cold-heading wire, AISI (American Iron and Steel Institute) grade 1010 to 1020, inclusive.

c) Nuts—Nuts shall be made from hot-rolled, open-hearth carbon steel bars, AISI grades 1108 to 1120, inclusive, of a quality suitable to meet the requirements herein listed.

d) Strength of bolts and nuts—The heads, threads, and nuts shall develop the body strength of the bolts. The strength of the 3/8-inch bolts shall in no case be less than 4200 pounds, and the strength of the 1/2-inch bolts no less than 7700 pounds. The unthreaded portion shall be capable of being bent cold at any point through an angle of 180 degree about a diameter equal to the diameter of the bolt without cracking the steel on the outside of the bent portion.

e) Round washers—Round washers shall be made of a commercial grade of open-hearth steel or wrought iron.

f) External-tooth lockwashers—External-tooth lockwashers shall be made of steel lockwasher stock.

g) Split lockwashers—Split lockwashers shall be made of steel or silicon bronze.

3.5.4.2 Dimensions

a) Parts 1 and 2—Parts 1 and 2 of the type-A bracket shall be in accordance with figure 1. Parts 1 and 2 for the type-B bracket shall be in accordance with figure 2. Dimensions do not cover galvanizing, but parts shall fit together after galvanizing.

b) Bolts—The bolt length shall be measured from the underside of the head to the end of the bolt.
For part 3 on figure 1 and 2, the bolts shall be 3/8 × 5-inch carriage bolts. The minimum diameter of the unthreaded portion before galvanizing shall be 0.322 inch. The head shall be in accordance with table 1 of ANSI/ASME B18.5. The threaded portion shall be 1-3/4 inch long and shall be machine rolled or cut. Threads, before galvanizing, shall be in accordance with class 2A, external, and class 2B, internal, threads of ANSI/ASME B1.1.
For part 4 on figure 1 and 2, the carriage bolt to be held captive in part 1 shall be 1/2 × 1-1/2 inch and have at least a 1-1/8 inch full thread with 13 threads per inch. Other specifications for threads and the head shall be the same as in the preceding paragraph.

c) Nuts—Nuts for the two 3/8 × 5 inch carriage bolts shall be square, and for the 1/2 × 1-1/2 inch captive bolts, hexagon. They shall be in accordance with the tables for regular square nuts and regular hexagon and hexagon-jam nuts of ANSI/ASME B18.2.2.
Nuts shall be tapped oversize to a proper fit for the bolt so that after galvanizing the nut can be run the entire length of the thread with the fingers, without undue forcing. There shall be no unnecessary looseness between the nut and bolt.

d) Round washers—Round washers for 3/8 inch carriage bolts shall have the following minimum dimension: 1-inch outside diameters, 13/32 inch hole diameter, 1/16 inch thickness.

e) External-tooth lockwashers—External-tooth lockwashers, part 5, shall have the following dimensions: commercial thickness, 16 gage (minimum 0.055 inch); nominal inside diameter, 17/32 inch; nominal outside diameter, 1-3/8 inch.

--`,-`-`,,`,,`,`,,`---

Copyright The Institute of Electrical and Electronics Engineers, Inc.
Provided by IHS under license with IEEE
No reproduction or networking permitted without license from IHS

Copyright © 2003 IEEE . All rights reserved.

3.5.4.3 Galvanizing

Parts 1 and 2—bolts, nuts, and washers of parts 3 and 4; and the external-tooth lockwasher of part 5 shall be hot galvanized in accordance with ASTM A153.

3.5.4.4 Finish

a) Parts 1 and 2—Parts 1 and 2 shall be truly formed and not cracked or otherwise defective.
b) Bolts and Nuts—Bolts of parts 3 and 4 shall be free from badly formed, mitred, cracked, or otherwise defective heads. The threaded end shall preferably be chamfered or rounded. Nuts shall be symmetrically formed with the holes centrally located and the bearing surface at right angles (tolerance, 3°) to the axis of the hole.

3.5.4.5 Packing and shipping

When a bracket is furnished as part of a fuse or cutout, the bracket, complete with bolts, nuts, and washers, shall be suitably packed in the same carton with the fuse or the cutout so as to prevent damage in transportation and handling.

3.5.4.6 Tests for mounting brackets

a) Design tests—The manufacturer shall make such design tests on mounting brackets as will ensure conformity with the specifications for strength and ability to meet the requirement relative to permanent set of part 1.
b) Routine tests—The manufacturer shall make such routine tests on mounting brackets as deemed necessary to ensure uniformity of the product.
c) Conformance tests—Conformance tests on mounting brackets shall be the manufacturer's routine tests on mounting brackets unless otherwise specified and arranged for between the manufacturer and the purchaser. When conformance tests are to be made in the presence of a purchaser's representative, they shall be arranged for between the manufacturer and the purchaser.

3.5.4.7 Application of mounting brackets

a) Type-A brackets—Type-A brackets shall be used with 5.2–5.5 kV and 7.8–8.3 kV open and enclosed distribution class fuses and cutouts and 7.8–8.3 kV, 15.0–15.5 kV, and 18.0–23.0 kV open-link distribution class fuses and cutouts for crossarm and pole applications.
b) Type-B brackets—Type-B brackets shall be used with 15.0–15.5 kV, 27.0 kV, and 38.0 kV open distribution class fuses and cutouts for crossarm and pole applications.

3.5.5 Mounting strap for fuses and cutouts

The mounting strap for fuses and cutouts shall be of dimensions suitable to provide for mounting the cutout on the mounting bracket described in 3.5.4. The strap shall be configured so that the centerline through the top and bottom of the insulator will be as follows:

a) For open and enclosed fuses and cutouts, at an angle of 15° to 20° from the vertical.
b) For open-link cutouts, vertical or at an angle of 15° to 20°, or both.

3.5.6 Terminal dimensions

The dimensions of the terminals for distribution class fuses and cutouts shall be such as to accommodate the range of conductor sizes specified in table 4.

Copyright The Institute of Electrical and Electronics Engineers, Inc.
Provided by IHS under license with IEEE
No reproduction or networking permitted without license from IHS

Copyright © 2003 IEEE . All rights reserved.

3.5.7 Switch stick (switch hook) for use with distribution class fuses and cutouts

Switch sticks for use with distribution class fuses and cutouts shall be constructed to meet the dimensions of the head or hook shown in figure 3. The stick shall be of the length specified in figure 3 Note (1). The material used in the head or hook shall provide a minimum yield strength of 20,000 psi.

3.6 Nameplate marking for distribution class open, enclosed, and open-link fuses and cutouts

The following minimum information shall be placed on all distribution class open, enclosed, and open-link fuses and cutouts:

a) Manufacturer's name or trademark (or monogram)
b) Manufacturer's type or identification number
c) Rated continuous current
d) Rated maximum voltage
e) Rated interrupting current
    1) For enclosed and open-type fuses and cutouts, all applicable rated interrupting currents shall appear on the fuse holder or refill unit.
    2) For open-link fuses and cutouts, the rated interrupting current should be referenced to the fuse link, not the fuse or cutout.
f) For a disconnecting cutout, the blade or any other part of the cutout, but not necessarily both, shall be marked with the continuous current rating of the blade.

--`,,`-`-`,,`,,`,`,,`---

Copyright The Institute of Electrical and Electronics Engineers, Inc.
Provided by IHS under license with IEEE
No reproduction or networking permitted without license from IHS

Copyright © 2003 IEEE . All rights reserved.

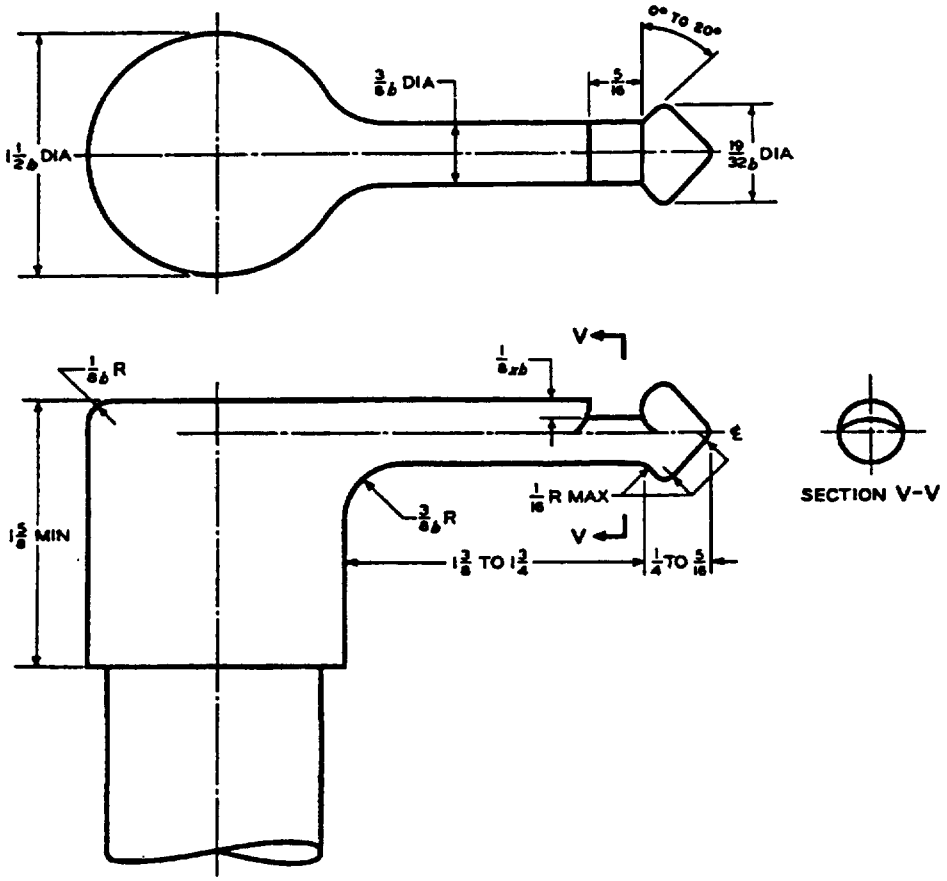

NOTES:

(1) The length of stick is 4, 6, 8, 10, and 12 feet.

(2) All dimensions are in inches.

(3) *Allowable Variations:* The letters appearing above stand for the following tolerances. A single letter indicates a plus or minus tolerance (for example, *b* indicates a tolerance of ±1/32 inch); when two letters are used, the first is a plus tolerance and the second a minus (for example, *xb* indicates a tolerance of +0 inch, −1/32 inch).

a = 1/64 inch
b = 1/32 inch
c = 1/16 inch
d = 1/8 inch
x = 0

Figure 3 —Switch sticks for use with distribution cutouts

Copyright The Institute of Electrical and Electronics Engineers, Inc.
Provided by IHS under license with IEEE
No reproduction or networking permitted without license from IHS

Copyright © 2003 IEEE . All rights reserved.

Table 4 —Range of conductor sizes

Rated Continuous Current of Fuses and Cutouts (amperes)		Range of Copper Conductor Sizes to be Accommodated—Minimum to Maximum	
Fuse or Fuse Cutout	**Disconnecting Cutout**	**Inches**	**Millimeters**
Enclosed fuses and cutouts			
50	100	0.128–0.316	3.25–8.03
100	200	0.162–0.447	4.11–11.35
200	300	0.289–0.575	7.34–14.61
Open fuses and cutouts			
100	200	0.162–0.447	4.11–11.35
200	300	0.257–0.575	6.53–14.61
Open-link fuses and cutouts			
50	—	0.128–0.251	3.25–6.38

3.7 Application requirements

See ANSI/IEEE C37.48.

4. Fuse links for distribution class open, enclosed, and open-link fuses and cutouts

4.1 General rating information

The ratings of fuse links shall be determined with tests performed using the usual service conditions defined in Clause 2 of ANSI/IEEE C37.40, except where other conditions are specified, and shall include.

a) Rated continuous current, determined by the temperature rise design tests specified in 4.7.1 and the time-current-characteristic requirements specified in 4.3.
b) Rated maximum voltage, determined by interrupting tests performed to determine the highest voltage rating of fuse or fuse cutout where the fuse link is capable of properly interrupting or aiding in the interruption. Interrupting tests for fuses and fuse cutouts that use replaceable fuse links are specified in 3.3.2. Mechanical interchangeability requirements for these voltage ratings are specified in 4.4 for open and enclosed fuses and fuse cutouts and in 4.5 for open-link fuses and fuse cutouts.
c) Rated interrupting current (breaking capacity) only for open-link fuse links, determined by design tests in an open-link fuse or fuse cutout of the same manufacturer as the fuse links or as recommended by the manufacturer of the fuse links. The tests shall be carried out as specified in Clause 6 of ANSI/IEEE C37.41. The rated interrupting currents are specified in table 1B.

4.2 Preferred ratings and performance requirements

4.2.1 Rated Continuous Currents

The rated continuous currents of fuse links for use in open, enclosed, and open-link fuses and cutouts shall be:

a) Preferred rated currents of 6, 10, 15, 25, 40, 65, 100, 140, and 200 amperes.

Copyright The Institute of Electrical and Electronics Engineers, Inc.
Provided by IHS under license with IEEE
No reproduction or networking permitted without license from IHS

Copyright © 2003 IEEE . All rights reserved.

b) Intermediate rated currents of 8, 12, 20, 30, 50, and 80 amperes.
c) Rated currents below 6 amperes-1, 2, and 3 amperes.

4.2.2 Rated voltage

The rated maximum voltage of fuse links for use in open, enclosed, and open-link fuses and cutouts shall be as specified in table 5.

Table 5 —Rated maximum voltage

Distribution Fuse or Cutout for Which Fuse Link is Designed	Rated Maximum Voltage (kV, rms)
Enclosed and open	15.0–15.5
	27.0
	38.0
Open-link	7.8–8.3
	15.0–15.5
	18.0–23.0

4.2.3 Performance requirements

The performance requirements of distribution class fuse links for use in distribution class open, enclosed, and open-link fuses and cutouts shall include:

a) Minimum melting(pre-arcing)-time-current characteristics, specified in 4.3 and determined as specified in 4.7.2.
b) Total clearing-time-current characteristics, determined as specified in 4.7.2.

NOTE — These time-current characteristics shall be presented as curves as specified in Clause 12 of ANSI/IEEE C37.41.

4.3 Time-current-characteristic requirements for universal fuse links used in distribution class open, enclosed, and open-link fuses and cutouts

4.3.1 Melting (pre-arcing)-time-current characteristics for K and T type fuse links

The melting-time-current characteristics for K and T type fuse links shall meet the minimum and maximum current values required to melt the fuse link at the three time points designated in tables 6 and 7 and as follows:

a) 300 seconds for fuse links rated at 100 amperes and below and 600 seconds for fuse links rated above 100 amperes.
b) 10 seconds
c) 0.1 seconds

4.3.2 Identification for K or T types of fuse links

Fuse links shall be identified as type K or type T as follows:

a) Type K for fuse links (see table 6) having fast speed ratios of the melting-time-current characteristics varying from 6 for the 6-ampere rating to 8.1 for the 200-ampere rating.

Copyright The Institute of Electrical and Electronics Engineers, Inc.
Provided by IHS under license with IEEE
No reproduction or networking permitted without license from IHS

Copyright © 2003 IEEE . All rights reserved.

b) Type T for fuse links (see table 7) having slow speed ratios of the melting-time-current characteristics varying from 10 for the 6-ampere rating to 13 for the 200-ampere rating.

NOTE — The terms “fast” and “slow” are used only to indicate the relative speeds for K and T fuse links.

4.3.3 Melting time-current-characteristics for fuse links other than K or T types

Other types of fuse links are available that meet and comply with the requirements of this standard except for the melting time-current-characteristics specified for the K and T fuse links in tables 6 and 7, the rated continuous currents specified in 4.2.1 or both. The ratings and/or time-current-characteristics for fuse links other than the K and T types often provide desirable properties for specific applications.

4.3.4 Accuracy

The minimum melting-current characteristics for any K or T fuse link shall be not less than the minimum values specified in tables 6 and 7. The minimum melting-current characteristics plus manufacturing tolerances for any K or T fuse link shall not be greater than the maximum values specified in tables 6 and 7. For all other types of fuse links for any given melting time the maximum melting current should not exceed the minimum melting current by more than 20 percent.

4.4 Mechanical interchangeability requirements for universal fuse links for open and enclosed type fuses and cutouts

4.4.1 Diameter of button head

The diameter of the button head on fuse links shall be as follows:

Rated Continuous Current of Fuse Link (amperes)	Diameter of Button Head	
	(inches)	(millimeters)
1–50	1/2 and 3/4*	12.7 and 19.1
51–100†	3/4	19.1
101–200	1	25.4

*Either 1/2 inch or 3/4 inch (12.7 mm or 19.1 mm) shall be readily obtainable.

†Some special types of fuse links, such as coordinating types, have ratings that are higher than the 100 ampere value listed above that conform to the dimensional values for the 51 to 100 ampere fuse links since they are designed to be used in 100 ampere rated fuses or cutouts. When these links are used in 100 ampere rated fuses or cutouts they may not increase the 100 ampere rated continuous current of these fuses or cutouts.

Copyright The Institute of Electrical and Electronics Engineers, Inc.
Provided by IHS under license with IEEE
No reproduction or networking permitted without license from IHS

Copyright © 2003 IEEE . All rights reserved.

Table 6 —melting currents for type-K (fast) fuse links(a)

Rated Continuous Current	300- or 600-Second Melting Current*		10-Second Melting Current		0.1-Second Melting Current		Speed Ratio
	Minimum	Maximum	Minimum	Maximum	Minimum	Maximum	
Preferred ratings							
6†	12.0	14.4	13.5	20.5	72	86	6.0
10	19.5	23.4	22.5	34	128	154	6.6
15†	31.0	37.2	37.0	55	215	258	6.9
25	50	60	60	90	350	420	7.0
40	80	96	96	146	565	680	7.1
65†	128	153	159	237	918	1100	7.2
100	200	240	258	388	1520	1820	7.6
140†	310	372	430	650	2470	2970	8.0
200	480	576	760	1150	3880	4650	8.1
Intermediate ratings							
8	15	18	18	27	97	116	6.5
12†	25	30	29.5	44	166	199	6.6
20	39	47	48.0	71	273	328	7.0
30†	63	76	77.5	115	447	546	7.1
50	101	121	126	188	719	862	7.1
80	160	192	205	307	1180	1420	7.4
Ratings below 6 amperes							
1	2	2.4	‡	10	‡	58	—
2	4	4.8	‡	10	‡	58	—
3	6	7.2	‡	10	‡	58	—

(a)-All values are in amperes.

*300 seconds for fuse links rated 100 amperes and less; 600 seconds for fuse links rated 140 and 200 amperes.

†IEC282-2 has assigned a rated continuous current for these type K fuse links as 6.3, 16, 63, 160, 12.5 and 31.5 respectfully. The melting currents for these ratings are the same as those listed in this table.

‡No minimum value is indicated, since the requirement is that 1-, 2-, and 3-ampere ratings shall coordinate with the 6 ampere rating but not necessarily with each other.

Copyright The Institute of Electrical and Electronics Engineers, Inc.
Provided by IHS under license with IEEE
No reproduction or networking permitted without license from IHS

Copyright © 2003 IEEE . All rights reserved.

Table 7 —Melting currents for type-T (slow) fuse links (a)

Rated Continuous Current	300- or 600-Second Melting Current*		10-Second Melting Current		0.1-Second Melting Current		Speed Ratio
	Minimum	Maximum	Minimum	Maximum	Minimum	Maximum	
Preferred ratings							
6†	12.0	14.4	15.3	23.0	120	144	10.0
10	19.5	23.4	26.5	40	224	269	11.5
15‡	31.0	37.2	44.5	67	388	466	12.5
25	50	60	73.5	109	635	762	12.7
40	80	96	120	178	1040	1240	13.0
65‡	128	153	195	291	1650	1975	12.9
100	200	240	319	475	2620	3150	13.1
140‡	310	372	520	775	4000	4800	12.9
200	480	576	850	1275	6250	7470	13.0
Intermediate ratings							
8	15	18	20.5	31	166	199	11.1
12‡	25	30	34.5	52	296	355	11.8
20	39	47	57.0	85	496	595	12.7
30‡	63	76	93.0	138	812	975	12.9
50	101	121	152	226	1310	1570	13.0
80	160	192	248	370	2080	2500	13.0
Ratings below 6 amperes							
1	2	2.4	‡	11	‡	100	—
2	4	4.8	‡	11	‡	100	—
3	6	7.2	‡	11	‡	100	—
(a)-All values are in amperes.							

*300 seconds for fuse links rated 100 amperes and less; 600 seconds for fuse links rated 140 and 200 amperes.
†IEC282-2 has assigned a rated continuous current for these type T fuse links as 6.3, 16, 63, 160, 12.5 and 31.5 respectfully. The melting currents for these ratings are the same as those listed in this table.
‡No minimum value is indicated, since the requirement is that 1-, 2-, and 3-ampere ratings shall coordinate with the 6-ampere rating but not necessarily with each other.

4.4.2 Size and shape

The size and shape of fuse links shall be such that they will freely enter a fuse holder having the following inside diameters:

Copyright The Institute of Electrical and Electronics Engineers, Inc.
Provided by IHS under license with IEEE
No reproduction or networking permitted without license from IHS

Copyright © 2003 IEEE . All rights reserved.

Rated Continuous Current of Fuse Link (amperes)	Inside Diameter of Fuse Holder	
	(inches)	(millimeters)
1–50	5/16	7.9
51–100 (a)	7/16	11.1
101–200	11/16	17.5

NOTE — Some special types of fuse links, such as coordinating types, have ratings that are higher than the 100 ampere value listed above that conform to the dimensional values for the 51 to 100 ampere fuse links since they are designed to be used in 100 ampere rated fuses or cutouts. When these links are used in 100 ampere rated fuses or cutouts they may not increase the 100 ampere rated continuous current of these fuses or cutouts.

4.4.3 Minimum overall length

The minimum overall length of fuse links rated from 1 to 200 amperes shall be 20 inches (51 cm) for use in cutouts rated 15.5 kV and less. The length of fuse links for use in open cutouts rated 27.0 kV and 38.0 kV has not been standardized.

4.4.4 Bending requirements

Fuse links should bend readily when installed and during operation so as not to interfere with the proper functioning of cutouts.

4.4.5 Maximum thickness of bending section

To ensure proper clamping of the fuse links, the maximum thickness of the bending section shall not exceed the following:

Rated Continuous Current of Fuse Link (amperes)	Diameter of Fuse Link Cable (a)	
	(inches)	(millimeters)
1–50	5/32	4.0
51–100 (b)	1/4	6.4
101–200	3/8	9.5

(a)-Cable that can be flattened easily to these dimensions will comply with this standard.

(b)-Some special types of fuse links, such as coordinating types, have ratings that are higher than the 100 ampere value listed above that conform to the dimensional values for the 51 to 100 ampere fuse links since they are designed to be used in 100 ampere rated fuses or cutouts. When these links are used in 100 ampere rated fuses or cutouts they may not increase the 100 ampere rated continuous current of these fuses or cutouts.

4.4.6 Tensile withstand strength

All types of fuse links shall be capable of withstanding a tension pull of 10 pounds when tested cold (25 °C) without mechanical or electrical damage to any part of the fuse link.

Copyright The Institute of Electrical and Electronics Engineers, Inc.
Provided by IHS under license with IEEE
No reproduction or networking permitted without license from IHS

Copyright © 2003 IEEE . All rights reserved.

4.5 Mechanical interchangeability requirements for universal open-link fuse links

4.5.1 Construction

The fuse link shall consist of a current-responsive element enclosed in a weather-resistant enclosure having current interrupting properties. The fuse link shall be provided with flexible conductors at each end, each conductor terminating in contact buttons that are at least 1/2 inch (12.7 mm) in diameter and adapted with rings for installing the fuse link and removing it from the fuse support.

4.5.2 Length

The length of the fuse link between contact buttons shall be as specified in table 8.

Table 8 —Length of fuse link between contact buttons

Rated Maximum Voltage of Open Link Fuses or Fuse Cutouts (kV,rms)		Length Between Contact Buttons			
		Minimum		Maximum	
		Inches	Centimeters	Inches	Centimeters
Col 1	Col 1a	Col 2	Col 3	Col 4	Col 5
8.3	7.8	7	17.8	8-1/2	21.6
15.5	15.0	7	17.8	8-1/2	21.6
23.0	18.0	13	33.0	14	35.6

4.5.3 Maximum thickness of flexible conductor

The maximum thickness of the flexible conductor shall be as follows:

Rated Continuous Current of Fuse Link (amperes)	Maximum Thickness	
	(inches)	(millimeters)
1–50	0.172	4.4
51–100	0.266	6.8

4.6 Tensile withstand strength

All types of fuse links shall be capable of withstanding a tension pull of 10 pounds when tested cold (20 °C to 25°C) without mechanical or electrical damage to any part of the fuse link.

4.7 Design test requirements

4.7.1 Temperature-rise tests

Distribution fuse links, after carrying their rated continuous current in the cutout of the lowest current rating for which they are designed, when tested as specified in Clause 11 of ANSI/IEEE C37.41, shall not cause the temperature rise of the cutout to exceed the limits specified in 3.3.6.

Copyright The Institute of Electrical and Electronics Engineers, Inc.
Provided by IHS under license with IEEE
No reproduction or networking permitted without license from IHS

Copyright © 2003 IEEE . All rights reserved.

4.7.2 Time-current tests

The minimum melting and total clearing time-current curves for distribution fuse links shall be determined by the tests specified in Clause 12 of ANSI/IEEE C37.41. A sufficient number of tests shall be made to ensure that all fuse links meet the accuracy specified in 4.3.4.

4.8 Nameplate marking

4.8.1 Fuse links

The following minimum information shall be marked on each fuse link for use in open, enclosed, or open-link fuses and cutouts:

a) Manufacturer's name or trademark (or monogram)
b) Manufacturer's type or identification letter for the fuse link (K or T where applicable). This identification shall follow the rated continuous current marking.
c) Rated continuous current

4.8.2 Shipping container

The following minimum information shall be placed on the shipping container:.

a) Manufacturer's name or trademark (or monogram)
b) Manufacturer's type or identification letter for the fuse link (K or T where applicable). This identification shall follow the rated continuous current marking.
c) Rated continuous current
d) Interrupting rating, on open-link fuse shipping containers only.

4.9 Application requirements

See ANSI/IEEE C37.48.

Copyright The Institute of Electrical and Electronics Engineers, Inc.
Provided by IHS under license with IEEE
No reproduction or networking permitted without license from IHS

Copyright © 2003 IEEE . All rights reserved.