IEEE Std C37.41-2000
(Revision of
IEEE Std C37.41-1994)

IEEE Standard Design Tests for High-Voltage Fuses, Distribution Enclosed Single-Pole Air Switches, Fuse Disconnecting Switches, and Accessories

Sponsor

Switchgear Committee
of the
IEEE Power Engineering Society

Approved 30 January 2000

IEEE-SA Standards Board

Abstract: Required procedures for performing design tests for high-voltage distribution class and power-class fuses, as well as for fuse-disconnecting switches and enclosed single-pole air switches, are specified. These design tests, as appropriate to a particular device, include the following test types: dielectric, interrupting, load-break, making-current, radio-influence, short-time current, temperature-rise, time-current, manual operation, thermal-cycle, bolt torque, and liquid-tightness.

Keywords: distribution enclosed single-pole air switches, fuse accessories, fuse design tests, fuse disconnecting switches, high-voltage fuses

---

The Institute of Electrical and Electronics Engineers, Inc.
3 Park Avenue, New York, NY 10016-5997, USA

Copyright © 2000 by the Institute of Electrical and Electronics Engineers, Inc.
All rights reserved. Published 29 November 2000. Printed in the United States of America.

Print: ISBN 0-7381-1974-1 SH94829
PDF: ISBN 0-7381-1975-X SS94829

No part of this publication may be reproduced in any form, in an electronic retrieval system or otherwise, without the prior written permission of the publisher.

--`,,`,,`-`-`,,`,,`,`,,`---

Copyright The Institute of Electrical and Electronics Engineers, Inc.
Provided by IHS under license with IEEE
No reproduction or networking permitted without license from IHS Not for Resale

IEEE Standards documents are developed within the IEEE Societies and the Standards Coordinating Committees of the IEEE Standards Association (IEEE-SA) Standards Board. Members of the committees serve voluntarily and without compensation. They are not necessarily members of the Institute. The standards developed within IEEE represent a consensus of the broad expertise on the subject within the Institute as well as those activities outside of IEEE that have expressed an interest in participating in the development of the standard.

Use of an IEEE Standard is wholly voluntary. The existence of an IEEE Standard does not imply that there are no other ways to produce, test, measure, purchase, market, or provide other goods and services related to the scope of the IEEE Standard. Furthermore, the viewpoint expressed at the time a standard is approved and issued is subject to change brought about through developments in the state of the art and comments received from users of the standard. Every IEEE Standard is subjected to review at least every five years for revision or reaffirmation. When a document is more than five years old and has not been reaffirmed, it is reasonable to conclude that its contents, although still of some value, do not wholly reflect the present state of the art. Users are cautioned to check to determine that they have the latest edition of any IEEE Standard.

Comments for revision of IEEE Standards are welcome from any interested party, regardless of membership affiliation with IEEE. Suggestions for changes in documents should be in the form of a proposed change of text, together with appropriate supporting comments.

Interpretations: Occasionally questions may arise regarding the meaning of portions of standards as they relate to specific applications. When the need for interpretations is brought to the attention of IEEE, the Institute will initiate action to prepare appropriate responses. Since IEEE Standards represent a consensus of all concerned interests, it is important to ensure that any interpretation has also received the concurrence of a balance of interests. For this reason, IEEE and the members of its societies and Standards Coordinating Committees are not able to provide an instant response to interpretation requests except in those cases where the matter has previously received formal consideration.

Comments on standards and requests for interpretations should be addressed to:

Secretary, IEEE-SA Standards Board
445 Hoes Lane
P.O. Box 1331
Piscataway, NJ 08855-1331
USA

Note: Attention is called to the possibility that implementation of this standard may require use of subject matter covered by patent rights. By publication of this standard, no position is taken with respect to the existence or validity of any patent rights in connection therewith. The IEEE shall not be responsible for identifying patents for which a license may be required by an IEEE standard or for conducting inquiries into the legal validity or scope of those patents that are brought to its attention.

IEEE is the sole entity that may authorize the use of certification marks, trademarks, or other designations to indicate compliance with the materials set forth herein.

Authorization to photocopy portions of any individual standard for internal or personal use is granted by the Institute of Electrical and Electronics Engineers, Inc., provided that the appropriate fee is paid to Copyright Clearance Center. To arrange for payment of licensing fee, please contact Copyright Clearance Center, Customer Service, 222 Rosewood Drive, Danvers, MA 01923 USA; (978) 750-8400. Permission to photocopy portions of any individual standard for educational classroom use can also be obtained through the Copyright Clearance Center.

Copyright The Institute of Electrical and Electronics Engineers, Inc.
Provided by IHS under license with IEEE
No reproduction or networking permitted without license from IHS
Not for Resale

Introduction

(This introduction is not part of IEEE Std C37.41-2000, IEEE Standard Design Tests for High-Voltage Fuses, Distribution Enclosed Single-Pole Air Switches, Fuse Disconnecting Switches, and Accessories.)

IEEE Std C37.41-2000 is a revision of IEEE Std C37.41-1994, in order to bring it up to date and into agreement with current requirements for high-voltage fuses and switches. Previously approved supplements have been incorporated. The standard was prepared by the IEEE Subcommittee on High-Voltage Fuses, with cooperation from the National Electrical Manufacturers Association (NEMA).

This standard is one of a series of complementary standards covering various types of high-voltage fuses and switches, so arranged that two of the standards apply to all devices, while each of the other standards provide additional specifications for a particular device. For each device, IEEE Std C37.40-1993, IEEE Std C37.41-2000, plus the standard covering that device, constitute a complete set of standards for each device. In addition, IEEE Std C37.48-1997 is an application, operation, and maintenance guide for all the devices.

The following standards comprise this series:

ANSI C37.42-1996, American National Standard for Switchgear—Distribution Cutouts and Fuse Links—Specifications.

ANSI C37.44-1981 (Reaff 1987), American National Standard Specifications for Distribution Oil Cutouts and Fuse Links.

ANSI C37.45-1981 (Reaff 1987), American National Standard Specifications for Distribution Enclosed Single-Pole Air Switches.

ANSI C37.46-2000, American National Standard Specifications for Power Fuses and Fuse Disconnecting Switches.

ANSI C37.47-2000, American National Standard Specifications for Distribution Fuses and Fuse Disconnecting Switches Fuse Supports, and Current-Limiting Fuses.

IEEE Std C37.40-1993, IEEE Standard Service Conditions and Definitions for High-Voltage Fuses, Distribution Enclosed Single-Pole Air Switches, Fuse Disconnecting Switches, and Accessories (ANSI).

IEEE Std C37.41-2000, IEEE Standard Design Tests for High-Voltage Fuses, Distribution Enclosed Single-Pole Air Switches, Fuse Disconnecting Switches, and Accessories (ANSI).

IEEE Std C37.48-1997, IEEE Guide for Application, Operation, and Maintenance of High-Voltage Fuses, Distribution Enclosed Single-Pole Air Switches, Fuse Disconnecting Switches, and Accessories (ANSI).

Copyright © 2000 IEEE. All rights reserved.

Copyright The Institute of Electrical and Electronics Engineers, Inc.
Provided by IHS under license with IEEE
No reproduction or networking permitted without license from IHS
Not for Resale

The Working Group on the Revision of Fuse Standards, High-Voltage Fuse Subcommittee that prepared this standard had the following membership:

John G. Leach, *Chair*
T. A. Bellei, *Secretary*

J. Angelis
R. H. Arndt
L. Ronald Beard
Glenn R. Borchardt
H. E. Foelker
S. P. Hassler
G. J. Luzzi
J. R. Marek
F. L. Muench
R. Neville Parry
R. Kris Ranjan
P. Rosen
Tim E. Royster
J. S. Schaffer
E. W. Schmunk
John G. St. Clair
Elbert M. Worland
Maria Zandonella
Janusz Zawadzki

The following members of the balloting committee voted on this standard:

Cary J. Ahrano
Roy W. Alexander
Edwin Averill
L. Ronald Beard
T. A. Bellei
Stan Billings
Glenn R. Borchardt
Harvey L. Bowles
Ted Burse
Carlos L. Cabrera-Rueda
Raymond L. Capra
James F. Christensen
Alexander Dixon
Denis Dufournet
Douglas J. Edwards
Marcel Fortin
Mietek T. Glinkowski
Keith Gray
Harold L. Hess
Rick Jackson
Edward Jankowich
Joseph L. Koepfinger
Stephen R. Lambert
John G. Leach
George N. Lester
Albert Livshitz
R. W. Long
Nigel P. McQuin
Daleep C. Mohla
Georges F. Montillet
Anne F. Morgan
Jeffrey H. Nelson
Paul J. Notarian
R. Neville Parry
Gordon O. Perkins
R. Kris Ranjan
David N. Reynolds
Tim E. Royster
Gerald Sakats
J. S. Schaffer
Larry H. Schmidt
E. W. Schmunk
Curt A. Schwalbe
R. Kirkland Smith
John G. St. Clair
David Stone
David Swindler
Stan H. Telander
Malcolm V. Thaden
Charles L. Wagner
B. Scott Wilson
John G. Wood
Elbert M. Worland
Maria Zandonella
Janusz Zawadzki

When the IEEE-SA Standards Board approved this standard on 30 January 2000, it had the following membership:

Richard J. Holleman, *Chair*
Donald N. Heirman, *Vice Chair*
Judith Gorman, *Secretary*

Satish K. Aggarwal
Dennis Bodson
Mark D. Bowman
James T. Carlo
Gary R. Engmann
Harold E. Epstein
Jay Forster*
Ruben D. Garzon
James H. Gurney
Lowell G. Johnson
Robert J. Kennelly
E. G. "Al" Kiener
Joseph L. Koepfinger*
L. Bruce McClung
Daleep C. Mohla
Robert F. Munzner
Louis-François Pau
Ronald C. Petersen
Gerald H. Peterson
John B. Posey
Gary S. Robinson
Akio Tojo
Hans E. Weinrich
Donald W. Zipse

*Member Emeritus

Also included is the following nonvoting IEEE-SA Standards Board liaison:

Robert E. Hebner

Janet Rutigliano
IEEE Standards Project Editor

Copyright © 2000 IEEE. All rights reserved.
Copyright The Institute of Electrical and Electronics Engineers, Inc.
Provided by IHS under license with IEEE
No reproduction or networking permitted without license from IHS
Not for Resale

Contents

1. Scope 1

1.1 Fuses and fuse equipment 1
1.2 Description of fuse-enclosure packages (FEP) using expulsion type indoor power class fuses 2
1.3 Description of FEPs using current-limiting type indoor distribution and power class fuses 2

2. References 2

2.1 American National Standards 2
2.2 Other standards 3

3. Required tests 3

3.1 Device tests 4
3.2 FEP tests 4
3.3 Test values 4
3.4 Testing responsibility 4

4. Common test requirements 4

4.1 Test site conditions 5
4.2 Frequency and wave shape of test voltage 5
4.3 Devices to be tested 5
4.4 Acceptance criteria 5
4.5 Test-conductor dimensions 6
4.6 Mounting and grounding of the device for tests 6

5. Dielectric tests 7

5.1 Measurement of test voltages 8
5.2 Description of power-frequency dry-withstand voltage tests 8
5.3 Description of power-frequency wet-withstand voltage tests on outdoor devices 8
5.4 Description of power-frequency dew-withstand voltage tests on indoor devices 8
5.5 Description of impulse-withstand voltage tests 9
5.6 Distribution class expulsion type fuses, cutouts, and fuse-disconnecting switch test connections and test values 10
5.7 Distribution class oil cutout test connections and test values 10
5.8 Distribution class enclosed single-pole air switch test connections and test values 11
5.9 Power class expulsion and current-limiting fuse, and fuse-disconnecting switch test connections and test values 11
5.10 Distribution class current-limiting fuse and fuse-disconnecting switch test connections and test values 12
5.11 Distribution class and power class expulsion and current-limiting type fuses, and fuse disconnecting switches used in FEPs 12
5.12 Distribution and power class external fuses for shunt capacitors 14

6. Interrupting tests 14

6.1 Procedures common to all interrupting tests 14
6.2 Description of interrupting tests on distribution class open-link cutouts 16

--`,,`-`-`,,`,,`,`,,`---

Copyright © 2000 IEEE. All rights reserved.

Copyright The Institute of Electrical and Electronics Engineers, Inc.
Provided by IHS under license with IEEE
No reproduction or networking permitted without license from IHS

Not for Resale

6.3 Description of interrupting tests on distribution class oil cutouts 16
6.4 Description of interrupting tests on distribution class fuse cutouts (open and enclosed) (except current-limiting fuses) 16
6.5 Description of interrupting tests on power class fuses and fuse-disconnecting switches (except current-limiting fuses and liquid-submerged power fuses) 17
6.6 Description of interrupting tests on current-limiting power and distribution fuses 17
6.7 Description of interrupting tests for FEPs using current-limiting type indoor distribution and power class fuses 24
6.8 Description of interrupting tests for FEPs using liquid-submerged, expulsion type indoor power class fuses 25
6.9 Description of interrupting tests for air-insulated FEPs using expulsion type indoor power class fuses 26
6.10 Description of interrupting tests for external fuses for shunt capacitors 27

7. Load-break tests 31

7.1 Procedures common to all load-break tests 31
7.2 Description of load-break tests for all fused devices except distribution class oil cutouts 34
7.3 Description of load-break tests for distribution class oil cutouts 34

8. Making-current tests (distribution class oil cutouts) 34

8.1 Procedures common to all making-current tests for distribution class oil cutouts 34
8.2 Description of making-current tests for distribution class oil cutouts 35

9. Radio-influence tests 35

9.1 Procedures common to all radio-influence tests 35
9.2 Description of radio-influence tests on a single device 37
9.3 Description of radio-influence tests on multiple devices 37
9.4 Description of radio-influence tests for assembled apparatus 37

10. Short-time current tests 38

10.1 Mounting and grounding of device for test 38
10.2 Test connections 38
10.3 Test circuit ratio 38
10.4 Description of momentary current tests 39
10.5 Description of 15-cycle current tests 39
10.6 Description of 3 s current tests 40
10.7 Acceptance criteria 40

11. Temperature-rise tests 40

11.1 Procedures common to all temperature-rise tests 40
11.2 Description of temperature-rise tests (except on distribution oil cutouts) 41
11.3 Description of temperature-rise tests for air-insulated FEPs using expulsion type indoor power class fuses 41

12. Time-current tests 41

12.1 Procedures common to all time-current tests 41
12.2 Description of melting time-current tests 43
12.3 Description of total-clearing time-current tests 43

Copyright © 2000 IEEE. All rights reserved.
Copyright The Institute of Electrical and Electronics Engineers, Inc.
Provided by IHS under license with IEEE
No reproduction or networking permitted without license from IHS
Not for Resale

13. Manual-operation, thermal-cycle, and bolt-torque tests (distribution cutouts) 44

13.1 Description of manual-operation tests 44
13.2 Description of thermal-cycle tests 44
13.3 Description of torque tests 45

14. Liquid-tightness tests 45

14.1 Description of liquid-tightness tests 45
14.2 Test series 46
14.3 Acceptance criteria 46

15. Description of expendable-cap static-relief pressure tests 46

Annex A (informative) Recommended methods for determining the value of a sinusoidal current wave and a power-frequency recovery voltage 67

A.1 Current waves 67
A.2 Power-frequency recovery voltage 68

Annex B (informative) Recommended method for determining the equivalent steady-state rms current for plotting time-current curves 70

Annex C (informative) Simplified fault-current calculation 71

C.1 Interrupting duty 71
C.2 Mechanical and momentary duty 71

Annex D (informative) TRV parameters 72

D.1 Measurement of peak factor 73
D.2 Bibliography 75

Copyright © 2000 IEEE. All rights reserved.

Copyright The Institute of Electrical and Electronics Engineers, Inc.
Provided by IHS under license with IEEE
No reproduction or networking permitted without license from IHS
Not for Resale

--`,,`,,-`-`,,`,,`,`,,`---

Copyright The Institute of Electrical and Electronics Engineers, Inc.
Provided by IHS under license with IEEE
No reproduction or networking permitted without license from IHS

Not for Resale

IEEE Standard Design Tests for High-Voltage Fuses, Distribution Enclosed Single-Pole Air Switches, Fuse Disconnecting Switches, and Accessories

1. Scope

1.1 Fuses and fuse equipment

This standard specifies design test requirements for high-voltage (above 1000 V) fuses, distribution enclosed single-pole air switches, fuse disconnecting switches, and accessories for use on alternating-current distribution systems. The devices to which this standard applies are as follows:

a) Distribution and power class expulsion type fuses

b) Distribution and power class current-limiting type fuses

c) Distribution and power class fuse disconnecting switches

d) Item a) through item c) used in fuse enclosure packages (see types listed in 1.2 and 1.3)

e) Fuse supports, fuse mountings, and fuse hooks of the type intended for use with distribution and power class fuses, and fuse disconnecting switches

f) Removable switch blades of the type used exclusively with distribution class oil cutouts, power class fuses, and distribution class fuse disconnecting switches

g) Fuse links when used exclusively with distribution class oil cutouts, power class fuses, and distribution class fuse disconnecting switches

h) Distribution class oil cutouts

i) Distribution class enclosed single-pole air switches

j) Distribution and power classes of expulsion, current-limiting, and combination external capacitor type fuses used with a capacitor unit, groups of units, or capacitor banks.

Copyright © 2000 IEEE. All rights reserved.

Copyright The Institute of Electrical and Electronics Engineers, Inc.
Provided by IHS under license with IEEE
No reproduction or networking permitted without license from IHS
Not for Resale

The distribution and power class expulsion type fuses listed previously in item a) through item j) are the same as those covered in IEC 60282-2 (1995-09)[1]. The distribution class expulsion type fuses are the same as the IEC 60282-2 class "A" fuses, and the power class fuses are the same as the IEC 60282-2 class "B" fuses. At present, IEEE standards do not cover the class "C" fuses listed in IEC 60282-2 (1995-09). Some of the current-limiting type fuses listed above are the same as those covered in IEC 60282-1 (1994-12). IEEE Std C37.41-2000 contains specific requirements for more types of current-limiting fuses than are covered in IEC 60282-1 (1994-12). Use caution if devices specified and tested per ANSI/IEEE standards are compared to those specified and tested per IEC standards, as they may or may not be the same.

1.2 Description of fuse-enclosure packages (FEP) using expulsion type indoor power class fuses

Type 1E: A fuse mounted in an enclosure with relatively free air circulation within the enclosure (e.g., an expulsion fuse mounted in an enclosure or vault).

Type 2E: A fuse mounted in a container with restricted air flow surrounding the fuse, but with relatively free air circulation within the enclosure on the outside of the container (e.g., an expulsion fuse in an enclosure with insulating barriers that form a container that restricts the air flow).

Type 3E: A fuse directly immersed in liquid and mounted in an enclosure with relatively free liquid circulating around the fuse (e.g., an expulsion fuse in a switchgear enclosure).

1.3 Description of FEPs using current-limiting type indoor distribution and power class fuses

Type 1C: A fuse mounted in an enclosure with relatively free air circulation within the enclosure (e.g., a fuse mounted in a live-front pad mounted transformer or in a vault).

Type 2C: A fuse in a container mounted in an enclosure with restricted air flow surrounding the fuse, but with relatively free air circulation within the enclosure on the outside surfaces of the container (e.g., a fuse inside a canister in an enclosure or a vault).

Type 3C: A fuse in a container mounted in an enclosure with restricted air flow surrounding the fuse, but relatively free liquid circulating within the enclosure on the outside surfaces of the container (e.g., a fuse inside a canister immersed in transformer oil).

Type 4C: A combination of Types 2C and 3C, where the container is partially in air and partially in liquid (e.g., a fuse inside a transformer bushing).

Type 5C: A fuse directly immersed in liquid and mounted in an enclosure with relatively free liquid circulation around the fuse (e.g., an oil-immersed fuse in a transformer or switchgear enclosure).

2. References

2.1 American National Standards

This standard shall be used in conjunction with the following American National Standards. Although some of the following standards may be superseded by a revision approved by the American National Standards Institute, the revision may **not** apply.

[1]Information on references can be found in Clause 2.

Copyright © 2000 IEEE. All rights reserved.
Copyright The Institute of Electrical and Electronics Engineers, Inc.
Provided by IHS under license with IEEE
No reproduction or networking permitted without license from IHS
Not for Resale

ANSI C37.42-1996, American National Standard for Switchgear—Distribution Cutouts and Fuse Links—Specifications.[2]

ANSI C37.44-1981 (Reaff 1987), American National Standard Specifications for Distribution Oil Cutouts and Fuse Links.

ANSI C37.45-1981 (Reaff 1987), American National Standard Specifications for Distribution Enclosed Single-Pole Air Switches.

ANSI C37.46-2000, American National Standard Specifications for Power Fuses and Fuse Disconnecting Switches.

ANSI C37.47-2000, American National Standard Specifications for Distribution Fuses and Fuse Disconnecting Switches Fuse Supports, and Current-Limiting Fuses.

ANSI C63.2-1987, American National Standard for Electromagnetic Noise and Field Strength Instrumentation, 10 kHz to 1 GHz—Specifications.

IEEE Std 4-1978, IEEE Standard Techniques for High-Voltage Testing.[3]

IEEE Std 4-1995, IEEE Standard Techniques for High-Voltage Testing (ANSI).[4]

IEEE Std C37.20.3-1987 (Reaff 1992), IEEE Standard for Metal-Enclosed Interrupter Switchgear (ANSI).

IEEE Std C37.40-1993, IEEE Standard Service Conditions and Definitions for High-Voltage Fuses, Distribution Enclosed Single-Pole Air Switches, Fused Disconnecting Switches, and Accessories (ANSI).

IEEE Std C37.48-1997, IEEE Guide for Application, Operation, and Maintenance of High-Voltage Fuses, Distribution Enclosed Single-Pole Air Switches, Fuse Disconnecting Switches, and Accessories (ANSI).

2.2 Other standards

IEC 60282-1 (1994-12), High-voltage fuses—Part 1: Current-limiting fuses.[5]

IEC 60282-2 (1995-09), High-voltage fuses—Part 2: Expulsion fuses.

3. Required tests

The tests to be conducted upon completion of a design, or following a design change that affects performance, are summarized in Table 1[6] and are completely specified in the appropriate standards listed below:

— ANSI C37.42-1996
— ANSI C37.44-1981
— ANSI C37.45-1981
— ANSI C37.46-2000
— ANSI C37.47-2000

[2]ANSI publications are available from the Sales Department, American National Standards Institute, 11 West 42nd Street, 13th Floor, New York, NY 10036, USA (http://www.ansi.org/).

[3]IEEE Std 4-1978 has been superseded; however, copies can be obtained from Global Engineering, 15 Inverness Way East, Englewood, CO 80112-5704, USA, tel. (303) 792-2181 (http://global.ihs.com/).

[4]IEEE publications are available from the Institute of Electrical and Electronics Engineers, 445 Hoes Lane, P.O. Box 1331, Piscataway, NJ 08855-1331, USA (http://www.standards.ieee.org/).

[5]IEC publications are available from the Sales Department of the International Electrotechnical Commission, Case Postale 131, 3, rue de Varembé, CH-1211, Genève 20, Switzerland/Suisse (http://www.iec.ch/). IEC publications are also available in the United States from the Sales Department, American National Standards Institute, 11 West 42nd Street, 13th Floor, New York, NY 10036, USA.

[6]Tables have been placed after Clause 15.

Copyright © 2000 IEEE. All rights reserved.

Copyright The Institute of Electrical and Electronics Engineers, Inc.
Provided by IHS under license with IEEE
No reproduction or networking permitted without license from IHS Not for Resale

3.1 Device tests

For devices covered by this standard, all applicable tests need not be performed on each design modification of a previous qualified design. To assure that overall performance has not been adversely affected as a result of the design modification, sufficient tests shall be performed to ensure that the modified design will have a performance that meets or exceeds the ratings and performance requirements of the standards specified in Clause 3. For devices that have been assigned ratings or performance requirements that are different from the standards specified in Clause 3, the modified design shall have ratings and performance requirements that meet or exceed the values assigned to the original device.

Fuses connected in parallel shall be considered a separate design and be tested accordingly.

3.2 FEP tests

The design tests for FEPs are performed to determine the adequacy of a particular type of design, style, or model of equipment to meet its assigned ratings and for satisfactory operation. In general, a fuse need not be tested if it has already been tested in an equivalent enclosure.

3.3 Test values

3.3.1 Allowable tolerances

Testing parameters in this document and the specification documents for each device are listed as a value with an allowable plus tolerance, a value with an allowable minus tolerance, a minimum value, or a range. When a range is specified, the test may be performed anywhere within that range. When a minimum value or a value with a plus tolerance is specified, the manufacturer may perform the test at any value that equals or exceeds the minimum value. When a value with a minus tolerance is specified the manufacturer may perform the test at any value that is equal to or less than the maximum value allowed. When a minimum value or a tolerance is specified, testing by persons other than the manufacturer shall be at the specified value, or permission to test at a different level shall be obtained from the manufacturer.

3.3.2 Preferred values

In this standard and the specification standards referred to herein, the ratings and performance requirements represent preferred values and requirements. Special circuit or environmental conditions may require devices with ratings and performance that are different from the preferred values and requirements specified in these documents. For these devices, the ratings and performance requirements shall be agreed upon by the user and the manufacturer.

3.4 Testing responsibility

A fuse or switch manufacturer shall test their device and supply the appropriate application data. An FEP manufacturer is responsible for ensuring that appropriate testing has been performed and for supplying the appropriate application data.

4. Common test requirements

The requirements of Clause 4 are common to all tests. Where the conditions for a specific test deviate from these common test requirements, they are identified in the specific subclause for the test.

Copyright © 2000 IEEE. All rights reserved.
Copyright The Institute of Electrical and Electronics Engineers, Inc.
Provided by IHS under license with IEEE
No reproduction or networking permitted without license from IHS
Not for Resale

4.1 Test site conditions

4.1.1 Ambient temperature during test

The ambient temperature prevailing at the test site shall conform to usual service conditions, in accordance with 2.1 of IEEE Std C37.40-1993.

4.1.2 Atmospheric conditions during test

Tests shall be conducted under atmospheric conditions prevailing at the time and place of the test. It is recommended that the barometric pressure and dry and wet bulb thermometer readings be recorded so that applicable correction factors can be applied to the measurements.

4.2 Frequency and wave shape of test voltage

4.2.1 Frequency of test voltage

The frequency for all power-frequency tests shall be (50 ± 2) Hz or (60 ± 2) Hz, except as otherwise specified.

4.2.2 Wave shape of test voltage

A sine wave of acceptable commercial standards shall be applied to the device. For the definition of the wave shape, see IEEE Std 4-1995.

4.3 Devices to be tested

4.3.1 Condition of device to be tested

The device shall be new and in good condition, and tests shall be applied before the device is put into commercial service, unless otherwise specified.

4.3.2 Compatibility of components

Unless otherwise specified, tests performed according to this standard shall utilize components made by the same manufacturer or as recommended for use by the manufacturer.

4.4 Acceptance criteria

After successful completion of the required tests listed in this standard, and after replacing parts that are normally field replaceable, excluding the fuse holder, the condition of the device shall be as follows:

a) ***Mechanically:*** In substantially the same condition as at the beginning of the test. Depending on the current interrupted during interrupting tests, it is acceptable for the bore of expulsion devices to have some amount of erosion.

b) ***Electrically:*** Capable of carrying rated current continuously at the rated maximum voltage. If there is evidence to suggest the device may not be able to continuously carry rated current because of contact deterioration, a temperature-rise test shall be performed using the maximum size fuse link, fuse unit, or refill unit. This temperature-rise test shall be performed on the device at rated current for the time it takes for the temperature to stabilize. Temperatures reached by the device may be higher than those achieved by a new device. The criteria for acceptability is long-term temperature stabilization.

Copyright © 2000 IEEE. All rights reserved.

Copyright The Institute of Electrical and Electronics Engineers, Inc.
Provided by IHS under license with IEEE
No reproduction or networking permitted without license from IHS Not for Resale

c) ***Dielectrically:*** If there is evidence of insulator contamination from the test, a power-frequency dry-withstand test shall be performed at 75% of the rated value for the device.

NOTE—Examples of parts that are normally field replaceable include the fuse link, refill unit, expendable cap, and exhaust control device.

4.5 Test-conductor dimensions

4.5.1 Interrupting, load-break, making-current, and short-time test conductors

Electrical connections shall be made by a bare conductor connected to each terminal of the device being tested. These conductors shall be of sufficient size to adequately carry the test current for the anticipated time. The source side lead shall be connected to the upper terminal of the device and the return or load side lead to the lower terminal, unless different under normal service conditions or as specified by the manufacturer's recommendations.

4.5.2 Dielectric and radio-influence test conductors

Electrical connections shall be made by a bare conductor connected to each terminal of the device being tested. These conductors shall be the smallest size the device terminal is designed to accept. Use of other wire sizes is acceptable if it can be demonstrated that this size does not affect the test results.

4.5.3 Temperature rise and time-current test conductors

Electrical connections shall be made by a bare conductor connected to each terminal of the device being tested. These conductors shall be of the size and length specified in Table 17.

4.6 Mounting and grounding of the device for tests

Devices shall be mounted in the normal service position(s) recommended by the manufacturer. Where more than one service position exists, the orientation that results in the most onerous duty shall be used. When grounding of a particular part of the device is required during the test, the ground lead(s) shall be of a sufficient size so that it can adequately carry any anticipated current for the expected duration of current flow. If detection of the ground current is desired, current metering devices or short gaps shunted by a fine wire may be used. Specific mounting and grounding information for the various devices to be tested is described in 4.6.1 through 4.6.7.

4.6.1 Distribution class expulsion type fuses, cutouts, and fuse-disconnecting switches

Crossarm-mounted, distribution class, expulsion type fuses, cutouts, and fuse-disconnecting switches shall be mounted on a wood crossarm that measures 9 cm × 11 cm (3.5 in × 4.5 in) in cross section. The device mounting bracket shall be grounded by a lead attached to the mounting bracket on the side of the crossarm opposite the device. Devices designed for other types of mounting arrangements shall be mounted in their normal service positions and the mounting structures shall be grounded.

4.6.2 Distribution class oil cutouts

Distribution class oil cutouts shall be mounted on a rigid structure. The housing shall be grounded.

Copyright © 2000 IEEE. All rights reserved.
Copyright The Institute of Electrical and Electronics Engineers, Inc.
Provided by IHS under license with IEEE
No reproduction or networking permitted without license from IHS
Not for Resale

4.6.3 Distribution class enclosed single-pole air switches

Distribution class enclosed single-pole air switches shall be mounted on a wood crossarm that measures 9 cm × 11 cm (3.5 in × 4.5 in) in cross section. The mounting bracket shall be grounded by a lead attached to it on the side of the crossarm opposite the switch.

4.6.4 Power class expulsion and current-limiting fuses and fuse-disconnecting switches

Power class expulsion and current-limiting fuses, and fuse-disconnecting switches, shall be mounted on a rigid structure. The base shall be grounded.

4.6.5 Distribution class current-limiting fuses and fuse-disconnecting switches

Distribution class current-limiting fuses and fuse-disconnecting switches shall be mounted on a rigid structure. The base shall be grounded.

4.6.6 Distribution and power class fuses and fuse-disconnecting switches used in FEPs

Distribution and power class fuses and fuse-disconnecting switches used in FEPs shall be mounted in accordance with the fuse manufacturer's specifications. The enclosure and base of the device, as applicable, shall be grounded.

4.6.7 Distribution and power class external fuses for shunt capacitors

4.6.7.1 Capacitor line fuses

The fuse equipment shall be mounted as specified in 4.6.1, 4.6.4, 4.6.5, or 4.6.6.

4.6.7.2 Capacitor unit fuses

For interrupting tests on expulsion and current-limiting capacitor unit fuses that automatically provide an isolating gap after operation, the fuses shall be mounted in the same manner as they would be used in a capacitor bank. An energized fuse shall be placed on each side of the fuse under test, in the normal service position, to determine that any expulsion gas or part movement does not reduce clearances or dielectric properties that might cause flashovers and, as such, cause operation of these adjacent fuses.

Current-limiting fuses not having a disconnect or isolating feature may be mounted in any convenient manner.

For temperature-rise tests, the mounting configuration shall simulate the capacitor bank configuration where the fuse is to be used and shall be such that it does not restrict or promote heat transfer in a manner different from service conditions.

5. Dielectric tests

In this clause, IEEE Std 4-1978 and IEEE Std 4-1995 are used as references. The 1978 version is preferred, due to long field experience, but testing to the 1995 version, at the manufacturer's option, is also fully acceptable for the purposes of meeting this standard.

Dielectric test procedures shall be as specified in Clause 4 and as described in Clause 5.

Copyright © 2000 IEEE. All rights reserved.

Copyright The Institute of Electrical and Electronics Engineers, Inc.
Provided by IHS under license with IEEE
No reproduction or networking permitted without license from IHS Not for Resale

5.1 Measurement of test voltages

The voltage for dielectric tests shall be measured and corrected for standard conditions in accordance with IEEE Std 4.

5.2 Description of power-frequency dry-withstand voltage tests

5.2.1 Application of test voltage

The test voltage specified, with appropriate atmospheric corrections, shall be applied to the device for 1 min.

Seventy-five percent of the rated dry-withstand voltage may be applied in one step and then gradually raised to the required value in not less than 5 s and not more than 30 s.

5.2.2 Acceptance criteria

There shall be no flashover or damage to the insulating material.

NOTE—The terminal-to-terminal (open gap) required dielectric withstand values for some devices are 10% higher than those from terminal to ground. However, successful completion of these gap tests does not ensure that a device, when open, will flashover to ground instead of across the open gap.

5.3 Description of power-frequency wet-withstand voltage tests on outdoor devices

5.3.1 Application of test voltage

The test voltage specified, with appropriate atmospheric corrections, shall be applied to the device per IEEE Std 4. Corrections for relative humidity shall not be made on wet-withstand tests. Seventy-five percent of the rated wet-withstand voltage may be applied in one step and then gradually raised to the required value in not less than 5 s and not more than 30 s.

5.3.2 Application of test precipitation

Precipitation shall be applied per IEEE Std 4. In addition, the water shall be projected downward toward the front of the device and at an angle of 45° from the vertical, so that the spray strikes equally on the front and on one sidewall of the device.

5.3.3 Acceptance criteria

There shall be no flashover or damage to the insulating material.

5.4 Description of power-frequency dew-withstand voltage tests on indoor devices

5.4.1 Dew test procedure

The insulation of the device shall be thoroughly cleaned. The cleaned device shall be placed in a cold chamber (refrigerator) having a temperature of –10 °C to –15 °C until it is thoroughly cooled (may take 10–12 h). The device shall then be mounted in a test chamber having a normal temperature of 22 °C to 25 °C and a humidity of approximately 100%. When the device is completely covered with dew, the test voltage as specified in 5.4.2 shall be immediately applied.

Copyright © 2000 IEEE. All rights reserved.
Copyright The Institute of Electrical and Electronics Engineers, Inc.
Provided by IHS under license with IEEE
No reproduction or networking permitted without license from IHS
Not for Resale

5.4.2 Application of test voltage

The test voltage specified, with appropriate atmospheric corrections, shall be applied to the device for 10 s. Corrections for relative humidity shall not be made on dew-withstand tests. Seventy-five percent of the rated dew-withstand voltage may be applied in one step and then gradually raised to the required value in not less than 5 s and not more than 30 s.

5.4.3 Acceptance criteria

There shall be no flashover or damage to the insulating material.

5.5 Description of impulse-withstand voltage tests

5.5.1 Impulse test voltage wave shape

The wave shape and application of the 1.2/50 µs full wave test voltage is described in IEEE Std 4 and shall have the following limits for design tests.

The impulse test wave shall have a virtual front time less than or equal to 1.2 µs, a crest voltage greater than or equal to the rated full wave impulse withstand voltage, and a time, from initiation, of at least 50 µs for the voltage to fall to 50% of the crest value.

NOTE—In the event that laboratory limitations are encountered due to the capacitance of the test device, then the maximum rise achievable may be used if it is mutually acceptable to the user and the manufacturer.

5.5.2 Polarity of voltage for impulse withstand tests

The device being tested shall be capable of passing this test with voltages of both positive and negative polarity. Where there is evidence that one polarity (usually the positive) will consistently produce lower withstand voltages on this or similar equipment, it is acceptable to test using only that polarity.

5.5.3 Application of test voltage

Three consecutive impulses of the test voltage specified, with appropriate atmospheric corrections, shall be applied to the device.

5.5.4 Acceptance criteria

If no disruptive discharge occurs during any of the three consecutive impulses, the device has passed the test. If more than one disruptive discharge occurs, the device has failed the test. If one disruptive discharge occurs, then nine additional impulses of the test voltage specified are applied and, if no disruptive discharge occurs, the device has passed the test. If failure occurs in a non-self-restoring part of the insulation, the device has failed the test.

NOTE—The terminal-to-terminal (open gap) required dielectric withstand values for some devices are 10% higher than those from terminal to ground. However, successful completion of these gap tests does not ensure that a device, when open, will flashover to ground instead of across the open gap.

--`,,`,,`-`-`,,`,,`,`,,`---

Copyright © 2000 IEEE. All rights reserved.

Copyright The Institute of Electrical and Electronics Engineers, Inc.
Provided by IHS under license with IEEE
No reproduction or networking permitted without license from IHS Not for Resale

5.6 Distribution class expulsion type fuses, cutouts, and fuse-disconnecting switch test connections and test values

5.6.1 Test conductor arrangement

The bare wires shall project horizontally, at least 30 cm (12 in) from the terminals, in a straight line approximately parallel to the face of the crossarm or steel structure, and in such a manner as to not decrease the withstand value. Any necessary bends may be made at the terminals. For enclosed cutouts, the bare wires shall be located approximately in the center of the entrance holes.

5.6.2 Terminal-to-ground tests

For terminal-to-ground tests, the fuse holder, including the conducting element (fuse link or equivalent), shall be in the closed position. The test lead connection shall be made to one of the wires projecting from the terminals. The fuse mounting bracket shall be grounded.

5.6.3 Terminal-to-terminal tests

For terminal-to-terminal tests, the fuse holder, including the conducting element (fuse link or equivalent), shall be in the open position. The test lead connection shall be made to the wire projecting from the upper terminal. The ground test lead connection shall be made to the wire projecting from the lower terminal. The mounting bracket shall not be grounded.

5.6.4 Dielectric test values

The preferred dielectric test values for distribution open, enclosed, and open-link cutouts and fuses are listed in Table 2 of ANSI C37.42-1996.

5.7 Distribution class oil cutout test connections and test values

5.7.1 Test conductor arrangement

The conductor shall be connected to each terminal, to the end of the full length of insulated cables furnished with the cutout, or to the end of an insulated cable attached to the terminal in accordance with the manufacturer's instructions. Entrance terminals requiring taping or compound filling shall be assembled and taped or filled in accordance with the manufacturer's instructions. The connections coming from the cutout shall not approach the metal parts of the cutout closer than a projection of the center line of the entrance terminal. Insulated conductors shall terminate 30 cm (12 in) or more from any grounded metal member of the terminal or of a cable sheathing attached to the grounded metal member in the normal assembly thereof.

5.7.2 Terminal-to-ground tests

For terminal-to-ground tests, the fuse holder, including the conducting element (fuse link or equivalent), or the disconnecting switch blade, shall be in the closed position. The test lead connection shall be made to one of the wires projecting from the terminals. All groundable metal parts shall be grounded.

5.7.3 Dielectric test values

For terminal-to-ground tests, the preferred dielectric test values for distribution oil cutouts are listed in Table 3 of ANSI C37.44-1981.

Copyright © 2000 IEEE. All rights reserved.
Copyright The Institute of Electrical and Electronics Engineers, Inc.
Provided by IHS under license with IEEE
No reproduction or networking permitted without license from IHS
Not for Resale

5.8 Distribution class enclosed single-pole air switch test connections and test values

5.8.1 Test conductor arrangement

The bare wires shall project horizontally, at least 30 cm (12 in) from the terminals, in a straight line approximately parallel to the face of the crossarm or steel structure, and in such a manner as to not decrease the withstand value. Any necessary bends may be made at the terminals.

5.8.2 Terminal-to-ground tests

For terminal-to-ground tests, the switch blade shall be in the closed position. The test lead connection shall be made to one of the wires projecting from the terminals. The frame of the switch shall be grounded.

5.8.3 Terminal-to-terminal tests

For terminal-to-terminal tests, the switch blade shall be in the open position. The test lead connection shall be made to the wire projecting from the upper terminal. The ground test lead connection shall be made to the wire projecting from the lower terminal. The frame of the switch shall not be grounded.

5.8.4 Dielectric test values

The preferred dielectric test values for distribution enclosed single-pole air switches are listed in Table 2 of ANSI C37.45-1981.

5.9 Power class expulsion and current-limiting fuse, and fuse-disconnecting switch test connections and test values

5.9.1 Test conductor arrangement

The conductors shall project from the terminals of the fuse in (substantially) a straight line parallel to the fuse unit or fuse holder for an unsupported distance of at least the break distance of the fuse.

5.9.2 Terminal-to-ground tests

For terminal-to-ground tests, the fuse unit or fuse holder, including the conducting element (fuse link or equivalent), or the disconnecting switch blade, shall be in the closed position. The test lead connection shall be made to one of the wires projecting from the terminals. The base shall be grounded.

5.9.3 Terminal-to-terminal tests

For terminal-to-terminal tests, the fuse unit, fuse holder, or switch blade shall be in one of the following positions:

a) For fuse disconnecting switches, the fuse unit, fuse holder, or switch blade in the fully open position

b) For dropout power fuses, with the fuse holder or fuse unit in the dropout position

c) For non-dropout power fuses, with the fuse holder or fuse unit removed from the support

The high-voltage test lead shall be connected to the wire protruding from the upper terminal, and the ground lead shall be attached to the wire projecting from the lower terminal. The base shall not be grounded.

Copyright © 2000 IEEE. All rights reserved.

Copyright The Institute of Electrical and Electronics Engineers, Inc.
Provided by IHS under license with IEEE
No reproduction or networking permitted without license from IHS Not for Resale

A power fuse or fuse disconnecting switch rated 72.5 kV and above shall be equipped with standard strength insulator units; one or more insulator units identical to those supporting the current-carrying parts shall be added to each of the insulator supports or columns (only for the test).

A power fuse or fuse disconnecting switch rated 48.3 kV or below shall be mounted with its base insulated from a grounded metal structure by means of insulator units identical to those assembled on the fuse. In the case of a rear-connected indoor power fuse bus, support insulators of equivalent electrical characteristics shall be used to support the base (only for the test).

5.9.4 Dielectric test values

The preferred dielectric test values for all types of outdoor power fuses are listed in Table 3 of ANSI C37.46-2000; for all types of indoor power fuses, the preferred dielectric test values are listed in Table 4 of ANSI C37.46-2000.

5.10 Distribution class current-limiting fuse and fuse-disconnecting switch test connections and test values

5.10.1 Test conductor arrangement

The conductors shall project from the terminals of the fuse in substantially a straight line parallel to the fuse unit or fuse holder for an unsupported distance of at least the break distance of the fuse.

5.10.2 Terminal-to-ground tests

For terminal-to-ground tests, the fuse unit or fuse holder, including the conducting element (fuse link or equivalent), or the disconnecting switch blade, shall be in the closed position. The test lead connection shall be made to one of the wires projecting from the terminals. The base shall be grounded.

5.10.3 Terminal-to-terminal tests

For terminal-to-terminal tests, the fuse unit, fuse holder, or switch blade shall be in one of the following positions:

a) For fuse disconnecting switches, the fuse unit, fuse holder, or switch blade in the fully open position

b) For dropout current-limiting fuses, with the fuse holder or fuse unit in the dropout position

c) For non-dropout current-limiting fuses, with the fuse holder or the fuse unit removed from the support

The high-voltage test lead shall be connected to the wire protruding from the upper terminal, and the ground lead shall be attached to the wire projecting from the lower terminal. The base shall not be grounded.

5.10.4 Dielectric test values

The preferred dielectric test values for distribution current-limiting fuses are listed in Table 2 of ANSI C37.47-2000.

5.11 Distribution class and power class expulsion and current-limiting type fuses, and fuse disconnecting switches used in FEPs

When distribution class and power class expulsion or current-limiting type fuses are used in FEPs, dielectric testing of the complete FEP is required.

Copyright © 2000 IEEE. All rights reserved.
Copyright The Institute of Electrical and Electronics Engineers, Inc.
Provided by IHS under license with IEEE
No reproduction or networking permitted without license from IHS
Not for Resale

5.11.1 Arrangement

All fuses and other apparatus in the enclosure shall be mounted in their normal locations; the conductors shall be in their normal positions and of the size normally used in that enclosure. If the enclosure uses liquid or a gas other than air for the insulating medium, it should be filled in accordance with the manufacturer's specifications.

5.11.2 Terminal-to-ground tests

a) For terminal-to-ground tests, the fuse unit(s), fuse holder(s), or the disconnecting blade(s) shall be in the closed position.

b) Where a fuse link, fuse unit, or refill unit is required to complete the electrical circuit, it may be of any convenient size.

c) The base and the enclosure, if applicable, shall be grounded.

d) For multipole devices, all poles shall be tested. They may be energized simultaneously or separately (one at a time).

e) For devices that can be opened with a part left inserted and hanging in the opened position, an additional test shall be performed. For this test, energize the appropriate terminal(s) that will energize the part(s) that is (are) hanging in the open position. Conditions b), c), and d) above are applicable for this test.

5.11.3 Terminal-to-terminal tests

a) For terminal-to-terminal tests, the fuse unit, fuse holder, or disconnecting blade shall be in one of the following positions:

   1) For fuse disconnecting switches, the fuse unit, fuse holder, or disconnecting blade in the fully open position
   2) For dropout type fuses, with the fuse unit or fuse holder in the dropout position
   3) For non-dropout type fuses, with the fuse unit or fuse holder removed from the support

b) Where a fuse link, fuse unit, or refill unit is required to complete the electrical circuit, it may be of any convenient size.

c) The base or the enclosure, if applicable, shall not be grounded. It may be necessary to insulate the enclosure from ground when the open gap dielectric value exceeds the terminal-to-ground value.

d) For multipole devices, all poles may be energized simultaneously.

e) The terminal(s) to be energized are

   1) Incoming terminal(s) with outgoing terminal(s) grounded

   2) Outgoing terminal(s) with incoming terminal(s) grounded

   If the device is completely symmetrical, only test 1) is required.

5.11.4 Closed position, pole-to-pole (phase-to-phase) tests for multipole devices

a) For pole-to-pole closed position tests, the fuse unit(s), fuse holder(s), or disconnecting blade(s) shall be in the closed position.

b) Where a fuse link, fuse unit, or refill unit is required to complete the electrical circuit, it may be of any convenient size.

--`,,`-`-`,,`,,`,`,,`---

Copyright © 2000 IEEE. All rights reserved.

Copyright The Institute of Electrical and Electronics Engineers, Inc.
Provided by IHS under license with IEEE
No reproduction or networking permitted without license from IHS Not for Resale

c) The base and the enclosure, if applicable, shall not be grounded. It may be necessary to insulate the enclosure from ground when the pole-to-pole dielectric value exceeds the terminal-to-ground value.

d) One pole at a time shall be energized with all other poles grounded. For three-pole devices, if the outer poles are symmetrical with respect to the center pole, testing of only one outer pole and the center pole is required.

5.11.5 Open position, pole-to-pole (phase-to-phase) tests for multipole devices

a) For pole-to-pole open position tests, the fuse unit, fuse holder, or disconnecting blade shall be in one of the following positions:

   1) For fuse disconnecting switches, in the fully open position
   2) For dropout type fuses, with the fuse unit or fuse holder in the dropout position
   3) For non-dropout type fuses, with the fuse unit or fuse holder removed from the support

b) Where a fuse link, fuse unit, or refill unit is required to complete the electrical circuit, it may be of any convenient size.

c) The base and the enclosure, if applicable, shall not be grounded. It may be necessary to insulate the enclosure from ground when the pole-to-pole dielectric value exceeds the terminal-to-ground value.

d) Taking one pole at a time, each end shall be energized separately, with all other poles on that end grounded. For three-pole devices, if the outer poles are symmetrical with respect to the center pole, testing each end of only one outer pole and each end of the center pole is required.

5.11.6 Dielectric test values

The preferred terminal-to-ground, terminal-to-terminal, and pole-to-pole test values for all types of power class fuses are specified in Table 4 of ANSI C37.46-l981.

The preferred terminal-to-ground, terminal-to-terminal and pole-to-pole test values for all types of distribution class current-limiting fuses are specified in Table 3 of ANSI C37.47-l981. For all distribution class expulsion type fuses, the values are specified in Table 2 of ANSI C37.42-l996.

5.12 Distribution and power class external fuses for shunt capacitors

5.12.1 Capacitor line fuses

Capacitor line fuses shall be tested per the requirements for the appropriate equipment, as specified in either 5.6, 5.9, 5.10, or 5.11.

5.12.2 Capacitor unit fuses

Capacitor unit fuses are normally mounted on the bus of the capacitor bank, or sometimes on one of the bushings of the capacitor. The dielectric strength of the system is determined by the insulation level of the bus of the capacitor bank, the capacitor bushing, and/or the way the fuse is positioned in the system. The dielectric strength of a capacitor unit fuse, without consideration of the mounting arrangement, is not definable.

6. Interrupting tests

6.1 Procedures common to all interrupting tests

Interrupting test procedures shall be as specified in Clause 4 and as described in Clause 6.

Copyright © 2000 IEEE. All rights reserved.
Copyright The Institute of Electrical and Electronics Engineers, Inc.
Provided by IHS under license with IEEE
No reproduction or networking permitted without license from IHS
Not for Resale

6.1.1 Test circuit

6.1.1.1 Test circuit configuration

The interrupting tests shall be made using a single-phase, alternating-current circuit. The circuit elements used to control the current and *X*/*R* ratio shall be in series with each other and the fuse. The testing circuit frequency shall be the rated frequency ± 2 Hz. If 60 Hz test facilities are not available, tests at 50 Hz ± 2 Hz are acceptable for verifying 60 Hz ratings. Note that 50 Hz tests may produce lower peak let-through currents, but may let through more I^2t than 60 Hz tests.

The parameters of the test circuits are specified in Tables 2 through 16. The prospective (available) current parameters given in Tables 2, 3, 5, 6, 9, 12, 13, and 16 are expressed in symmetrical amperes. The test circuit must provide a symmetrical short-circuit current as required by the appropriate table. Also, the asymmetrical current must be equal to or greater than the asymmetrical current associated with the symmetrical current and *X*/*R* ratio specified in the appropriate table (see Figure C.1). If tests are made at an *X*/*R* ratio higher than is specified in the appropriate table, then the test duty may be more severe, because the prospective asymmetrical current will be equal to or greater than the asymmetrical current associated with the symmetrical current and specified *X*/*R* ratio. It is not permissible to decrease the prospective symmetrical current to achieve the proper asymmetrical current value.

Typical test circuits are shown in Figure D.1. Methods of determining TRV parameters are also shown in Annex D. Overvoltage protective equipment used for protecting test circuit apparatus shall not significantly affect the current through the fuse or the recovery voltage across the fuse.

6.1.1.2 Determination of the X/R ratio and the prospective (available) short-circuit current of the test circuit

The device to be tested shall be replaced in the test circuit with a connection having negligible impedance. For interrupting tests involving short melting times of the fusible element (i.e., less than or equal to 1.5 cycles), both the *X*/*R* ratio and the prospective symmetrical short-circuit current shall be determined as follows.

To determine the symmetrical short-circuit current, power shall be applied at the point on the voltage wave that minimizes the offset in the first loop (i.e., power should be applied at an angle approximately equal to the value of the arctan [*X*/*R*] with respect to voltage zero, where *X*/*R* is the estimated *X*/*R* ratio of the test circuit). The symmetrical current may be calculated in accordance with Figure A.1. The root-mean-square (rms) current should be measured during the first cycle of current.

To determine the rms asymmetrical short-circuit current, the power shall be applied at the point on the voltage wave (i.e., near a voltage zero) that produces maximum offset in the first current loop. The rms total asymmetrical current, including the direct-current component as measured at the time of the first major peak, should be determined. This may be accomplished by following the methods described in Annex A.

Determination of the test-circuit symmetrical current may be combined with the asymmetrical current determination, provided that the circuit current is of sufficiently long duration so the symmetrical current component has achieved a steady-state value (i.e., the symmetrical current value is constant between cycles). This may be accomplished by following the methods described in Annex A.

After the symmetrical and asymmetrical short-circuit current values are obtained, the *X*/*R* ratio of the test circuit may be determined by calculating the ratio of the rms asymmetrical current to the rms symmetrical current component (see Figure C.1).

Copyright © 2000 IEEE. All rights reserved.

Copyright The Institute of Electrical and Electronics Engineers, Inc.
Provided by IHS under license with IEEE
No reproduction or networking permitted without license from IHS Not for Resale

For interrupting tests involving long melting times of the fusible element (i.e., greater than 1.5 cycles), it may be appropriate to use alternate methods to determine the circuit *X*/*R* ratio. For these tests, the rms value of the current shall be measured immediately prior to the initiation of arcing.

6.1.1.3 Application of test power

The device shall be tested in the circuit described in 6.1.1.1 and 6.1.1.2, with the negligible impedance connection removed. Power shall be applied at a point on the voltage wave that produces the conditions specified in the appropriate table covering the particular device being tested.

6.1.2 Acceptance criteria

The condition of the device after interrupting tests shall be as specified in 4.4.

6.2 Description of interrupting tests on distribution class open-link cutouts

Tests shall be made at the rated maximum voltage in accordance with Table 2. A description of the required test series is as follows:

— *Series 1:* Verification of fuse operation with prospective currents equal to its rated interrupting current.

— *Series 2:* Under consideration.

— *Series 3:* Verification of fuse operation with small overload currents.

6.3 Description of interrupting tests on distribution class oil cutouts

Tests shall be made at the rated maximum voltage in accordance with Table 3. A description of the required test series is as follows:

— *Series 1:* Verification of fuse operation with prospective currents equal to its rated interrupting current.

— *Series 2:* Under consideration.

— *Series 3:* Under consideration.

— *Series 4:* Verification of fuse operation with small overload currents.

6.4 Description of interrupting tests on distribution class fuse cutouts (open and enclosed) (except current-limiting fuses)

6.4.1 Test series for single-voltage-rated fuse cutouts

Tests shall be made at the rated maximum voltage in accordance with Table 5. A description of the required test series is as follows:

— *Series 1:* Verification of fuse operation with prospective currents equal to its rated interrupting current.

— *Series 2:* Verification of fuse operation with the prospective currents ranging from 70% to 80% of its rated interrupting current.

— *Series 3:* Verification of fuse operation with prospective currents ranging from 20% to 30% of its rated interrupting current.

— *Series 4:* Verification of fuse operation with prospective currents in the range of 400–500 A.

— *Series 5:* Verification of fuse operation with small overload currents.

Copyright © 2000 IEEE. All rights reserved.
Copyright The Institute of Electrical and Electronics Engineers, Inc.
Provided by IHS under license with IEEE
No reproduction or networking permitted without license from IHS
Not for Resale

6.4.2 Test series for slant-voltage-rated (multiple-voltage-rated) fuse cutouts (example: 15/27 kV)

Tests shall be made at the rated maximum voltages specified and in accordance with Table 6. A description of the required test series is as follows:

— *Series 1:* Verification of fuse operation with prospective currents equal to its rated interrupting current and conducted at its maximum voltage to the left of the slant.

— *Series 2:* Verification of fuse operation with prospective currents ranging from 70% to 80% of its rated interrupting current and conducted at its maximum voltage to the left of the slant.

— *Series 3:* Verification of fuse operation with prospective currents ranging from 20% to 30% of its rated interrupting current and conducted at its maximum voltage to the right of the slant.

— *Series 4:* Verification of fuse operation with prospective currents in the range of 400–500 A and conducted at its maximum voltage to the right of the slant.

— *Series 5:* Verification of fuse operation with small overload currents and conducted at its maximum voltage to the right of the slant.

— *Series 6:* Verification of fuse operation of two fuse cutouts in electrical series connection with prospective currents equal to the rated interrupting current of both series devices and conducted at its maximum rated voltage to the right of the slant.

6.5 Description of interrupting tests on power class fuses and fuse-disconnecting switches (except current-limiting fuses and liquid-submerged power fuses)

Tests shall be made at the voltages specified and in accordance with Table 9. A description of the required test series is as follows:

— *Series 1:* Verification of fuse operation with prospective currents equal to its rated interrupting current and conducted at 87% of its rated maximum voltage.

— *Series 2:* Verification of fuse operation with prospective currents ranging from 87% to 91% of its rated interrupting current and conducted at its rated maximum voltage.

— *Series 3:* Verification of fuse operation with prospective currents ranging from 60% to 70% of its rated interrupting current and conducted at its rated maximum voltage.

— *Series 4:* Verification of fuse operation with prospective currents ranging from 20% to 30% of its rated interrupting current and conducted at its rated maximum voltage.

— *Series 5:* Verification of fuse operation with prospective currents in the 400–500 A range and conducted at its rated maximum voltage.

— *Series 6:* Verification of fuse operation with small overload currents and conducted at its rated maximum voltage.

6.6 Description of interrupting tests on current-limiting power and distribution fuses

6.6.1 Test series

Tests shall be made at the voltages specified and in accordance with Table 12. Descriptions of the required test series are as follows.

--`,-`-`,,`,,`,`,,`---
Copyright © 2000 IEEE. All rights reserved.

Copyright The Institute of Electrical and Electronics Engineers, Inc.
Provided by IHS under license with IEEE
No reproduction or networking permitted without license from IHS
Not for Resale

It is not necessary to make interrupting tests on fuse units of all current ratings of a homogeneous series; see 6.6.4 for requirements to be met and tests to be performed.

— *Series 1:*

a) Current-limiting power fuses: Verification of fuse operation with prospective currents equal to its rated interrupting current, I_1, and conducted at 87% of its rated maximum voltage, and with prospective currents equal to 87% of its rated interrupting current, I_1, and conducted at its rated maximum voltage.

b) Current-limiting distribution fuses: Verification of fuse operation with prospective currents equal to its rated interrupting current, I_1, and conducted at its rated maximum voltage.

— *Series 2:*

Verification of fuse operation with prospective current, I_2, at which current initiation occurs when a high level of energy is stored in the inductance of the circuit.

— *Series 3:*

Verification of fuse operation at low current, I_3.

a) For backup fuses, I_3 is the rated minimum interrupting current assigned by the manufacturer.

b) For general-purpose fuses, I_3 is the current value that causes melting of the fuse in no less than 1 h.

c) For full-range fuses, I_3 is the minimum test current. The minimum test current is a current that is less than the minimum continuous current that causes melting of the fusible element(s) with the fuse applied at the maximum ambient temperature specified by the manufacturer. See 6.6.3.1 for the method of determining this current.

The following additional requirements may apply:

— In the case of fuses that incorporate different current interrupting mechanisms within the same physical envelope (e.g., current-limiting elements and expulsion elements in series), Test Series 1, 2, and 3 shall be augmented by additional tests to prove correct operation in the region(s) of current where the interrupting duty is transferred from one interrupting mechanism to another. Because fuse designs differ widely, specifying test requirements, applicable to all designs, is not possible. However, the general criterion to be observed is to test in the region where the low current interrupter sees a maximum interrupting current and the high current interrupter sees a minimum interrupting current. The interrupting mechanisms should be shown to operate correctly to effect proper interruption within this transitional current region.

— If, when making tests in accordance with Series 2, the requirements of Series 1 are completely met for one or more tests (TRV parameters excepted), then these tests need not be repeated as a part of Series 1.

— Traditionally, the I_2 test condition has approximated a condition of maximum arc energy in the tested fuse. If a particular design exhibits maximum arc energy at a significantly different current than that meeting the I_2 criteria, additional tests should be performed at a current that approximates the maximum arc energy.

Copyright © 2000 IEEE. All rights reserved.
Copyright The Institute of Electrical and Electronics Engineers, Inc.
Provided by IHS under license with IEEE
No reproduction or networking permitted without license from IHS
Not for Resale

— In very exceptional cases, the current, I_2, may be higher than the rated interrupting current, I_1. Series 1 and 2 shall then be replaced by six tests at rated interrupting current with making angles as nearly as possible equally distributed with approximately 30° between each. (Parameters used will be those of Series 2 [see Table 12] except making angle and value of instantaneous current at initiation of arcing.)

NOTES

1—Values of I_1, I_2, and I_3 are the rms values of the ac component of the current.

2—As a guide, the value of the current, I_2, to comply with this requirement may be determined by one of the following methods:

a) From the following equation, if one test at a current 150 times the current rating or higher has been made under symmetrical fault initiation in Series 1:

$$I_2 = i_1\sqrt{\frac{i_1}{I_1}}$$

where

I_2 is prospective current for Series 2,
i_1 is instantaneous current at instant of melting in Series 1,
I_1 is prospective current in Series 1.

b) By taking between three and four times the current that corresponds to a melting time of 0.01 s on the time/current characteristic.

6.6.2 Alternate test method for Series 3 tests on current-limiting fuses

Test Series 3 may be performed using a single high-voltage source throughout the test (as in Series 1 or Series 2). Where melting times are long, and/or where there are limitations in test-station capability, Series 3 may be conducted as a two-part test. For the first part of the test, current is supplied from a low-voltage source. For the second part, which includes the interruption of the current by the fuse, current shall be supplied from a high-voltage source. The test circuit for the two-part test is shown in Figure 1.

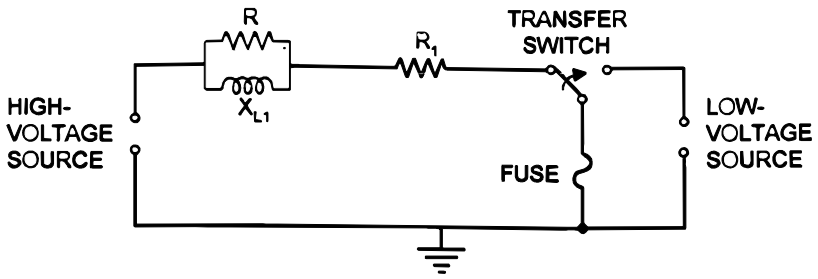

Figure 1—Alternate test circuit for Series 3 test of current-limiting fuses

Copyright © 2000 IEEE. All rights reserved.

Copyright The Institute of Electrical and Electronics Engineers, Inc.
Provided by IHS under license with IEEE
No reproduction or networking permitted without license from IHS
Not for Resale

It is also permissible to perform a two-part test using a single high-voltage source where the power factor for part of the melting period is of a lower value. In this case, the changeover to the correct power factor must occur before arcing commences.

6.6.2.1 Circuit requirements and testing procedures for a two-part test

a) The circuit requires a low-voltage power source that is able to cause the desired current to flow through the fuse under test and that provides a means for holding the current constant during the test. The value of the low-voltage current may be higher than I_3 for some or all of the melting test period, as explained in 6.6.2.2, item b) and item c).

b) The circuit also requires a high-voltage source, as described in 6.1.1. The value of the high-voltage current is the current, I_3, as defined in 6.6.1.

c) Provision shall be made for switching either manually or automatically from the low-voltage source to the high-voltage source at the desired instant during each test. The time interval during which the current is interrupted shall not exceed 0.2 s. It should be noted that, at the X/R values specified for this test, the current should have very little asymmetry when the circuit is randomly switched to the high-voltage source. A synchronous closing switch is, therefore, not necessary for closing in the high-voltage circuit. If the fuse manufacturer allows a higher X/R ratio than specified for the test, a synchronous closing switch may be necessary for controlling the symmetry of the current.

d) In general, the changeover shall take place while at least one fuse element is still carrying current. For a multi-elemented fuse, this would be in the period where elements are melting successively, as shown by step increases in the voltage developed across the fuse.

e) With the consent of the manufacturer, it is permissible for the changeover to be delayed until all the fuse elements (but not an indicator element, where included in the fuse design) have melted. This procedure is of value in cases where it is difficult to detect the onset of element melting, or where the value of melting current has to be significantly higher than the chosen value of Series 3 current, as explained in 6.6.2.2, item b) and item c).

   Test method e) is held to be more onerous for the fuse than test method d). Testing to method d) is closer to actual service conditions; therefore, if a failure occurs when method e) is used, the Series 3 tests may be repeated using method d).

6.6.2.2 Value of melting current for Series 3 tests

a) For tests on backup fuses, where the melting time is less than 1 h, the low-voltage source shall be set to the value, I_3, and maintained at this value throughout the test.

b) For general-purpose fuses, where a minimum time to melt of 1 h is required, the current of the low-voltage source shall be set to I_3, but it may be increased after 1 h by up to 1.15 times I_3 to induce melting.

c) For full-range fuses, I_3 shall be determined using 6.6.3.1. The low-voltage source may be set to a value higher than I_3 throughout the test in order to avoid an unnecessarily long testing time, provided the resulting melting time is not less than 1 h.

   After 1 h, the low-voltage current may be increased by up to 1.15 times its original value in order to induce melting.

--`,,`-`-`,,`,,`,`,,`---
Copyright © 2000 IEEE. All rights reserved.
Copyright The Institute of Electrical and Electronics Engineers, Inc.
Provided by IHS under license with IEEE
No reproduction or networking permitted without license from IHS
Not for Resale

6.6.3 Test method for Series 3 tests on full-range current-limiting fuses

6.6.3.1 Method of determining the minimum test current (I_3) of the fuse

This procedure may be performed by the manufacturer.

Three samples shall be used for the determination of the I_3 value. Each sample is placed in a stable thermal environment, such as a temperature-controlled oven, set to the maximum temperature for which the fuse is rated by the manufacturer to have an interrupting capability (rated maximum application temperature).

Once the fuse body has reached a stable temperature, any circulating air fans must be switched off for the remainder of the test. Current is then applied to the fuse. When the fuse body temperature has again stabilized, the value of the current is increased. This process is repeated until the fuse melts open. For the purpose of this test, temperature is defined as being stable when the temperature rise above ambient does not exceed 2% per hour.

The increments by which the current is increased are not specified, but could typically be in the range of 5% to 10%. It should be recognized that larger increases will reduce the number of steps, but may result in a more onerous test current, while smaller increases will yield a more accurate test current but require more testing steps.

The highest current that each of the three fuses carried without melting is then considered. I_3 is defined as 0.9 times the lowest current of these three values. The 0.9 is used to allow for manufacturing tolerances, hence the I_3 test is then performed with a current slightly less than the lowest current which could melt a fuse when it operates, surrounded by the maximum temperature for which it is rated by the manufacturer.

6.6.3.2 Method of performing the Series 3 tests

Full-range type fuses shall be capable of interrupting the lowest current that can produce melting when the fuse is subjected to its rated maximum application temperature. This temperature shall be at least 40 °C. It is necessary to ensure that the Series 3 test simulates this condition in order to check the ability of the fuse to withstand any high temperatures generated during operation. Test Series 3, shall, therefore, be performed using the following method.

Each sample shall be placed in a stable thermal environment, such as a temperature-controlled oven, set at the rated maximum application temperature of the fuse.

Once the fuse body has reached a stable temperature, any circulating air fans used shall be switched off for the remainder of the test. Stability is defined as having the fuse within 2% of the oven temperature in degrees Celsius.

A two-part interrupting test is then carried out as described in 6.6.2. The high-voltage current, $I_{3,}$ is determined from the thermal testing described in 6.6.3.1.

Temperatures higher than the rated maximum application temperature may be used to expedite melting, if agreed to by the manufacturer. In all cases, the melting time shall be at least 1 h.

Physical changes in fuse components that result from long-term application, and which may affect interruption, should be considered when conducting testing.

Copyright © 2000 IEEE. All rights reserved.

Copyright The Institute of Electrical and Electronics Engineers, Inc.
Provided by IHS under license with IEEE
No reproduction or networking permitted without license from IHS Not for Resale

6.6.4 Interrupting tests on a homogeneous series of fuses

In a homogeneous series of current-limiting fuse units, interrupting tests need only be made in accordance with the following table.

Homogeneous series achieved by	Test series	Fuse units to be tested		
		A	B	C
Progressive monotonic change in n* or s**, or both, with respect to rated current $n(A) \leq n(B) \leq n(C)$ $s(A) \leq s(B) \leq s(C)$	1	X	—	X
	2[a]	X	—	X
	3	X	X[b]	X
Constant n, increasing s $s(A) < s(B) < s(C)$	1	X	—	X
	2[a]	X	—	X
	3	—	—	X
Constant s, increasing n $n(A) < n(B) < n(C)$	1	X	—	X
	2	—	—	X
	3[c]	X	—	X

Symbols in the chart are defined as:
A fuse unit of lowest current rating
B any fuse unit of a current rating between A and C
C fuse unit of highest current rating
X shows tests that are to be performed
n* the number of parallel fuse elements
s** cross-sectional area of each fuse element

The parameters to be considered are:
s(A),s(B),s(C) is cross-section of the individual main fuse element in A, B, C.
n(A),n(B),n(C) is number of main fuse elements in A, B, C.

[a]The test current, I_2, for fuse units A and C will have been chosen according to the current ratings of fuse units A and C, respectively.

[b]Every rating need not be tested; however, with diminishing current ratings, a test is to be made only for the current rating at which the number of elements is reduced.

[c]The fuse unit with the lowest current rating shall contain at least two main fuse elements in addition to the element, if present, used for operating an indicator or striker.

Fuse units are considered as forming a homogeneous series when their characteristics comply with the following:

a) Rated voltage, interrupting current, and frequency shall be the same.

b) All materials shall be the same.

c) All dimensions of the fuse unit shall be the same, except the cross section of the fuse elements and the number of fuse element(s), as detailed below in item d) through item h).

d) In any fuse unit, the main fuse elements shall be identical.

e) The laws governing the variations in the cross-sections of individual fuse elements along their length shall be the same.

f) All variations in thickness, width, and number shall be monotonic (continually varying in the same direction for a given direction of the same variable) with respect to rated current; thus, balancing an increase in cross-section by reducing the number of fuse elements, and vice versa, is not allowed.

--`,,`-`-`,,`,,`,`,,`---
Copyright © 2000 IEEE. All rights reserved.
Copyright The Institute of Electrical and Electronics Engineers, Inc.
Provided by IHS under license with IEEE
No reproduction or networking permitted without license from IHS
Not for Resale

g) The variation in distance, if any, between individual fuse elements and in distance, if any, between the fuse element(s) and fuse barrel shall be monotonic with respect to the rated current.

h) A special fuse element used for an indicator or striker is exempt from item e) and item f) above; however, this element shall be the same for all the fuse units.

6.6.5 Interpretation of homogeneous series interrupting test results

If the results of tests made according to the table shown in 6.6.4 are successful, any current rating of fuse units within the homogeneous series shall be deemed to comply with the interrupting requirements of this standard. If a fuse unit does not perform satisfactorily on one or more test series, that fuse unit shall be rejected from the homogeneous series; however, such failure does not necessarily cause rejection of the other current ratings. It should be noted that a particular range of current ratings in one barrel size may constitute one homogeneous series for one test duty, but two or more homogeneous series for the purpose of another test duty. The values of minimum interrupting current of fuse units not tested are determined from test Series 3 as follows:

a) Constant n, increase of s: It is assumed that the melting time at I_3 for fuse unit A and B is not less than that for fuse unit C. The test in accordance with the table shown in 6.6.4, therefore, proves that fuse units A and B have a minimum interrupting current ascertained by reading from their time/current characteristics the currents corresponding to the melting time given by the minimum interrupting current of fuse unit C and its time/current characteristics.

b) Constant s, increase of n: The minimum interrupting current, $I_{3,}$ of fuse units A and C may or may not be the same. If they are the same, I_3 is deemed to apply to fuse unit B. If they are different, a straight line is drawn through the points corresponding to the respective minimum interrupting currents on the time/current characteristics, plotted to a log-log scale, of fuse units A and C. The intersection of this line and the time/current characteristics of fuse unit B is deemed to define the minimum interrupting current of fuse unit B.

c) Values of the minimum interrupting current less than those derived from either item a) or item b) above, shall be proved by a separate test.

6.6.6 Overvoltages produced by current-limiting fuses

Overvoltages produced during the Series 1 and 2 interrupting tests specified in 6.6.1 shall be recorded by a cathode ray oscillograph or other instrument having a frequency response greater than that of the waveforms being measured.

6.6.7 Cutoff (peak let-through) current for current-limiting fuses

The values of the cutoff (peak let-through) current obtained from the oscillograms taken during Series 1 interrupting tests specified in 6.6.1 shall not exceed those specified by the fuse manufacturer.

The characteristic curve showing the relationship of cutoff current to prospective current in the current-limiting range shall be plotted on log-log coordinate paper with cutoff current (peak let-through) on the y-axis and prospective current (rms symmetrical available) on the x-axis, so that the cutoff current for each rating of current-limiting fuse can be obtained.

Copyright © 2000 IEEE. All rights reserved.

Copyright The Institute of Electrical and Electronics Engineers, Inc.
Provided by IHS under license with IEEE
No reproduction or networking permitted without license from IHS Not for Resale

6.7 Description of interrupting tests for FEPs using current-limiting type indoor distribution and power class fuses

6.7.1 Use of current-limiting fuses in enclosures

Many applications require the use of current-limiting fuses in enclosures where the fuse and associated contacts may be subjected to air temperatures above 40 °C. Other applications may require the fuse to be immersed in a liquid such as transformer oil. Current-limiting fuses intended for such application shall comply with the applicable design tests specified in this subclause and in 6.6.

When current-limiting fuses are applied in enclosures of any type, the performance characteristics of the total system shall be evaluated. This evaluation of the total system shall be the responsibility of the supplier of the FEP. The following tests and test descriptions reflect this basic requirement. (See 1.3 for descriptions of the FEP types covered by this subclause.)

6.7.2 Test site conditions

6.7.2.1 Ambient temperature during test

If the FEP uses a general purpose fuse, the tests conducted on FEP types 2C, 3C, or 4C (in accordance with 6.7) shall be performed at two ambient temperatures. The first set of tests shall be at an ambient temperature of (25 $\pm$ 15) °C and the second set of tests shall be at the rated maximum ambient temperature (maximum reference ambient temperature) specified by the FEP supplier. If the FEP uses a full-range fuse, or back-up fuse, the tests conducted on the FEP types 2C, 3C, or 4C shall be performed only at the rated maximum application temperature. For FEP types 1C and 5C, the tests shall be conducted at the rated maximum application temperature specified by the FEP supplier for any type of fuse.

In all cases, the device shall be stabilized at the ambient temperature before the test current is applied to the fuse. Stability is defined as having all parts of the device within 2% of the desired temperature, in degrees Celsius.

a) For Type 1C fuses, the rated maximum application temperature is the air temperature inside the enclosure.

b) For Type 2C fuses, the rated maximum application temperature is that of the air outside the container.

c) For Type 3C and Type 4C fuses, the rated maximum application temperature is that of the liquid outside the container.

d) For Type 5C fuses, the rated maximum application temperature is that of the liquid surrounding the fuse.

NOTE—Liquid-immersible fuses are designed for partial or total immersion in liquid without the need for a separate fuse container. These fuses are designed for various types of equipment, and the liquid temperature to which the fuse will be subjected will depend on the application. The specific test descriptions, therefore, do not specify a maximum test temperature, but utilize the rated maximum application temperature, (maximum reference ambient temperature) specified by the FEP supplier.

6.7.2.2 Temperature of device after test

The FEP shall be allowed to cool naturally during the voltage withstand period.

Copyright © 2000 IEEE. All rights reserved.
Copyright The Institute of Electrical and Electronics Engineers, Inc.
Provided by IHS under license with IEEE
No reproduction or networking permitted without license from IHS
Not for Resale

6.7.3 Mounting and grounding of device

The tests specified shall be performed with the current-limiting fuse or FEP mounted in a manner that will simulate the service conditions specified by the supplier of the FEP. Liquid-immersible fuses may be tested in either air or liquid at the discretion of the manufacturer.

6.7.4 Test series for FEPs

Interrupting tests shall be performed in accordance with 6.6, test Series 2 and 3, with the following exceptions and addition. Series 2 shall be the same as specified in 6.6. Series 3 shall be the same as specified in 6.6, except as follows:

a) The test current for an FEP using a general purpose fuse shall cause fuse melting in not less than 1 h. For tests at rated maximum application temperature (maximum reference ambient temperature), this current may require derating. Refer to IEEE Std C37.48-1997 for further information.

b) The test current for an FEP using a backup type fuse shall be the rated minimum interrupting current of the fuse.

c) The test current for an FEP using a full-range current-limiting fuse shall be the minimum test current determined in 6.6.3.1.

6.7.5 Overvoltages for current-limiting fuses in enclosures

Overvoltages produced during the Series 2 interrupting tests specified in 6.6.1 shall be recorded by a cathode-ray oscillograph or other instrument having a frequency response greater than that of the waveforms being measured.

6.8 Description of interrupting tests for FEPs using liquid-submerged, expulsion type indoor power class fuses

6.8.1 Applicable devices

Subclause 6.8 applies to expulsion fuses that are immersed in liquid and used in switchgear (not directly associated with transformers). It is intended to provide testing requirements for such fuses in an enclosure. It is not intended to apply to distribution oil cutouts, which are devices covered in 6.3 and by ANSI C37.44-1981. (See 1.2, Type 3E, for a description of the FEP covered by this subclause.)

6.8.2 Grounding

The enclosure shall be grounded as specified by the manufacturer.

6.8.3 Liquid

The enclosure shall be filled with insulating liquid(s) as specified by the manufacturer. When testing liquid-submerged fuses to verify their ratings, the liquid shall not be changed or reconditioned during the tests.

6.8.4 Condition of the device

Where parts of a tested assembly are reusable, the manufacturer’s guidelines should be followed regarding the number and type of tests. All specified cleaning, inspection, and maintenance steps recommended by the manufacturer shall be followed.

Copyright © 2000 IEEE. All rights reserved.

Copyright The Institute of Electrical and Electronics Engineers, Inc.
Provided by IHS under license with IEEE
No reproduction or networking permitted without license from IHS Not for Resale

6.8.5 Mounting of device

The tests specified shall be performed with the device mounted in a manner that will simulate the normal service conditions specified by the manufacturer. Liquid-submerged expulsion fuses are sometimes used in series with current-limiting fuses. Since the objective of these tests is to determine the performance of only the expulsion fuses, these tests should be performed without the current-limiting fuse in series. The mounting of these type devices should simulate their normal mounting position and structure.

6.8.6 Test circuit and test series

Tests for liquid-submerged expulsion fuses used in enclosures shall be made in accordance with Table 13. A description of the two series of tests required is as follows:

— *Series 1:* Verification of operation with available currents equal to the rated interrupting current of the expulsion fuse.

— *Series 2:* Verification of operation with small overload currents.

6.9 Description of interrupting tests for air-insulated FEPs using expulsion type indoor power class fuses

6.9.1 Use of expulsion fuses in enclosures

The installation of a fuse, or fuse and container combination (F/C), in an enclosure results in a total system that shall have performance capabilities suitable for the application intended. Expulsion fuses intended for this application shall comply with the interrupting tests specified in 6.9 and the applicable tests specified in 6.5.

When expulsion fuses are applied in enclosures of any type, the performance characteristics of the total system shall be evaluated. The following tests reflect this basic requirement. See 1.2, Types 1E and 2E, for descriptions of the devices covered. The following tests, beyond those specified in 6.5, are conducted to:

a) Verify that the enclosure containing the fuse or F/C does not adversely affect proper performance and servicing of the fuse or F/C.

b) Verify that the operation of the fuse or F/C in an enclosure does not adversely affect the mechanical and dielectric integrity of the enclosure.

6.9.2 Test site conditions

Normal ambient temperature conditions may prevail when testing a fuse or F/C having a rated maximum application temperature no higher than 55 °C. However, if the rated maximum application temperature is higher than 55 °C, testing shall be performed with the fuse or F/C in its rated maximum application temperature.

In all cases, the device shall be stabilized at the referenced ambient temperature before the test current is applied to the fuse.

a) For Type 1E fuses, the rated maximum application temperature is the air temperature inside the enclosure.

b) For Type 2E fuses, the rated maximum application temperature is that of the air outside the container.

--`,,`-`-`,,`,,`,`,,`---

Copyright © 2000 IEEE. All rights reserved.
Copyright The Institute of Electrical and Electronics Engineers, Inc.
Provided by IHS under license with IEEE
No reproduction or networking permitted without license from IHS
Not for Resale

6.9.3 Mounting and grounding of device for test

The fuse or F/C shall be mounted in the enclosure in its normal service position. The fuse or F/C manufacturer's guidelines for installation in an enclosure should be followed. These guidelines should present information on the minimum required electrical clearances and the minimum construction requirements for the enclosure. All conducting parts of the enclosure shall be grounded.

6.9.4 Test series

6.9.4.1 Single-phase devices

For fuses or F/Cs that are applied to protect only single-phase circuits, single-phase interrupting tests shall be performed. A three-phase test is an acceptable alternative. Using a fuse link or fuse unit having a current rating between 20 A and 50 A, the three tests of Table 9, Power Fuses, Test Series 1, shall be performed on a single fuse or F/C. However, the single-phase circuit voltage shall be equal to the single-phase voltage rating of the switchgear, and the TRV frequency and peak factor shall be appropriate for rated maximum line-to-line voltage.

Use of a fuse current rating between 20 A and 50 A will result in a duty-severity representative of, or exceeding that which will result when, using current ratings of a larger size.

6.9.4.2 Three-phase devices

For fuses or F/Cs that are applied to protect three-phase circuits, a three-phase interrupting test is required. In a three-phase circuit with voltage equal to the maximum rated voltage of the fuse or F/C, and with either the neutral of the source grounded or the three-phase fault point grounded, but not both, a current equal to the maximum symmetrical interrupting rating of the fuse or F/C shall be applied. Fuse links or fuse units having a current rating between 20 A and 50 A shall be used. The current-making angle shall be such as to produce a current of maximum asymmetry in at least one of the phases. The circuit X/R and inherent transient recovery voltage conditions specified in Table 9, Power Fuses, Test Series 1, with peak factor based upon 0.87 three-phase test voltage, shall prevail across the first phase to clear. TRV control elements may be selected by:

a) Using an ideal interrupting device to interrupt the three-phase circuit, or

b) Current-injecting one open phase while the other two phases are closed.

6.9.5 Acceptance criteria

The condition of the device after interrupting tests shall conform to 4.4, and the enclosure shall be as follows.

The enclosure shall be capable of withstanding the forces resulting from the operation of the fuse or F/C. There shall be no operation-impairing deformation to, or effect upon, the enclosure and its doors, latches, and interlocks (if present), nor shall any internal components be affected, except the fuse and exhaust control device.

6.10 Description of interrupting tests for external fuses for shunt capacitors

Depending on the applications intended for the device, the interrupting tests specified in Table 14 shall be made on the device. These tests shall be performed as specified in 6.10.2, 6.10.3, and 6.10.4 and the referenced tables. For all interrupting tests, records of source voltage, fuse voltage, and current through the fuse shall be obtained. Instrumentation should be adequate such that the high frequencies involved during the interrupting process are accurately recorded. The metering instrumentation used should not significantly affect the recovery voltage. Appropriate metering methods will allow convenient determination, when

Copyright © 2000 IEEE. All rights reserved.

Copyright The Institute of Electrical and Electronics Engineers, Inc.
Provided by IHS under license with IEEE
No reproduction or networking permitted without license from IHS Not for Resale

required, of performance parameters such as peak overvoltage, arc energy, recovery voltage, peak let-through current, and I^2t.

6.10.1 Determination of available short-circuit current

Determination of available short-circuit current of the test circuits shall be as specified in 6.1.1.2 and 6.10.3.

6.10.2 Interrupting tests—inductive currents

All capacitor fuses that are rated for interrupting inductive currents shall be tested for inductive fault current interrupting performance as follows:

Capacitor line fuse	Table number and test series
Power fuses (except current-limiting)	Table 9: Series 1, 2, 3, and 4
Single-voltage-rated distribution cutouts	Table 5: Series: 1, 2, and 3
Slant-voltage-rated distribution cutouts	Table 6: Series 1, 2, 3, and 6
Current-limiting power and distribution fuses	Table 12: Series 1 and 2
Capacitor unit fuse	
All capacitor unit fuses (except current-limiting)	Table 9: Series 1, 2, 3, and 4 or Table 5: Series 1, 2, and 3
Current-limiting capacitor unit fuse	Table 12: Series 1 and 2

For the inductive current interrupting tests for capacitor unit fuses, a capacitor shall be placed in parallel with the fuse under test. This parallel capacitor shall be sized to draw a current at the test voltage of between 25% and 75% of the allowable continuous current of the fuse under test. The transient recovery voltage requirements of Table 5, Table 9, and Table 12 do not apply to the tests on capacitor unit fuses when parallel capacitors are used in the test circuit.

Capacitor unit fuses that have met the interrupting requirements when tested without parallel capacitors need not be retested with parallel capacitors in the test circuit.

Examples of applications where inductive currents can flow are as follows:

a) Capacitor line fuses

b) Capacitor unit fuses in delta-connected banks without capacitor units in series

c) Capacitor unit fuses in wye-connected banks, without capacitor units in series, and with the neutral or the frame grounded

d) Capacitor line and capacitor unit fuses, without capacitor units in series, used on single-phase circuits

6.10.3 Interrupting tests—power-frequency capacitive currents

All fuses applied to protect capacitors can be called upon to interrupt power-frequency capacitive currents. Tests shall be made in accordance with Table 15 and shall consist of the following test series:

Copyright © 2000 IEEE. All rights reserved.
Copyright The Institute of Electrical and Electronics Engineers, Inc.
Provided by IHS under license with IEEE
No reproduction or networking permitted without license from IHS
Not for Resale

Test type	For capacitor unit fuses	For capacitor line fuses
Verification of the operation with available current equal to rated maximum capacitive interrupting current at rated maximum voltage.	Series 1	Series 3
Verification of the operation with available currents equal to rated minimum capacitive interrupting current at rated maximum voltage. This duty simulates progressive elements (pack) failure in a capacitor unit.	Series 2	Series 4

Examples of conditions where capacitive overcurrents can occur are as follows:

a) Partial capacitor failure for those applications listed in 6.10.2

b) Capacitor unit or capacitor line fuses in wye-connected banks with an ungrounded neutral

c) Banks with capacitor units in series

The test circuits and equipment arrangement for capacitive current interrupting tests should be as follows:

— The circuit elements used to control the test circuit's short-circuit current and *X*/*R* ratio, to the requirements specified in Table 15 and Table 16, shall be in series with each other and the test specimen.

— The test circuit's source short-circuit current shall be measured per 6.1.1.2, except all circuit capacitive loading shall also be short-circuited for this measurement.

— The test circuit's capacitive current shall be controlled by capacitor units connected in series with the test specimen and with the test circuit's short-circuit control loading.

— The waveform of the current to be interrupted should, as nearly as possible, be sinusoidal. This condition is considered to be complied with if the ratio of the rms value of the current to the rms value of the fundamental component does not exceed 1.2.

6.10.4 Interrupting tests—capacitor discharge

This test verifies the maximum parallel stored energy where the capacitor unit fuse will operate successfully. After the circuit interrupting operation, the components of the fuse (except for those intended for field replacement) shall be substantially in the same condition as they were prior to the test. Erosion of the bore of the fuse tubes of expulsion fuses is acceptable. Flashover to ground or adjacent fuses, emission of flame or filler material from current-limiting fuses, or bursting of any parts is not acceptable. A minor spark or flame from an indicating device is acceptable.

The test circuit for capacitor discharge current interrupting tests shall be as follows:

a) The capacitance of the test circuit shall be such that the stored energy (joules) in the capacitor(s) has the specified value at the test voltages specified below.

The capacitor(s) shall be charged by means of dc to one of the following voltages:

$1.00(+10\% - 0\%)V_f\sqrt{2}$ for expulsion fuses

$2.00(+10\% - 0\%)V_f\sqrt{2}$ for current-limiting fuses

Copyright © 2000 IEEE. All rights reserved.

Copyright The Institute of Electrical and Electronics Engineers, Inc.
Provided by IHS under license with IEEE
No reproduction or networking permitted without license from IHS
Not for Resale

where

V_f is the rated maximum voltage of the fuse in rms volts.

At the manufacturer's option, if the required energy cannot be achieved with the capacitors available, the charge voltage may be increased as necessary above the 10% allowed.

b) If an unlimited "joule rating" is claimed for the fuse, the charge voltage may be increased such that at the instant of interruption, the voltage remaining on the bank shall not be less than

$$2.0 V_f \sqrt{2}$$

where

V_f is the rated maximum voltage of the fuse in rms volts

c) The oscillatory frequency of the test circuit shall not be less than

$$F = 0.8 V_f$$

where

F is the frequency (hertz),
V_f is the rated maximum voltage of the fuse (rms volts).

No additional inductance shall be added to the test circuit. If the test circuit conditions do not permit the required discharge frequency to be obtained, then the actual discharge frequency recorded during the tests shall be specified along with the maximum stored energy (joules) rating when it is published or when the rating information is disseminated.

d) The ratio between successive current peaks (reversal) shall be between 0.8 and 0.95. This requirement shall be determined by replacing the fuse with a shorting link of negligible impedance compared with that of the test circuit. This calibration test may be made at a reduced voltage.

e) For fuses that do not provide an automatic isolating gap after operation, the voltage trapped on the capacitors shall be left on the fuse for a minimum of 10 min after the fuse operates. This may require that the capacitors used in the test circuit be without discharge resistors.

The test procedures for capacitor discharge current interrupting tests shall be as follows:

— For current-limiting fuses belonging to a homogeneous series per 6.6.4, the fuse with the smallest current rating in that particular series, and the fuse with the largest current rating in that series, shall be tested. Any current rating of fuses within this series shall be deemed to comply with the interrupting requirements of this standard if these units operate satisfactorily. If a fuse does not perform satisfactorily, it may be rejected from the homogeneous series and a new series should be selected.

For expulsion type fuses, the tests should be made on all fuse types where the bore of the fuse tube and/or its length changes, and on any fuses where the materials of the fuse tube are different from other tested devices. For fuses that use replaceable links, the tests should be made with the smallest and the largest link that is intended to be used in the particular fuse holder. A 6 A type K link may be used for the minimum size requirement.

— Two tests are to be made on each size fuse. For expulsion type fuses, a complete new fuse shall be used for the second test.

Copyright © 2000 IEEE. All rights reserved.
Copyright The Institute of Electrical and Electronics Engineers, Inc.
Provided by IHS under license with IEEE
No reproduction or networking permitted without license from IHS
Not for Resale

— The residual voltage across the capacitor(s) shall be measured immediately after discharge to determine the amount of energy dissipated in the fuse and the circuit resistance. This residual voltage shall be recorded in the test report.

— The “joule rating” that may be assigned to the fuse being tested is the energy stored in the capacitor test bank prior to the time it is discharged through the fuse.

6.10.5 Criteria for successful interruption tests

a) Flashover to ground or adjacent components shall not occur during operation when the fuse is mounted in accordance with manufacturer's recommendations and per 4.6.7.

b) Following the interruption of the test current, the fuse shall be capable of withstanding the recovery voltage of the test circuit, which may be as high as

$$2 \times \sqrt{2} \times V_f$$

where

V_f is the rated maximum voltage of the fuse (rms volts).

c) After the fuse has operated, the components of the fuse (apart from those intended to be replaced after each operation) shall be in substantially the same condition as at the beginning of the test, except for erosion of the bore of the fuse tube of expulsion fuses. After completion of the interrupting discharge tests, however, the components of the fuse may be damaged and require replacement to restore the fuse to its operating condition.

7. Load-break tests

7.1 Procedures common to all load-break tests

Devices, unless they incorporate a load-breaking means, have no load-break rating. Load-break test procedures for devices with load-breaking equipment shall be as specified in Clause 4 and in Clause 7.

7.1.1 Mounting of device

The device shall be mounted in all positions for which it is designed or for which it is recommended for load-break operation.

7.1.2 Test circuit

7.1.2.1 Test circuit power factor

The power factor of the test circuit shall be between 70% and 80% for lagging power factor tests, and between 0% and 10% for leading power factor tests. If test laboratory limitations or special applications require a more severe test circuit, the lagging power factor may be reduced to less than 70% upon agreement with the device’s manufacturer. In special applications, the allowable limits for tests shall be as agreed upon by the manufacturer and the user.

Copyright © 2000 IEEE. All rights reserved.

Copyright The Institute of Electrical and Electronics Engineers, Inc.
Provided by IHS under license with IEEE
No reproduction or networking permitted without license from IHS Not for Resale

7.1.2.2 Test circuit impedance

The circuit impedance, Z, shall consist of two components connected in series. The first component shall not be less than 10% or more than 20% of the total impedance of the test circuit, and shall have an *X*/*R* ratio of 2 or more. This circuit component shall have its inductive and resistive elements in series relationship. The second component for lagging power factor tests shall consist of inductance and resistance in parallel relationship (see Figure 2). The second component for leading power factor tests shall consist of capacitance alone. When tests are made line-to-ground, at least the second component of impedance shall be on the load-side of the device.

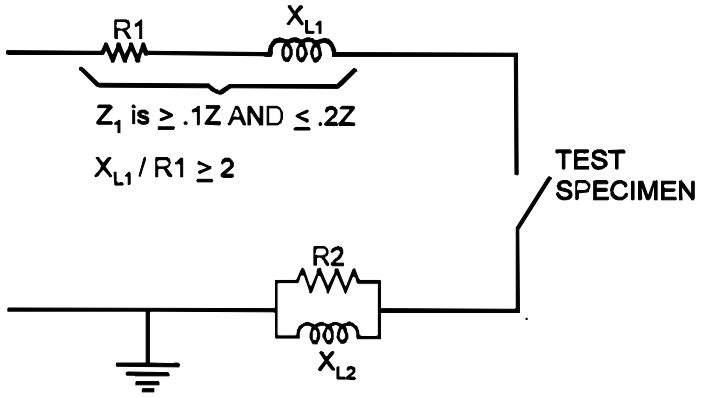

Z is the total circuit impedance

(a) Typical lagging power factor test circuit

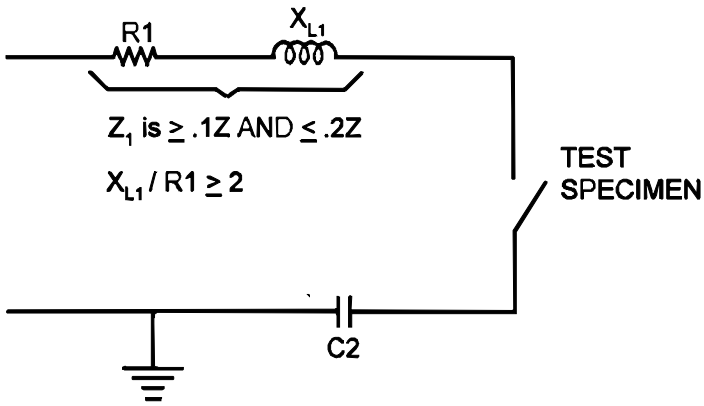

Z is the total circuit impedance

(b) Typical leading power factor test circuit

Figure 2—Test circuit for load-break tests

Copyright © 2000 IEEE. All rights reserved.
Copyright The Institute of Electrical and Electronics Engineers, Inc.
Provided by IHS under license with IEEE
No reproduction or networking permitted without license from IHS
Not for Resale

7.1.2.3 Test circuit capacitance

The total shunt capacitance of the test circuit (measured across the open switch) when breaking inductive loads shall not exceed the following.

Test voltage (kV)	Maximum capacitance (μF)
2.6	0.003
5.2	0.066
7.8	0.10
15.0	0.20
18.0	0.20
27.0	0.35
38.0	0.40
NOTE—These values apply only to devices designed for use on distribution circuits.	

7.1.2.4 Power-frequency recovery voltage

The power-frequency recovery voltage across the terminals of the device shall be the rated maximum voltage of the device.

7.1.3 Measurement of test values

7.1.3.1 Measurement of test current

The current interrupted shall be the rms symmetrical current measured from the envelope of the wave at the start of arcing.

7.1.3.2 Calculation of test current and recovery voltage

The rms alternating test current and recovery voltage shall be determined. This may be accomplished by following the methods described in Annex A.

7.1.4 Acceptance criteria

There shall be no failure to interrupt the circuit for any test condition, fuse link rating, and mounting position. Tests shall be made under a sufficient number of conditions to ensure meeting the requirements specified for the device or mechanism undergoing test.

The condition of the device at the conclusion of any series of five load-break operations for distribution enclosed, open, or open-link cutouts, or the duty cycle for distribution oil cutouts, the device and the load-break mechanism, after renewing the fuse link if destroyed in the normal load-break operation, shall be as specified in 4.4.

--`,,`-`-`,,`,,`,`,,`---
Copyright © 2000 IEEE. All rights reserved.

Copyright The Institute of Electrical and Electronics Engineers, Inc.
Provided by IHS under license with IEEE
No reproduction or networking permitted without license from IHS Not for Resale

7.2 Description of load-break tests for all fused devices except distribution class oil cutouts

Load-break tests shall be conducted as follows.

One or more devices with means for interrupting load currents, or one or more load-break mechanisms properly assembled on devices of the rating and type recommended by the manufacturer, shall be opened manually or automatically, at an equivalent speed, when carrying the specified load current. The test shall be repeated five times with an interval between tests of not less than 3 min.

7.3 Description of load-break tests for distribution class oil cutouts

Tests on distribution class oil cutouts shall be as specified in 4.3 of ANSI C37.44-1981.

8. Making-current tests (distribution class oil cutouts)

8.1 Procedures common to all making-current tests for distribution class oil cutouts

The rated making current for distribution class oil cutouts shall be the same value as the rated interrupting current specified. Making-current test procedures shall be as specified in Clause 4 and in Clause 8.

8.1.1 Test circuit

8.1.1.1 Test circuit configuration

The making-current test shall be performed using a single-phase alternating-current circuit. The circuit elements used to control the current and the *X*/*R* ratio shall be in series with each other and the cutout. The testing circuit frequency shall be the rated frequency, with a tolerance of ±2 Hz. If 60 Hz test facilities are not available, testing at (50 ± 2) Hz is acceptable for verifying 60 Hz ratings.

The test circuit shall provide a symmetrical short-circuit current that is equal to or greater than the making-current rating for the device. Also, the asymmetrical current shall be equal to or greater than the asymmetrical current associated with the symmetrical current and the *X*/*R* ratio specified (see Figure C.1). The *X*/*R* ratio of the test circuit shall not be less than the values specified in Table 4. If tests are made at an *X*/*R* ratio higher than specified, then the test duty may be more severe, because the prospective asymmetrical current will be equal to or greater than the asymmetrical current associated with the symmetrical current and the specified *X*/*R*. It is not permissible to decrease the prospective symmetrical current to achieve the proper asymmetrical current.

The power-frequency voltage for the test shall be the rated maximum voltage of the device +5%, –0%.

8.1.1.2 Determination of the X/R ratio and the prospective (available) short-circuit current of the test circuit

The device to be tested shall be replaced in the test circuit with a connection having negligible impedance. The *X*/*R* ratio and both the prospective symmetrical and asymmetrical short-circuit currents shall be determined as follows.

To determine the symmetrical short-circuit current, power shall be applied at the point on the voltage wave that minimizes the offset in the first loop (i.e., power should be applied at an angle approximately equal to the value of the arctan [*X*/*R*] with respect to voltage zero, where *X*/*R* is the estimated *X*/*R* ratio of the test circuit).

--`,,`-`-`,,`,,`,`,,`---

Copyright © 2000 IEEE. All rights reserved.
Copyright The Institute of Electrical and Electronics Engineers, Inc.
Provided by IHS under license with IEEE
No reproduction or networking permitted without license from IHS
Not for Resale

The symmetrical current may be calculated in accordance with Figure A.1. The rms current should be measured during the first cycle of current.

To determine the rms asymmetrical short-circuit current, the power shall be applied at the point on the voltage wave (i.e., near a voltage zero) that produces maximum offset in the first current loop. The rms total asymmetrical current, including the direct-current component as measured at the time of the first major peak, may be determined in accordance with Figure A.2.

Determination of the test-circuit symmetrical current may be combined with asymmetrical current determination, provided the circuit current is of sufficiently long duration so that the symmetrical current component, as determined using Figure A.1, has achieved a steady-state value (i.e., the symmetrical current value is constant between cycles).

After the symmetrical and asymmetrical short-circuit current values are obtained, the *X*/*R* ratio of the test circuit may be determined by calculating the ratio of the rms asymmetrical current to the rms symmetrical current component (see Figure C.1).

8.2 Description of making-current tests for distribution class oil cutouts

8.2.1 Test series

The cutout shall be tested in the circuit described in 8.1.1 with the negligible impedance connection removed.

8.2.1.1 Number of tests

The test shall be made on one sample.

8.2.1.2 Size of fuse link

The tests shall be performed with a fuse link having a rating equal to the maximum rating specified, and of a type recommended, by the manufacturer.

8.2.2 Acceptance criteria

The device shall perform successfully under identical conditions to those described in 8.1.1.2 when the circuit is closed by quickly moving the cutout contacts from the open to the closed position. Since circuit-close timing is not controlled in this test, maximum offset in the first loop of current may be different from that obtained in 8.1.1.2.

After successful completion of the tests, the condition of the device shall be as specified in 4.4, except the contacts may require inspection, repair, or replacement.

9. Radio-influence tests

9.1 Procedures common to all radio-influence tests

Radio-influence test procedures shall be as specified in Clause 4 and in Clause 9.

Copyright © 2000 IEEE. All rights reserved.

Copyright The Institute of Electrical and Electronics Engineers, Inc.
Provided by IHS under license with IEEE
No reproduction or networking permitted without license from IHS Not for Resale

9.1.1 Test site conditions

9.1.1.1 Ambient humidity and air density during test

Tests shall be conducted under atmospheric conditions prevailing at the time and place of the test; it is recommended, however, that tests be avoided when the vapor pressure of moisture in the atmosphere is below 50 Pa (0.2 in Hg) or exceeds 150 Pa (0.6 in Hg). Since the effects of humidity and air density upon radio-influence voltage are not definitely known, correction factors are not recommended at the present time. It is recommended, however, that the barometric pressure and dry and wet bulb thermometer readings be recorded so that, if suitable correction factors should be determined, they can be applied to previous measurements.

9.1.1.2 Ambient radio-influence noise during test

Tests may be made under the conditions prevailing at the time and place of the test. It is recommended, however, that tests be avoided when the ambient radio-influence voltage (including the influence voltage of irrelevant electrical devices with the device under test disconnected from the test equipment) exceeds 25% of the radio-influence voltage of the device to be tested.

9.1.1.3 Tests on liquid-immersed devices

The tanks of liquid-immersed apparatus shall be filled with the specified amount of liquid.

9.1.2 Proximity of other objects during test

No other grounded or ungrounded object or structure (except a mounting structure when required) shall be in closer proximity to any part of the device undergoing test than three times the longest overall dimension of the device, with a minimum permitted spacing of 0.9 m (3 ft). Where space limitations under test conditions do not permit the above clearance to be maintained, the test will be considered valid if the limits of radio-influence voltage obtained are equal to or less than those specified for the device. In such cases, it is desirable that a record be made of the object, structures, etc., as well as their distances from the device under test. These data may be useful for future use in determining proximity effect.

9.1.3 Test conductor arrangement

The conductors shall be arranged as specified in 4.5.2. The free end of all conductors shall be terminated in a sphere having a minimum diameter of twice the diameter of the conductor, or shall be shielded in some other suitable manner to eliminate the effect of the end of the conductor as a source of radio-influence voltage.

9.1.4 Measurement of test values

9.1.4.1 Measurement equipment for test

The meter used for making radio-influence measurements shall be in accordance with ANSI C63.2-1987.

9.1.4.2 Measurement of test voltage impulses with low repetition rates

When making measurements on radio-influence voltage impulses with repetition rates so low that meter fluctuation makes reading of either the minimum or maximum pointer deflection doubtful, the slow-speed indicating output meter listed in 16.2 of ANSI C63.2-1987 shall be used. The highest pointer deflection of the meter during a 15 s interval of observation shall be recorded as the radio-influence voltage, so that differences between various operators in recorded results for noise sources with low repetition rates may be minimized.

Copyright © 2000 IEEE. All rights reserved.
Copyright The Institute of Electrical and Electronics Engineers, Inc.
Provided by IHS under license with IEEE
No reproduction or networking permitted without license from IHS
Not for Resale

9.1.4.3 Test instrument calibration

Calibrations and adjustments of the radio-noise meter shall be made as specified in the instruction manual for the radio-noise meter.

9.1.4.4 Test instrument settings

The detector function selector switch shall be set to the quasi-peak position on the radio-noise meter.

9.1.4.5 Characterization of radio-influence voltage during test

When it is desired to identify the character of the radio-influence voltage, measurements should be monitored using either a headset, loudspeaker, or oscilloscope. Precautions should be taken to determine whether or not these devices affect the radio-noise meter indications during measurements.

9.1.4.6 Precautions in taking test measurements

The following precautions shall be observed when making radio-influence tests:

a) The device shall be at approximately the same temperature as the room in which the test is performed. It shall be dry and clean, and shall not have been subjected to dielectric tests within 2 h prior to the radio-influence test.

b) In some cases, it may be found that the radio-influence voltage falls off rapidly after the rated-frequency voltage has been applied for a short time. In such cases, it is permissible to re-excite the test piece at normal operating voltage for a period not to exceed 5 min before proceeding with the tests.

9.1.5 Acceptance criteria

The radio-influence voltage measured in the test is the total ionization voltage at the terminals of the device. Since this is conducted radio-influence voltage, the permissible maximum values specified for the device in the appropriate standard (see Clause 3) will add a negligible amount to the radio-influence radiated from an otherwise normal line to which the device is connected, even at short distances from the device.

9.2 Description of radio-influence tests on a single device

Tests at 1 MHz shall be made on the device with the fuse unit or fuse holder, including the conducting element (fuse link) or disconnecting switch blade, in the closed and open positions. When a test is made in the open position, the pole or group of poles not connected to the influence-measuring equipment shall be grounded and ungrounded, and the radio-influence voltage determined for each condition.

9.3 Description of radio-influence tests on multiple devices

In the case of multiple devices, one pole or terminal (or groups of the same) may be tested at a time following the procedures specified in 9.2.

9.4 Description of radio-influence tests for assembled apparatus

In the case of assembled apparatus, the test shall be made without removing any component part, and the test voltage shall be based on the lowest rated voltage of any component part. The limiting radio-influence volt-

Copyright © 2000 IEEE. All rights reserved.

Copyright The Institute of Electrical and Electronics Engineers, Inc.
Provided by IHS under license with IEEE
No reproduction or networking permitted without license from IHS
Not for Resale

age shall be identical to the highest value specified for any of the component parts that determine the test voltage.

10. Short-time current tests

Short-time current test procedures shall be as specified in Clause 4 and in Clause 10.

10.1 Mounting and grounding of device for test

Only one position for mounting distribution cutouts and distribution-enclosed single-pole air switches is necessary. Grounding of the hanger of distribution-enclosed or open cutouts and distribution-enclosed single-pole air switches is not necessary.

10.2 Test connections

The device shall have a bare conductor connected to each terminal that has the size and minimum length specified in Table 17. The conductors shall leave the terminals in substantially a straight line, parallel to the blade of the device. The minimum unsupported length of these conductors shall be the open-gap distance of the device.

10.3 Test circuit ratio

10.3.1 Test circuit configuration

Short-time tests shall be made using a single-phase alternating current circuit. The circuit elements used to control the current and *X*/*R* ratio shall be in series with each other and with the device being tested. The test circuit frequency shall be the rated frequency of the device ± 2 Hz. If 60 Hz test facilities are not available, tests at (50 ± 2) Hz are acceptable for verifying 60 Hz ratings.

10.3.2 Test circuit voltage

The test circuit voltage may be any convenient voltage that is capable of supplying the required test currents.

10.3.3 Test circuit X/R ratio

The test circuit *X*/*R* ratio may be any convenient value for 15-cycle and 3 s tests. Exceptions occur when the momentary and the 15-cycle or 3 s requirements are being performed at the same time or with the same circuit. In these cases, the two duties required will be met if the *X*/*R* ratio is a value that will provide the rated momentary current specified in 10.4, and the rated 15-cycle or 3 s currents specified in 10.5 or 10.6. The *X*/*R* ratio for momentary tests shall be as specified in the specification standard for the device being tested.

Testing with a test circuit *X*/*R* ratio other than the one specified above is acceptable when both the first and second major current peaks meet or exceed the first and second major current peaks associated with the specified momentary current. Testing with either a lower or higher *X*/*R* ratio may result in a more severe test. A higher value may result in a larger second major current peak to achieve the required first major current peak. A lower *X*/*R* ratio may result in a larger first major current peak to achieve the required second major current peak. A lower *X*/*R* value may also shorten the time of the first and second major current loops, which could lessen the test severity. Testing by persons other than the manufacturer shall be made with the *X*/*R* ratios specified, or permission to test using another value shall be obtained from the manufacturer of the device. Table 18 lists the first and second major current peaks associated with the specific momentary currents and *X*/*R* ratios.

Copyright © 2000 IEEE. All rights reserved.
Copyright The Institute of Electrical and Electronics Engineers, Inc.
Provided by IHS under license with IEEE
No reproduction or networking permitted without license from IHS
Not for Resale

10.3.4 Making angle

When conducting the 15-cycle and 3 s tests separately from the momentary test, the power is applied at the point on the voltage wave that minimizes offset in the first loop of current.

For the momentary test, and for the 15-cycle or 3 s test when combined with the momentary test, the power shall be applied at the point on the voltage wave that produces the required first and second major current peaks.

10.3.5 Determination of short-time current

During testing of the circuit or the device, the currents involved shall be measured as follows.

For momentary tests, the current peak of the first two major current loops shall be determined. This may be accomplished by following the A measurement method, as shown in Figure A.2.

For 15-cycle and 3 s tests, the symmetrical current shall be determined. This may be accomplished by following the method shown in Figure A.1.

For 3 s tests, the current value may be determined with an ammeter if the circuit characteristics are such that there is no decay in the current values after any initial transient. If current decay does occur, an oscillograph or equivalent metering methods should be used to determine the true rms current.

10.3.6 Determination of the circuit current

Prior to testing of the device, the circuit may be checked (if desired) for correctness and capability by using a reduced voltage check test or, in some cases, a reduced time check test. Normal ratio methods and engineering judgment are used to determine the voltage required for the device test. If the device has negligible impedance, another check method is to replace the properly connected device in the test circuit with a connection having a negligible impedance. If an alternate connection was used to check the circuit, remove it before testing the device.

10.4 Description of momentary current tests

One sample of the device shall be tested in the circuit described in 10.3. The current shall be maintained for a minimum of three cycles.

The rated momentary current is achieved when both the first and second major current peaks meet or exceed the first and second major current peaks specified for the momentary current and X/R ratio listed in Table 18. Momentary tests may be combined with the 15-cycle test or, in some cases, with the 3 s tests. When this is done, the circuit shall be closed at the point on the voltage wave that will provide the required momentary current. The preferred values of rated momentary currents are specified in the specification standard for the device.

10.5 Description of 15-cycle current tests

One sample of the device shall be tested in the circuit described in 10.3 The test rms symmetrical current shall be at least the rated 15-cycle current value during the test, with the final measurement taken at the end of the 15 cycles. The preferred values of the rated 15-cycle currents are specified in the specification standard for the device.

NOTE—See 10.3.3 and 10.3.4 for X/R ratio and making angle if the 15-cycle and momentary tests are being combined.

Copyright © 2000 IEEE. All rights reserved.

Copyright The Institute of Electrical and Electronics Engineers, Inc.
Provided by IHS under license with IEEE
No reproduction or networking permitted without license from IHS Not for Resale

10.6 Description of 3 s current tests

One sample of the device shall be tested in the circuit described in 10.3. If the integrated heating equivalent of the 3 s rating has been obtained, the device shall be considered to have been properly tested. The tests may also be conducted at a reduced current if the integrated heating equivalent of the 3 s rating is obtained in a time period not exceeding 8 s. The preferred values of the rated 3 s currents are specified in the specification standard for the device.

NOTE—See 10.3.3 and 10.3.4 for X/R ratio and making angle if the 3 s and momentary tests are being combined.

10.7 Acceptance criteria

After successful completion of the tests, the condition of the device shall be as specified in 4.4, except the tests may have resulted in some visual evidence of the device having passed current, such as slight contact markings. If this occurs, ratings shall be considered met when the device will withstand repeated mechanical operations without cumulative damage and is capable of carrying its rated continuous current as specified in 4.4.

11. Temperature-rise tests

11.1 Procedures common to all temperature-rise tests

Temperature-rise tests shall be as specified in Clause 4 and in Clause 11.

11.1.1 Test site conditions

The device shall be mounted in a closed room substantially free from air currents other than those generated by heat from the device being tested. The ambient temperature shall be taken as that of the surrounding air, which should not be less than 10 °C and not more than 40 °C. Corrections shall not be applied to any ambient temperature within this range. The ambient temperature shall be determined by taking the average of the readings of three thermocouples (or thermometers) placed as follows:

a) One 30 cm (12 in) above the device

b) One 30 cm (12 in) below the device 30 cm (12 in) above the floor, and 30 cm (12 in) to the side of the floor-mounted apparatus

c) One midway between the above two positions and 30 cm (12 in) from the side of the device

NOTE—For small devices, such as distribution cutouts or distribution-enclosed single-pole air switches, one thermocouple (or thermometer) at location c) is sufficient.

11.1.2 Mounting and grounding of device

Grounding of the mounting bracket or base as specified in 4.6 is not required.

11.1.3 Measurement of test values

11.1.3.1 Method of determining temperature during test

The temperature of a device shall be determined by thermocouples, or mercury or alcohol thermometers. Any of these instruments shall be applied to the hottest parts of the device, excepting the conducting element of a fuse, while maintaining all parts in normal operating condition.

Copyright © 2000 IEEE. All rights reserved.
Copyright The Institute of Electrical and Electronics Engineers, Inc.
Provided by IHS under license with IEEE
No reproduction or networking permitted without license from IHS
Not for Resale

11.1.3.2 Use of oil cups

In order to avoid errors due to the time lag between the temperature of large devices or apparatus and the variation of ambient temperature, all reasonable precautions must be taken to reduce these variations and the errors arising from them. Thus, when the ambient temperature is subject to such variations that error in the temperature rise might result, the thermocouples (or thermometers) for determining the ambient temperature should be immersed in a suitable liquid such as oil, in suitably heavy metal cups, or should be attached to suitable masses of metal. A convenient form for such an oil cup consists of a metal cylinder with a hole drilled partly through it. This hole is filled with oil, and the thermocouple (or thermometer with its bulb) is placed therein so it is well immersed. The response of the thermocouple (or thermometer) to various rates of temperature change will depend largely on the size, kind of material, and mass of the containing cup, and may be further regulated by adjusting the amount of oil in the cup. The larger the apparatus under test, the larger should be the metal cylinder used as an oil cup in determining the ambient temperature. The smallest size of the oil cup employed in any case shall consist of a metal cylinder with 25 mm (1 in) diameter and 50 mm (2 in) height.

11.1.3.3 Use of thermometers

If thermometers are used for taking temperatures, the bulbs of thermometers shall be covered by felt pads cemented to the apparatus, by oil putty, or by cotton waste. Dimensions of felt pads for use with large apparatus shall be $40 \times 50 \times 3$ mm thick ($1^1/_2 \times 2 \times {}^1/_8$ in thick). The use of smaller pads is permissible on small devices.

11.2 Description of temperature-rise tests (except on distribution oil cutouts)

The test current shall be applied continuously until three consecutive temperature readings taken at 30 min intervals show a maximum variation of 1 °C in the temperature rise above ambient.

11.3 Description of temperature-rise tests for air-insulated FEPs using expulsion type indoor power class fuses

Additional rated continuous current testing shall be conducted, as specified in 5.2.2 of IEEE Std C37.20.3-1987, using fuse links or fuse units of the maximum current rating permitted by the rating of the mounting. Connecting conductors and temperature limits for buses and connections shall be the same as specified for switches in 5.2.2. The reference ambient temperature of the fuse or F/C shall also be measured and related to both the ambient temperature surrounding the enclosure, and the maximum reference ambient temperature specified by the fuse or F/C manufacturer.

12. Time-current tests

12.1 Procedures common to all time-current tests

Time-current test practices shall be as specified in Clause 4 and in Clause 12.

12.1.1 Mounting and grounding of device

Only one position for mounting all devices is required. Grounding of the mounting bracket or base as specified in 4.6 is not necessary.

Copyright © 2000 IEEE. All rights reserved.

Copyright The Institute of Electrical and Electronics Engineers, Inc.
Provided by IHS under license with IEEE
No reproduction or networking permitted without license from IHS Not for Resale

12.1.2 Measurement of test values

12.1.2.1 Measurement of current during tests

The measurement of current through the fuse during a time-current test shall be made as follows:

a) A current existing for 5 s or more may be measured with a standard indicating ammeter.

b) A current of less than 5 s duration shall be measured with an oscillograph, or other suitable instrument, and the current wave (including the dc component of current and the ac decrement) shall be corrected to steady-state conditions for plotting both melting and total clearing time curves (see Annex B for method of correction).

NOTE—A standard ammeter equipped with an adjustable stop to reduce the movement of the needle during test will improve the accuracy of the measurement.

12.1.2.2 Measurement of time during test

The measurement of the time shall be made as follows:

a) A time longer than 10 s may be measured with a stop watch, electric clock, or timer

b) A time longer than 1 s may be measured with a synchronous timer

c) A time shorter than 1 s shall be measured with an oscillograph or suitable instrument

12.1.3 Description of time-current test parameters

12.1.3.1 Initial conditions

Tests shall be initiated with the fuse at an ambient temperature of 20–30 °C and without an initial load passing through the current-responsive element.

12.1.3.2 Test samples

The fuse links or fuse units shall be tested in the fuse cutout or fuse support with which they are designed to be used.

12.1.4 Presentation of time-current test data

The results of time-current tests shall be presented as time-current curves on log-log paper (preferably with current as abscissa and time as ordinate, and with the dimension of each decade as 5.6 cm). The curves shall show

a) The relation between the time in seconds and the rms symmetrical amperes required either to melt and sever the conducting element or to interrupt the circuit.

b) The basis of time on which the curves are plotted; that is, only the melting time required to melt and sever the conducting element, or the total clearing time, which combines both melting and arcing time.

c) The voltage at which the tests are made when plotted on the basis of total clearing time.

d) The type and rating of distribution or power fuses for which curve data apply.

e) The time range for the fuses, as indicated in 12.1.5, item a) through item e).

Copyright © 2000 IEEE. All rights reserved.
Copyright The Institute of Electrical and Electronics Engineers, Inc.
Provided by IHS under license with IEEE
No reproduction or networking permitted without license from IHS
Not for Resale

12.1.5 Time parameters of tests

Tests shall be made so that time-current curves are plotted in the time range of

a) 0.01–300 s for power class fuses (except current-limiting fuses) and distribution fuse links rated 100 A and below.
b) 0.01–600 s for power class fuses (except current-limiting fuses) and distribution fuse links rated above 100 A.
c) 0.01–3600 s for general-purpose power class and distribution class current-limiting fuses.
d) 0.01–10 000 s for full-range power class and distribution class current-limiting fuses.
e) 0.01–1000 s for minimum-melt time-current characteristics for backup type power and distribution current-limiting fuses and the time corresponding to the rated minimum interrupting current for total-clearing time-current characteristics.

NOTE—The total-clearing time-current characteristics for power class and distribution class fuse links covered under item a) and item b) above will have minimum clearing times greater than 0.01 s due to the clearing time associated with these types of fuses.

12.2 Description of melting time-current tests

12.2.1 Application of test parameters

Melting time-current tests shall be made at any voltage, up to the maximum voltage of the unit being tested, with the test circuit so arranged that current through the fuse is held to essentially a constant value. For low-voltage tests, when testing fuses having parallel elements that melt (progressively such as a fusible element and a strain wire) the test circuit shall have sufficient impedance to prevent a material change in the current that cannot be quickly corrected when the fusible element melts.

12.2.2 Presentation of melting time-current test data

Melting time-current curves for all fuse links, fuse units, or refill units shall be plotted to minimum values on the current axis, and the value shall be determined by taking the manufacturer’s average test value, as determined by the test specified in this clause, and subtracting a value equal to the manufacturer’s allowable minus variation.

12.3 Description of total-clearing time-current tests

12.3.1 Application of test parameters

Total-clearing time-current tests shall be made at the rated maximum voltage under the test circuit conditions specified for interrupting tests in Clause 6.

12.3.2 Presentation of total-clearing time-current test data

The total-clearing time-current curves for all fuse links, fuse units, and fuse refill units shall

a) Be plotted to maximum values (using the current during the melting part of the total period), which shall include the minimum melting time plus the tolerance
b) Add the maximum arcing time as determined by the test specified in this clause

When arcing time factors are used in place of tests at rated voltage, the method used to arrive at the total clearing time shall be shown. The total-clearing time-current curves should be dark red.

--`,,`-`-`,,`,,`,`,,`---
Copyright © 2000 IEEE. All rights reserved.

Copyright The Institute of Electrical and Electronics Engineers, Inc.
Provided by IHS under license with IEEE
No reproduction or networking permitted without license from IHS Not for Resale

13. Manual-operation, thermal-cycle, and bolt-torque tests (distribution cutouts)

13.1 Description of manual-operation tests

Three cutouts shall be closed and opened 200 times per the manufacturer's specifications.

13.1.1 Mounting of the device

The cutout shall be mounted and operated per the manufacturer's specifications.

13.1.2 Acceptance criteria

After testing the cutout shall be in the condition as specified in 4.4. There shall be no cracks in the insulators or loose hardware. A visual check for cracks may be used.

13.2 Description of thermal-cycle tests

13.2.1 Mounting of device

During the entire test the cutouts shall be mounted in the service position(s) that would most likely permit water to enter any openings in the device.

13.2.2 Test series

The thermal cycle test shall consist of consecutive water-immersion, cold-chamber, and hot-chamber cycling of the cutouts. Separate cold and hot-chambers may be used.

13.2.3 Number of devices to be tested

Five cutouts in new condition shall be tested. Open cutout fuse holders and disconnecting switch blades may be omitted from the test device for the convenience of testing.

13.2.4 Number of tests per device

Each cutout shall receive 10 thermal cycles.

13.2.5 Thermal cycle

Each cycle shall consist of the following:

a) The cutout shall be immersed in water for a minimum of 1 h. Water temperature shall be from 5 °C to 35 °C. The depth of immersion shall provide a minimum water level of 13 mm (½ in) above any porcelain cavity, filled or open, or any hardware.

b) The cutout shall be removed from the water. The temperature of the air surrounding the device shall be lowered from ambient room temperature to –40 °C at a rate controlled to prevent thermal shock. A temperature of –40 °C to –50 °C shall be maintained for a minimum of 2 h.

c) The temperature of the air surrounding the cutout shall be raised from –40 °C to 60 °C at a rate controlled to prevent thermal shock. A temperature of 60 °C to 70 °C shall be maintained for a minimum of 2 h. The device shall be permitted to return to room temperature before re-immersing it in water for subsequent test cycles.

NOTE—As a guide, thermal shock may be avoided by maintaining the rate of temperature change at less than 2 °C per minute. The transition time should be 2 h or less.

Copyright © 2000 IEEE. All rights reserved.
Copyright The Institute of Electrical and Electronics Engineers, Inc.
Provided by IHS under license with IEEE
No reproduction or networking permitted without license from IHS
Not for Resale

Separate hot and cold chambers may be used, which may require movement of the cutout. The position of the cutout shall not change during transfer from the water or movement between chambers.

13.2.6 Acceptance criteria

The condition of the cutout after test shall be as specified in 4.4. There shall be no cracks in the porcelain or loose hardware. A visual check for cracks may be used.

13.3 Description of torque tests

13.3.1 Test series

Torque tests shall be performed on cutouts that utilize threaded fasteners to attach the hardware to the insulator. Five new cutouts shall be tested.

13.3.2 Application of test parameters

A torque of 125% of the nominal values specified by the manufacturer shall be applied to the threaded fasteners that attach the hardware to the insulator.

13.3.3 Acceptance criteria

The condition of the device after testing shall be as specified in 4.4. There shall be no damage to the insulators, thread failures, or loose components.

14. Liquid-tightness tests

14.1 Description of liquid-tightness tests

Liquid-tightness tests are required on certain types of current-limiting fuses used in FEPs. These tests apply to any fuse or fuse container that is used in a liquid environment, such as those described in 1.3 for Types 3C, 4C, and 5C.

14.1.1 Mounting of device

The fuse or fuse container shall be mounted or supported in the liquid as specified by the manufacturer.

14.1.2 Thermal cycle for test in air

The device shall be thermally cycled in air from –30 °C to the rated maximum application temperature (as specified by the manufacturer) and back to –30 °C. The rate of temperature change shall be controlled to prevent thermal shock. Each thermal cycle from one temperature extreme to the other shall be accomplished in not more than 8 h, with a holding period at each temperature extreme of sufficient duration for the temperature of the device to stabilize. Current may be used as a supplemental heat source during the heating cycle.

14.1.3 Thermal cycle for test in liquid

The device shall be thermally cycled in liquid with current passed through the fuse for part of the cycle. The device shall be immersed in liquid, and the liquid temperature shall be raised from room temperature to the rated maximum application temperature (specified by the manufacturer) in not more than 6 h. The rate of rise of liquid temperature should not exceed 0.5 °C/min. When the liquid temperature reaches the maximum specified temperature, the fuse rated current (or the maximum permissible continuous current) shall be

Copyright © 2000 IEEE. All rights reserved.

Copyright The Institute of Electrical and Electronics Engineers, Inc.
Provided by IHS under license with IEEE
No reproduction or networking permitted without license from IHS Not for Resale

maintained through the fuse for a period of 2 h with the liquid temperature held at or above this maximum temperature. Current may be used as a supplemental heat source during the heating cycle.

At the conclusion of the 2 h current period, the liquid shall be allowed to cool to the cold-cycle ambient temperature of (25 ± 5) °C.

14.1.4 Alternate test

The requirements of 14.1.2 and 14.1.3 may be met by a single test series made according to 14.1.3 with the following exceptions. The test device shall be cycled from –30 °C to the rated maximum application temperature (specified by the manufacturer) in not more than 8 h, with a holding period at –30 °C of sufficient duration for the temperature of the fuse or the device to stabilize. In addition, at the conclusion of the 2 h maximum-temperature period, the liquid shall be cooled to –30 °C in not more than 8 h.

14.2 Test series

14.2.1 Number of tests

The test series shall consist of 10 thermal cycles over any convenient time period.

14.2.2 Number of samples

A total of five devices with the largest current-rated fuse in each of the physical fuse sizes manufactured shall be tested.

14.3 Acceptance criteria

All five samples shall pass one of the alternate test criteria methods selected for determining whether or not a particular design passes the test for liquid-tightness. Alternate, but not necessarily equivalent, test criteria methods are

a) Maintain a minimum of 96 kPa (14 lbf/in^2) positive pressure differential while the device is submerged in the appropriate liquid (or suitable equivalent liquid) over a 5 min period. There shall be an absence of bubbles.

b) Measure the leak rate using a helium-detecting mass spectrometer. The maximum permissible leak rate, both before and after exposure to the above specified test cycles, shall be 10^{-6} cm^3 (standard) per second (1 atm pressure differential).

c) The test device shall be carefully inspected for liquid ingress using ultraviolet light, spectrographic analysis, or another equivalent, positive liquid-detecting technique. No liquid ingress shall be detected.

Note that the use of ultraviolet light, or another technique for detecting the presence of liquid inside the fuse, will require a quantizing of the test to provide a correlation with expected long-time service when submersed in liquid. The use of a fluorescent dye in the liquid, plus comparison with an unexposed fuse, are possible techniques that should be considered.

15. Description of expendable-cap static-relief pressure tests

The device shall be tested without a fuse link. It shall be mounted and a means provided for exerting the prescribed test pressure through a medium of a liquid against the entire surface of the pressure-responsive area. (See 3.3.7 of ANSI C37.42-1996 for test details.)

Copyright © 2000 IEEE. All rights reserved.
Copyright The Institute of Electrical and Electronics Engineers, Inc.
Provided by IHS under license with IEEE
No reproduction or networking permitted without license from IHS
Not for Resale

Table 1—Design tests required

Design test given in following sections of this standard	ANSI C37.42-1996					ANSI C37.44-1981			ANSI C37.45-1981	ANSI C37.46-2000	ANSI C37.47-2000
	Specifications for high-voltage expulsion type distribution class fuses, cutouts, fuse disconnecting switches, and fuse links			Specifications for high-voltage distribution and power class expulsion, current-limiting, and combination types of external capacitor fuses for shunt capacitors		Specifications for high-voltage distribution class oil cutouts and fuse links			Specifications for high-voltage distribution class enclosed single-pole air switches	Specifications for high-voltage expulsion and current-limiting type power class fuses and fuse disconnecting switches	Specifications for high-voltage current-limiting type distribution class fuses, and fuse disconnecting switches
	Fuse cutouts	Disconnecting cutouts	Fuse links	Capacitor line fuses	Capacitor unit fuses	Fuse cutouts	Disconnecting cutouts	Fuse links			
5. Dielectric	X	X	—	X	—	X	X	–	X	X[a]	X[a]
6. Interrupting	X	—	X[b]	X	X	X	—	—	—	X[a]	X[a]
7. Load-break	X[c]	X[d]	—	X[d]	—	X	X	—	—	—	—
8. Making-current	—	—	—	—	—	X	—	—	—	—	—
9. Radio-influence	X	X	—	X	X	X	X	—	X	X[a]	X[a]
10. Short-time current	—	X	—	—	—	—	X	—	X	—	—
11. Tempera-ture-rise	X	X	X	X	X	X	X	X	X	X[a]	X[a]
12. Time-current	—	—	X	X	X	—	—	X	—	X	X
13. Manual operation, thermal cycle, and bolt torque	X	X	—	—	—	—	—	—	—	—	—
14. Liquid-tightness	—	—	—	—	—	—	—	—	—	X[d]	X[e]
15. Expendable-cap static-relief pressure	X[e]	—	—	X[b]	—	—	—	—	—	—	—

NOTE—X indicates a required test.

[a]When these types of fuses are used in enclosures, additional tests may be required. See appropriate ANSI standard listed above for complete requirements.
[b]Required only on open-link fuses.
[c]Required only on load-break cutouts having means provided for breaking load current.
[d]Required only on liquid-submersible fuses used in FEP.
[e]Required only on expendable caps for expendable-cap cutouts.

Copyright © 2000 IEEE. All rights reserved.

Copyright The Institute of Electrical and Electronics Engineers, Inc.
Provided by IHS under license with IEEE
No reproduction or networking permitted without license from IHS
Not for Resale

Table 2—Interrupting performance tests and test circuit parameters for distribution class open-link cutouts

Parameters	Test series				
	1[a]		2[a]		3[a]
Power-frequency recovery voltage	Rated maximum voltage: +5%, –0%				
Transient recovery voltage (TRV)	Under consideration				See Footnote[b]
Prospective (available) current—rms symmetrical	Rated interrupting current +5%, –0%		Under consideration		From 2.7 to 3.3 times fuse link rating[c]
X/*R* ratio (power factor)	Not less than 1.33 (not more than 0.60)		Under consideration		From 0.75 to 1.33 (from 0.80 to 0.60)
Making angle related to voltage zero—degrees	Random timing				
Allowable shunt capacitance	A lumped capacitance not exceeding 0.65 μF may be shunted across the fuse.		—		—
Current rating of fuse link	Min.[d]	Max.[c]	Min.[c]	Max.[c]	Min.[c]
Number of test	3	3	3	3	2
Number of test on each cutout[e]	3	3	3	3	2
Duration of power-frequency recovery voltage after interruption	Not less than 0.5 s				

[a]Prior to 1999, a sufficient number of tests were to be made at maximum rated voltage to satisfy the interrupting requirements, using the *X*/*R* ratio and allowable shunt capacitance values that are given in the table for Test Series 1. Based on current understanding, the additional tests represent the minimum requirements for adequate testing of a new device that does not have the benefit of extensive field experience. Parameters marked "under consideration" are still being developed for inclusion in the next revision. Where the value for a test current is not specified, this test is optional.

[b]The TRV for this test circuit shall be critically damped. Shunting the load reactance with a resistance having a value equal to approximately 40 times the value of the reactance is usually adequate to critically damp the circuit. However, if this value does not result in critical damping, the resistance may be reduced to achieve critical damping. For testing convenience, an oscillatory TRV may be acceptable with the agreement of the manufacturer. Critical damping is obtained when

$$R = \frac{f_o}{2f_n} X$$

where

f_o is the natural frequency of test circuit without damping

f_n is the power frequency

X is the reactance of the circuit at power frequency

[c]If the test involves a melting time appreciably higher than 2 s, the current may be increased to obtain a melting time of approximately 2 s.

[d]The minimum fuse link rating is 6 K, and the maximum fuse link rating is 50 T; if not available, any available 6 and 50 A fuse link is acceptable.

[e]After each test, only the parts that are normally field-replaceable shall be replaced.

Copyright © 2000 IEEE. All rights reserved.
Copyright The Institute of Electrical and Electronics Engineers, Inc.
Provided by IHS under license with IEEE
No reproduction or networking permitted without license from IHS
Not for Resale

Table 3—Interrupting performance tests and test circuit parameters for distribution class oil cutouts

Parameters	Test series						
	1[a]		2[a]		3[a]		4[a]
Power-frequency recovery voltage	Rated maximum voltage: +5%, –0%						
Transient recovery voltage (TRV)	Under consideration						See Note[b]
Prospective (available) current—rms symmetrical	Rated interrupting current: +5%, –0%		Under consideration				From 2.7 to 3.3 times fuse link rating[c]
X/*R* ratio (power factor)	See Table 4						
Making angle related to voltage zero—degrees	1st test: from +5 to +15 2nd test: from 85 to 105 3rd test: from 130 to 150				Under consideration		Random timing
Current rating of fuse link	Min.[d]	Max.[d]	Min.[d]	Max.[d]	Min.[d]	Max.[d]	Min.[d]
Number of tests	3	3	3	3	3	3	2
Number of tests on each fuse cutout[e]	3	3	3	3	3	3	2
Duration of power-frequency recovery voltage after interruption	Not less than 0.5 s						

[a]Prior to 1999, Test Series 1 was the only test required. Based on current understanding, the additional tests represent the minimum requirements for adequate testing of a new device that does not have the benefit of extensive field experience. Parameters marked "under consideration" are still being developed for inclusion in the next revision. Where the value for a test current is not specified, this test is optional.

[b]The TRV for this test circuit shall be critically damped. Shunting the load reactance with a resistance having a value equal to approximately 40 times the value of the reactance is usually adequate to critically damp the circuit. However, if this value does not result in critical damping, the resistance may be reduced to achieve critical damping. For testing convenience, an oscillatory TRV may be acceptable with the agreement of the manufacturer. Critical damping is obtained when:

$$R = \frac{f_o}{2f_n}X$$

where

f_o is the natural frequency of test circuit without damping

f_n is the power frequency

X is the reactance of the circuit at power frequency

[c]If the test involves a melting time appreciably higher than 2 s, the current may be increased to obtain a melting time of approximately 2 s.

[d]The minimum and maximum fuse links to be used for testing are the minimum and maximum fuse links available for use in the device.

[e]After each test, only the parts that are normally field-replaceable shall be replaced.

Copyright © 2000 IEEE. All rights reserved.

Copyright The Institute of Electrical and Electronics Engineers, Inc.
Provided by IHS under license with IEEE
No reproduction or networking permitted without license from IHS
Not for Resale

Table 4—Minimum X/R ratios for distribution class oil cutouts

Rated maximum voltage (kV)	Rated interrupting current—symmetrical rms amperes	Minimum *X*/*R* ratio	
		Links above 200 A	Links 200 A and below
2.6–5.5	1000–8000	9.0	2.3
7.8–8.3	1000–4000	9.0	2.3
15.0–15.5	1000–2500	10.0	2.3
15.0–15.5	2501–4250	12.0	2.3

Copyright © 2000 IEEE. All rights reserved.
Copyright The Institute of Electrical and Electronics Engineers, Inc.
Provided by IHS under license with IEEE
No reproduction or networking permitted without license from IHS
Not for Resale

Table 5—Interrupting performance tests and test circuit parameters for single-voltage-rated distribution class fuse cutouts (except current-limiting fuses, oil cutouts, and open-link cutouts)

Parameters		Test Series							
		1		2		3		4	5
Power-frequency recovery voltage		Rated maximum voltage: +5%, –0%							
Transient recovery voltage (TRV)		See Table 7, column 1						See Table 7, column 3	See Note[a]
Prospective (available) current—rms symmetrical		Rated interrupting current +5%, –0%		From 70% to 80% rated interrupting current		From 20% to 30% rated interrupting current[b]		From 400 A to 500 A[c]	From 2.7 to 3.3 times fuse link rating[d]
X/*R* ratio (power factor)		See Table 8							From 1.3 to 0.75 (from 0.6 to 0.8)
Making angle related to voltage zero—degrees		1st test: from –5 to +15 2nd test: from 85 to 105 3rd test: from 130 to 150				From 85 to 105		Random timing	
Fuse link rating		Min.[e]	Max.[f]	Min.[e]	Max.[f]	Min.[e]	Max.[f]	Min.[e]	Min.[e]
Number of tests		3	3	3	3	1	1	2	2
Number of tests on each device[g]		3	3	3	3	2		4	
Duration of power-frequency recovery voltage after interruption	Dropout fuses	Not less than 0.5 s							
	Non-dropout fuses	Not less than 0.5 s							

[a]The TRV for this test circuit shall be critically damped. Shunting the load reactance with a resistance having a value equal to approximately 40 times the value of the reactance is usually adequate to critically damp the circuit. However, if this value does not result in critical damping, the resistance may be reduced to achieve critical damping. For testing convenience, an oscillatory TRV may be acceptable with the agreement of the manufacturer. Critical damping is obtained when:

$$R = \frac{f_o}{2f_n}X$$

where

f_o is the natural frequency of test circuit without damping

f_n is the power frequency

X is the reactance of the circuit at power frequency

[b]For cutouts with an interrupting rating of 2.8 kA or less, Test Series 3 need not be made.

[c]For cutouts rated at 200 A, Test Series 4 need not be made.

[d]If the test involves a melting time appreciably higher than 2 s, the current may be increased to obtain a melting time of approximately 2 s.

[e]The minimum fuse link rating is 6K for cutouts rated 50 A and 100 A, and 140K for cutouts rated 200 A.

[f]The maximum fuse link rating is 50T for cutouts rated 50 A, 100T for cutouts rated 100 A, and 200T for cutouts rated 200 A.

[g]After each test, only the parts that are normally field-replaceable shall be replaced. These include the fuse link and expendable cap (if used).

Copyright © 2000 IEEE. All rights reserved.

Copyright The Institute of Electrical and Electronics Engineers, Inc.
Provided by IHS under license with IEEE
No reproduction or networking permitted without license from IHS
Not for Resale

Table 6—Interrupting performance tests and test circuit parameters for slant-voltage-rated (multiple-voltage-rated) distribution class fuse cutouts

Parameters		Test series									
		1		2		3		4	5	6[a]	
Power-frequency recovery voltage		Rated maximum voltage to the left of the slant +5%, –0%		Rated maximum voltage to the right of the slant +5%, –0%							
Transient recovery voltage (TRV)		See Table 7, column 1				See Table 7, column 2		See Table 7, column 4	See Note[b]	See Table 7, column 2	
Prospective (available) current—rms symmetrical		Rated interrupting current +5%, –0%		From 70% to 80% rated interrupting current		From 20% to 30% rated interrupting current[c]		From 400 A to 500 A[d]	From 2.7 to 3.3 times fuse link rating[e]	Rated interrupting current +5%, –0%	
X/*R* ratio (power factor)		See Table 8							From 1.3 to 0.75 (from 0.6 to 0.8)	See Table 8	
Making angle related to voltage zero—degrees		1st test: from –5 to +15 2nd test: from 85 to 105 3rd test: from 130 to 150				From 85 to 105		Random timing		1st test: from –5 to +15 2nd test: from 85 to 105 3rd test: from 130 to 150	
Fuse link rating		Min[f]	Max[g]	Min[f]	Max[g]	Min[f]	Max[g]	Min[f]	Min[f]	Min[f,h]	Max[g,h]
Number of tests		3	3	3	3	1	1	2	2	3	3
Number of tests on each fusecutout[i]		3	3	3	3	2		4		3	3
Duration of power-frequency recovery voltage after interruption	Dropout fuses	Not less than 0.5 s									
	Non-dropout fuses	Not less than 0.5 s									

[a]Test series 6 uses two identically rated cutouts in electrical series connection. Test-circuit ground must not be between the cutouts.

[b]The transient recovery voltage (TRV) for this test circuit shall be critically damped. Shunting the load reactance with a resistance having a value equal to approximately 40-times the value of the reactance is usually adequate to critically damp the circuit. However, if this value does not result in critical damping, the resistance may be reduced to achieve critical damping. For testing convenience, an oscillatory TRV may be acceptable with the agreement of the manufacturer. Critical damping is obtained when:

$$R = \frac{f_o}{2f_n}X$$

where

f_o is the natural frequency of test circuit without damping

f_n is the power frequency

X is the reactance of the circuit at power frequency

[c]For cutouts with an interrupting rating of 2.8 kA or less, Test Series 3 need not be made.

[d]For cutouts rated 200 A, Test Series 4 need not be made.

[e]If the test involves a melting time appreciably higher than 2 s, the current may be increased to obtain a melting time of approximately 2 s.

[f]The minimum fuse link rating is 6K for cutouts rated 50 A and 100 A and 140K for cutouts rated 200 A.

[g]The maximum fuse link rating is 50T for cutouts rated 50 A, 100T for cutouts rated 100 A, and 200T for cutouts rated 200 A.

[h]Use same fuse link rating in both cutouts.

[i]After each test, only the parts normally field-replaceable shall be replaced. These include the fuse link and expendable cap (if used).

Copyright © 2000 IEEE. All rights reserved.
Copyright The Institute of Electrical and Electronics Engineers, Inc.
Provided by IHS under license with IEEE
No reproduction or networking permitted without license from IHS
Not for Resale

Table 7—Inherent transient-recovery-voltage (TRV) test circuit parameters for distribution class fuse cutouts, liquid submerged expulsion fuses and distribution class capacitor line fuses

Rated maximum voltage (kV)		Column 1		Column 2		Column 3		Column 4	
Single-voltage-rated devices	Slant-voltage-rated devices	Applicable test tables and test series							
		Table 5, Series 1,2 & 3 Table 6, Series 1 & 2 Table 13, Series 1 Table 15, Series 3 & 4		Table 6, Series 3 & 6		Table 5, Series 4		Table 6, Series 4	
		Frequency (f) (kHz) +10%, –0%	Peak factor[a] +10%, –0%	Frequency (f) (kHz) +10%, –0%	Peak factor[a] +10%, –0%	Frequency (f) (kHz) +10%, –0%	Peak factor[a] +10%, –0%	Frequency (f) (kHz) +10%, –0%	Peak factor[a] +10%, –0%
2.6–2.8	—	6.1	1.3	—	—	37.0	1.45	—	—
5.2–5.5	—	4.3	1.3	—	—	37.0	1.45	—	—
7.8–8.3	7.8/15.0–8.3/15.5	3.3	1.3	2.3	1.3	31.0	1.55	24.0	1.60
15.0–15.5	15.0/27.0–15.5/27.0	2.3	1.3	1.7	1.3	24.0	1.60	15.0	1.60
22.0–27.0	27.0/38.0	1.7	1.3	1.5	1.3	15.0	1.60	10.0	1.60
38.0	—	1.5	1.3	—	—	10.0	1.60	—	—

[a] $$\text{factor} = \frac{\text{first TRV peak in kV}}{\sqrt{2} \times (\text{power} - \text{frequency recovery voltage in kV}) \times [\sin(\arctan X/R)]}$$

X/R is the value from Table 8, Table 13, or Table 15.

Peak factor should be determined based on symmetrical current.

TRV envelope is a (1 – cos) shape, with time-to-peak (in microseconds) $= \frac{1000}{2f \text{ in kHz}}$.

RRRV = Average rate-of-rise of the (transient) recovery voltage (in volts / microseconds)

$$= \frac{\text{first TRV peak}}{\text{time–to–peak}}$$

$$= 2\sqrt{2} \times (\text{power-frequency recovery voltage kV}) \times [\sin(\arctan X/R)] \times (\text{peak factor}) \times (f \text{ in kHz})$$

Copyright © 2000 IEEE. All rights reserved.

Copyright The Institute of Electrical and Electronics Engineers, Inc.
Provided by IHS under license with IEEE
No reproduction or networking permitted without license from IHS Not for Resale

Table 8—Minimum X/R ratios for distribution class fuse cutout interrupting tests (except current-limiting fuses, oil cutouts, and open-link cutouts)

Rated maximum voltage (kV)		Table 5, Series 1, 2, and 3 Table 6, Series 1, 2, 3, and 6		Table 5 and Table 6, Series 4
Single-voltage-rated cutouts	**Slant-voltage-rated cutouts**	**Rated interrupting current—symmetrical rms amperes**	**Minimum *X*/*R***	**Minimum *X*/*R***
2.6–2.8	—	≤ 16000	5	1.5
5.2–5.5	—	≤ 12500	5	1.5
7.8–8.3	—	≤ 10000	8	1.8
		> 10000	12	
15.0–15.5	7.8/15.0–8.3/15.5	≤ 7100	8	2.4
		> 7100	12	
22.0–27.0	15.0/27.0–15.5/27	≤ 2500	8	3.7
		> 2500	12	
38.0	27.0/38.0	≤ 10000	15	5.1

Copyright © 2000 IEEE. All rights reserved.
Copyright The Institute of Electrical and Electronics Engineers, Inc.
Provided by IHS under license with IEEE
No reproduction or networking permitted without license from IHS
Not for Resale

Table 9— Interrupting performance tests and test circuit parameters for power class fuses (except current-limiting fuses)

Parameters		Test series									
		1		2[a]		3		4		5	6
Power-frequency recovery voltage		87% of rated maximum voltage +5%, –0%		Rated maximum voltage +5%, –0%							
Transient recovery voltage (TRV)		See Table 10, column 1								See Table 10, column 3	See Note[b]
Prospective (available) current — rms symmetrical		Rated interrupting current +5%, –0%		From 87% to 91% rated interrupting current		From 60% to 70% rated interrupting current		From 20% to 30% rated interrupting current		From 400 A to 500 A[c,d]	From 2.7 to 3.3 times link or fuse unit rating[d]
X/*R* ratio (power factor)		Not less than 15 (not greater than 0.067)								See Table 11	From 1.3 to 0.75 (from 0.6 to 0.8)
Making angle related to voltage zero—degrees		1st test: from –5 to +15 2nd test: from 85 to 105 3rd test: from 130 to 150						From 85 to 105		Random timing	
Current rating of fuse link or fuse unit		Min.	Max.	Min.	Max.	Min.	Max.	Min.	Max.	Min.	Min.
Number of tests		3	3	3	3	3	3	1	1	2	2
Number of tests on each fuse employing refill units or fuse links[e]		3	3	3	3	3	3	2		4	
Number of tests on each nonrenewable fuse		1	1	1	1	1	1	1	1	1	1
Duration of power-frequency recovery voltage after interruption	Dropout fuses	Not less than dropout time or 0.5 s, whichever is greater									
	Non-dropout fuses	Not less than 10 min[f,g]								Not less than 1 min	

[a]If Series 1 tests are made at 100% of rated maximum voltage, Series 2 tests need not be made.

[b]The transient recovery voltage (TRV) for this test circuit shall be critically damped. Shunting the load reactance with a resistance having a value equal to approximately 40-times the value of the reactance is usually adequate to critically damp the circuit. However, if this value does not result in critical damping, the resistance may be reduced to achieve critical damping.

For testing convenience, an oscillatory TRV may be acceptable with the agreement of the manufacturer. Critical damping is obtained when:

$$R = \frac{f_o}{2f_n}X$$

where

f_o is the natural frequency of test circuit without damping

f_n is the power frequency

X is the reactance of the circuit at power frequency

[c]If the values are lower than those of Series 6, Series 5 tests need not be made.

[d]If the test involves a melting time appreciably higher than 2 s, the current may be increased to obtain a melting time of approximately 2 s.

[e]After each test, the refill unit or fuse link and expendable cap (if used) shall be replaced. Any exhaust-control device normally field-replaceable should be replaced as follows: Test Series 1, 2 and 3; Replace after each test. Test Series 4, 5 and 6; Replace after each series of tests.

[f]If leakage current through the fuse is monitored following interruption, recovery voltage may be removed after leakage current has been less than 1 mA for a 2 min duration.

[g]Where test station limitations make it difficult for the full value of recovery voltage to be maintained for the specified duration, the test circuit may be switched to an auxiliary source. Such changeover shall not be made until a time of at least 10 s has elapsed from current interruption. Any necessary circuit interruption to effect this changeover shall not exceed 0.2 s duration. The auxiliary source shall be capable of supplying a current of at least 1 ampere, while maintaining the specified recovery voltage, for the remainder of the specified duration. Any breakdown of the fuse during this voltage holding period (i.e. an increase in leakage current through the fuse to 1 ampere or more) shall be considered an unsuccessful fuse interruption. Current monitoring may be by any convenient method. One acceptable method is to trip a circuit breaker used to protect the auxiliary source.

Copyright © 2000 IEEE. All rights reserved.

Copyright The Institute of Electrical and Electronics Engineers, Inc.
Provided by IHS under license with IEEE
No reproduction or networking permitted without license from IHS
Not for Resale

Table 10— TRV test circuit parameters for power class expulsion fuses, power and distribution class current-limiting fuses, and power class capacitor line fuses

Rated maximum voltage (kV)[a]	Column 1		Column 2		Column 3	
	Applicable test table and test series					
	Table 9 Series 1, 2, 3, and 4 Table 12 series 1 Table 15, Series 3 and 4		Table 12, Series 2		Table 9, Series 5	
	Frequency (f) (kHz) +10%, –0%	Peak factor[b] +10%, –0%	Frequency (f) (kHz) +10%, –0%	Peak factor[b] +10%, –0%	Frequency (f) (kHz) +10%, –0%	Peak factor[b] +10%, –0%
2.8	8.5	1.4	3.3	1.5	38.0	1.45
5.1–5.5	6.0	1.4	2.7	1.5	29.0	1.55
8.3	4.7	1.4	2.3	1.5	19.0	1.65
15.0–15.5	3.2	1.4	1.8	1.5	18.0	1.65
22.0–27.0	2.1	1.4	1.3	1.5	12.0	1.65
38.0	1.6	1.4	1.1	1.5	8.0	1.65

[a]For rated maximum voltages above 38 kV, TRV parameters of the test circuit are not specified. Appropriate values may be selected by agreement between the users and manufacturer.

[b] $$\text{Peak factor} = \frac{\text{first TRV peak in kV}}{\sqrt{2} \times (\text{power – frequency recovery voltage in kV}) \times [\sin(\arctan X/R)]}$$

X/*R* is the value from Table 9 for Test Series 1, 2, 3 and 4, and from Table 11 for Test Series 5 for expulsion type power fuses; Table 12 for current-limiting fuses; and Table 15 for power class capacitor fuses.

Peak factor should be determined based on a symmetrical current.

TRV envelope is a (1 – cos) shape, with time-to-peak (in microseconds) $= \frac{1000}{2f \text{ in kHz}}$

RRRV = Average rate-of-rise of the (transient) recovery voltage (in volts/microseconds)

$$= \frac{\text{first TRV peak}}{\text{time – to – peak}}$$

$$= 2\sqrt{2} \times (\text{power-frequency recovery voltage kV}) \times [\sin(\arctan X/R)] \times (\text{peak factor}) \times (f \text{ in kHz})$$

Copyright © 2000 IEEE. All rights reserved.
Copyright The Institute of Electrical and Electronics Engineers, Inc.
Provided by IHS under license with IEEE
No reproduction or networking permitted without license from IHS
Not for Resale

Table 11—Minimum X/R ratios for Test Series 5 for power class fuses (except current-limiting fuses)

Rated maximum voltage (kV)	Minimum *X*/*R* ratio
2.8	1.5
5.1–5.5	1.5
8.3	1.8
15.0–15.5	8.0
23.0–27.0	8.0
38.0	12.0
48.3	12.0
72.5	15.0
121.0	15.0
145.0	15.0
169.0	15.0

Copyright © 2000 IEEE. All rights reserved.

Copyright The Institute of Electrical and Electronics Engineers, Inc.
Provided by IHS under license with IEEE
No reproduction or networking permitted without license from IHS
Not for Resale

Table 12—Interrupting performance tests and test circuit parameters for current-limiting power and distribution class fuses

Parameters		Type of fuse	Test series			
			1		2	3[a]
Power-frequency recovery voltage		Power	87% of rated maximum voltage +5%, –0%	Rated maximum voltage +5%, –0%	Rated maximum voltage +5%, –0%	
		Distribution	Rated maximum voltage + 5%, –0%	Not required		
Transient recovery voltage (TRV)		Power and distribution	See Table 10 column 1		See Table 10 column 2	See Note[b]
Prospective (available) current rms symmetrical		Power	I_1 +5%, –0%	87% of I_1 +5%, –0%[c]	I_2	I_3[d] +0%, –10%
		Distribution	I_1 +5%, –0%	Not required		
X/R ratio (power factor)		Power	Not less than 15 (not greater than 0.067)			From 2.3 to 1.3
		Distribution	Not less than 10 (not greater than 0.100)			(From 0.4 to 0.6)
Making angle after voltage zero—degrees		Power and distribution	Not applicable		0 to 20	Random timing
Instantaneous current at initiation of arcing		Power and distribution	Not applicable		0.85 I_2 to 1.06 I_2	Not applicable
Initiation of arcing after voltage zero—degrees		Power and distribution	For one test: from 40 to 65 For two test: from 65 to 90[d]		Not applicable	Not applicable
Duration of power-frequency recovery voltage after interruption	Dropout fuse	Power and distribution	Not less than dropout time or 1s, whichever is greater			
	Non-dropout fuse		Not less than 1 min[e,f]		Not less than 10 min[e]	
Current rating of fuse or fuse unit		Power and distribution	See 6.6.4			
Number of tests (see 6.6.4)		Power	3	3	3	2
		Distribution	3	Not required	3	2

[a]Series 3 tests verify the operation of the fuse at low currents. For the value of these currents, see 6.6.1. When test station limitations prevent the maintenance of constant current, the tolerance on the current may be exceeded during not more than 20% of the melting time, provided that the current at the initiation of arcing is within the tolerance specified, and the minimum time for melting of general-purpose and full-range fuses is maintained. To avoid testing at the specified voltage for the full test period, an alternate method for Series 3 tests is specified in 6.6.2. The test method for series three tests for full-range fuses is specified in 6.6.3.

[b]TRV for this test circuit shall be critically damped. Shunting the load reactance with a resistance having a value equal to approximately 40 times the value of the reactance is usually adequate to critically damp the circuit. However, if this value does not result in critical damping, the resistance may be reduced to achieve critical damping. For testing convenience, an oscillatory TRV may be acceptable with the agreement of the manufacturer. Critical damping is obtained when:

$$R = \frac{f_o}{2f_n} X$$

where

f_o is the natural frequency of test circuit without damping
f_n is the power frequency
X is the reactance of the circuit at power frequency

[c]Test need not be performed if tests at the I_1 level are made at 100% of rated maximum voltage.

[d]Since the operating conditions can produce a wide variety of stresses on the fuse, and as the interrupting tests are intended (in principal) to produce the most severe conditions (mainly as regards the arc energy and the thermal and mechanical stresses for this value of current) it is recognized that these conditions will be practically obtained at least once when making the three tests indicated.

[e]Where test station limitations make it difficult for the full value of recovery voltage to be maintained for the specified duration, the test circuit may be switched to an auxiliary source. Such changeover shall not be made until a time of at least 10 s has elapsed from current interruption. Any necessary circuit interruption to effect this changeover shall not exceed 0.2 s duration. The auxiliary source shall be capable of supplying a current of at least 1 A, while maintaining the specified recovery voltage, for the remainder of the specified duration. Any breakdown of the fuse during this voltage holding period (i.e., an increase in leakage current through the fuse to 1 A or more) shall be considered an unsuccessful fuse interruption. Current monitoring may be by any convenient method. One acceptable method is to trip a circuit breaker used to protect the auxiliary source.

[f]If Series 2 tests are not made, duration shall be not less than 10 min.

Copyright © 2000 IEEE. All rights reserved.
Copyright The Institute of Electrical and Electronics Engineers, Inc.
Provided by IHS under license with IEEE
No reproduction or networking permitted without license from IHS
Not for Resale

Table 13—Interrupting performance test and test circuit parameters for liquid-submerged expulsion fuses[a] used in enclosures

Parameters	Test series			
	1		2	
Power-frequency voltage	Rated maximum voltage: +5%, –0%			
Transient recovery voltage (TRV)	See Table 7, column 1		See Note[b]	
Prospective (available) current—rms symmetrical	Rated interrupting current: +5%, –0%		2.7 to 3.3 times link or fuse-unit rating[c]	
X/*R* ratio (power factor)	Not less than 8 (not greater than 0.124)		From 1.3 to 0.75 (from 0.6 to 0.8)	
Making angle after voltage zero—degrees	1st test: from +5 to +15 2nd test: from 85 to 105 3rd test: from 130 to 150		Random timing	
Current rating of fuse link or fuse unit	Minimum	Maximum	Minimum	Maximum
Number of tests[d]	3	3	2	2
Duration of power-frequency recovery voltage after interruption	Not less than 1 min			

[a]In some cases, these devices are designed to be used in series with a current-limiting fuse. For those devices where the current-limiting fuse is an integral part of the device, the test should be performed without the current-limiting fuse, but with a device that simulates the size and shape of the current-limiting fuse except for it's fusible element.

[b]The TRV for this test circuit shall be critically damped. Shunting the load reactance with a resistance having a value equal to approximately 40 times the value of reactance is usually adequate to critically damp the circuit. However, if this value does not result in critical damping, the resistance may be reduced to achieve critical damping. For testing convenience, an oscillatory TRV may be acceptable with the agreement of the switchgear manufacturer. Critical damping is obtained when

$$R = \frac{f_o}{2f_n} X$$

where

f_o is the natural frequency of test circuit without damping

f_n is the power frequency

X is the reactance of the circuit at power frequency

[c]If the test involves a melting time appreciably higher than 2 s, the current may be increased to obtain a melting time of approximately 2 s.

[d]The number of tests on any one holder for devices with replaceable links should be limited to the number recommended by the switchgear manufacturer.

Copyright © 2000 IEEE. All rights reserved.

Copyright The Institute of Electrical and Electronics Engineers, Inc.
Provided by IHS under license with IEEE
No reproduction or networking permitted without license from IHS Not for Resale

Table 14—Types of interrupting performance tests required for capacitor fuses

Tests	Fuse type		
	Capacitor line fuse	Capacitor unit fuses used where inductive faults can occur	Capacitor unit fuses used where inductive faults are unlikely to occur (see Note[a])
Power-frequency inductive currents (see 6.10.2)	X	X	—
Power-frequency capacitive currents (see 6.10.3)	X	X	X
Capacitive-discharge currents (see 6.10.4)	See Note[b]	X	X

[a]Examples of these applications are as follows:

1) Individual fuses in wye-connected banks with ungrounded neutral and ungrounded frames

2) Banks with series capacitors.

[b]Unusual applications, such as back-to-back banks on the same pole with each bank having its own line fuse could require the fuse to be capable of interrupting capacitive discharge currents. Since the size of these banks would generally be small, the discharge currents could be satisfactorily handled by most line fuses. Consult the fuse manufacturer for these types of applications.

Copyright © 2000 IEEE. All rights reserved.
Copyright The Institute of Electrical and Electronics Engineers, Inc.
Provided by IHS under license with IEEE
No reproduction or networking permitted without license from IHS
Not for Resale

Table 15—Capacitive current-interrupting performance tests and test circuit parameters for all types of capacitor fuses

Parameters		Capacitor unit fuses				Capacitor line fuses							
		Test series				Test series							
		1		2		3				4			
Power-frequency recovery voltage (excluding dc voltage component)		Rated maximum voltage: +5%, –0% (see 6.10.5 for crest recovery voltage requirements) (see Note[a])											
Prospective (available) current—rms symmetrical		Rated capacitive interrupting current +5%, –0%		Capacitive current value resulting in a melting time of 10 s minimum.		Rated capacitive interrupting current +5%, –0%				Capacitive current value resulting in a melting time of 10 s minimum			
Source	*X*/*R* ratio	≥8											
	TRV parameters	No TRV control required				Distribution class fuses—see Table 7, column 1, Power class fuses—see Table 10, column 1							
	Short-circuit current	12.5 to 25 times rated capacitive interrupting current				See Table 16							
Test circuit		See 6.10.3 and figures listed below (Where two figures are listed for a test series, the circuit used is optional.)											
		Figure 3a		Figure 3b		Figure 3c		Figure 3d		Figure 3e		Figure 3e	
Switching angle related to voltage zero of source (degrees)		From –10° to +10°		From +85° to +105°		Random timing		From –10° to +10°		From +85° to +105°		Random timing	
Current rating of fuse unit or fuse link to be tested (see Note[b] and Note[c])		Min.	Max.	Min.	Max.	Min.	Max.	Min.	Max.	Min.	Max.	Min.	Max.
Number of tests (see Note[d])		3	3	3	3	2	2	3	3	3	3	2	2
Number of tests on each fuse holder for expulsion type fuses (see Note[d])		3	3	3	3	4		3	3	3	3	4	
Duration of power-frequency recovery voltage after interruption	Dropout and isolating-gap fuses	Not less than dropout time or 0.5 s, whichever is greater											
	Non-dropout and isolating-gap fuses	Not less than 1 min											

[a]For slant-voltage-rated cutouts, Test series 3 and 4 shall be made with a test voltage at the value to the right of the slant. For example, the test voltage for 15/27 kV rated cutouts shall be at 27 kV.

[b]For all types of expulsion fuses that use replaceable links, the minimum and maximum fuse links to be used for the tests are related to the ampere rating of the fuse and the basic construction of the fuse link. For all fuses rated 50 A maximum, the minimum size link for testing is a 6 A type K and the maximum is a 50 A type T; for fuses rated 100 A maximum, the minimum size link for testing is a 6 A type K, and the maximum size link for tests is a 100 A type T; for fuses rated above 50 A to 100 A maximum, the minimum size link is a 65 A type K, and the maximum is a 100 A type T; for fuses rated above l00 A to 200 A maximum, the minimum link is a l40 A type K and the maximum link is a 200 A type T; If the construction of intermediate fuse links, differs from the construction of the minimum or maximum rated fuse links and this difference in construction is likely to adversely affect interruption performance, then additional testing of such ratings is required.

[c]For all types of current-limiting fuses and for expulsion type fuses that do not use replaceable links, the minimum size fuse for testing is the smallest current rating in the fuse's homogeneous series and the maximum size fuse is the largest in that particular series. See 6.6.4 for current-limiting fuse homogeneous series parameters. Expulsion fuses that do not use replaceable links are considered as forming a homogeneous series when their characteristics comply with the following:

1) Rated voltage, interrupting current rating, and rated frequency shall be the same.
2) All materials shall be the same, except that the metals used for the fusible element and the conductor(s) that complete the electrical circuit between the terminals of a fuseholder of a fuse may vary.
3) All dimensions of the fuse unit shall be the same, except for the cross-section and length of the fusible element and the cross-section and length of the conductor(s) that complete the electrical circuit between the terminals of a fuseholder of a fuse.

[d]After each test, only the parts normally field replaceable shall be replaced.

Copyright © 2000 IEEE. All rights reserved.

Copyright The Institute of Electrical and Electronics Engineers, Inc.
Provided by IHS under license with IEEE
No reproduction or networking permitted without license from IHS
Not for Resale

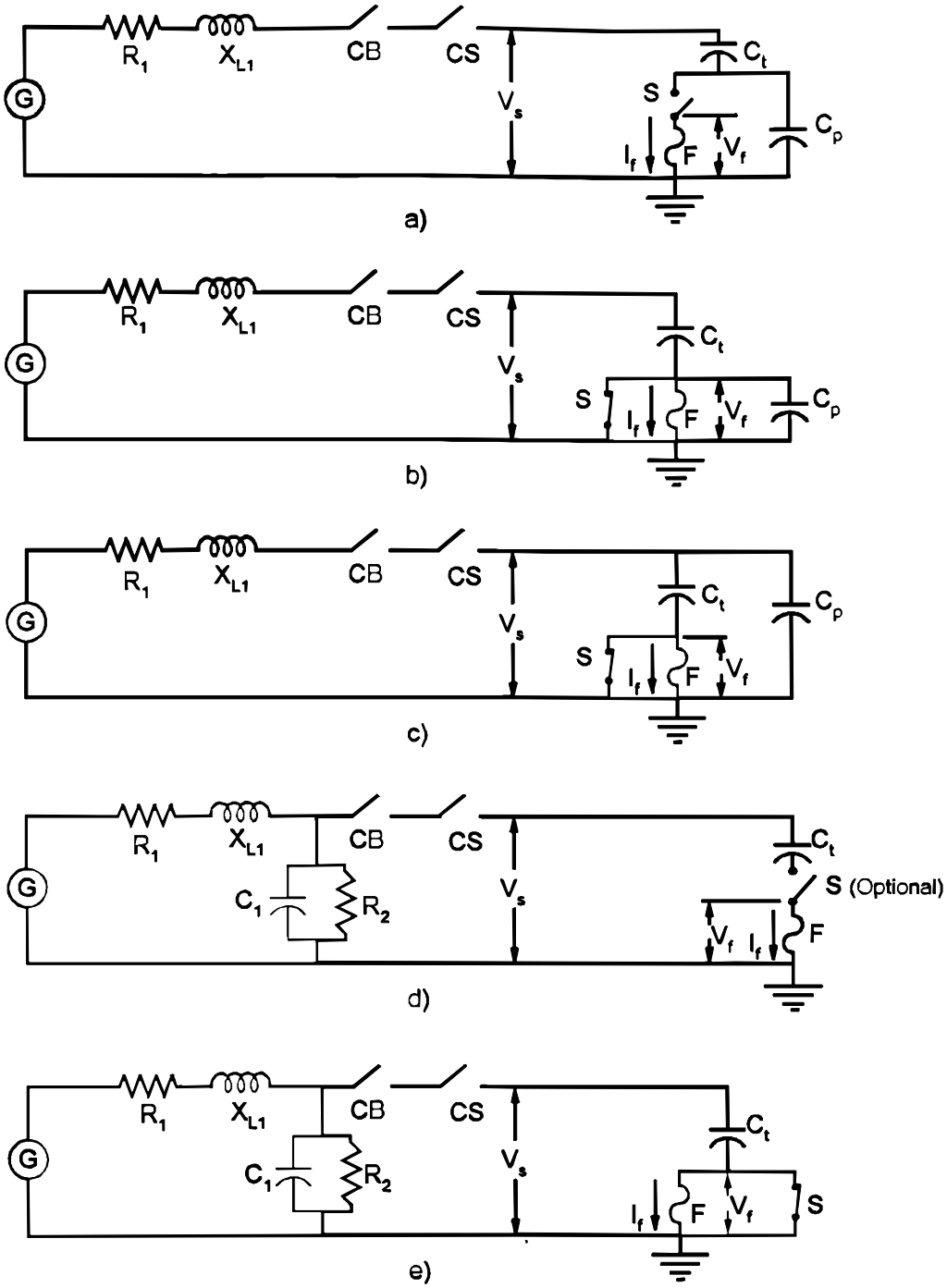

NOTE—See Notes for Figure 3 on page 63.

Figure 3—Typical circuit diagrams for capacitive current-interrupting tests

Copyright © 2000 IEEE. All rights reserved.
Copyright The Institute of Electrical and Electronics Engineers, Inc.
Provided by IHS under license with IEEE
No reproduction or networking permitted without license from IHS
Not for Resale

NOTES for Figure 3:

1—Definitions for Figure 3 are as follows:

C_1 is the TRV frequency control for the source

CB is the circuit breaker

C_p are the capacitors corresponding to the capacitors in parallel with the failed unit

CS is the laboratory closing or isolating switch

C_t are the capacitors for producing the required capacitive test current

F is the fuse under test

G is the power source

I_f is the fuse current

$$I_f = V_s \times 2\pi \times (\text{power frequency in Hz}) \times C_t$$

R_1 is the resistance to control the *X*/*R* of the source

R_2 is the damping resistance to control the peak factor of the source

S is the switch for initiating the fuse operation

V_f is the rated maximum fuse voltage (i.e., the power-frequency component of this voltage, after the fuse interrupts the current, shall be equal to or greater than the rated maximum voltage of the fuse)

For parts a) and b) of Figures 3:

$$V_f = (V_s) \times \left(\frac{C_t}{C_p + C_t} \right)$$

For Figures 3a) and 3b):

$$V_f = (V_s) \times \left(\frac{C_t}{C_p + C_t} \right)$$

For parts c), d), and e) of Figures 3:

V_s is the source voltage

X_{L1} is the inductive reactance of the source

2—For parts d) and e) of Figure 3, damping circuits other than those shown for controlling the inherent TRV parameters of the test circuit, may be used by mutual agreement between manufacturer and test laboratory. Such use shall be noted and explained in the test report.

3—In the circuits shown in parts a), b), and c) of Figure 3, the effect of capacitance on the recovery voltage appearing across the fuse is taken into account by C_p. This value represents between 300 kVAR and 400 kVAR. Experience has shown that the value of C_p is not critical on the capacitive interrupting performance of fuses.

C_p shall be

$$C_p(\text{uF}) \geq \frac{1000}{(V_f)^2(\text{kV})}$$

4—For parts a) and d) of Figures 3, closing the switch S initiates the fuse operation and for parts b), c), and e) of Figure 3, opening the shunting switch S initiates the fuse operation. Note that closing of the switch CS may also be used to initiate the fuse operation for the test circuit shown in Figure 3d).

The impedance of the shunting switch S including the connected cable, used for the test circuits as shown in parts b), c), and e) of Figure 3, should be minimized in order to ensure that with the switch closed, the current through the fuse does not exceed 1.5 times the current rating of the fuse, as shown on the nameplate. As an alternative, a small impedance may be connected in series with the fuse, thereby reducing the current through the fuse and increasing the current through the parallel connected shunting switch.

Copyright © 2000 IEEE. All rights reserved.

Copyright The Institute of Electrical and Electronics Engineers, Inc.
Provided by IHS under license with IEEE
No reproduction or networking permitted without license from IHS Not for Resale

Table 16—Source short-circuit current for capacitor line fuses

Continuous current rating of fuse unit or fuse link as shown on the nameplate (A)	Short-circuit level of source in rms symmetrical amperes[a,b,c]
>1 and 50	1250–2500
>50 and 100	2500–5000
>100 and 200	5000–10000
>200 and 300	7500–15000
>300	10 000–20 000

[a]The values for the short-circuit level have been selected based on 2% to 4% e. The e chosen is representative of the percent voltage regulation attributed to capacitor bank installations in the field and is estimated as follows:

$$\%\Delta e \approx \frac{X_L}{X_C} \times 100 \approx \frac{I_C}{I_{SC}} \times 100$$

where

X_L is the inductive reactance of the source

X_C is the capacitive reactance of the load

I_C is the continuous current rating of the fuse unit or fuse link as shown on the nameplate (A)

I_{SC} is the symmetrical rms short-circuit current of the source

[b]Current-limiting fuses conforming to a homogeneous series should use the short-circuit current values listed above, based on the maximum continuous current rating in the homogeneous series.

[c]If the inductive interrupting current rating of the fuse is less than the values shown, use this lower value.

Copyright © 2000 IEEE. All rights reserved.
Copyright The Institute of Electrical and Electronics Engineers, Inc.
Provided by IHS under license with IEEE
No reproduction or networking permitted without license from IHS
Not for Resale

Table 17— Size and length of bare conductor for specified tests

Rated continuous current of fuse cutout, switch, or fuse support (A)						Size and length of bare copper leads	
Distribution enclosed, open, and open-link cutouts when tested as a:		Distribution oil fuse and disconnecting cutout	Distribution enclosed air switch	Power fuse and distribution current-limiting fuse	Size of leads	Minimum length	
Fuse cutout	Disconnecting cutout					m	(in)
50	—	—	—	Up to 50	No. 6 AWG Solid	1.2	(48)
—	100	—	—	—	No. 2 AWG Stranded	1.2	(48)
100	—	—	—	100	No. 1 AWG Stranded	1.2	(48)
—	200	—	—	—	No. 2/0 AWG Stranded	1.2	(48)
–	—	100	—	—	No. 1/0 AWG Stranded	1.2	(48)
200	–	200	200	200	No. 4/0 AWG Stranded	1.2	(48)
—	300	300	300	300	250 kc mil[a]	1.2	(48)
—	—	—	400	400	400 kc mil[a]	1.2	(48)
—	—	—	600	—	600 kc mil[a]	1.2	(48)

[a]Thousand circular mils.

Copyright © 2000 IEEE. All rights reserved.

Copyright The Institute of Electrical and Electronics Engineers, Inc.
Provided by IHS under license with IEEE
No reproduction or networking permitted without license from IHS
Not for Resale

Table 18—First and second major current peaks for a specified momentary current and circuit X/R

Momentary current (kA rms asymmetrical)[a]	*X*/*R*[a]	First major current peak (kA)	Second major current peak (kA)
6	6.5	10.3	7.8
6	8	10.3	8.0
6	12	10.2	8.4
8	5	13.8	10.3
8	8	13.7	10.7
8	15	13.5	11.4
10	8	17.1	13.3
10	25	16.7	14.9
11	4.2	19.1	14.2
12	8	20.6	16.0
12	12	20.4	16.7
14	5	24.2	18.0
14	8	24.0	18.7
16	12	27.1	22.3
20	5	34.5	25.7
20	12	33.9	27.9
20	25	33.3	29.8
22.5	12	38.2	31.4

[a]For momentary currents and *X*/*R* values not shown in this table, the first and second major current peaks should be agreed on by the manufacturer and the user.

Copyright © 2000 IEEE. All rights reserved.
Copyright The Institute of Electrical and Electronics Engineers, Inc.
Provided by IHS under license with IEEE
No reproduction or networking permitted without license from IHS
Not for Resale

Annex A

(informative)

Recommended methods for determining the value of a sinusoidal current wave and a power-frequency recovery voltage

A.1 Current waves

A.1.1 Classification of current waves

The determination of the current interrupted by a circuit-interrupting device involves the measurement of the rms or effective values of sinusoidal waves. These waves may be divided into two groups, those that are symmetrical about the zero axis, and those that are asymmetrical with respect to the zero axis.

A.1.2 Symmetrical sinusoidal wave

The symmetrical sinusoidal wave has an rms value equal to the peak-to-peak value divided by 2.828. To determine the rms value at a given instant, draw the envelope of the current wave, determine from it the peak-to-peak value at the given instant, and divide by 2.828. See Figure A.1 for an example.

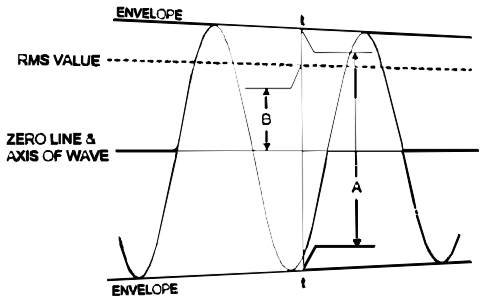

t is the time for which measurement was made
A is the peak-to-peak value
B is the rms value $\frac{A}{2.828}$

Figure A.1— Symmetrical sinusoidal current wave

A.1.3 Asymmetrical sinusoidal wave

The asymmetrical sinusoidal wave can be considered to be composed of two components—an alternating component and a direct component.

Copyright © 2000 IEEE. All rights reserved.

Copyright The Institute of Electrical and Electronics Engineers, Inc.
Provided by IHS under license with IEEE
No reproduction or networking permitted without license from IHS
Not for Resale

A.1.3.1 Measurement of the rms value

The measurement of the rms value is simplified by this conception of an asymmetrical wave, because the rms value of the wave is a function of these two components.

A.1.3.2 Alternating component

The alternating component has a peak-to-peak value equal to the distance between the envelopes, and it has an axis midway between the envelopes.

A.1.3.3 Direct component

The direct component has an amplitude equal to the displacement of the axis of the alternating component. See Figure A.2 for an example.

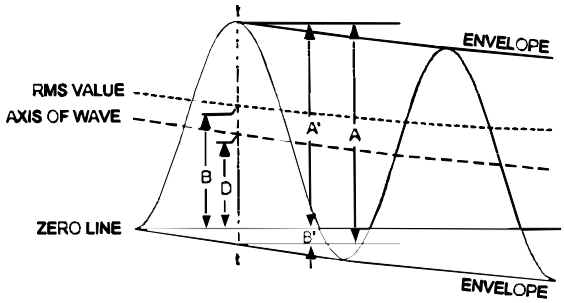

t is the time for which measurement was made
A is the peak-to-peak value of alternating component = A' + B'
D is the direct component = A' - (A/2)
A' is the major ordinate
B' is the minor ordinate

B is the rms value = $\sqrt{(\text{rms value of alternating current})^2 + (\text{Direct component})^2}$

$$= \sqrt{\left(\frac{A}{2.828}\right)^2 + D^2}$$

Figure A.2—Asymmetrical sinusoidal current wave

The direct use of the formula in Figure A.2 involves a considerable amount of calculation to determine the components and to combine them; however, it may be used to develop tables, charts, and scales by which the effective values are easily and quickly obtained.

A.2 Power-frequency recovery voltage

Power-frequency recovery voltage shall be determined from the envelope of each voltage wave at a point in time coincident with that peak that occurs more than 0.5 cycle, and not more than one cycle, after final arc extinction in the last phase to clear. The power-frequency recovery voltage for a three-phase short circuit shall be taken as the average of the three values obtained in this manner for the three voltage waves (see Figure A.3.)

Copyright © 2000 IEEE. All rights reserved.
Copyright The Institute of Electrical and Electronics Engineers, Inc.
Provided by IHS under license with IEEE
No reproduction or networking permitted without license from IHS
Not for Resale

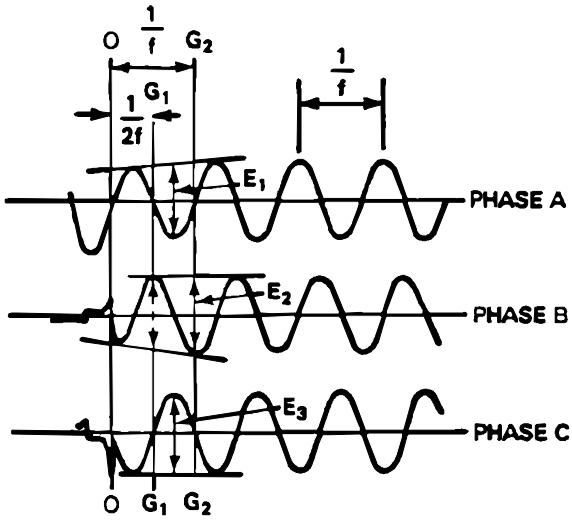

Phase A is the first to open circuit

OO is the instant of final arc extinction

$G_1\ G_1$ is the interval $\frac{1}{2f}$ from OO

$G_2\ G_2$ is the interval $\frac{1}{f}$ from OO

$\frac{1}{f}$ is equal to 1 period at system frequency

$\frac{E_1}{2.828}$ is normal-frequency recovery voltage, Phase A

$\frac{E_2}{2.828}$ is normal-frequency recovery voltage, Phase B

$\frac{E_3}{2.828}$ is normal-frequency recovery voltage, Phase C

Average normal-frequency recovery voltage

$$= \left(\frac{E_1}{2.828} + \frac{E_2}{2.828} + \frac{E_3}{2.828}\right) \div 3$$

NOTE—In Phase B, a voltage peak occurs exactly at interval $G_1\ G_1$. In such event, measurement is made at the later interval, G_2G_2.

Figure A.3—Determination of power-frequency recovery voltage

Copyright © 2000 IEEE. All rights reserved.

Copyright The Institute of Electrical and Electronics Engineers, Inc.
Provided by IHS under license with IEEE
No reproduction or networking permitted without license from IHS
Not for Resale

Annex B

(informative)

Recommended method for determining the equivalent steady-state rms current for plotting time-current curves

The current that melts a fuse in less than 1 s may contain a number of transients in the wave. The magnitude of these transients varies with each fuse operation, and the equivalent steady-state rms value of the current wave can be obtained only by evaluating each case individually. The following methods are recommended for fuse tests that fall into this class.

When the fuse melts during transient conditions, the area under the melting part of the current wave is integrated to determined the rms value of the wave. This value is then multiplied by the scale of the oscillogram to give the rms current.

When the fuse melts after transient conditions subside, the transient part of the wave is integrated as described in a) rms value of current wave to melting point, and the crest-to-crest height of the steady-state wave is measured. The two values obtained are combined as follows:

$$\left(\begin{array}{c}\text{rms value of current wave}\\ \text{to melting point}\end{array}\right) = \sqrt{\frac{\left[\begin{array}{c}\text{rms value of}\\ \text{transient part}\end{array}\right]^2 \left[\begin{array}{c}\text{Time of}\\ \text{transient part}\end{array}\right] + \left(\left[\frac{\text{crest-to-crest of steady-state portion}}{2\sqrt{2}}\right]^2 [\text{Time of steady-state part}]\right)}{\text{total time to melt}}}$$

Copyright © 2000 IEEE. All rights reserved.
Copyright The Institute of Electrical and Electronics Engineers, Inc.
Provided by IHS under license with IEEE
No reproduction or networking permitted without license from IHS
Not for Resale

Annex C

(informative)

Simplified fault-current calculation

C.1 Interrupting duty

To select the proper interrupting rating, it is necessary to calculate the maximum symmetrical fault current on the load side of the fuse and compare this value with the interrupting capability of the fuse. Most power fuses, distribution current-limiting fuses, and distribution cutouts are now rated by the manufacturer in terms of symmetrical current. A direct comparison can be made between the calculated values of fault current and the fuse rating. Many power fuses and distribution cutouts of earlier manufacture (pre-1970) were rated on the basis of asymmetrical current. For those fuses, multiplying factors shall be applied to the calculated fault current before a comparison can be made with the fuse ratings.

The multiplying factors to be applied depend on the system *X*/*R* ratios on the source side of the fuse. Some representative *X*/*R* ratios for application of the fuses on the systems are given in Tables 2, 3, 5, 6, 9, 12, and 15. For specific applications, where the *X*/*R* values are known, multiplying factors can be obtained from Figure C.1. Normally, the curve labeled “rms multiplication factor” will be used. Occasionally, the curve labeled “peak multiplication factor” is of interest during design testing.

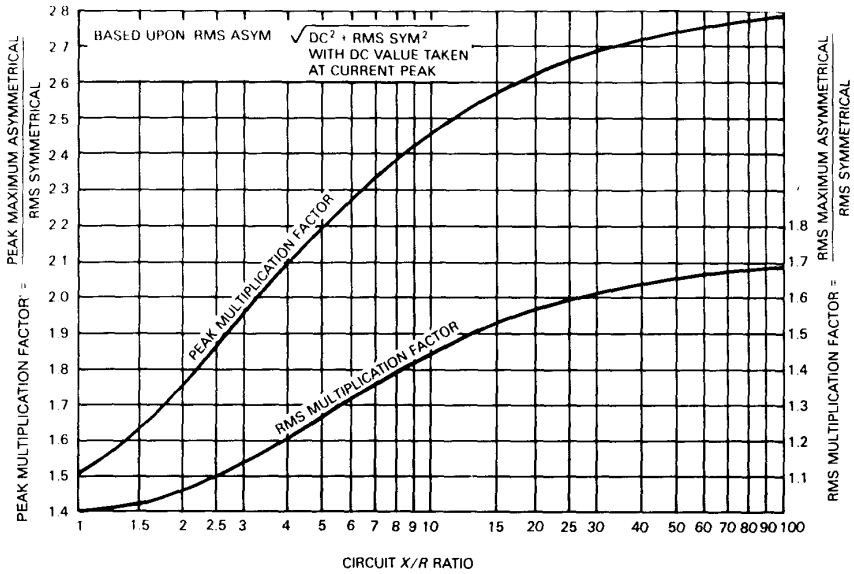

Figure C.1—Relation of X/R ratio to multiplication factor

C.2 Mechanical and momentary duty

For many purposes, it is necessary to know the maximum possible rms current (including both ac and dc components) that can flow in a circuit. Allowing for over-excitation of generators, the rms value of asymmetrical current, as calculated for faults initiated at voltage zero is about 1.8 times the symmetrical fault current. Because there will always be some decay, even in the first half cycle, a multiplier of 1.55 is acceptable.

Copyright © 2000 IEEE. All rights reserved.

Copyright The Institute of Electrical and Electronics Engineers, Inc.
Provided by IHS under license with IEEE
No reproduction or networking permitted without license from IHS Not for Resale

Annex D

(informative)

TRV parameters

Figure D.1 shows typical test circuits.

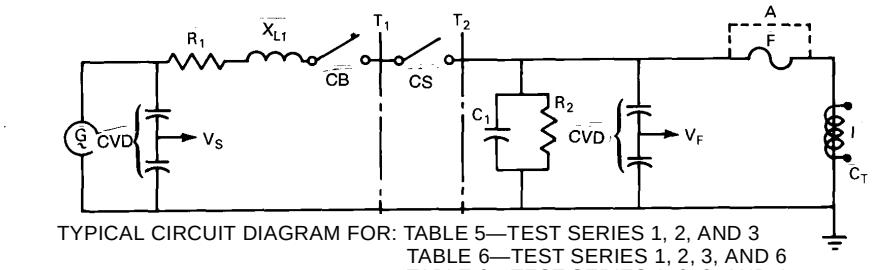

TYPICAL CIRCUIT DIAGRAM FOR: TABLE 5—TEST SERIES 1, 2, AND 3
TABLE 6—TEST SERIES 1, 2, 3, AND 6
TABLE 9—TEST SERIES 1, 2, 3, AND 4
TABLE 12—TEST SERIES 1 AND 2
TABLE 13—TEST SERIES 1

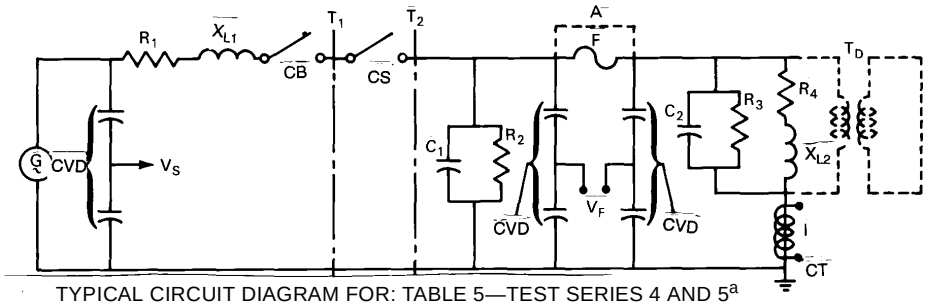

TYPICAL CIRCUIT DIAGRAM FOR: TABLE 5—TEST SERIES 4 AND 5[a]
TABLE 6—TEST SERIES 4 AND 5[a]
TABLE 9—TEST SERIES 5 AND 6[a]
TABLE 12—TEST SERIES 3[a]
TABLE 13—TEST SERIES 2[a]

[a]For these Test Series, C_2 may be required and its value is under consideration; R_3 is not required across X_{L2}. Iso, T_D may be used as an alternate to X_{L2} and R_4 and may have impedance connected between secondary terminals.

A	=	removable link used for the calibration test
CB	=	circuit breaker protecting the source
CS	=	closing switch
CT	=	current transformer or noninductive current shunt
CVD	=	capacitance voltage divider
C_1	=	transient recovery voltage frequency control for source
C_2	=	transient recovery voltage frequency control for load
F	=	fuse under test
G	=	generator
I	=	current measurement
X_{LI}	=	reactance for source
X_{L2}	=	reactance for load (see T_D)
R_1	=	resistance to control X/R ratio of source
R_2	=	damping resistance to control peak factor of source
R_3	=	damping resistance to control peak factor of load
R_4	=	resistance to control X/R ratio of load
T_D	=	distribution transformer with short-circuited secondary terminals (alternative to X_{L2} and R_4)
T_1, T_2	=	possible locations of transformers for tests at voltages higher than generator voltage
V_F	=	recovery voltage measurement
V_S	=	reference voltage measurement

NOTE—Damping circuits other than shown, for controlling the inherent TRV parameters of the test circuit, may be used by mutual agreement between manufacturer and test laboratory. Such use shall be noted and explained in the test report.

Figure D.1—Typical test circuits

Copyright © 2000 IEEE. All rights reserved.
Copyright The Institute of Electrical and Electronics Engineers, Inc.
Provided by IHS under license with IEEE
No reproduction or networking permitted without license from IHS
Not for Resale

D.1 Measurement of peak factor

Peak factor is the ratio of the first peak of the TRV to the instantaneous value of source voltage at the time of current zero, and is defined by

$$\text{Peak factor} = \frac{\text{first TRV peak}}{\sqrt{2} \times (\text{power-frequency recovery voltage}) \times [\sin(\arctan X/R)]}$$

This parameter is used in lieu of amplitude factor (the ratio of the first peak of the TRV to the peak value of the power-frequency recovery voltage) and is considered superior, especially when testing in circuits with low X/R ratios.

Peak factor may be measured by current-injecting the test circuit or, alternately, by conducting an actual fault-interrupting test using a low-arc-voltage interrupting device that does not distort the TRV. Either method, incidentally, can also be used to determined the frequency of the test circuit TRV.

The characteristic and use of current-injecting equipment shall be such as to not alter the inherent TRV characteristics of the circuit during measurement. For further information on such equipment, see D.2.

D.1.1 Measurement of peak factor by current injection

Peak factor is graphically determined from the TRV appearing across the open interrupting device when the circuit is current-injected at the point (see Figure D.2).

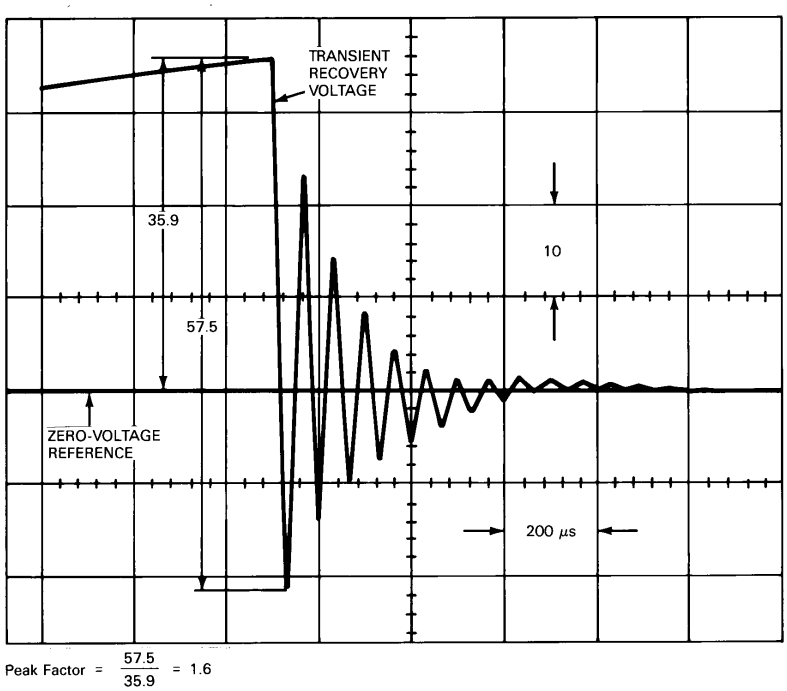

Figure D.2—Peak factor determination from current-injection test record

Copyright © 2000 IEEE. All rights reserved.

Copyright The Institute of Electrical and Electronics Engineers, Inc.
Provided by IHS under license with IEEE
No reproduction or networking permitted without license from IHS
Not for Resale

D.1.2 Measurement of peak factor by fault interruption

Peak factor is determined from the TRV record of an actual fault-interrupting test on a circuit employing a low-arc-voltage device that does not distort the TRV. (Peak factor cannot be determined from the TRV record of a test that uses a fuse cutout as the interrupting device, since cutouts typically distort the TRV.) (See Figure D.3.)

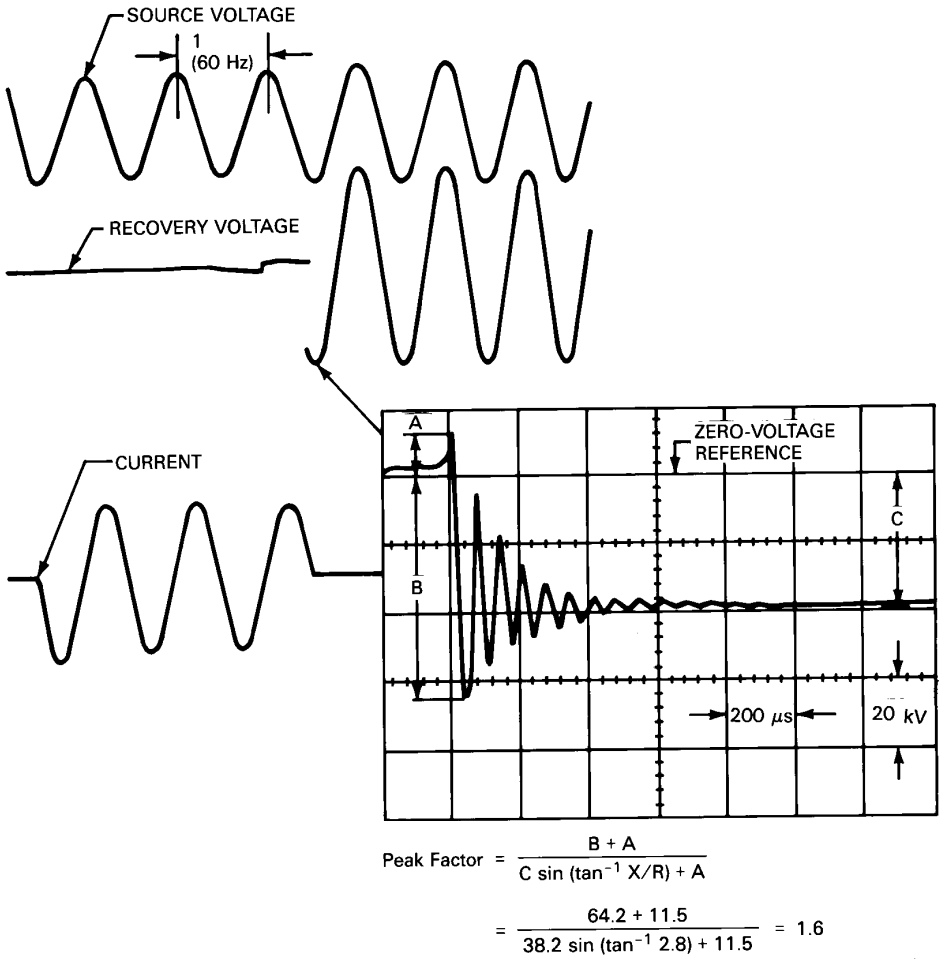

Figure D.3—Peak factor determination from fault-interruption test record

For this case, the first peak of the TRV is measured from the extinction peak as its starting point, as is the measurement of the instantaneous power-frequency recovery voltage at the time of current zero. The following equation shows the calculation:

$$\text{peak factor} = \frac{(\text{first TRV peak}) + (\text{extinction peak})}{\{\sqrt{2} \times \text{power-frequency recovery voltage} \times [\sin(\arctan \text{X/R})]\} + (\text{extinction peak})}$$

Copyright © 2000 IEEE. All rights reserved.
Copyright The Institute of Electrical and Electronics Engineers, Inc.
Provided by IHS under license with IEEE
No reproduction or networking permitted without license from IHS
Not for Resale

D.2 Bibliography

[B1] Hammarlund, P., "Transient Recovery Voltage Subsequent to Short-Circuit Interruption with Special Reference to Swedish Power System," *Proceedings,* no. 189, Royal Swedish Academy of Engineering Sciences, 1946.

[B2] Jackson, R. L., *Low Voltage Injection Equipment for Determining the Transient Response of Power System Plant,* Internal Laboratory Report, No. RD/L/R 1782, Central Electricity Research Laboratory, Leatherhead, England, February 1972.

[B3] Kotheimer, W. C., "A Method for Studying Circuit Transient Recovery Voltage Characteristics of Electric Power Systems," *AIEE Transactions,* vol. 74, pp. 1083–1086, 1955.

[B4] Sing-Yui-King, "Determination of Restriking Transients on Power Networks by a Half-Wave Injection Method," *JIEE,* Part II, p. 700, 1949.

Copyright © 2000 IEEE. All rights reserved.

Copyright The Institute of Electrical and Electronics Engineers, Inc.
Provided by IHS under license with IEEE
No reproduction or networking permitted without license from IHS Not for Resale