IEEE Std C37.34-1994
(Revision of IEEE Std C37.34-1971)

IEEE Standard Test Code for High-Voltage Air Switches

Sponsor
Switchgear Committee
of the
IEEE Power Engineering Society

Approved September 22, 1994
IEEE Standards Board

Abstract: Design test requirements for all high-voltage enclosed indoor and outdoor and non-enclosed indoor and outdoor air switches rated above 1000 V are specified. This includes requirements for such switches as disconnecting, selector, horn-gap, grounding, interrupter, etc., for manual and power operation, except for distribution-enclosed single-pole air switches and distribution cutouts fitted with disconnecting blades.
Keywords: corona, high-voltage air switches, ice breaking, indoor air switches, lightning impulse, mechanical operations, outdoor air switches, switching impulse

The Institute of Electrical and Electronics Engineers, Inc.
345 East 47th Street, New York, NY 10017-2394, USA

Copyright © 1995 by the Institute of Electrical and Electronics Engineers, Inc.
All rights reserved. Published 1995. Printed in the United States of America

ISBN 1-55937-468-3

No part of this publication may be reproduced in any form, in an electronic retrieval system or otherwise, without the prior written permission of the publisher.

--`,-`-`,,`,,`,`,,`---

Copyright The Institute of Electrical and Electronics Engineers, Inc.
Provided by IHS under license with IEEE
No reproduction or networking permitted without license from IHS
Not for Resale

IEEE Standards documents are developed within the Technical Committees of the IEEE Societies and the Standards Coordinating Committees of the IEEE Standards Board. Members of the committees serve voluntarily and without compensation. They are not necessarily members of the Institute. The standards developed within IEEE represent a consensus of the broad expertise on the subject within the Institute as well as those activities outside of IEEE that have expressed an interest in participating in the development of the standard.

Use of an IEEE Standard is wholly voluntary. The existence of an IEEE Standard does not imply that there are no other ways to produce, test, measure, purchase, market, or provide other goods and services related to the scope of the IEEE Standard. Furthermore, the viewpoint expressed at the time a standard is approved and issued is subject to change brought about through developments in the state of the art and comments received from users of the standard. Every IEEE Standard is subjected to review at least every five years for revision or reaffirmation. When a document is more than five years old and has not been reaffirmed, it is reasonable to conclude that its contents, although still of some value, do not wholly reflect the present state of the art. Users are cautioned to check to determine that they have the latest edition of any IEEE Standard.

Comments for revision of IEEE Standards are welcome from any interested party, regardless of membership affiliation with IEEE. Suggestions for changes in documents should be in the form of a proposed change of text, together with appropriate supporting comments.

Interpretations: Occasionally questions may arise regarding the meaning of portions of standards as they relate to specific applications. When the need for interpretations is brought to the attention of IEEE, the Institute will initiate action to prepare appropriate responses. Since IEEE Standards represent a consensus of all concerned interests, it is important to ensure that any interpretation has also received the concurrence of a balance of interests. For this reason IEEE and the members of its technical committees are not able to provide an instant response to interpretation requests except in those cases where the matter has previously received formal consideration.

Comments on standards and requests for interpretations should be addressed to:

Secretary, IEEE Standards Board
445 Hoes Lane
P.O. Box 1331
Piscataway, NJ 08855-1331
USA

IEEE Standards documents may involve the use of patented technology. Their approval by the Institute of Electrical and Electronics Engineers does not mean that using such technology for the purpose of conforming to such standards is authorized by the patent owner. It is the obligation of the user of such technology to obtain all necessary permissions.

Copyright The Institute of Electrical and Electronics Engineers, Inc.
Provided by IHS under license with IEEE
No reproduction or networking permitted without license from IHS
Not for Resale

Introduction

(This introduction is not a part of IEEE Std C37.34-1994, IEEE Standard Test Code for High-Voltage Air Switches.)

This publication is one of a series of seven standards (IEEE Std C37.30-1992 through IEEE C37.37-1979) on high-voltage air switches as follows:

IEEE Std C37.30-1992, IEEE Standard Requirements for High-Voltage Air Switches.

ANSI C37.32/D6/2-95, Schedules of Preferred Ratings, Construction Guidelines and Specifications for High-Voltage Air Disconnect Switches, Interrupter Switches, Fault Initiating Switches, Grounding Switches, Bus Supports, and Switch Accessories, Control Voltage Ranges.

ANSI C37.33-1987, High-Voltage Air Switches Rated Control Voltages and Their Ranges.

IEEE Std C37.34-1994, IEEE Standard Test Code for High-Voltage Air Switches.

IEEE Std C37.35-1976 (Reaff 1992), IEEE Guide for the Application, Installation, Operation, and Maintenance of High-Voltage Disconnecting and Load Interrupter Switches (ANSI).

IEEE Std C37.36b-1990, IEEE Guide to Current Interruption with Horn-Gap Air Switches (ANSI).

IEEE Std C37.37-1979 (Reaff 1993), IEEE Standard Loading Guide for AC High-Voltage Air Switches (in excess of 1000 volts) (ANSI).

This standard includes previously approved supplements that cover tests for ice breaking ability, mechanical operations, mechanical terminal loads, switching impulse, limits of corona and radio influence voltage as well as temperature limits for air switches.

This standard establishes a definition for corona, develops the concept of corona-free voltage, establishes the requirements for corona-free voltage, and the criteria for acceptance. The corona-free voltage is specified to be 1.10 times the line-to-neutral voltage equivalent of rated maximum voltage. Only visible corona is defined because this satisfies the majority of user requirements. Actual tests performed show satisfactory radio influence voltage (RIV) levels after the extinction of visible corona over the extremities of the device.

In the past, switches determined to be corona-free by the human eye accustomed to a darkened area have not been a source of radio or television interference. This standard, however, allows an alternate photographic corona test method where necessary.

Switch-mounting heights and proximity to other objects during tests have been limited so that they are representative of unfavorable operating conditions that could occur in a service location.

Tests require the switches to be free of visible corona at the corona extinction voltage because this voltage is lower than the corona starting voltage.

The specified ice tests are coordinated with IEC 129 (1984), which are intended for severe conditions of ice formation. The ice tests describe a method for natural environment (outdoor) testing. They establish criteria for acceptance, which are necessary to demonstrate compliance with the standard. Specific requirements have been added for manually-operated, power-operated, and fault-initiating switches.

The purpose of the mechanical operations test is to demonstrate the ability of a completely assembled switch to operate satisfactorily during its operating life expectancy.

Copyright The Institute of Electrical and Electronics Engineers, Inc.
Provided by IHS under license with IEEE
No reproduction or networking permitted without license from IHS
Not for Resale

Subclause 4.3 on the power frequency and lightning impulse open gap withstand voltage test has been revised to allow a bias test as an alternate to the standard test for switches rated 362 kV and above. Also, 4.4 on switching-impulse tests of extra-high voltage switches has been rewritten to utilize the test procedures contained in IEEE Std 4-1978 and IEC 129 (1984). The up-and-down method is used to establish phase-to-ground rated withstand voltage of the switch and the 3×9 test is used to verify the open gap withstand voltage. See annex A for background information.

The material was updated to conform with presently accepted standard conditions and switching-impulse wave shape. Also, the procedure for determining the maximum dispersion has been deleted, and a specific standard deviation is designated in case adequate test data is not available to determine the actual value.

To harmonize with IEC 129 (1984), the terms *peak withstand current* (formerly momentary current) and *short-time (symmetrical) withstand current* (formerly 3-s current) have been introduced. Also, a three-phase test is permitted on switches rated 48.3 kV and below to verify the peak withstand current rating of the switch.

Suggestions for improvement gained in the use of this standard will be welcome. They should be sent to the IEEE Standards Department.

The Standards Committee on Power Switchgear, C37, which reviewed and approved this standard, had the following personnel at the time of approval:

E. Byron, *Chair*
M. Calwise, *Secretary*
A. K. McCabe, *(Executive Vice-Chair of High-Voltage Switchgear Standards)*
J. C. Scott, *(Executive Vice-Chair of Low-Voltage Switchgear Standards)*
D. L. Swindler, *(Executive Vice-Chair of IEC Activities)*

Organization Represented	***Name of Representative***
Association of Iron and Steel Engineers	(vacant)
Electric Light and Power Group	M. C. Mingoia D. J. Borchart T. E. Buck J. H. Provenzana J. D. Stewart G. R. Brandenberger (*Alt*) A. K. McCabe (*Alt*)
Institute of Electrical and Electronics Engineers	D. F. Peelo L. R. Beard H. L. Bowles P. W. Dwyer A. Monroe D. Signon S. C. Atkinson (*Alt*) D. G. Kumbera (*Alt*) L. V. McCall (*Alt*)
National Electrical Manufacturers Association	R. Garzon W. Kracht H. L. Miller T. Olson S. Stone E. Byron (*Alt*) G. T. Jones (*Alt*) G. Sakats (*Alt*) D. L. Swindler (*Alt*)
Tennessee Valley Authority	D. N. Reynolds

Copyright The Institute of Electrical and Electronics Engineers, Inc.
Provided by IHS under license with IEEE
No reproduction or networking permitted without license from IHS
Not for Resale

Organization Represented	*Name of Representative*
Testing Laboratory Group	L. Frier P. Notarian
U.S. Department of the Army, Office of the Chief of Engineers	J. A. Gilson
U.S. Department of the Interior, Bureau of Reclamation	R. Arnold
U.S. Department of the Navy, Naval Construction Battalion Center	R. L. Clark
Western Area Power Administration	G. D. Birney

The Working Group on Air Switches of the High-Voltage Switches Subcommittee of the IEEE Switchgear Committee, which prepared this standard, had the following members at the time of approval:

A. Dixon, *Chair*
P. L. Kolarik, *(Task Force Chair)*

C. J. Ahrano	E. Hornung	M.Puccinelli
A. K. Alsaker	C. R. Isaac	J. C. W. Ransom
L. Bennett	D. Lott	D. N. Reynolds
H. L. Bowles	E. L. Luehring	L. R. Saavedra
R. A. Brown	P. C. Mayo	D. N. Sharma
L. V. Chabala	M. S. McGuire	C. A. Schwalbe
R. J. Gavazza	D. C. Mills	C. Sotelo
	A. C. Monroe	

The High-Voltage Switches Subcommittee of the IEEE Switchgear Committee that reviewed and approved this standard had the following membership:

Harvey L. Bowles, *Chair*
A. C. Monroe, *Vice Chair*

C. J. Ahrano	J. Lafontaine	M. Puccinelli
R. W. Alexander	D. Lott	J. C. W. Ransom
A. K. Alsaker	E. L. Luehring	D. N. Reynolds
L. V. Chabala	P. C. Mayo	R. J. Reynolds
A. Dixon	M. S. McGuire	A. B.Rishworth
K. D. Hendrix	D. C. Mills	C. A. Schwalbe
C. R. Isaac	R. P. O'Leary	C. Sotelo

Copyright The Institute of Electrical and Electronics Engineers, Inc.
Provided by IHS under license with IEEE
No reproduction or networking permitted without license from IHS
Not for Resale

The following persons were on the balloting committee:

R. J. Alton	D. G. Kumbera	R. K. Ranjan
R. H. Arndt	S. R. Lambert	J. C. W. Ransom
S. C. Atkinson	D. M. Larson	J. E. Reed
L. R. Beard	W. E. Laubach	D. N. Reynolds
H. L. Bowles	J. G. Leach	A. B. Rishworth
M. T. Brown	G. N. Lester	H. C. Ross
J. H. Brunke	D. L. Lott	T. E. Royster
C. G. Burland	E. L. Luehring	W. R. Rueth
F. R. Cameron	P. C. Mayo	L. R. Saavedra
R. L. Capra	A. K. McCabe	L. H. Schmidt
A. Dixon	L. V. McCall	E. W. Schmunk
J. J. Dravis	M. S. McGuire	C. A. Schwalbe
C. J. Dvorak	W. C. McKay	D. N. Sharma
P. W. Dwyer	H. W. Mikulecky	H. M. Smith
R. D. Garzon	D. C. Mills	G. St. Jean
L. W. Gaussa, Sr.	G. F. Montillet	D. L. Swindler
K. I. Gray	F. Muench	J. S. Tannery
K. D. Hendrix	J. F. O'Donnell	S. H. Telander
H. L. Hess	R. P. O'Leary	F. C. Teufel
W. F. Hoenigmann	A. F. Parks	T. J. Tobin
J. M. Jerabek	D. F. Peelo	E. F. Veverka
P. L. Kolarik	G. O. Perkins	C. L. Wagner

When the IEEE Standards Board approved this standard on September 22, 1994, it had the following membership:

Wallace S. Read, *Chair*
Donald C. Loughry, *Vice Chair*
Andrew G. Salem, *Secretary*

Gilles A. Baril	Donald N. Heirman	D. N. “Jim” Logothetis
Bruce B. Barrow	Richard J. Holleman	L. Bruce McClung
José A. Berrios de la Paz	Jim Isaak	Marco W. Migliaro
Clyde R. Camp	Ben C. Johnson	Mary Lou Padgett
James Costantino	Sonny Kasturi	Arthur K. Reilly
Stephen L. Diamond	Lorraine C. Kevra	Ronald H. Reimer
Donald C. Fleckenstein	E. G. “Al” Kiener	Gary S. Robinson
Jay Forster*	Ivor N. Knight	Leonard L. Tripp
Ramiro Garcia	Joseph L. Koepfinger*	

*Member Emeritus

Also included are the following nonvoting IEEE Standards Board liaisons:

Satish K. Aggarwal	Richard B. Engelman	Robert E. Hebner
James Beall		David E. Soffrin

Rochelle L. Stern
IEEE Standards Project Editor

Copyright The Institute of Electrical and Electronics Engineers, Inc.
Provided by IHS under license with IEEE
No reproduction or networking permitted without license from IHS
Not for Resale

CLAUSE PAGE

1. Overview 1

1.1 Scope 1
1.2 References 1

2. Definitions 2

3. Design tests 3

4. Dielectric withstand voltage tests 3

4.1 Power-frequency withstand voltage tests 3
4.2 Lightning impulse dry withstand voltage tests 4
4.3 Power frequency and lightning impulse open gap withstand voltage test 6
4.4 Switching-impulse voltage tests of extra-high-voltage switches 7

5. Radio-influence and corona tests 10

5.1 Simultaneous tests 10
5.2 Radio-influence tests 10
5.3 Corona tests 11

6. Temperature rise test 13

6.1 General 13
6.2 Mounting 13
6.3 Switch connections 13
6.4 Method of temperature determination 15
6.5 Ambient temperature during test 15
6.6 Measurement of ambient temperature 15
6.7 Duration of temperature rise test 16
6.8 Criteria for acceptance 16

7. Switch performance tests 16

7.1 Conditions of test 16
7.2 Ambient temperature during test 16
7.3 Duration of switch performance test 17
7.4 Criteria for acceptance 17

8. Tests for peak withstand and short-time (symmetrical) withstand current ratings 17

8.1 Equipment 17
8.2 Mounting 17
8.3 Switch connections 17
8.4 Test durations 18
8.5 Measurement of current 18
8.6 Condition of switch after test 18

9. Interrupting tests 18

9.1 Load current interrupting tests 18

--`,,`,,`-`-`,,`,,`,`,,`---

Copyright The Institute of Electrical and Electronics Engineers, Inc.
Provided by IHS under license with IEEE
No reproduction or networking permitted without license from IHS
Not for Resale

CLAUSE PAGE

9.2 Excitation current interrupting tests 19
9.3 Capacitive current switching tests 19
9.4 Condition of switch after test 21

10. Ice tests 22

10.1 General 22
10.2 Study of ice formation 22
10.3 Test methods 22
10.4 Test conditions 23
10.5 Test procedure 24
10.6 Criteria for acceptance 25

11. Mechanical operations test 25

11.1 General 25
11.2 Test arrangement 26
11.3 Test procedure 26
11.4 Criteria for acceptance 27

Annex A (informative) Background information 28

Annex B (informative) Bibliography 30

Copyright The Institute of Electrical and Electronics Engineers, Inc.
Provided by IHS under license with IEEE
No reproduction or networking permitted without license from IHS
Not for Resale

IEEE Standard Test Code for High-Voltage Air Switches

1. Overview

1.1 Scope

This standard summarizes various design tests that shall be made on all types of high-voltage enclosed indoor or outdoor and non-enclosed indoor or outdoor air switches, and describes accepted methods used in making these tests.

For tests on apparatus insulators, see ANSI C29.1-1988.[1] High-voltage air switches in IEEE Std C37.20.2-1987, IEEE Std C37.20.3-1987, IEEE Std C37.71-1984, and ANSI C37.72-1987 are not covered by this standard.

1.2 References

This standard shall be used in conjunction with the following publications. When these standards are superseded by an approved revision, the revision shall apply.

Accredited Standards Committee C2-1993, National Electrical Safety Code (NESC).[2]

ANSI C29.1-1988, Test Methods for Electrical Power Insulators.[3]

ANSI C29.8-1985, Wet-Process Porcelain Insulators (Apparatus, Cap and Pin Type).

ANSI C29.9-1983, Wet-Process Porcelain Insulators (Apparatus, Post Type).

ANSI C37.32/D6/2-95, Schedules of Preferred Ratings, Construction Guidelines and Specifications for High-Voltage Air Disconnect Switches, Interrupter Switches, Fault Initiating Switches, Grounding Switches, Bus Supports, and Switch Accessories, Control Voltage Ranges.[4]

---

[1]Information on references can be found in 1.2.
[2]The NESC is available from the Institute of Electrical and Electronics Engineers, 445 Hoes Lane, P.O. Box 1331, Piscataway, NJ 08855-1331, USA.
[3]ANSI publications are available from the Sales Department, American National Standards Institute, 11 West 42nd Street, 13th Floor, New York, NY 10036, USA.
[4]As this standard goes to press, ANSI C37.32/D6/2-95 was not published; however, the draft is available from the National Electrical Manufacturers Association (NEMA) , 2101 L Street NW, Washington, DC 20037, USA.

Copyright © 1995 IEEE All Rights Reserved

--`,,`-`-`,,`,,`,`,,`---

Copyright The Institute of Electrical and Electronics Engineers, Inc.
Provided by IHS under license with IEEE
No reproduction or networking permitted without license from IHS
Not for Resale

ANSI C37.72-1987, Manually-Operated, Dead-Front Padmounted Switchgear with Load Interrupting Switches and Separable Connectors for Alternating-Current Systems.

ANSI C63.2-1987, American National Standard Electromagnetic Noise and Field Strength, 10 kHz to 40 GHz—Specifications.

IEEE Std 4-1978, IEEE Standard Techniques for High-Voltage Testing (ANSI).[5]

IEEE Std 119-1974, IEEE Recommended Practice for General Principles of Temperature Measurement as Applied to Electrical Apparatus.[6]

IEEE Std C37.09-1979 (Reaff 1988), IEEE Standard Test Procedure for AC High-Voltage Circuit Breakers Rated on a Symmetrical Current Basis (ANSI).

IEEE Std C37.20.2-1993, IEEE Standard for Metal-Clad and Station-Type Cubicle Switchgear (ANSI).[7]

IEEE Std C37.20.3-1987 (Reaff 1992), IEEE Standard for Metal-Enclosed Interrupter Switchgear (ANSI).

IEEE Std C37.30-1992, IEEE Standard Requirements for High-Voltage Air Switches (ANSI).

IEEE Std C37.34e-1979, IEEE Standard for Switching-Impulse Testing of Extra High-Voltage Switches, Supplement to IEEE Std C37.34-1971 (ANSI).

IEEE Std C37.71-1984 (Reaff 1990), IEEE Standard for Three-Phase Manually Operated Subsurface Load-Interrupting Switches for AC Systems (ANSI).

IEEE Std C37.100-1992, IEEE Standard Definitions for Power Switchgear (ANSI).

NEMA 107-1987, Methods of Measurement of Radio Influence Voltage (RIV) of High-Voltage Apparatus.

2. Definitions

The definitions of terms contained in this document, or in other standards referred to in this document, are not intended to embrace all legitimate meanings of the terms. They are applicable only to the subject treated in this standard. For additional definitions, see IEEE Std C37.100-1992.

2.1 lightning impulse dry withstand voltage: The crest value of a voltage impulse with a front duration from less than one to a few tens of microseconds that, under specified conditions, can be applied without causing flashover or puncture.

2.2 loadability (of an air switch): The ratio of allowable continuous current at 25° C ambient temperature to rated continuous current.

2.3 power frequency: The frequency at which a device or system is designed to operate.

2.4 peak withstand current (of an air switch): The crest value of the total current during the maximum cycle that a switch is required to carry at rated frequency.

2.5 short-time (symmetrical) withstand current (of an air switch): The current carried by a device, an assembly, or a bus for a specified short-time interval.

[5]IEEE Std 4-1978 has been withdrawn; however, copies can be obtained from the IEEE Standards Department, 445 Hoes Lane, P.O. Box 1331, Piscataway, NJ 08855-1331, USA.
[6]IEEE Std 119-1974 has been withdrawn; however, copies can be obtained from the IEEE Standards Department.
[7]IEEE publications are available from the Institute of Electrical and Electronics Engineers.

Copyright © 1995 IEEE All Rights Reserved

Copyright The Institute of Electrical and Electronics Engineers, Inc.
Provided by IHS under license with IEEE
No reproduction or networking permitted without license from IHS Not for Resale

2.6 switching impulse withstand voltage: The crest value of a voltage impulse with a front duration from tens to thousands of microseconds that, under specified conditions, can be applied without causing flashover or puncture.

2.7 visible corona (as applies to an air switch): A luminous discharge due to ionization of the air surrounding an air switch, caused by a voltage gradient exceeding a certain critical value.

3. Design tests

Design tests are those made to determine the adequacy of the particular type, style, or model of equipment with its component parts to meet its assigned rating and to operate satisfactorily under normal service conditions or under special conditions, if specified.

Design tests are made only on representative apparatus to substantiate the ratings assigned to all other apparatus of the same basic design. These tests are not intended to be used as a part of normal production. The applicable portion of these design tests may also be used to evaluate modifications of a design and to assure that performance has not been adversely affected. Test data from previous similar designs may be used for current designs, where appropriate.

The following clauses establish physical and electrical conditions for tests and methods of determining test parameters.

4. Dielectric withstand voltage tests

Dielectric withstand voltage tests are performed to verify the voltage withstand capability of the switch with specified magnitudes and wave shapes of test voltage applied under specified test conditions. All test voltages are to be corrected to standard atmospheric conditions per IEEE Std 4-1978.

4.1 Power-frequency withstand voltage tests

4.1.1 Power-frequency dry withstand voltage test

The test voltage shall be the rated power-frequency dry withstand voltage and shall be applied to the specimen for 1 min without flashover and/or damage to the insulating material. Preferred ratings for all switches are given in ANSI C37.32/D6/2-95.

4.1.2 Power-frequency wet withstand voltage test

The test voltage shall be the rated power-frequency wet withstand voltage and shall be applied to the specimen for 10 s without flashover and/or damage to the insulating material. Preferred ratings are given in column 4 of table 1 in ANSI C37.32/D6/2-95 for non-enclosed outdoor switches.

4.1.3 Power-frequency dew withstand voltage test

The test voltage shall be the rated power-frequency dew withstand voltage and shall be applied to the specimen for 10 s without flashover and/or damage to the insulating material. Preferred ratings for all switches are given in ANSI C37.32/D6/2-95.

4.1.4 Voltage application for power-frequency dry and wet withstand voltage tests

Seventy-five percent of the rated power-frequency dry and wet withstand voltage may be applied in one step and gradually raised to the required value in neither less than 5 s nor more than 30 s.

Copyright © 1995 IEEE All Rights Reserved

Copyright The Institute of Electrical and Electronics Engineers, Inc.
Provided by IHS under license with IEEE
No reproduction or networking permitted without license from IHS Not for Resale

4.1.5 Voltage application for power-frequency dew withstand voltage test

The voltage shall be raised rapidly to the rated power-frequency dew withstand test voltage in not more than 20 s.

4.1.6 Frequency and wave shape of the power-frequency withstand test voltage

The frequency of the test voltage shall be within ± 20% of the rated frequency of the device being tested. A sine wave of acceptable shape shall be applied to the device. The test shall be made with alternating voltage having a crest value equal to 1.414 times the specified test voltage.

4.1.7 Mounting of specimen

The switch base shall be grounded or mounted on a grounded metal supporting structure.

4.1.8 Measurement of voltage

The voltage for dielectric tests shall be measured in accordance with IEEE Std 4-1978.

4.1.9 Points of application of voltage

Multi-pole switches mounted on a common base with or without barriers between poles, shall be tested as follows:

a) With the switch closed and base grounded, simultaneously apply the test voltage to all terminals on one side of the switch.
b) With the switch open and base grounded, apply voltage to one terminal of one pole with the other terminals grounded. Repeat the test using opposite terminal of the same pole. On non-enclosed three-pole or four-pole switches, the voltage shall be applied to an interior pole; however, on enclosed switches, each pole shall be tested.
c) With the switch closed, apply voltage to one pole with the terminals of other poles and the base grounded. On three-pole or four-pole switches, the voltage shall be applied to an interior pole.

A multi-pole switch having separately mounted poles shall have tests performed only on a single pole, as follows:

a) With the switch open, the test voltage shall be successively applied between each terminal and the grounded metal parts, including the base, with the other terminal connected to the ground.
b) With the switch closed, the test voltage shall be applied between the live and the grounded metal parts, including the base.

4.1.10 Wet withstand voltage test standards, water resistivity, and rate of precipitation

Wet tests shall be made in accordance with IEEE Std 4-1978.

4.1.11 Dew withstand voltage test standards

The dew withstand voltage test, preparation of test specimen, and mounting arrangement shall be made in accordance with 4.6 of ANSI C29.1-1988.

4.2 Lightning impulse dry withstand voltage tests

4.2.1 Full wave voltage test

The test voltage shall be the rated 1.2 × 50 μs full wave lightning impulse dry withstand voltage. Preferred ratings for all switches are given in column 2 of table 1 in ANSI C37.32/D6/2-95. Test voltages of positive and negative polarities

Copyright © 1995 IEEE All Rights Reserved

Copyright The Institute of Electrical and Electronics Engineers, Inc.
Provided by IHS under license with IEEE
No reproduction or networking permitted without license from IHS Not for Resale

shall be applied to the specimen unless it can be demonstrated that one polarity produces lower results, in which case that polarity can be used. Usually, the positive polarity produces the lower critical withstand voltage.

4.2.2 Mounting of specimen

The switch base shall be grounded or mounted on a grounded metal supporting structure.

4.2.3 Conductors for use in tests

In the absence of specific information, a conductor of the size normally used with the switch shall be connected to each terminal and shall extend horizontally for at least 1 times the switch open-gap dimension. These conductors may be terminated with suitable shielding to prevent flashover from their ends.

4.2.4 Proximity of other objects

The switch shall be mounted in an environment free from objects that can significantly distort the electric field distribution. Grounded metallic objects should be no closer to energized parts of the switch assembly than 1.5 times the switch open-gap dimension. If insulating barriers are used between live parts and grounded metallic objects, for example, between the outside pole and the switch enclosure, the 1.5 times the open gap dimension does not have to be maintained.

4.2.5 Wave shape and tolerances

The impulse voltage test wave shape shall be as described in 2.4.2.1 and 2.4.2.2 in IEEE Std 4-1978, and shall have the following limits for design tests:

a) A virtual front time based on the rated full wave impulse voltage, equal to or less than 1.2 μs
b) A crest voltage equal to or exceeding the rated full wave impulse voltage
c) A time to 50% of the crest voltage value, equal to or greater than 50 μs

For switches designed and tested prior to the issuance of this requirement (1971), the lightning impulse voltage wave shape was 1.5 40 μs. The manufacturer has the option of assigning a 1.2×50 μs rating on the basis of a prior design test with a –20% tail tolerance (time to 50% of crest voltage).

4.2.6 Points of application of voltage

Single-pole and multi-pole switches with or without barriers between poles and with or without a common base shall be tested as follows:

a) With the switch closed and base(s) grounded, the test voltage to all terminals on one side of the switch shall be simultaneously applied.
b) With the switch open and base(s) grounded, the voltage shall be applied to one terminal of one pole with the other terminals grounded. The test shall be repeated using opposite terminal of the same pole. On non-enclosed three-pole or four-pole switches, the voltage shall be applied to an interior pole. However, on enclosed switches, each pole shall be tested.

4.2.7 Number of tests

The impulse voltage shall be applied three consecutive times and if no disruptive discharge occurs, the switch shall be considered as having passed the test. If two or three of the applied impulse waves cause disruptive discharges, the switch shall be considered to have failed the test. If only one of the three applied impulses causes a disruptive discharge, nine additional consecutive impulses shall be applied. If a disruptive discharge does not occur on any of these nine additional impulses, the switch shall be considered as having passed the test.

Copyright © 1995 IEEE All Rights Reserved

Copyright The Institute of Electrical and Electronics Engineers, Inc.
Provided by IHS under license with IEEE
No reproduction or networking permitted without license from IHS Not for Resale

4.2.8 Measurement of voltage

The voltage for dielectric tests shall be measured in accordance with IEEE Std 4-1978.

4.3 Power frequency and lightning impulse open gap withstand voltage test

The purpose of the test is to verify that an open switch is capable of withstanding the rated dielectric voltages between live parts forming the open gap(s).

Successful completion of the test does not necessarily provide assurance that an open switch will always flash over to ground instead of across the open gap. Where surge protection of the gap is required, switch insulators can be equipped with rod gaps or similar protective devices.

There are two satisfactory test procedures for demonstrating the open gap withstand capability of a switch—the standard test defined in 4.3.1 and a bias test defined in 4.3.2. However, the bias test shall be limited to switches rated 362 kV and above. A switch passing either test procedure meets the intended requirements. However, a switch passing one test does not guarantee that the switch will pass the other test. Only one pole of a multi-pole switch is required to be tested if all poles are identical; otherwise, each pole that is unique to the switch shall be tested.

4.3.1 Standard test

4.3.1.1 Mounting arrangement

4.3.1.1.1 Switches rated above 48.3 kV

The switch base shall be grounded or mounted on a grounded metal supporting structure. If the switch design uses cap and pin insulator units (see ANSI C29.8-1985), one or more insulator units, identical to those supporting the current-carrying parts, shall be added to each of the insulator supports or columns. Where post type insulator units are used (see ANSI C29.9-1983), post type insulators having the next higher voltage rating shall be substituted.

If the increase of the insulator length results in a change in the air gap(s) between the live parts (such as “V” type designs), the above described procedure *does not apply*. In those cases, the switch shall be mounted with its base insulated from ground by means of insulator units of no greater height than those mounted on the switch.

4.3.1.1.2 Switches rated 48.3 kV and below

The switch shall be mounted with its base insulated from a grounded metal structure by means of the insulator units identical to those supporting the current-carrying parts of the switch. In the case of a rear connected indoor switch, bus support insulators of equivalent electrical characteristics shall be used to support the base.

4.3.1.2 Test procedure

With the switch in the fully open position, the following test series shall be applied:

a) A test voltage 10% higher than the rated 1 min power frequency withstand voltage shall be applied individually to each terminal of a single pole with the other terminal and the base of the pole grounded.
b) A test voltage 10% higher than the rated 1.2×50 μs lightning impulse dry withstand voltage shall be applied. A total of six impulses shall be applied to each terminal of the switch pole—three of positive polarity and three of negative polarity—with the other terminal and the base of the pole grounded.

4.3.1.3 Criteria for acceptance

The switch shall be considered to have passed the test if

Copyright © 1995 IEEE All Rights Reserved

Copyright The Institute of Electrical and Electronics Engineers, Inc.
Provided by IHS under license with IEEE
No reproduction or networking permitted without license from IHS Not for Resale

a) During the application of the power-frequency withstand voltage, no flashover across the open gap or to ground occurs and there is no damage to the switch pole.
b) During the three applications of each polarity of the rated lightning impulse withstand voltage, no flashovers occur across the open gap. If only one flashover across the open gap occurs during the three impulses, nine additional consecutive impulses shall be applied. If a disruptive discharge does not occur on any of these nine additional impulses, the switch shall be considered to have passed the test. A flashover to ground during the 3×9 series shall be considered as a non-event and another impulse shall be applied. No more than one flashover to ground shall be permitted during each series of the 3×9 tests.

4.3.2 Bias test

A bias test is an acceptable alternate only for the standard lightning impulse withstand voltage test for switches rated 362 kV and above [see 4.3.1.2 b)]. It is also necessary to perform the power frequency withstand voltage test specified in item a) of 4.3.1.2 on switches rated 362 kV and above.

4.3.2.1 Mounting arrangement

The switch shall be mounted on its normal complement of insulators and the base shall be grounded.

4.3.2.2 Test procedure

The test shall be performed on an open pole of the switch with one terminal energized at a percentage of the line-to-neutral voltage equivalent of the rated maximum voltage and the other terminal impulsed with the rated 1.2 50 μs lightning impulse dry withstand voltage of positive and negative polarity (see columns 2 and 3 of table 1 in ANSI C37.32/D6/2-95 for test values). The instant of each impulse voltage application shall be synchronized in such a way that the crest of each impulse wave coincides with the crest of the 60 Hz half-wave of opposite polarity. The total voltage impressed across the open gap shall be equal to or greater than the voltage applied during the standard test procedure defined in item b) of 4.3.1.2.

4.3.2.2.1 Number of tests

A total of six impulses, three of positive polarity and three of negative polarity, shall be applied to one terminal of the switch pole with the opposite terminal energized at a 60 Hz voltage. The test shall be repeated by applying the test voltages to the opposite terminals of the open pole.

4.3.2.2.2 Criteria for acceptance

The switch shall be considered to have passed the test if no flashovers occur across the open gap during the simultaneous applications of the 60 Hz voltage to one terminal and the three positive polarity and three negative polarity impulse voltages to the other terminal of the open pole. If only one flashover occurs across the open gap during the first three impulses of a given polarity, nine additional consecutive impulses shall be applied for each series that experienced a flashover. If a disruptive discharge does not occur on any of these nine additional impulses, the switch shall be considered to have passed the test.

A flashover to ground during a 3×9 series shall be considered as a nonevent and another impulse shall be applied. No more than one flashover to ground shall be permitted during each 3×9 series of tests.

4.4 Switching-impulse voltage tests of extra-high-voltage switches

4.4.1 Equipment to be tested

Outdoor air switches with rated maximum voltage of 362 kV and above may be required to withstand long-duration switching-surge voltages. The test procedures described herein are basically intended to be for the design of

Copyright © 1995 IEEE All Rights Reserved

Copyright The Institute of Electrical and Electronics Engineers, Inc.
Provided by IHS under license with IEEE
No reproduction or networking permitted without license from IHS Not for Resale

uncontaminated insulation. A switching-impulse test for contaminated insulation is premature considering the present state of the art. Tests may be conducted on single-pole units in accordance with the following paragraphs.

A “switching-impulse” is defined in IEEE Std 4-1978 as an intentionally applied wave, whereas “switching-surge” is the oscillatory wave seen in service.

It is not necessary to retest equipment previously tested and found acceptable in accordance with IEEE Std C37.34e-1979, wherein the test wave had a 70 μs to 250 μs front and decayed to one-half value in not less than 3000 μs (see 4.4.6).

4.4.2 Mounting arrangement

The base of the single-pole switch to be tested shall be mounted at the minimum expected service height above a ground plane that extends in all directions from the outline of the switch base for a distance of at least twice the switch open-gap dimension. In the absence of specific information, the mounting height measured from the lowest point on the switch insulators shall be not more than 2438 mm (8 ft) above the ground plane for 362 kV equipment, 3658 mm (12 ft) above the ground plane for 550 kV equipment, and 4877 mm (16 ft) above the ground plane for 800 kV equipment.

4.4.3 Conductors for use in tests

In the absence of specific information, a conductor of the size normally used with the switch shall be connected to each terminal and shall extend horizontally for at least 1 times the switch open-gap dimension. These conductors may be terminated with suitable shielding to prevent flashover from their ends.

4.4.4 Proximity of other objects

The switch shall be mounted in an environment free from objects that can significantly distort the electric field distribution. Grounded metallic objects should be no closer to energized parts of the switch assembly than 1.5 times the switch open-gap dimension.

4.4.5 Points of application of voltage

Dielectric characteristics shall be determined by the application of positive and negative switching-impulse voltages as follows:

a) With the switch closed and dry, test voltages shall be applied between the energized parts and the grounded metal parts, including the base.
b) With the switch open and dry, test voltages shall be successively applied between each terminal and grounded metal parts, including the base with the other terminal connected to ground.
c) The above tests in a) and b) shall be repeated under wet conditions in accordance with IEEE Std 4-1978.

4.4.6 Wave shape for switching-impulse withstand voltage tests

The switching-impulse voltage wave is a 250/2500 μs impulse as described in 2.5.1.3, 2.5.1.4, and 2.5.2.3 of IEEE Std 4-1978.

4.4.7 Determination of withstand voltage

The withstand voltage of a switch can be determined by the up-and-down method as follows and as outlined in 2.4.3.2.2 of IEEE Std 4-1978.

A voltage V_k is chosen which is thought to be approximately equal to the 50% disruptive-discharge level. A voltage interval ΔV, approximately 3% of V_k, is also chosen. One impulse is applied at the voltage V_k. If this does not result

Copyright © 1995 IEEE All Rights Reserved

Copyright The Institute of Electrical and Electronics Engineers, Inc.
Provided by IHS under license with IEEE
No reproduction or networking permitted without license from IHS Not for Resale

in a disruptive discharge, the next impulse shall have the level $V_k + \Delta V$. If a disruptive discharge occurs at the level V_k, the next impulse shall have a level $V_k - \Delta V$.

This procedure is continued, the level of each subsequent impulse being determined by the result of the previous one until a sufficient number of observations have been recorded. The number of impulses N_v, applied at each level V_v, are then counted, and the 50% disruptive-discharge voltage is determined by

$$V_{50} = \frac{\Sigma N_v V_v}{\Sigma N_v}$$

In this equation, ΣN_v shall be at least equal to or greater than 20. The first level taken into account shall be one at which two or more impulses were applied. This avoids any appreciable error if the chosen V_k is much too high or much too low. If a better accuracy is required in the determination of the 50% disruptive-discharge voltage, the number of voltage applications shall be increased, but generally does not have to be higher than 40. For special cases in which the standard deviation is smaller, it may also be necessary to decrease ΔV.

The withstand voltage, two standard deviations below the 50% (critical) flashover voltage, can be determined from the following formula:

$$V_w = \frac{V_{50}(100 - 2D)}{100}$$

where

V_w is the rated withstand voltage
V_{50} is the 50% (critical) flashover voltage
D is the standard deviation (in percent)

It is recommended that 6% be used for the standard deviation unless test data is available to demonstrate that a probability of flashover curve with a slope other than 6% more accurately represents the dielectric performance of the apparatus. The withstand voltage determined from the foregoing formula provides a 97.7% probability that the assigned withstand voltage will not cause insulation flashover. The withstand voltage shall always be published together with the 50% (critical) flashover voltage so that interpolations for other probabilities can be made.

4.4.8 Switching impulse voltage open-gap withstand voltage test

Tests to indicate open-gap insulation coordination, under dry conditions only, shall be made with the switch mounted in accordance with 4.4.2, 4.4.3, and 4.4.4.

4.4.8.1 Test procedure

The open-gap withstand is demonstrated by applying the switching impulse withstand voltage of a given polarity on one terminal of the switch while at the same time applying a bias voltage of 60 Hz waveform on the opposite terminal of the switch (see column 4 of table of ANSI C37.32/D6/2-95 for test voltages). The two voltages shall be timed so that the polarity of one voltage crest is opposite from the polarity of the voltage crest on the other terminal of the switch.

4.4.8.2 Criteria for acceptance

The switch shall be considered to have passed the test if during the simultaneous application of the power-frequency withstand voltage and each of three applications of the rated switching impulse withstand voltage, no flashovers occur across the open gap. If only one flashover across the open gap occurs during the three impulses, nine additional consecutive impulses shall be applied. If a disruptive discharge does not occur on any of these nine additional impulses, the switch shall be considered to have passed the test. A flashover to ground during the 3×9 series shall be

Copyright © 1995 IEEE All Rights Reserved

Copyright The Institute of Electrical and Electronics Engineers, Inc.
Provided by IHS under license with IEEE
No reproduction or networking permitted without license from IHS Not for Resale

considered as a non-event and another impulse shall be applied. No more than one flashover to ground shall be permitted during each series of 3×9 tests.

5. Radio-influence and corona tests

5.1 Simultaneous tests

Radio-influence and corona tests can be conducted separately or at the same time. The following requirements in 5.1.1 through 5.1.4 apply to both types of tests.

5.1.1 Frequency and wave shape of test voltage

The frequency of the test voltage shall be the rated frequency of the device tested. A sine wave of acceptable shape shall be applied.

5.1.2 Atmospheric conditions

It is recommended that tests be avoided when the vapor pressure is below 5 mm (0.2 in) or above 15 mm (0.6 in) of mercury. Since the effects of humidity and air density upon radio-influence and corona voltages are not definitely known, no correction factors are recommended at the present time. However, it is recommended that barometric pressure and dry and wet bulb thermometer readings be recorded so that if suitable correction factors should be determined, they can be applied to previous measurements.

5.1.3 Conductors for use in tests

Conductors of the largest size intended for use with the test piece shall be connected to each terminal. The length of the conductors shall be equal to or greater than the longest overall dimension of the test piece, except that the length need not exceed 1.94 m (6 ft). The free end of any such conductor shall terminate in a sphere having a diameter two times the diameter of the conductor ± 10%, or shall be shielded in some other suitable manner to eliminate the effect of the end of the conductor as a source of radio-influence or corona voltage.

5.1.4 Condition of switch

The temperature of the switch shall be approximately the same as that of the room in which the test is made. The switch shall be dry and clean.

5.2 Radio-influence tests

Radio-influence tests are tests that consist of the application of voltage and the measurement of the corresponding radio-influence units produced by the device being tested.

5.2.1 Test equipment

The meter used in making radio influence measurements shall be in accordance with ANSI C63.2-1987. (See NEMA 107-1987 for a test method and a test circuit that can be used to measure radio influence voltages on high-voltage equipment).

Copyright © 1995 IEEE All Rights Reserved

Copyright The Institute of Electrical and Electronics Engineers, Inc.
Provided by IHS under license with IEEE
No reproduction or networking permitted without license from IHS Not for Resale

5.2.2 Methods for conducting tests

5.2.2.1 Outdoor group-operated switches and single-pole switches

A single-pole switch shall be tested. Tests shall be made with the switch closed and on each terminal with the switch open. The base and unenergized terminals shall be grounded.

5.2.2.2 Multi-pole housed apparatus

Each terminal shall be tested with the housing grounded and the pole or group of poles not connected to the radio-influence measuring apparatus grounded for one test and ungrounded for another.

5.2.3 Proximity of other objects

No grounded or ungrounded object or structure, except mounting structure when required, shall be nearer any part of the apparatus or its terminals undergoing test than three times the longest overall dimension of the test piece, with a minimum allowable spacing of 914 mm (3 ft).

Where space requirements under test conditions do not permit the above clearance to be maintained, the test will be considered satisfactory if the limits of radio-influence voltage obtained are equal to or less than those specified for the apparatus. In such cases, it is desirable that a record be made of the object, structures, etc., and their distance from the device under test. The data may be useful in determining the proximity effect.

5.2.4 Ambient radio noise

Tests may be made under the conditions prevailing at the time and place of test. However, it is recommended that tests be avoided when the radio-influence voltage of the test equipment, including the influence voltage of irrelevant electrical devices and the apparatus under test disconnected from the test equipment, exceeds 25% of the radio-influence voltage of the apparatus to be tested.

5.2.5 Test on assembled equipment

In the case of assembled equipment, the test shall be made without removing any component part, and the test voltage shall be based on the lowest rated voltage of any component part. The limiting radio-influence voltage shall be identical with the highest value specified for any of the component parts that determine the test voltage.

5.2.6 Precautions

The switch shall not be subjected to dielectric tests for 2 h prior to the radio-influence voltage test.

In some cases, it may be found that the radio-influence voltage falls off rapidly after the rated frequency voltage has been applied for a short time. In such cases, before proceeding with the tests, it is permissible to pre-excite the test piece at normal operating voltage for a period of not more than 5 min.

5.3 Corona tests

Corona tests shall consist of the detection of visible corona by

a) The application of voltage
b) The detection of corona plumes and spikes produced at the external surface extremities of the device being tested

Copyright © 1995 IEEE All Rights Reserved

Copyright The Institute of Electrical and Electronics Engineers, Inc.
Provided by IHS under license with IEEE
No reproduction or networking permitted without license from IHS Not for Resale

5.3.1 Switches requiring corona tests

Non-enclosed outdoor switches applied at 121 kV and above shall be subjected to corona tests. When an air switch is a component part of an assembly to be tested, the test voltage shall be based on the lowest rated maximum voltage of any component part.

5.3.2 Test equipment

The equipment shall consist of a test transformer sufficiently void of corona so that it will not interfere with proper observance of the tested device. The tests shall be performed in a dark area, wherein corona plumes and spikes are visible to the unaided eyes after they become accustomed to the general light level in the test area.

5.3.3 Method for conducting tests

Outdoor single-pole switches or a single pole of an outdoor three-phase switch shall be tested in the following manner:

a) With the switch in the closed position and the base grounded, the live parts should be energized by a connection to either terminal.
b) With the switch in the open position and the base and one terminal grounded, the other terminal should be energized. The test should be repeated with the energized and grounded terminals reversed.

The height of energized live parts shall be no higher above the ground plane than the values listed in table 1. These values are based upon the minimum vertical clearances for ungrounded parts as per the National Electrical Safety Code (NESC) (Accredited Standards Committee C2-1993).

Table 1— Recommended ground clearances

BIL (kV)	Clearance between energized live parts and ground recommended for corona testing	
	mm	ft –in
350	2997	9–10
450	3175	10–5
550	3531	11–7
650	3708	12– 2
750	3912	12–10
900	4521	14–10
1050	4724	15–6
1300	5232	17–2
1550	5740	18–10
1800	6248	20– 6
2050	6833	22–5

5.3.4 Proximity of other objects

No grounded or ungrounded objects or structures, except mounting structure when required, shall be nearer any part of the switch than 1.5 times its length of break distance, with a minimum spacing of 914 mm (3 ft). When space requirements do not permit the above clearance to be maintained, the test will be considered satisfactory if the limits

Copyright © 1995 IEEE All Rights Reserved

Copyright The Institute of Electrical and Electronics Engineers, Inc.
Provided by IHS under license with IEEE
No reproduction or networking permitted without license from IHS Not for Resale

of corona-free voltage are equal to or higher than those specified for the switch. In such cases, it is desirable that a record be made of the objects, structures, etc., and their distances from the switch under test. These data may be useful for future use in determining the proximity effect.

Smaller horizontal clearances to live parts than specified in the NESC shall be considered special.

5.3.5 Rated voltage

In some cases, it may be found that the visible corona disappears after the rated voltage has been applied for a short time. In such cases, before proceeding with the tests, it is permissible to pre-excite the test piece at a higher voltage to eliminate the effects of dust particles, etc.

5.3.6 Test voltage application

The switch under test shall have a test voltage applied that will establish visible corona at several different locations. The test voltage need not exceed the corona-free test voltage in 5.3.7 by more than 10%. The test voltage shall then be lowered gradually and noted as the visible corona plumes and spikes disappear from each location. The test voltage at which visible corona plumes and spikes disappear from the last external surface location is the corona-free test voltage.

Adverse weather conditions and contamination may result in corona extinction at a voltage lower than the corona-free voltage.

5.3.7 Corona-free voltage requirement

The visible corona-free test voltage shall not be lower than 1.10 times the line-to-neutral equivalent of the rated maximum voltage. The rated maximum voltages are given in table 1 of ANSI C37.32/D6/2-95.

5.3.8 Criteria for acceptance

The air switch shall be free of visible plumes or spikes at the voltage specified in 5.3.7. If it is questionable whether a switch part is corona-free at a specific test voltage, a suitable photographic method may be used to judge the test results.

6. Temperature rise test

6.1 General

The test shall be made with rated current applied to the switch at rated frequency to determine its temperature rise.

6.2 Mounting

The switch shall be mounted in a closed room substantially free from drafts.

6.3 Switch connections

The switch shall have a conductor at least 1219 mm (4 ft) long connected to each terminal. The conductors shall have a minimum temperature rise approximately equal to the limit of observable temperature rise at rated current (see table 3 of IEEE Std C37.30-1992) of the current-carrying terminal parts of the switch under test. Table 2 gives typical sizes of conductors which can be used for testing.

Copyright © 1995 IEEE All Rights Reserved

Copyright The Institute of Electrical and Electronics Engineers, Inc.
Provided by IHS under license with IEEE
No reproduction or networking permitted without license from IHS Not for Resale

Table 2— Sizes of conductors†

Rise °C ∅ r*	Continuous current rating A	Copper conductor (98% IACS)		Aluminum conductor	
		Size, mm	Size, inches	Size, mm	Size, inches
33	400	400 kcmil cable	400 kcmil cable	**53% Conductivity**	
				Pipe 26.7 OD, 20.93 ID	3/4 Schedule 40
33	600	600 kcmil cable	600 kcmil cable	Pipe 42.2 OD, 35.10 ID	1-1/4 Schedule 40
33	1200	Pipe, 48.3 OD, 38.0 ID	EHPS	Pipe 60.3 OD, 49.25 ID	2 Schedule 80
33	1600	Pipe 60.3 OD, 49.1 ID	EHPS	Pipe 73.0 OD, 59.00 ID	2-1/2 Schedule 80
33	2000	Pipe 73.0 OD, 58.8 ID	2-1/2 EHPS	Pipe 101.6 OD, 90.12 ID	3-1/2 Schedule 40
33	3000	Pipe 101.6 OD, 85.3 ID	3-1/2 EHPS	Pipe 141.3 OD, 128.19 ID	5 Schedule 40
33	4000	Pipe 141.3 OD, 128.6 ID	5 EHPS	**57% Conductivity**	
				Tube 152.4 OD, 127.00 ID	Tube 6 OD, 1/2 wall
33	5000	Pipe 168.3 OD, 146.1 ID	6 EHPS	Tube 203.2 OD, 184.15 ID	Tube 8 OD, 3/8 wall
33	6000	Pipe 219.1 OD, 203.2 ID	8 SPS	Tube 254.0 OD, 234.95 ID	Tube 10 OD, 3/8 wall
				53% Conductivity	
43	400	300 kcmil cable	300 kcmil cable	Pipe 26.7 OD, 20.93 ID	3/4 Schedule 40
43	600	500 kcmil cable	500 kcmil cable	Pipe 33.4 OD, 26.64 ID	1 Schedule 40
43	1200	Pipe 48.3 OD, 40.6 ID	1-1/2 SPS	Pipe 60.3 OD, 52.50 ID	2 Schedule 40
43	1600	Pipe 60.3 OD, 52.4 ID	2 SPS	Pipe 73.0 OD, 62.71 ID	2-1/2 Schedule 40
43	2000	Pipe 73.0 OD, 63.5 ID	2-1/2 SPS	Pipe 88.9 OD, 77.93 ID	3 Schedule 40
43	3000	Pipe 88.9 OD, 73.5 ID	3 EHPS	Pipe 114.3 OD, 102.20 ID	4 Schedule 40
43	4000	Pipe 114.3 OD, 97.0 ID	4 EHPS	**57% Conductivity**	
				Tube 152.4 OD, 136.53 ID	Tube 6 OD, 5/16 wall
43	5000	Pipe 168.3 OD, 155.6 ID	6 SPS	Tube 203.2 OD, 187.33 ID	Tube 8 OD, 5/16 wall
43	6000	Pipe 219.1 OD, 203.2 ID	8 SPS	Tube 203.2 OD, 177.80 ID	Tube 8 OD, 1/2 wall

NOTE — SPS is standard pipe size. EHPS is extra heavy pipe size.
Table notes are continued on page 16.

*Temperature rises are based on an exponent of 2 and calculated using the following formula:
†Ambient temperature range of 10 °C to 40 °C is assumed.

$$\varnothing_r = \frac{\varnothing_{max} - \varnothing_n}{1.5}$$

where

$\varnothing_{max}$ is the allowable maximum temperature.

$\varnothing_r$ is the limit of observable temperature rise at rated continuous current.

$\varnothing_n$ is 25° C.

1.5 is 1.22^2, with 1.22 being the loadability factor.

Copyright © 1995 IEEE All Rights Reserved

Copyright The Institute of Electrical and Electronics Engineers, Inc.
Provided by IHS under license with IEEE
No reproduction or networking permitted without license from IHS Not for Resale

6.4 Method of temperature determination

The temperature may be determined by thermocouples, resistance thermometers, or mercury or alcohol thermometers. Liquid-in-glass thermometers are not suitable for the accurate measurement of surface temperatures.

Refer to IEEE Std 119-1974 for general principles of temperature measurement.

6.5 Ambient temperature during test

The test shall be made at an ambient temperature between 10° C and 40° C. It shall be assumed that the temperature rise is the same for all ambient temperatures between the limits.

6.6 Measurement of ambient temperature

6.6.1 Location of measuring devices

The ambient temperature shall be determined from the readings of three or more temperature measuring devices each placed 305 mm (12 in) from one side of the apparatus, and at the following heights with respect to current-carrying parts:

— One reading 305 mm (12 in) above
— One reading 305 mm (12 in) below
— One reading midway between the above two locations

When switch current-carrying parts are tested in a horizontal position, the average of at least three readings shall be the ambient temperature for all switch parts.

When the current-carrying parts of the switch under test extend vertically, the ambient temperature for each switch part temperature point shall be determined from the temperature measuring device nearest that point.

6.6.2 Temperature stabilization

In order to avoid errors due to the time lag between the temperature of large apparatus and the variations in the ambient temperature, all reasonable precautions must be taken to reduce these variations. When the ambient air is subject to variations, the temperature measuring devices shall be reliably attached to the outside of a suitable mass of metal or immersed in a liquid such as oil in a suitable container.

A convenient form for such a container consists of a metal cylinder with a hole drilled partly through it. This hole is filled with oil and the temperature measuring device is placed therein. The size of the container should be at least 25.4 mm (1 in) in diameter and 50.8 mm (2 in) high. Thermocouples may be attached as described below to an equivalent mass size without the liquid.

6.6.3 Measurement of equipment temperature

Thermocouples shall be used for measuring the temperature of current-carrying parts of the switch and shall be applied to the hottest accessible part. They shall be held in intimate contact with the current-carrying surfaces by such methods as welding, drilling and peening, or cementing.

Copyright © 1995 IEEE All Rights Reserved

Copyright The Institute of Electrical and Electronics Engineers, Inc.
Provided by IHS under license with IEEE
No reproduction or networking permitted without license from IHS Not for Resale

6.7 Duration of temperature rise test

The rated continuous current of the switch at rated frequency shall be applied for such a period of time that the temperature rise of any monitored point on the switch has not changed by more than ± 1° C as indicated by three successive readings at 30 min intervals.

6.8 Criteria for acceptance

The switch assembly shall be considered to have passed this test if the limits of observable temperature rise do not exceed those specified in table 3 of IEEE Std C37.30-1992.

7. Switch performance tests

The switch performance test is a design test in which 180% of rated current at rated frequency is applied to equipment to determine the performance of its current-carrying structure. The switch performance test does not establish an overload rating.

The 180% value of current specified is based upon the following considerations:

a) Heretofore, copper-bronze switches have been predominant in the industry. Cumulative overloading of hard drawn copper conductors causes cumulative annealing. Good industry practice has limited such cumulative overloading during emergencies to a total of 10% loss of tensile strength over the service life of the switch.
b) Commercial hard drawn copper conductors are able to operate at 150 °C maximum temperature for 5 h with only a 10% loss of tensile strength.
c) With 30 °C as an average ambient temperature encountered in practice, the temperature rise of switch parts would be 150 °C–30 °C = 120 °C.
d) Based on the square law, the 120 °C rise translates to a 37 °C rise based on the 180% value, 37 °C × $(1.8)^2$ = 120 °C. (See 5b of table 3 in IEEE Std C37.30-1992 for temperature rise of hard drawn copper parts.)

7.1 Conditions of test

Switch performance tests shall be conducted with the switch mounted in the same manner as for temperature rise tests (see clause 6). The connections and temperature determination shall be made in accordance with 6.3 through 6.6.

7.2 Ambient temperature during test

The test should be made at an ambient temperature in the range of 25 °C to 30 °C. If the ambient temperature is lower than 25 °C, the current value shall be adjusted to provide the same final total temperature that would prevail with a 30 °C ambient using the following formula:

$$\frac{\varnothing - \varnothing_A}{\varnothing - 30} = \left[\frac{I_2}{I_1}\right]^2$$

If $\varnothing$ = 150 °C [see items c) and d) in clause 7],

$\varnothing A$ = 10 °C and I_1 = 600 A,

then I_2 = 648 A

Copyright © 1995 IEEE All Rights Reserved

Copyright The Institute of Electrical and Electronics Engineers, Inc.
Provided by IHS under license with IEEE
No reproduction or networking permitted without license from IHS Not for Resale

7.3 Duration of switch performance test

A current of 180% of rated current (or as modified in 7.2) shall be applied to the switch for a period of 8 h or longer, as may be required. During the last 4 h of current flow, all temperature rise measurements shall be stable. This condition is met if the temperature rise does not increase more than 3% during this 4 h period.

Inasmuch as the thermal time constant of the switch may be of future interest, it is recommended that temperature measurements be recorded during the initial portion of the test and retained for future reference.

7.4 Criteria for acceptance

A switch shall be considered as having passed the switch performance test if it is suitable for mechanical operation at maximum operating speed without sustaining cumulative mechanical damage. If there is evidence of mechanical damage, reduction of contact pressure, or annealing of parts, the switch may be required to pass the peak and short-time withstand current tests as defined in clause 8.

8. Tests for peak withstand and short-time (symmetrical) withstand current ratings

The tests for peak withstand and short-time (symmetrical) withstand current ratings determine the maximum current, including the direct-current component, that equipment shall carry without damage for specified intervals. These ratings recognize the limitations imposed on the switch, including the contact structure, by both thermal and electromagnetic effects. The tests can be performed at any convenient voltage.

8.1 Equipment

The tests for peak withstand and short-time (symmetrical) withstand current ratings shall be performed on a three-pole switch or on a single-pole unit.

8.2 Mounting

The switch shall be mounted on a rigid supporting structure in any convenient mounting position.

8.3 Switch connections

The conductors connecting the switch to the test circuit shall leave each switch terminal in substantially a straight line parallel to the switch blade for an unsupported distance of at least the open gap distance of the switch. For the peak withstand current test, a three-phase test may be performed on three-pole switches rated 48.3 kV and below; however, the peak withstand current shall be measured in an outside phase to assure that the maximum force is produced between adjacent phases. If a single-pole test is performed on a three-phase switch, the return conductor shall be the adjacent phase of the three-pole switch. If the test is performed on a single pole unit, the return conductor shall be mounted parallel to the switch blade and at the same elevation above a plane through the switch base. The spacing from the centerline of this conductor to the centerline of the switch blade shall be equal to the minimum recommended phase spacing for the switch.

Other configurations of conductors may be used that result in an equivalent force on the switch.

Copyright © 1995 IEEE All Rights Reserved

--`,,`-`-`,,`,,`,`,,`---

Copyright The Institute of Electrical and Electronics Engineers, Inc.
Provided by IHS under license with IEEE
No reproduction or networking permitted without license from IHS Not for Resale

8.4 Test durations

8.4.1 Rated peak withstand current test

The minimum duration of the test to verify the peak withstand current rating shall be 10 cycles (formerly rated momentary current, see 3.5.1 of IEEE Std C37.30.2-1992).

8.4.2 Rated short-time (symmetrical) withstand current test

The minimum duration of the test to verify the short-time (symmetrical) withstand current rating shall be 3 s (formerly the rated 3-s current). However, the current and its duration may be adjusted to give the same integrated heating equivalent (see 3.5.2 of IEEE Std C37.30.2-1992), but the maximum test period shall not exceed 6 s.

8.5 Measurement of current

The current shall be determined in accordance with 7.1.6 of IEEE Std C37.09-1979.

8.6 Condition of switch after test

The peak withstand and the short-time (symmetrical) withstand current ratings shall be considered met if there is no visible damage to the switch after the test, and in the case of an interrupter switch, to the interrupting element. The switch must withstand repeated mechanical operations (at least 15 open-close cycles) without cumulative damage. However, the tests may result in some visual evidence of the switch having passed current, such as slight contact markings. When this occurs, it shall be demonstrated that the switch can carry its rated continuous current without exceeding the allowable temperature rise and, in the case of an interrupter switch, is capable of meeting its interrupting rating.

9. Interrupting tests

Interrupting tests are made to determine or verify the ratings of interrupter switches.

9.1 Load current interrupting tests

Load current interrupting tests shall be performed in accordance with the following:

a) Tests shall be made with a power-frequency recovery voltage equal to the rated maximum voltage of the switch. Tests on either single-pole or multi-pole assemblies of group-operated switches are acceptable. A single pole of a three-pole group-operated switch may be tested with a power-frequency recovery voltage equal to 87% of rated maximum voltage provided it can be demonstrated that third pole opening (when group-operated) following the second pole opening, is within a time interval that permits the third pole to divide the recovery voltage with the second pole. It must also be demonstrable that the operating life expectancy determined on the basis of single-pole testing will not be adversely affected by group operation.
b) Tests shall be made on a CO (close-open) duty cycle. The switch shall be allowed to cool between tests, where required for proper performance.
c) The power factor of the load circuit that is interrupted by the switch under test shall not be higher than 80% lagging. The load circuit shall be composed of resistance and reactance, connected in parallel or the equivalent.
d) The current interrupted and the recovery voltage shall be determined in accordance with IEEE Std C37.09-1979.

 Copyright © 1995 IEEE All Rights Reserved

Copyright The Institute of Electrical and Electronics Engineers, Inc.
Provided by IHS under license with IEEE
No reproduction or networking permitted without license from IHS Not for Resale

9.2 Excitation current interrupting tests

For the purpose of testing the transformer excitation current interrupting ability of an interrupter switch, tests shall be conducted in accordance with 8.1, except that the load circuit shall consist of an actual or simulated transformer.

9.3 Capacitive current switching tests

Capacitive current switching tests shall be conducted in accordance with the following to determine the shunt capacitance switching ratings of an interrupter switch:

a) For three-pole or single-pole switches, group-operated. Tests shall be made on a single pole of the interrupter switch in a single-phase test circuit as shown in figure 1 [see items d) and e)].
   The test circuit voltage shall be such that the voltage across the capacitance with the switch closed shall be 1.2 times rated maximum voltage of the switch (see IEEE Std C37.09-1979-4.13.4.2) except
   1) For those switches designated to switch only a grounded capacitor bank supplied by an effectively grounded source, the test voltage may be 0.58 times rated maximum voltage [see item 4)].
   2) For those switches in which the mechanical parting of the three-phase contacts occurs within 0.5 cycle, the single-phase test voltage may be 0.87 times rated maximum voltage [see item 4)].
   3) As an alternate to single-phase testing, three-phase capacitive current switching tests may be conducted for those switches in which the mechanical parting of the three-phase contacts occurs within 0.5 cycle provided that the differential capacitance switching voltage shall be the rated minimum, and the test voltage shall be equal to the rated maximum voltage.
   4) Inductances between parallel capacitances should be adjusted so that the inrush current is equal in magnitude to that obtained in single-phase testing at 1.2 times rated maximum voltage (see 4.13.4.2 in IEEE Std C37.09-1979).
b) For single-pole switches not group-operated; tests shall be made at rated maximum voltage.
c) The differential capacitance voltage for the test circuit shall be no greater than 0.866 times the rated differential capacitance voltage (minimum), except as in 9.3.1 c) and 9.3.2 c) with the capacitance discharged before closing.
d) Switching tests shall be made on a CO (close-open) duty cycle. A time interval of any duration between closing and opening is permissible. Initiation of the operation shall be on a random basis.
e) The damping of the inrush current to the capacitance being switched shall be such that the ratio of one natural-frequency current peak to the preceding peak of the same polarity shall be no less than 0.70 without arc voltage and without such damping resistors as are part of the switch.
f) The capacitance switching transient overvoltage-voltage ratio shall be determined from measurements made across both the source side and load side terminals of the test circuit to ground during test operation.
g) The current interrupted shall be determined in accordance with IEEE Std C37.09-1979.
h) The frequency of the test circuit shall be the rated frequency of the switch.

Copyright © 1995 IEEE All Rights Reserved

--`,,`-`-`,,`,,`,`,,`---

Copyright The Institute of Electrical and Electronics Engineers, Inc.
Provided by IHS under license with IEEE
No reproduction or networking permitted without license from IHS Not for Resale

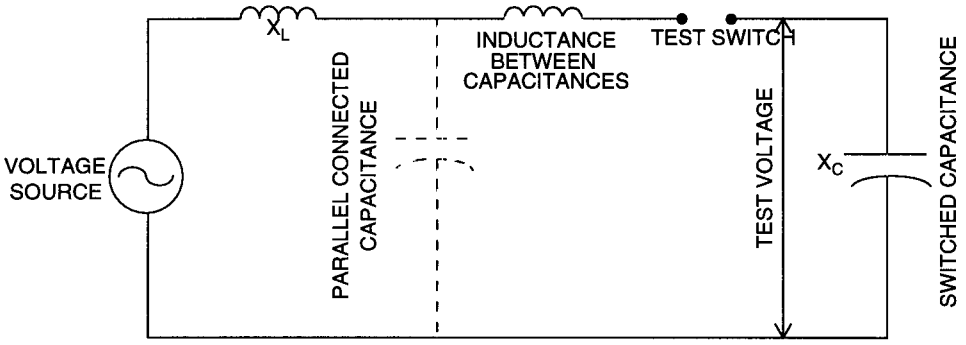

NOTE — Dotted lines are for parallel capacitance tests.

Figure 1— Test circuit

9.3.1 Capacitive current switching tests—single capacitance

Each type and rating of switch having a “rated switching current-single capacitance” shall be tested according to the following schedule:

Without additional capacitance in parallel:

a) At its rated switching current for single capacitance, a number of duty cycles equal to 100% of its operating life expectancy. If it can be demonstrated in the test circuit in figure 1 that a switch is restrike-free when subjected to 36 duty cycles (three at each angle), where the opening operation has been controlled to obtain interrupter contact separation at intervals of 30 electrical degrees on the voltage wave from 0 to 360 degrees ± 5 degrees, then the voltage for the remainder of this test may be reduced to 75% of that specified in item a) of 9.3, 90% of that specified in item a) 1) of 9.3; or three-phase tests may be substituted at 90% of rated maximum voltage provided that following completion of the test, it can be demonstrated that the tested switch also is restrike-free under the same conditions as the switch as described above.

b) In addition, the following tests shall be made:
   1) At 75% of its rated switching current for single capacitance, a number of duty cycles equal to 25% of its operating life expectancy, or 50 operations, whichever is less. The number of operations may be reduced to 24 (two at each angle) provided the opening operations are controlled to obtain interrupter contact separation at intervals of 30 electrical degrees on the voltage wave from 0 to 360 degrees ± 5 degrees.
   2) At 50% of its rated switching current for single capacitance, a number of duty cycles equal to 25% of its operating life expectancy, or 50 operations, whichever is less. The number of operations may be reduced to 24 (two at each angle) provided the opening operations are controlled to obtain interrupter contact separation at intervals of 30 electrical degrees on the voltage wave from 0 to 360 degrees ± 5 degrees.

c) Additional tests shall be made at 100% of its rated switching current for single capacitance in the test circuit with the differential capacitance voltage at selected values from 0.866 times the minimum to 1.73 times the maximum to demonstrate conformance to rated switching current requirements.

d) Random contact timing may be substituted for controlled timing if a sufficient number of duty cycles are performed so that the required number are properly distributed within the specified timing intervals.

A new switch may be used in each of parts a) and b).

9.3.2 Capacitive current switching tests-parallel capacitance

Each type and rating of switch having a “rated switching current-parallel capacitance” shall be tested according to the following schedule:

Copyright © 1995 IEEE All Rights Reserved

Copyright The Institute of Electrical and Electronics Engineers, Inc.
Provided by IHS under license with IEEE
No reproduction or networking permitted without license from IHS
Not for Resale

With parallel-connected capacitance equal in value to the switched capacitance, and with the value of inductance between parallel-connected and switched capacitance (including the inductance of the capacitances) not greater than:

— 19 μH (microhenries) in test circuits 18.6 kV or less (15.5 kV rated maximum)
— 26 μH in test circuits above 18.6 kV but not above 31.0 kV (25.8 kV rated maximum)
— 36 μH in test circuits above 31.0 kV but not above 45.6 kV (38 kV rated maximum)
— 50 μH in test circuits above 45.6 kV but not above 58.0 kV (48.3 kV rated maximum)
— 69 μH in test circuits above 58.0 kV but not above 87.0 kV (72.5 kV rated maximum)
— 108 μH in test circuits above 87.0 kV but not above 145 kV (121 kV rated maximum)

The damping of the inrush current between capacitances shall be such that the ratio of one natural-frequency current peak to the preceding peak of the same polarity shall be no less than 0.70 without arc voltage and without such damping resistors as are part of the switch.

a) At 100% of its rated switching current for parallel-connected capacitance, a number of duty cycles equal to 100% of its operating life expectancy.

   If it can be demonstrated in the test circuit in figure 1 that a switch is restrike-free when subjected to 36 duty cycles wherein the opening operation has been controlled to obtain interrupter contact separation at intervals of 30 electrical degrees on the voltage wave from 0 to 360 degrees ± 5 degrees, then the test voltage for the remainder of this test may be reduced to 75% of that specified in item a) 1) of 9.3, 90% of that specified in item a) 1) of 9.3, or three-phase tests may be substituted at 90% of rated maximum voltage provided that following completion of the test, it can be demonstrated that the tested switch also is restrike-free under the same conditions as the switch as described above.

b) In addition, the following tests shall be made:
   1) At 75% of its rated switching current for parallel-connected capacitance, a number of duty cycles equal to 25% of its operating life expectancy, or 50 operations, whichever is less.
      The number of operations may be reduced to 24 (two at each angle) provided the opening operations are controlled to obtain interrupter contact separation at intervals of 30 electrical degrees on the voltage wave from 0 degrees to 360 degrees ± 5 degrees.
   2) At 50% of its rated switching current for parallel-connected capacitance, a number of duty cycles equal to 25% of its operating life expectancy, or 50 operations, whichever is less.
      The number of operations may be reduced to 24 (two at each angle) provided the opening operations are controlled to obtain interrupted contact separation at intervals of 30 electrical degrees on the voltage wave from 0 to 360 degrees ± 5 degrees.
   3) At 25% of its rated switching current for parallel-connected capacitance, a number of duty cycles equal to 25% of its operating life expectancy, or 50 operations, whichever is less.
      The number of operations may be reduced to 24 (two at each angle) provided the opening operations are controlled to obtain interrupter contact separation at intervals of 30 electrical degrees on the voltage wave from 0 to 360 degrees ± 5 degrees.

c) Additional tests shall be made at 100% of its rated switching current for parallel-connected capacitance in the test circuit with the differential capacitance voltage at selected values from 0.866 times the minimum to 1.73 times the maximum to demonstrate conformance to rated switching current requirements.

d) Random contact timing may be substituted for controlled timing if a sufficient number of duty cycles are performed so that the required number are properly distributed within the specified timing intervals.

A new switch may be used in each of parts a) and b).

9.4 Condition of switch after test

At the end of the number of tests corresponding to the operating life expectancy, an interrupter switch shall have functioned without failure and without maintenance or replacement of parts and it shall be capable of carrying rated continuous current at any voltage up to rated maximum voltage without exceeding rated temperature rise.

Copyright © 1995 IEEE All Rights Reserved

--`,,`-`-`,,`,,`,`,,`---
Copyright The Institute of Electrical and Electronics Engineers, Inc.
Provided by IHS under license with IEEE
No reproduction or networking permitted without license from IHS Not for Resale

10. Ice tests

Ice tests are design tests made to determine the rated ice breaking ability of outdoor switching equipment.

10.1 General

An ice storm can cause major difficulties in the operation of electric power systems. Under certain atmospheric conditions, a deposit of ice can build up to a thickness that can cause overhead lines to fail and can cause difficulty in the operation of outdoor switching equipment.

The purpose of these tests is to demonstrate that the equipment will operate successfully under iced conditions. The test code describes the procedure for producing controlled coatings of ice that compare with those encountered in nature, and defines these procedures so that the tests can be consistently repeated.

10.2 Study of ice formation

Nature produces ice coatings that can be divided into two general categories:

a) *Clear ice* generally results from rain falling through air whose temperature is somewhat below the freezing point of water.
b) *Rime ice* is characterized by a white appearance caused by entrapped air during the ice formation; it usually forms from rain falling through air whose temperature is below –10° C (+14 °F), or forms when atmospheric moisture condenses on cold surfaces.

The test shall be performed with clear ice since it is recognized that clear ice coatings represent the most difficult operating conditions. Since such coatings may form during a period of rain when initial temperatures are above freezing, the switch bearings and moving joints may be filled with water, which may freeze.

10.3 Test methods

Either of the following are acceptable:

a) Controlled environment test (indoor laboratory test)
b) Natural environment test (outdoor test)

The type of laboratory used shall be stated on the test report. Three-pole, group-operated switches shall be tested as complete three-pole assemblies; single-pole operated (EHV) switches may be tested as a complete single-pole assembly.

10.3.1 Switch surface condition

External switch surfaces shall be free from all traces of oil or grease; a thin film of oil or grease will prevent ice from adhering to the switch and will greatly affect the test results.

10.3.2 Test arrangement—general

A switch shall be tested for ice breaking ability during an opening operation and a closing operation.

The switch shall be tested with a minimum of one insulator per stack and representative operating mechanism components such as levers, bell cranks, pin joints, universal joints, bearings, etc., as required for a typical installation in the field.

Copyright © 1995 IEEE All Rights Reserved

Copyright The Institute of Electrical and Electronics Engineers, Inc.
Provided by IHS under license with IEEE
No reproduction or networking permitted without license from IHS Not for Resale

10.3.2.1 Test arrangement—controlled environment

When testing in a controlled environment (indoor laboratory) with space limitations, reductions are permitted for switch mounting height, insulator height, phase spacing, and vertical operating pipe length.

10.3.2.2 Test arrangement—natural environment

When testing in a natural environment (outdoor), reductions are permitted for switch mounting height, phase spacing, and vertical operating pipe length. At the users option, insulator height may be reduced.

10.3.3 Measurement of ice thickness

Metal rods or tubes approximately 25.4 mm (1 in) in diameter and 608.6 mm (2 ft) in length shall be mounted with their longitudinal axes horizontal, at each end of the test specimen, so placed to receive the same general wetting as the switch under test. For switches with main contacts other than at the end, additional metal rods or tubes shall be placed near the contacts. The number of metal rods or tubes shall be sufficient to provide a fair evaluation of the ice build-up on all parts of the equipment, and in no event shall less than one metal rod or tube per pole be used.

The thickness of the ice deposits shall be measured on the top surface of the rods or tubes by measurement of the depth of saw cuts or drilled holes made 152.4 mm (6 in) from each end of the rod or tube. The average of the ice thickness measurements shall be at least equal to the rated ice breakage ability of the switch and no measurement of ice thickness on any individual rod or tube shall be less than 83% of this rating.

10.4 Test conditions

The test may be made in a controlled environment (indoor laboratory) or a natural environment (outdoor laboratory).

10.4.1 Controlled environment (indoor laboratory)

10.4.1.1 Test conditions

As a guide, the switch should be completely assembled as per 10.3.2, in an enclosure that can be refrigerated to a temperature of –6 °C (+21 °F). The refrigerated room shall be equipped with sprinklers to provide a fine water spray to the entire switch area with general wetting from above at various angles up to 45 degrees from the vertical.

As a guide, the water used may be cooled to a temperature between 0 °C (32 °F) and 3 °C (37 °F). It has been observed that 40 to 80 liters/h/m^2 (1 to 2 gal/h/ft2) of the area to be sprayed will be required, to cause ice to be deposited at a rate of approximately 6 mm/h (1/4 in/h).

For EHV switch tests, when the available water spray cannot wet all three phases at the same time, appropriate modifications of the test conditions are permitted. However, the water spray must be capable of covering at least one entire single-pole switch during the wetting and freezing periods.

10.4.1.2 Initial wetting conditions

During the first 1 h wetting period the ambient temperature shall be between +1 °C (33 °F) and +3 °C (37 °F).

10.4.1.3 Conditions for ice buildup

Following the first 1 h wetting period (see 10.4.1.2) the temperature shall be lowered to the range –6 °C (21 °F) to –3 °C (27 °F) and the spray continued until the required ice thickness is measured on the top surfaces of the test rods or tubes, as per 10.3.3.

Copyright © 1995 IEEE All Rights Reserved

Copyright The Institute of Electrical and Electronics Engineers, Inc.
Provided by IHS under license with IEEE
No reproduction or networking permitted without license from IHS Not for Resale

10.4.1.4 Curing of ice coating

The ice coating shall cure with the room temperature in the range of –6 °C (21 °F) to –3 °C (27 °F) for a minimum of 2 h after the spray is discontinued. This ensures that all parts of the switch and ice coatings are at the same temperature. The switch shall be operated following this curing period.

10.4.2 Natural environment (outdoor)

10.4.2.1 Test conditions

The test procedure described below can be used only when the outdoor temperature is between –3 °C (27 °F) and –15 °C (5 °F) and the wind velocity is below 15 mph (25 km/h). The switch, complete with operating mechanism as per 10.3.2, shall be tested in an outdoor atmosphere. The test area shall be equipped with adequate spray equipment with sufficient water pressure to provide even coverage of all the equipment under test.

For EHV switch tests, when the available water spray cannot wet all three phases at the same time, appropriate modifications of the test conditions are permitted. However, the water spray must be capable of covering at least one entire single-pole switch during the wetting and freezing periods.

10.4.2.2 Initial wetting conditions

During the 1 h wetting period with the ambient temperature above freezing, the equipment under test shall be covered with a fine spray deposit. The wetting shall precede the spray for ice build-up by not more than 4 h.

10.4.2.3 Conditions for ice buildup

To obtain uniform coverage, the spray equipment may require adjustment because of wind conditions. If necessary, the spray may be interrupted to permit proper ice formation. As a guide, the required thickness of ice should be obtained in a 6 h period.

10.4.2.4 Curing of ice coating

The ice coating shall cure for a minimum of 2 h prior to the operating test. A drop in temperature during the curing period will not appreciably affect the test results. However, the operating tests must be completed before the temperature rises above –3 °C (27 °F) and before the radiant heat of the sun changes the characteristics of the ice.

10.5 Test procedure

10.5.1 Manually operated switches

Manually operated disconnecting and grounding switches shall be operated by a person using a standard operating mechanism. On opening or closing, chopping (the action of jerking the manual operating mechanism back and forth) is an acceptable means of loosening the ice.

10.5.2 Power operated switches

Switches tested with a power operator shall perform successfully on the first power-operated opening attempt. On closing, multiple attempts prior to successful closing are permitted. The multiple attempts may be obtained by modifying the closing sequence electrically or by providing an alternative mechanical or manual means.

Switches may be rated for single-attempt closing; however, they must operate successfully on their first closing attempt with a power operator to be so rated.

Copyright © 1995 IEEE All Rights Reserved

Copyright The Institute of Electrical and Electronics Engineers, Inc.
Provided by IHS under license with IEEE
No reproduction or networking permitted without license from IHS Not for Resale

10.5.3 Load interrupter switches

Load-interrupter switches and interrupter switches with capacitance ratings shall be capable of circuit interruption during successful opening of the switch.

Following the successful closing of an iced switch, the interrupter switch shall be capable of circuit interruption during a subsequent opening operation.

10.5.4 Fault initiating switches

Fault-initiating switches shall perform successfully on the first closing attempt.

Specific operating force or torque requirements shall be considered special.

10.6 Criteria for acceptance

10.6.1 Switch operation

The ice test shall be satisfactorily completed when the switch has been operated from its iced full open position to its full closed position and has been operated from its iced full closed position to its full open position, and no damage has been caused that will interfere with normal manual or power operation. A successful close operation shall require engagement of the make-and-break contact surfaces. The order of close-to-open or open-to-close icing and operation is optional.

During the ice test an interrupter switch shall have sustained no damage that will impair its circuit interruption capability.

10.6.2 Switch condition after test

The contact forces or resistances shall be determined before beginning and after completing the test to verify that no significant change has occurred in the condition of the contacts.

For interrupter switches, physical examination of linkages, components, and alignments shall be made to assure that proper interrupter operation and sequencing has been retained.

10.6.3 Switch integrity test

If there is doubt about the successful performance of the switch evaluated in 10.6.2, then a temperature rise test or a short-time current withstand test shall be made to prove acceptable performance.

11. Mechanical operations test

The mechanical operations test is made to determine the mechanical capability of the switch.

11.1 General

The purpose of this test is to ensure the satisfactory operation of the equipment in normal service without excessive maintenance.

Copyright © 1995 IEEE All Rights Reserved

Copyright The Institute of Electrical and Electronics Engineers, Inc.
Provided by IHS under license with IEEE
No reproduction or networking permitted without license from IHS Not for Resale

11.2 Test arrangement

A complete air switch shall be tested with a full complement of its rated strength insulators and representative operating mechanism components, such as levers, bell cranks, pin joints, universal joints, bearings, etc., as required for a typical installation in the field. Modifications shall be limited to operating pipe lengths.

11.3 Test procedure

The rated number of mechanical operations shall be performed on the air switch. Mechanical loading of the terminals of the test switch shall be in accordance with the switch ratings for 10% of the rated number of mechanical operations.

11.3.1 Switch test conditions

The test shall not require that voltage or current be applied to the main circuits.

11.3.2 Terminal loading conditions

The rated mechanical terminal load (see table of ANSI C37.32/D6/2-95) for each loading condition shall be applied simultaneously to each terminal of one pole. The four separate terminal loading conditions are illustrated in figure 2 and are as follows:

a) In a plane parallel to the plane of the mounting base and in the direction of the mounting base away from the switch for one fourth of the operations with terminal loading [see figure 2a)]
b) In a plane parallel to the plane of the mounting base and in the direction of the mounting base toward the switch for one fourth of the operations with terminal loading [see figure 2b)]
c) In a plane parallel to the plane of the mounting base and 90 degrees to the direction of the mounting base for one fourth of the operations with terminal loading [see figure 2c)]
d) In a plane perpendicular to the plane of the mounting base and toward the mounting base for one fourth of the operations with terminal loading [see figure 2d)]

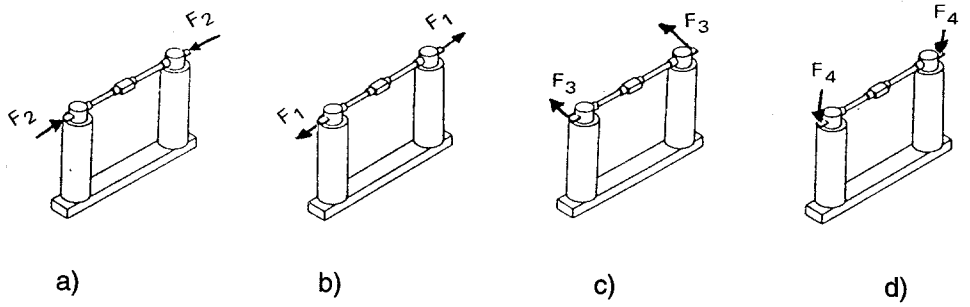

Figure 2— Switch mechanical loading conditions

11.3.3 Switch power operator at various control voltages

Power-operated switches shall be tested for 90% of rated operations at rated control voltage, 5% at minimum control voltage, and 5% at maximum control voltage. Control voltages shall be measured at the closest available terminals to the motor.

11.3.4 Switch maintenance during test

During the test, no component shall be repaired or replaced and no maintenance shall be performed.

Copyright © 1995 IEEE All Rights Reserved

--`,,`-`-`,,`,,`,`,,`---
Copyright The Institute of Electrical and Electronics Engineers, Inc.
Provided by IHS under license with IEEE
No reproduction or networking permitted without license from IHS Not for Resale

11.4 Criteria for acceptance

11.4.1 Switch operation

The mechanical operations test shall be satisfactorily completed if all parts, including contact surfaces, are in good condition and do not show undue wear.

11.4.2 Switch condition after test

The contact forces or electrical resistances shall be determined before beginning and after completing the test to verify that no significant change has occurred in the condition of the contacts.

11.4.3 Switch integrity test

If there is doubt about the successful performance of the switch evaluated in 11.4.2, then a temperature rise test (see clause 6) or a short-time current withstand test (see clause 8.) shall be made to prove acceptable performance.

Copyright © 1995 IEEE All Rights Reserved

--`,,`-`-`,,`,,`,`,,`---

Copyright The Institute of Electrical and Electronics Engineers, Inc.
Provided by IHS under license with IEEE
No reproduction or networking permitted without license from IHS Not for Resale

Annex A Background information

(Informative)

A.1 Use of higher temperature materials

The changes in temperature limitations are intended to allow new materials to be used in switch construction. These limitations allow each piece of material to be used at its maximum efficiency consistent with safe operating practices and acceptable durability, with minimum maintenance programs.

This standard recognizes that air switches can be operated at allowable continuous currents in excess of rated continuous currents when reduced ambient temperatures prevail. Indoor and outdoor air switches built prior to 1971 in accordance with previous standards were allowed a 30 °C temperature rise over a maximum ambient of 40 °C. In this way, they were allowed to operate at a maximum temperature of 70 °C. With a 25 °C ambient, these switches could operate at 1.22 times rated current without exceeding the 70 °C maximum temperature.

Enclosed switches, sometimes referred to as *indoor switches*, were permitted to operate at a 30 °C rise above a cooling air temperature of 55 °C within the enclosure. With a 25 °C outside ambient temperature, these switches could also be loaded to 1.22 times nameplate.

These limits will provide for new economies in switch construction by allowing materials to be used to their full capability and, at the same time, will preserve the current-carrying capability of switches built in accordance with previous standards.

A.2 Switching impulse voltage tests of switch open gap

The switching impulse voltage test procedure for switches rated 362 kV and above requires the use of the up-and-down method for determining the 50% (critical) flashover voltage for the line-to-ground insulation. The withstand voltage calculated from the test 50% (critical) flashover voltage meets or exceeds the values shown in column 3 of table 1 in ANSI C37.32/D6/2-95.

The switching impulse voltage open-gap withstand voltage test procedure requires application of a bias voltage to the open switch gap. The magnitude of the total voltage stress applied to the gap was chosen to be the 50% (critical) flashover voltage + 2D flashover voltage of the line-to-ground insulation (based on the rated withstand voltage and a 6% standard deviation. This voltage stress is applied using the 60 Hz crest value of the phase-to-ground equivalent of the rated maximum voltage of the equipment on one side of the gap with a switching impulse voltage applied on the other side adjusted in magnitude to provide the total gap voltage stress. This particular test value is not based on any defined coordination requirement, but is a value that is achievable with existing switch gaps and at the same time offers sufficient margin to ensure that the switch gap is stronger than the line-to-ground insulation when inaccuracies of the test method are considered.

Using the 3 9 withstand test to verify the gap strength, there are three conditions of interest as follows:

a) The test is passed with a 3/0 occurrence.
b) The test is passed with a 12/1 occurrence.
c) The test is failed with two flashovers.

Case 1: Passing a 3/0 test does not provide sufficient information to establish meaningful confidence limits. If the probability of discharge across the open gap is Gaussian, then the probability of passing the 3/0 test for a given discharge probability can be calculated. For example, if the true probability of flashover of the gap is 2.3% at the test level, then the probability of passing the 3/0 test is 93%. If the true probability of flashover of the gap is 90% at the test level, then the probability of passing the 3/0 test drops to 0.1%.

Copyright © 1995 IEEE All Rights Reserved

--`,,`-`-`,,`,,`,`,,`---

Copyright The Institute of Electrical and Electronics Engineers, Inc.
Provided by IHS under license with IEEE
No reproduction or networking permitted without license from IHS Not for Resale

In order for the switch gap to be weaker than the line-to-ground insulation and also pass the 3/0 test, the probability of discharge of the gap at the specified voltage would have to be 97.7% or higher. With this probability of discharge, the probability of the switch passing the 3/0 test would be 0.001%. This is sufficient to conclude that passing a 3/0 test at the required level reasonably demonstrates a gap strength in excess of the line-to-ground strength.

Case 2: Passing a 12/1 test at the specified voltage results in a 95% confidence that the test value has a probability of discharge across the open gap of between 1% and 40%. This means that even with a large confidence band, there is a high confidence that the switch gap strength exceeds the line-to-ground strength. The probability of passing the 12/1 test for discharge probabilities of 0.01, 0.023, and 0.1 are 0.99, 0.97, and, 0.66 respectively.

Case 3: The probability of failing the 12/1 test with two discharges for a 2.3% probability of discharge is 3%. This represents a risk to the manufacturer that a gap which is in reality considerably stronger than the line-to-ground insulation could fail this test. However, this is unlikely because the bias test levels are conservatively set at the single voltage capability of the switch gap (see column 7 of table 1 of ANSI C37.32/D6/2-95). It is generally recognized that the bias test is a less severe test than a single impulse voltage test of the same magnitude. The bias test method at the specified levels indicates discharge probabilities of 1% or less for the gaps listed in column 6 of table 1 of ANSI C37.32/D6/2-95. This level of discharge probability results in a probability of failing the 12/1 test of 1% or less.

The up-and-down method was not recommended for the switching impulse voltage open-gap withstand voltage test because laboratories expressed reservations about subjecting their 60 Hz transformers to the repeated surges that would be inherent in the use of the up-and-down method in conjunction with the bias test. Even though protective circuits can be designed, the risk associated with repeated impulses is of concern. Laboratories are more comfortable with the 2/15 or the 3/9 withstand verification methods because they limit the number of potential flashovers. These concerns were considered during the development of this consensus document.

Copyright © 1995 IEEE All Rights Reserved

Copyright The Institute of Electrical and Electronics Engineers, Inc.
Provided by IHS under license with IEEE
No reproduction or networking permitted without license from IHS Not for Resale

Annex B Bibliography

(Informative)

[B1] Atwood, A. W., Hileman, A. R., Jr., Wittibschlager, F., and Skooglund, J. W., “Switching Surge Tests on Simulated and Full Scale EHV Insulation Systems,” *IEEE Transactions on Power Apparatus and Systems*, vol. 84, pp. 293–303, April 1965.

[B2] IEC 60, High voltage-test techniques (all parts).

[B3] IEC 129 (1984), Alternating current disconnectors (isolators) and earthing switches.

[B4] Owens, J. B., “The Determination of Switching Surge Withstand Voltages for Insulation Systems,” *IEEE Transactions on Power Apparatus and Systems*, vol. 83, pp. 263-266, March 1964.

[B5] Smithsonian Meteorological Tables. 6th ed. Washington, D. C.: Smithsonian Institution, 1951.

Copyright © 1995 IEEE All Rights Reserved

Copyright The Institute of Electrical and Electronics Engineers, Inc.
Provided by IHS under license with IEEE
No reproduction or networking permitted without license from IHS
Not for Resale