ANSI C37.32-2002
(Revision of ANSI C37.32-1996)

American National Standard for High Voltage Switches, Bus Supports, and Accessories Schedules of Preferred Ratings, Construction Guidelines, and Specifications

Approved 20 March 2002

American National Standards Institute, Inc.

The Institute of Electrical and Electronics Engineers, Inc.
3 Park Avenue, New York, NY 10016-5997, USA

Copyright © 2003 by the Institute of Electrical and Electronics Engineers, Inc.
All rights reserved. Printed in the United States of America.

Print: ISBN 0-7381-3604-2 SH95098
PDF: ISBN 0-7381-3605-0 SS95098

No part of this publication may be reproduced in any form, in an electronic retrieval system or otherwise, without the prior written permission of the publisher.

--`,-`-`,,`,,`,`,,`---

Copyright The Institute of Electrical and Electronics Engineers, Inc.
Provided by IHS under license with IEEE
No reproduction or networking permitted without license from IHS

Not for Resale

AMERICAN NATIONAL STANDARD

Approval of an American National Standard requires verification by ANSI that the requirements for due process, consensus, and other criteria for approval have been met by the standards developer.

Consensus is established when, in the judgment of the ANSI Board of Standards Review, substantial agreement has been reached by directly and materially affected interests. Substantial agreement means much more than a simple majority, but not necessarily unanimity. Consensus requires that all views and objections be considered, and that a concerted effort be made toward their resolution.

The use of American National Standards is completely voluntary; their existence does not in any respect preclude anyone, whether he has approved the standards or not, from manufacturing, marketing, purchasing, or using products, processes, or procedures not conforming to the standards.

The American National Standards Institute does not develop standards and will in no circumstances give an interpretation of any American National Standard. Moreover, no person shall have the right or authority to issue an interpretation of an American National Standard in the name of the American National Standards Institute. Requests for interpretations should be addressed to the secretariat or sponsor whose name appears on the title page of this standard.

Caution Notice: This American National Standard may be revised or withdrawn at any time. The procedures of the American National Standards Institute require that action be taken periodically to reaffirm, revise, or withdraw this standard. Purchasers of American National Standards may receive current information on all standards by calling or writing the American National Standards Institute.

Copyright The Institute of Electrical and Electronics Engineers, Inc.
Provided by IHS under license with IEEE
No reproduction or networking permitted without license from IHS
Not for Resale

This page intentionally left blank.

Copyright The Institute of Electrical and Electronics Engineers, Inc.
Provided by IHS under license with IEEE
No reproduction or networking permitted without license from IHS
Not for Resale

Contents

Page

Foreword vi

1 Introduction 1
- **1.1** Scope 1
- **1.2** References 1

2 Definitions 2

3 Station class outdoor air disconnect switches 2
- **3.1** Basis of preferred ratings 2
- **3.2** Preferred ratings 2
- **3.3** Dielectric test voltages 3
- **3.4** Construction specifications 3

4 Distribution class outdoor air disconnect switches. 4
- **4.1** Basis of preferred ratings 4
- **4.2** Preferred ratings 4
- **4.3** Dielectric test voltages 5
- **4.4** Construction specifications 5

5 Indoor air switches 5
- **5.1** Basis of preferred ratings 5
- **5.2** Preferred ratings 6
- **5.3** Dielectric test voltages 6
- **5.4** Construction specifications 6

6 Grounding air switches 7
- **6.1** Basis of preferred ratings 7
- **6.2** Preferred ratings 7
- **6.3** Electrical clearances 7
- **6.4** Corona and radio influence test voltage limits 7
- **6.5** Construction specifications 7

7 Fault initiating switches 8
- **7.1** Basis of preferred ratings 8
- **7.2** Preferred ratings 8

Copyright The Institute of Electrical and Electronics Engineers, Inc.
Provided by IHS under license with IEEE
No reproduction or networking permitted without license from IHS
Not for Resale

7.3 Preferred closing time 8
7.4 Operating life expectancies 8
7.5 Corona and radio influence test voltage limits 8
7.6 Construction specifications 8

8 Outdoor, indoor, and enclosed interrupter switches 8
8.1 Basis of preferred ratings 8
8.2 Preferred rated power frequency 8
8.3 Preferred rated voltages 8
8.4 Preferred rated dielectric withstand 9
8.5 Preferred rated currents 10
8.6 Preferred rated switching endurance 10
8.7 Preferred rated ice breaking ability 10
8.8 Preferred rated control voltage 10
8.9 Preferred rated mechanical operations 11
8.10 Preferred rated terminal loading 11
8.11 Construction specifications 11
9 Bus supports 11
9.1 Insulators 11
9.2 Fittings 11
9.3 Phase spacing 11

10 Switch accessories, operating mechanisms, and switch hooks 11
10.1 Rated control voltages for power-operated mechanisms 11
10.2 Hook stick lengths and hook dimensions 12

Annexes

A Reference data 29
B Historical data 31
C Bibliography 32

Figures

1 Arrangement of bolt holes in terminal pads 27
2 Outdoor air switch hook dimensions 28
B1 Typical construction classification of station class outdoor air disconnect switches 31

--`,,`-`-`,,`,,`,`,,`---

Copyright The Institute of Electrical and Electronics Engineers, Inc.
Provided by IHS under license with IEEE
No reproduction or networking permitted without license from IHS

Not for Resale

Tables

1 Preferred voltage ratings for station class outdoor air switches 13
2 Preferred switching impulse withstand voltage for station class outdoor air switches 14
3 Preferred continuous and withstand currents for station class outdoor air switches 14
4 Terminal loadings for high-voltage switches 15
5 Phase spacing and ground clearance for station class outdoor air switches and bus supports 16
6 Station class outdoor air switch-pole unit dimensions 17
7 Station class outdoor air switches preferred mounting hole spacing for 600, 1200, and 1600 ampere switches 18
8 Preferred voltage ratings for distribution class outdoor air switches 19
9 Preferred continuous and withstand currents for distribution class outdoor air switches 19
10 Phase spacing and ground clearance for distribution class outdoor air switches and bus supports 20
11 Distribution class outdoor air switches - pole unit dimensions 21
12 Preferred voltage ratings for indoor air switches 22
13 Continuous and withstand current for indoor air switches 22
14 Indoor air switches and bus supports-phase spacing and length of break 23
15 Grounding switch electrical clearance 24
16 Preferred rated switching currents for interrupter switches 25
17 Preferred rated control voltages and their ranges 26

Copyright The Institute of Electrical and Electronics Engineers, Inc.
Provided by IHS under license with IEEE
No reproduction or networking permitted without license from IHS
Not for Resale

Foreword (This Foreword is not part of American National Standard C37.32-2002)

The purpose of this revision is to bring the standard up-to-date and in line with present-day requirements. The standard is coordinated with the other American National Standards in the field of high-voltage switches:

ANSI/IEEE C37.30, *Standard Requirements for High-Voltage Air Switches*

IEEE C37.34, *Test Code for High-Voltage Air Switches*

ANSI/IEEE C37.35, *Guide for the Application, Installation, Operation, and Maintenance of High-Voltage Air Disconnecting and Load Interrupter Switches*

ANSI/IEEE C37.36b**,** *Guide to Current Interruption with Horn Gap Air Switches*

ANSI/IEEE C37.37, *Loading Guide for AC High-Voltage Air Switches*

IEEE 1247, *Standard for Interrupter Switches for Alternating Current, Rated above 1000 Volts*

This revision modifies the document title to allow for future inclusion of other types of High-Voltage Switches and to harmonize with the direction of the C37.30 series of standards.

This revision includes the changing of the station, distribution and indoor voltage ratings of 8.25 kV, 15.0 kV and 25.8 kV to 8.3 kV, 15.5 kV and 27 kV respectively to harmonize voltage ratings between equipment classes.

Station class voltage ratings of 121 kV, 169 kV and 242 kV have been changed to 123 kV, 170 kV and 245 kV respectively to harmonize with AC High Voltage Circuit Breakers C37.06-2000 and IEC.

Metrification of the document has continued by placing the metric equivalents first in the text and tables while retaining the inch - pound system in parentheses.

Circuit switchers are excluded from this standard.

The annexes are for information only and are not considered a part of the standard.

Suggestions for the improvement of this standard will be welcome. They should be sent to the National Electrical Manufacturers Association, 1300 North 17th Street, Suite 1847, Rosslyn, VA 22209.

This standard was processed and approved for submittal to ANSI by the Accredited Standards Committee on Power Switchgear, C37. Committee approval of the standard does not necessarily imply that all members voted for its approval. At the time it approved this standard, the C37 Committee had the following members:

E. Byron, Chairman
A. K. McCabe, Executive Vice-Chairman, HV Standards
J. Scott, Executive Vice-Chairman, LV Standards
D.L. Swindler, Executive Vice-Chairman, IEC Activities
M. Calwise, Secretary

--`,-`-`,,`,,`,`,,`---

Copyright The Institute of Electrical and Electronics Engineers, Inc.
Provided by IHS under license with IEEE
No reproduction or networking permitted without license from IHS Not for Resale

Organizations Represented:	*Name of Representative:*
Electric Light and Power Group	D.E. Galicia
.....	J.L. Koepfinger
.....	G.J. Martuscello
.....	Y. Musa
.....	E. Worland
Institute of Electrical and Electronics Engineers	T. Burse
.....	K. Gray
.....	A. Monroe
.....	B. Puckett
.....	T.E. Royster
.....	R. Garzon (Alt)
.....	J.G. Wood (Alt)
National Electrical Manufacturers Association	G. Jones
.....	W. Long
.....	T. Olsen
.....	G. Sakats
.....	D. Stone
.....	E. Byron (Alt)
International Electrical Testing Association	A. Peterson
National Electrical Contractors Association	D. Harwood
Testing Laboratory Group	P. Notarian
.....	A. Harkness
Tennessee Valley Authority	D. Reynolds
U.S. Dept. Of the Army-Office of the Chief of Engineers	J.A. Gilson
U.S. Dept. of the Navy-Naval Construction Battalion Center	D.L. Mills

Power Switching Equipment Technical Committee SG VI of the National Electrical Manufacturers Association's Switchgear Section, which revised and approved this standard, had the following personnel at the time of approval:

R. Brown, Chairman
M. Allen
J. Angelis
M. Beard
M. Dunagin
G. Kamber
R. Reed
R. Reynolds
G. Sakats

--`,,`-`-`,,`,,`,`,,`---

Copyright The Institute of Electrical and Electronics Engineers, Inc.
Provided by IHS under license with IEEE
No reproduction or networking permitted without license from IHS

Not for Resale

This page intentionally left blank.

Copyright © 2003 IEEE All Rights Reserved

Copyright The Institute of Electrical and Electronics Engineers, Inc.
Provided by IHS under license with IEEE
No reproduction or networking permitted without license from IHS

Not for Resale

AMERICAN NATIONAL STANDARD **ANSI C37.32-2002**

For High Voltage Switches, Bus Supports, and Accessories— Schedules of Preferred Ratings, Construction Guidelines and Specifications

1 Introduction

1.1 Scope

This standard provides the schedules of preferred ratings and construction specifications for high-voltage disconnect, interrupter, fault initiating, and grounding switches rated above 1000 volts. Switch operator control voltage ranges (formerly C37.33), bus supports and accessories are also covered by this standard. Switches included in C37.20.2, C37.20.3, C37.20.4, C37.71, C37.72 and C37.73 are not covered by this standard.

1.2 References

The following standards are referenced by this text or have content relevant to the apparatus covered by this standard. At the time of publication, the editions indicated were valid. All standards are subject to revision, and parties to agreements based on this American National Standard are encouraged to investigate the possibility of applying the most recent editions of the standards indicated below.

ANSI C29.8-1985 (R1995), *Wet-Process Porcelain Insulators-Apparatus, Cap and Pin Type*

ANSI C29.9-1983 (R1996), *Wet-Process Porcelain Insulators-Apparatus, Post Type*

NEMA SG 6-2000, *Power Switching Equipment*

NEMA 107-1987 (R1993) *Methods of Measurement of Radio Influence Voltage (RIV) of High-Voltage Apparatus*

ANSI/IEEE C37.30-1998, *Standard Requirements for High-Voltage Switches*

IEEE C37.34-1994, *Test Code for High-Voltage Air Switches*

ANSI/IEEE C37.35-1996, *Guide for the Application, Installation, Operation, and Maintenance of High Voltage Air Disconnecting and Load Interrupter Switches*

ANSI/IEEE C37.36b-1990 (R1996), *Guide to Current Interruption with Horn Gap Air Switches*

ANSI/IEEE C37.37-1996, *Loading Guide for AC High-Voltage Air Switches (in Excess of 1000 Volts)*

ANSI/IEEE C37.38-1989, *Gas-Insulated, Metal-Enclosed Disconnecting, Interrupter, and Grounding Switches*

IEEE 1247-1998, *Standard for Interrupter Switches for Alternating Current, Rated Above 1000 Volts*

IEEE C37.100-1992, *Standard Definitions for Power Switchgear*

ANSI/IEEE 142-1991, *Practice for Grounding of Industrial and Commercial Power Systems*

IEC 815-1986, *Guide for the Selection of Insulators in Respect of Polluted Conditions*

Copyright © 2003 IEEE All Rights Reserved

Copyright The Institute of Electrical and Electronics Engineers, Inc.
Provided by IHS under license with IEEE
No reproduction or networking permitted without license from IHS Not for Resale

2 Definitions

The definitions of terms contained in this document, or in other standards referred to in this document, are not intended to embrace all legitimate meanings of the terms. They are applicable only to the subject treated in this standard. An asterisk (*) following a definition indicates that at the time this standard was approved, there was no corresponding definition in C37.100. Refer to C37.100 for additional definitions.

2.1 outdoor switch: Switches designated for operation outside buildings or enclosures. Outdoor switches may be exposed to the weather. Outdoor switches experience no restriction of heat transfer to the ambient. *

2.2 indoor switch: Switches designated for operation inside buildings or weather-resistant enclosures, which do not restrict heat transfer to the ambient. *

2.3 enclosed switch: Switches designated for operation within a housing restricting heat transfer to the external medium.

2.4 station class: A descriptive term used to denote application or restriction or both to generating stations, switching stations, substations, and transmission lines. *

2.5 distribution class: A descriptive term used to denote application or restriction or both to that part of an electric system between the substation and the customer. *

3 Station Class Outdoor Air Disconnect Switches

3.1 Basis of preferred ratings

The ratings of station class outdoor disconnect switches shall be based upon the definitive conditions specified in C37.30.

3.2 Preferred ratings

3.2.1 Voltage and current

The preferred voltage, continuous current, and withstand current ratings at the rated power frequency of 50 or 60 Hz shall be in accordance with tables 1, 2, and 3.

3.2.1.1 Short-time withstand current duration

The preferred short-time withstand current test duration is 1, 2, or 3 seconds with allowable I^2t variations given in C37.34.

3.2.1.2 Peak withstand current duration

The preferred peak withstand current test duration is 167 milliseconds.

3.2.2 Ice breaking ability

If an outdoor switch has an ice breaking rating, the preferred ratings shall be 10 mm (3/8 inch), and 19 mm (3/4 inch). A switch that has successfully passed the ice test and is rated for a given thickness of ice is also rated for lesser thickness.

Copyright © 2003 IEEE All Rights Reserved

Copyright The Institute of Electrical and Electronics Engineers, Inc.
Provided by IHS under license with IEEE
No reproduction or networking permitted without license from IHS Not for Resale

3.2.3 Mechanical operations

The preferred mechanical operation rating shall be 1000 operations: 900 close-open cycles without terminal loading and 100 close-open cycles with terminal loading as specified in C37.34. Refer to table 17 for rated control voltages for motor-operated switches and C37.34 for number of operations at minimum and maximum control voltage.

3.2.4 Terminal loading

The preferred mechanical terminal loadings shall be in accordance with table 4.

3.3 Dielectric test voltages

3.3.1 Energized parts to ground

Outdoor switches in either the open or closed positions shall withstand the voltages specified in table 1, columns 2, 3, and 4. See note 1 of table 1 and table 2 for switching impulse ratings.

3.3.2 Open gap withstand

The air gap of fully open outdoor air switches shall withstand voltages that are 1.10 times the rated lightning impulse dry withstand and the power-frequency dry withstand voltages given in columns 2 and 3 of table 1. For switches rated 362 kV and higher, the open gap shall also withstand the switching impulse voltages specified in table 2.

Station class outdoor air switches having solid insulation material across the open gap shall withstand 100 percent of the voltages given in table 1 columns 2, 3 and 4.

3.3.3 Corona and radio influence test voltage limits

Switches rated 123 kV and higher when tested under dark conditions at the voltage levels specified in table 1, column 5 shall be free of visible plumes or spikes. The limits of radio-influence voltage are given in column 6. Refer to C37.34, and NEMA 107 for testing procedures.

3.4 Construction specifications

3.4.1 Insulators

Insulator units shall have electrical characteristics and leakage distance values equal to or exceeding those listed for equivalent insulation in C29.8 or C29.9. Refer to C37.35 and IEC 815 for insulator creepage distance considerations under contaminated conditions. Insulators shall have sufficient mechanical strength to withstand applicable operating forces, including magnetic forces produced by the rated peak withstand current of the switches for which they are supplied, as specified in table 3.

3.4.2 Arrangement and size of bolt holes in terminal pads

Bolt hole centerlines in terminal pads, when used, shall be as shown in figure 1. Holes shall accommodate bolts that are ½ inch (12 mm) in diameter.

3.4.3 Phase spacing (pole spacing)

Phase spacing for outdoor switches and bus supports shall be as specified in table 5.

Copyright © 2003 IEEE All Rights Reserved

Copyright The Institute of Electrical and Electronics Engineers, Inc.
Provided by IHS under license with IEEE
No reproduction or networking permitted without license from IHS Not for Resale

3.4.4 Ground clearance

Ground clearance for outdoor switches and bus supports shall equal or exceed that specified in table 5.

3.4.5 Single-pole switch dimensions

Minimum metal-to-metal, single-pole air gap distances (switch full open position) and centerline-to-centerline spacings of insulator columns are listed in table 6. The air gap distance is based upon being at least 10 percent in excess of the minimum clearance to ground as given in table 5. These dimensions may be modified depending upon dielectric test results (See 3.3.2).

3.4.6 Base mounting holes

Spacing for the base mounting holes for 600, 1200, and 1600 ampere switches should be as specified in table 7. Other spacings can be used. Switches rated through 48.3 kV shall have base mounting holes at least 14 mm (9/16 inch) in diameter. Switches rated 72.5 kV and above shall have base mounting holes at least 17 mm (11/16 inch) in diameter.

4 Distribution Class Outdoor Air Disconnect Switches

4.1 Basis of preferred ratings

The ratings of distribution class outdoor air disconnect switches shall be based upon the definitive conditions specified in C37.30.

4.2 Preferred ratings

4.2.1 Voltage and current

The preferred voltage, continuous current and withstand current ratings at the rated power frequency of 50 or 60 Hz shall be in accordance with tables 8 and 9.

4.2.1.1 Short-time withstand current duration

The preferred short-time withstand test current duration is 1, 2 or 3 seconds with allowable I^2t variations given in C37.34.

4.2.1.2 Peak withstand current duration

The preferred peak withstand current test duration is 167 milliseconds.

4.2.2 Ice breaking ability

Refer to 3.2.2 for preferred ratings.

4.2.3 Mechanical operations

The preferred number of mechanical operations shall be as specified in 3.2.3.

4.2.4 Terminal loading

The preferred mechanical terminal loading shall be in accordance with table 4.

Copyright © 2003 IEEE All Rights Reserved

Copyright The Institute of Electrical and Electronics Engineers, Inc.
Provided by IHS under license with IEEE
No reproduction or networking permitted without license from IHS Not for Resale

4.3 Dielectric test voltages

4.3.1 Energized parts to ground

Outdoor switches in either the open or closed positions shall withstand the voltages specified in table 8, columns 2, 3 and 4.

4.3.2 Open gap withstand

The air gap of fully open outdoor switches shall withstand voltages that are 1.10 times the rated lightning impulse dry withstand and the power-frequency dry withstand voltages given in columns 2 and 3 of table 8.

Distribution class outdoor air switches having solid insulation material across the open gap shall withstand 100 percent of the voltages given in table 8, columns 2, 3 and 4.

4.3.3 Corona and radio influence test voltage limits

Switches rated below 123 kV have no corona or radio influence voltage requirements.

4.4 Construction specifications

4.4.1 Insulators

Insulators shall have electrical characteristics and leakage distance values such as to coordinate with the switch dielectric test voltage withstand requirements of 4.3.1. Refer to C37.35 and IEC 815 for insulator creepage distance considerations under contaminated conditions. The insulators shall have sufficient strength to withstand the applicable operating force, including magnetic force produced by the rated peak withstand current of the switch to which they are applied, as specified in table 9.

4.4.2 Arrangement and size of bolt holes in terminal pads

Bolt hole centerlines shall be as shown in figure 1. Holes shall accommodate bolts that are ½ inch (12mm) in diameter.

4.4.3 Phase spacing (pole spacing)

Phase spacing for distribution class switches and bus supports shall be as specified in table 10.

4.4.4 Ground clearance

Ground clearance for distribution class switches and bus supports shall equal or exceed that specified in table 10.

4.4.5 Single pole switch dimensions

The minimum metal-to-metal single pole air gap distances (switch full open position) shall be as listed in table 11 with possible modifications as noted.

5 Indoor Air Switches

5.1 Basis of preferred ratings

The ratings of indoor air switches shall be based upon the definitive conditions specified in C37.30, except that they are not subjected to wind loads and they do not have ice breaking ratings.

Copyright © 2003 IEEE All Rights Reserved

Copyright The Institute of Electrical and Electronics Engineers, Inc.
Provided by IHS under license with IEEE
No reproduction or networking permitted without license from IHS Not for Resale

5.2 Preferred ratings

5.2.1 Voltage and current

The preferred voltage, and preferred continuous and withstand current ratings at the rated power frequency of 50 or 60 Hz shall be in accordance with tables 12 and 13.

5.2.1.1 Short-time withstand current duration

The preferred short-time withstand current test duration is 1, 2, or 3 seconds with allowable I^2t variations given in C37.34.

5.2.1.2 Peak withstand current duration

The preferred peak withstand current test duration is 167 milliseconds.

5.2.2 Mechanical operations

The preferred number of mechanical operations shall be as given in 3.2.3.

5.2.3 Terminal loading

Presently, there are no preferred mechanical terminal loadings for indoor switches.

5.3 Dielectric test voltages

5.3.1 Energized parts to ground

Indoor air switches, in either the open or closed positions, shall withstand the dielectric test voltages specified in columns 2, 3, and 4 of table 12.

5.3.2 Open gap withstand

The air gap of fully open indoor air switches shall withstand voltages that are 1.10 times the lightning impulse dry and power-frequency dry withstand test voltages specified in columns 2 and 4 of table 12.

Indoor air switches having solid insulation material across the open gap shall withstand 100 percent of the voltages given in table 12, columns 2, 3 and 4.

5.3.3 Corona and radio influence test voltage limits

Switches rated below 123 kV have no corona or radio influence voltage requirements.

5.4 Construction specifications

5.4.1 Insulators

Insulator units shall have electrical characteristics and leakage distance values such as to coordinate with the switch dielectric test voltage withstand requirements of 5.3. The insulators shall have sufficient strength to withstand the applicable operating force, including the magnetic force produced by the rated peak withstand current of the switch to which they are applied, as specified in table 13.

5.4.2 Arrangement and size of bolt holes in terminal pads

The arrangement of bolt hole centerlines in terminal pads, when used, shall be as shown in figure 1. Holes shall accommodate bolts that are ½ inch (12mm) in diameter.

Copyright © 2003 IEEE All Rights Reserved

Copyright The Institute of Electrical and Electronics Engineers, Inc.
Provided by IHS under license with IEEE
No reproduction or networking permitted without license from IHS Not for Resale

5.4.3 Phase spacing

The minimum metal-to-metal clearance between phases for indoor air switches and bus supports shall be as specified in table 14.

5.4.4 Single pole switch dimensions

The minimum metal-to-metal single pole air gap distances (switch full open position) shall be as specified in table 14 with possible exceptions as noted.

6 Grounding Air Switches

6.1 Basis of preferred ratings

The ratings of high-voltage grounding switches shall be based upon the definitive conditions specified in C37.30.

6.2 Preferred ratings

6.2.1 Voltage and current

The preferred voltage and withstand current ratings at the rated power frequency of 50 or 60 Hz shall be in accordance with tables 1, 3, 8, 9, 12, and 13. Grounding switches have no continuous current ratings but have withstand current ratings which may be equal to or less than the disconnect switch rating.

6.2.1.1 Short-time withstand current duration

The preferred short-time withstand current test duration is 1, 2 or 3 seconds with allowable I^2t variations given in C37.34.

6.2.1.2 Peak withstand current duration

The preferred peak withstand current test duration is 167 milliseconds.

6.2.2 Ice breaking ability

Refer to 3.2.2 for preferred ratings for outdoor switches. Indoor switches have no ice breaking requirements.

6.3 Electrical clearances

The electrical clearance between the grounding blade and the nearest energized part during ground blade travel shall be equal to or greater than the minimum gap distance listed in table 15. In the fully open position of the grounding blade, the switch shall withstand the voltages listed in columns 2, 3, and 4 of tables 1, 8, and 12.

6.4 Corona and radio influence test voltage limits

Switches rated 123 kV and higher when tested under dark conditions at the voltage levels specified in table 1, column 5 shall be free of visible plumes or spikes. The limits of radio-influence voltage are given in column 6. Refer to C37.34 and NEMA 107 for testing procedures.

6.5 Construction specifications

Construction specifications for grounding switches shall be in accordance with the requirements specified in 3.4, 4.4, or 5.4.

Copyright © 2003 IEEE All Rights Reserved

Copyright The Institute of Electrical and Electronics Engineers, Inc.
Provided by IHS under license with IEEE
No reproduction or networking permitted without license from IHS
Not for Resale

7 Fault Initiating Switches

7.1 Basis of preferred ratings

The ratings of high-voltage fault initiating switches shall be based upon the definitive conditions specified in C37.30.

7.2 Preferred ratings

The preferred fault-making current ratings of fault initiating switches at the rated power frequency of 50 or 60 Hz shall be 9.5, 12.5, 20, 25 or 38 kA rms symmetrical. Peak withstand current ratings are 24.7, 32.5, 52, 65 and 99 kA respectively for 60 Hz ratings and 23.7, 31.3, 50, 63, and 95 kA respectively for 50 Hz ratings.

7.2.1 Short time withstand current duration

The preferred short-time withstand test current duration is 1, 2 or 3 seconds with allowable I^2t variations given in C37.34.

7.2.2 Peak withstand current duration

The preferred peak withstand current test duration is 167 milliseconds.

7.3 Preferred closing time

The preferred closing time, which includes blade travel to close the switch, shall not exceed 0.5 seconds.

7.4 Operating life expectancies

The manufacturer should be consulted for operating life expectancies for fault initiating switches.

7.5 Corona and radio influence test voltage limits

Switches rated 123kV and higher when tested under dark conditions at the voltage levels specified in table 1, column 5 shall be free of visible plumes or spikes. The limits of radio-influence voltage are given in column 6. Refer to C37.34 and NEMA 107 for testing procedures.

7.6 Construction specifications

Construction specifications for fault initiating switches shall be in accordance with the requirements specified in 3.4, 4.4, or 5.4.

8 Outdoor, Indoor, and Enclosed Interrupter Switches

8.1 Basis of preferred ratings

The ratings of interrupter switches shall be based upon the definitive conditions specified in C37.30.

8.2 Preferred rated power frequency

The preferred rated power frequency of interrupter switches shall be 50 or 60 Hz.

8.3 Preferred rated voltages

Copyright © 2003 IEEE All Rights Reserved

Copyright The Institute of Electrical and Electronics Engineers, Inc.
Provided by IHS under license with IEEE
No reproduction or networking permitted without license from IHS Not for Resale

8.3.1 Rated maximum voltage

The preferred rated maximum voltage shall be as given in column 1 of tables 1, 8, and 12.

8.3.2 Rated loop splitting voltage

The preferred rated loop splitting voltage is 20 percent of the rated maximum voltage.

8.3.3 Rated differential capacitance voltage range

The preferred limits for the differential capacitance voltage range are 100 volts for the lower limit and 4 percent of rated maximum voltage for the upper limit.

8.4 Preferred rated dielectric withstand

8.4.1 Preferred rated power frequency withstand voltages

8.4.1.1 Rated live parts-to-ground dry withstand voltage

Live parts-to-ground withstand voltage shall be as given in table 1, column 3; table 8, column 3; and table 12, column 4.

8.4.1.2 Rated live parts-to-ground wet withstand voltage

Live parts-to-ground wet withstand voltage for outdoor interrupter switches shall be as given in table 1, column 4 and table 8, column 4.

8.4.1.3 Rated live parts-to-ground dew withstand voltage

Indoor and enclosed interrupter switches shall withstand the test voltages specified in column 3 of table 12.

8.4.2 Preferred rated lightning impulse dry withstand voltage

8.4.2.1 Rated live parts-to-ground withstand voltage

These withstand voltages shall conform to table 1, column 2; table 8, column 2; or table 12, column 2.

8.4.3 Preferred rated switching impulse withstand voltage

Interrupter switches rated 362 kV and higher shall withstand switching impulse voltages as specified in table 2, columns 3 and 4.

8.4.4 Open gap withstand

The air gap of fully open interrupter switches shall withstand voltages that are 1.10 times the rated lightning impulse dry withstand and the power frequency dry withstand voltages given in table 1, columns 2 and 3; table 8, columns 2 and 3; or table 12, columns 2 and 4. For switches rated 362 kV and higher, the open gap shall also withstand the switching impulse voltages specified in table 2, columns 3 and 4.

Interrupter switches having solid insulation material across the open gap shall withstand 100 percent of the voltages given in table 1, columns 2 and 3; table 8, columns 2 and 3; or table 12, columns 2 and 4.

Copyright © 2003 IEEE All Rights Reserved

Copyright The Institute of Electrical and Electronics Engineers, Inc.
Provided by IHS under license with IEEE
No reproduction or networking permitted without license from IHS
Not for Resale

Outdoor interrupter switches with solid insulation across the open gap shall also withstand the rated wet withstand voltage given in table 1, column 4 or table 8, column 4.

Indoor or enclosed interrupter switches with solid insulation across the open gap shall also withstand the rated dew withstand voltage given in table 12, column 3.

8.4.5 Corona and radio influence test voltage limits

Switches rated 123 kV and higher when tested under dark conditions at the voltage levels specified in table 1, column 5 shall be free of visible plumes or spikes. The limits of radio-influence voltage are given in column 6. Refer to C37.34 and NEMA 107 for testing procedures.

8.5 Preferred rated currents

8.5.1 Preferred rated continuous current

The continuous current ratings shall be as given in tables 3, 9, and 13.

8.5.2 Preferred rated withstand currents

The rated withstand currents shall be as given in tables 3, 9, and 13.

8.5.3 Preferred rated withstand current duration

The preferred short-time withstand current test duration is 1, 2, or 3 seconds with allowable I^2t variations given in IEEE 1247.

8.5.4 Preferred peak withstand current duration

The preferred peak withstand current test duration is 167 milliseconds.

8.5.5 Preferred rated fault-making current

The rated fault-making currents shall be as given in 7.2.

8.5.6 Preferred rated switching currents

Rated switching currents for interrupter switches shall be as specified in table 16.

8.6 Preferred rated switching endurance

Rated switching operation endurances for interrupter switches are dependent on the application and the many different interrupter switch designs. Ratings are established by agreement between user and manufacturer.

8.7 Preferred rated ice breaking ability

The preferred ice breaking ratings shall be as given in 3.2.2. Indoor and enclosed switches have no ice breaking requirements.

8.8 Preferred rated control voltage

Rated control voltages and their ranges shall be as given in table 17.

Copyright © 2003 IEEE All Rights Reserved

Copyright The Institute of Electrical and Electronics Engineers, Inc.
Provided by IHS under license with IEEE
No reproduction or networking permitted without license from IHS Not for Resale

8.9 Preferred rated mechanical operations

Rated mechanical operations of outdoor, indoor, and enclosed interrupter switches shall conform to 3.2.3.

8.10 Preferred rated terminal loading

The preferred rated terminal loadings for outdoor interrupter switches are specified in 3.2.4. Indoor and enclosed switches have no preferred rated terminal loadings.

8.11 Construction specifications

8.11.1 Phase spacing of interrupter switches

The phase spacing shall be in accordance with tables 5, 10, and 14. Interrupter switches having large lateral extensions of live parts beyond the insulators or unconfined switching arcs may require greater phase spacings and the manufacturer should be consulted.

8.11.2 Insulators

Insulators for interrupter switches shall be in accordance with the requirements specified in 3.4.1, 4.4.1, or 5.4.1.

9 Bus Supports

9.1 Insulators

Insulators for bus supports shall be in compliance with the requirements specified in 3.4.1, 4.4.1, or 5.4.1.

9.2 Fittings

The strength classification of fittings for outdoor bus supports, expressed in terms of the gradually applied load that the fitting shall withstand without failure or fracture of any parts, shall be as follows:

Class designation	Load		Applicable bolt circle	
	kN	(lbs)	mm	(inches)
Standard strength	8.9	(2000)	76 or 127	(3 or 5)
High strength	17.8	(4000)	127	(5)

In all cases, the load shall be applied to the fitting in a plane parallel to its mounting surface, perpendicular to the length of the conductor at its centerline.

9.3 Phase spacing

The phase spacing of bus supports shall be in accordance with columns 3 and 6 of table 5 and table 10 and column 2 of table 14.

10 Switch Accessories, Operating Mechanisms, and Switch Hooks

10.1 Rated control voltages for power-operated mechanisms

10.1.1 Control voltages and their ranges

Copyright © 2003 IEEE All Rights Reserved

Copyright The Institute of Electrical and Electronics Engineers, Inc.
Provided by IHS under license with IEEE
No reproduction or networking permitted without license from IHS Not for Resale

The rated control voltages and their ranges for power-operated mechanisms used on high-voltage air switches shall be as shown in table 17. Operating, auxiliary, and tripping functions shall perform satisfactorily when control voltages are within the ranges given in the table.

10.1.2 Voltage range measurement conditions

Voltage measurements shall be made at the control power input terminals of the mechanism. Maximum voltages are measured at no-load* and minimum voltages with operating currents flowing.

*Maximum voltage at no-load recognizes battery charging and equalizing techniques. Control circuits must dielectrically withstand the high voltage, which also occurs if maximum voltage is maintained with operating current flowing. It is not necessary to maintain the high voltage level as long as the voltage remains within the specified range. This obviates the need for a higher than maximum voltage to maintain the stated maximum voltage with operating current flowing. However, the minimum voltage must be maintained with operating current flowing to verify proper operation.

10.1.3 Torque requirements

Power-operated mechanisms shall develop the manufacturer’s rated torque when operating at the preferred rated voltages given in table 17.

10.1.4 Power-operated mechanism characteristics

Motor-operating mechanisms for outdoor switches shall have a torque at the output shaft under minimum operating voltage adequate to operate the switch under rated ice conditions, e.g., 10 mm (3/8 inch) or 19 mm (3/4 inch) as specified in C37.34. Operating time and torque value required should be in accordance with the manufacturer's recommendation.

10.2 Hook stick lengths and hook dimensions

The lengths of hook sticks depend on work rules and other regulations not covered by this standard. See figure 2 for hook dimensions.

Copyright © 2003 IEEE All Rights Reserved

Copyright The Institute of Electrical and Electronics Engineers, Inc.
Provided by IHS under license with IEEE
No reproduction or networking permitted without license from IHS Not for Resale

Table 1 – Preferred voltage ratings for station class outdoor air switches

Line Number	Rated maximum voltage kV rms	Rated withstand voltages			Corona & radio influence voltage	
		Lightning impulse[1] kV peak	Power frequency kV rms		Test[2] voltage kV rms	Limit of RIV[3] µV @ 1 MHz
			Dry 1 minute	Wet 10 second		
	(1)	(2)	(3)	(4)	(5)	(6)
1	8.3	95	38	30	-	-
2	15.5	110	50	45	-	-
3	27	150	70	60	-	-
4	38	200	95	80	-	-
5	48.3	250	120	100	-	-
6	72.5	250	120	100	-	-
7		**350**[4]	175	145	-	-
8	123	350	175	145	78	500
9		450	235	190	78	500
10		**550**[4]	280	230	78	500
11	145	350	175	145	92	500
12		450	235	190	92	500
13		550	280	230	92	500
14		**650**[4]	335	275	92	500
15	170	450	235	190	108	500
16		550	280	230	108	500
17		650	335	275	108	500
18		**750**[4]	385	315	108	500
19	245[5]	550	280	230	156	500
20		650	335	275	156	500
21		750	385	315	156	500
22		**900**[4]	465	385	156	500
23		1050	545	455	156	500
24	362	1050	545	455	230	500
25		**1300**[4]	610	525	230	500
26	550	1550	710	620	349	500
27		**1800**[4]	810	710	349	500
28	800	2050	940	830	508	750

NOTES –

1 For switches rated 362 kV and higher, see table 2 for values of rated switching impulse withstand voltages.

2 The test voltages are 110 percent of the rated maximum line-to-neutral voltage. It is not necessary to retest switches previously tested and acceptable at 105 percent. It is not necessary to retest switches previously rated at 121 kV, 169 kV and 242 kV.

3 If equipment of any given rated maximum voltage is used on a circuit of higher voltage rating, the radio influence voltage limit and test voltage for the equipment shall be that corresponding to the rated maximum voltage of the circuit.

4 Modern arrester technology enables use of lower lightning impulse rated equipment in some applications. The traditional values are shown in bold font.

5 The switches listed in lines 19 through 28 are intended for application on systems effectively grounded as defined in ANSI/IEEE 142.

Copyright © 2003 IEEE All Rights Reserved

Copyright The Institute of Electrical and Electronics Engineers, Inc.
Provided by IHS under license with IEEE
No reproduction or networking permitted without license from IHS

Not for Resale

Table 2 – Preferred switching impulse withstand voltages for station class outdoor air switches

Line Number (from table 1)	Rated maximum voltage kV rms (1)	Rated lightning impulse kV peak (2)	Switching impulse withstand voltages kV peak	
			To ground[1] (3)	Across open gap[2] (4)
24	362	1050	750	655 + (295)
25	362	1300	885	825 + (295)
26	550	1550	1050	880 + (450)
27	550	1800	1150	1000+ (450)
28	800	2050	1300	1000+ (650)

NOTES –

1 Line-to-ground insulation strength is based upon 97.7 percent probability of withstand where the standard deviation is 6 percent. See C37.34.

2 Values in parenthesis are 60 Hz bias voltages expressed in kVp units (column 1 voltage x $\sqrt{2}$ /$\sqrt{3}$). The summation of this opposite polarity bias voltage and the associated open gap switching impulse voltage is equal to a 97.7 percent probability of line-to-ground flashover (Critical Flashover + 2σ). See C37.34.

Table 3 – Preferred continuous and withstand currents for station class outdoor air switches

Line Number	Rated continuous current amperes (1)	Withstand currents		
		Short-time kA (2)	Peak	
			60 Hz[1] kA (3)	50 Hz kA (4)
1	600	25	65	63
2	1200	38	99	95
3	1600	44	114	110
4	2000	44	114	110
5	2000	63	164	158
6	3000	63	164	158
7	3000	75	195	188
8	4000	75	195	188

NOTE –

1 Peak withstand current (kA) ≈ 1.625 times the rms asymmetrical momentary current (kA). Switches previously rated at 40, 61, 70, 100 and 120 kA rms asymmetrical momentary are closely equivalent to the above peak withstand current ratings and do not require retesting.

Copyright © 2003 IEEE All Rights Reserved

Copyright The Institute of Electrical and Electronics Engineers, Inc.
Provided by IHS under license with IEEE
No reproduction or networking permitted without license from IHS

Not for Resale

Table 4 – Terminal loadings for high-voltage switches

Line Number	Maximum voltage kV (1)	Current rating amperes (2)	F1 and F2 N (3)	F1 and F2 (lbs) (3)	F3 N (4)	F3 (lbs) (4)	F4 N (5)	F4 (lbs) (5)
1	4.8-72.5	200-1200	400	(90)	130	(30)	130	(30)
2	"	> 2000	400	(90)	130	(30)	130	(30)
3	123-170	600-1600	530	(120)	180	(40)	490	(110)
4	"	> 2000	530	(120)	180	(40)	1110	(250)
5	245-362	1200-1600	800	(180)	270	(60)	1670	(375)
6	"	> 2000	1020	(230)	330	(75)	3040	(685)
7	≥ 550	All	2000	(450)	670	(150)	3330	(750)

NOTES –

1 Terminal loadings F1, F2, F3, and F4 incorporate considerations for weight of typical connected bus conductors having ice and wind loads, expansion loads, and limited moment forces. It is recommended that the manufacturer be consulted on forces that exceed those given in table 4. These higher forces may be due to long bus spans rigidly connected to switches, extra high short circuit current forces, bus spans other than aluminum tube conductors, and other forces not considered.

2 These loadings were derived for the mechanical operations requirement of C37.34 and do not necessarily represent the mechanical loading limit on terminals. Consult the manufacturer when actual values are needed.

3 At 245 kV and above, F4 forces may be reduced by 40% for switches with hinged or pivoting type terminals.

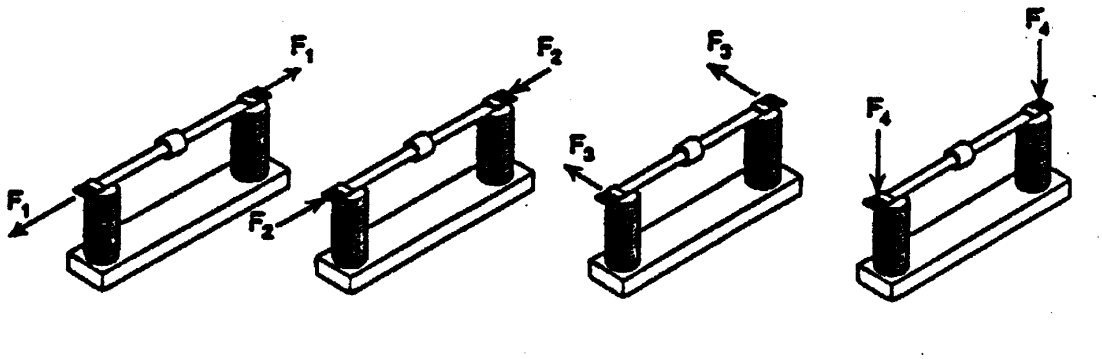

Copyright © 2003 IEEE All Rights Reserved

Copyright The Institute of Electrical and Electronics Engineers, Inc.
Provided by IHS under license with IEEE
No reproduction or networking permitted without license from IHS

Not for Resale

Table 5 – Phase spacing and ground clearance for station class outdoor air switches and bus supports

Line Number	Rated maximum voltage kV rms (1)	Rated lightning withstand voltage[1] kV Peak (2)	Minimum metal-to-metal distance disconnecting switches, bus supports and rigid conductors[2] mm (3)	(inches) (3)	Ground clearance[3] Recommended mm (4)	(inches) (4)	Minimum mm (5)	(inches) (5)	Centerline-to-centerline phase spacing[4] Vertical break disconnecting switches and bus supports mm (6)	(inches) (6)	Side break (horizontal break) disconnecting switches mm (7)	(inches) (7)	All horn gap Switches (vertical and side break) mm (8)	(inches) (8)
1	8.3	95	178	(7)	191	(7.5)	152	(6)	457	(18)	762	(30)	914	(36)
2	15.5	110	305	(12)	254	(10)	178	(7)	610	(24)	762	(30)	914	(36)
3	27	150	381	(15)	305	(12)	254	(10)	762	(30)	914	(36)	1220	(48)
4	38	200	457	(18)	381	(15)	330	(13)	914	(36)	1220	(48)	1520	(60)
5	48.3	250	533	(21)	457	(18)	432	(17)	1220	(48)	1520	(60)	1830	(72)
6	72.5	250	533	(21)	457	(18)	432	(17)	1220	(48)	1520	(60)	1830	(72)
7		**350**	787	(31)	737	(29)	635	(25)	1520	(60)	1830	(72)	2130	(84)
8	123	350	787	(31)	737	(29)	635	(25)	1520	(60)	1830	(72)	2130	(84)
9		450	1120	(44)	991	(39)	846	(34)	1830	(72)	2310	(91)	2620	(103)
10		**550**	1350	(53)	1190	(47)	1070	(42)	2130	(84)	2740	(108)	3050	(120)
11	145	350	787	(31)	737	(29)	635	(25)	1520	(60)	1830	(72)	2130	(84)
12		450	1120	(44)	991	(39)	846	(34)	1830	(72)	2310	(91)	2620	(103)
13		550	1350	(53)	1190	(47)	1070	(42)	2130	(84)	2740	(108)	3050	(120)
14		**650**	1600	(63)	1330	(52.5)	1270	(50)	2440	(96)	3350	(132)	3660	(144)
15	170	450	1120	(44)	991	(39)	846	(34)	1830	(72)	2310	(91)	2620	(103)
16		550	1350	(53)	1190	(47)	1070	(42)	2130	(84)	2740	(108)	3050	(120)
17		650	1600	(63)	1330	(52.5)	1270	(50)	2440	(96)	3350	(132)	3660	(144)
18		**750**	1830	(72)	1560	(61.5)	1470	(58)	2740	(108)	3960	(156)	4270	(168)
19	245	550	1350	(53)	1190	(47)	1070	(42)	2130	(84)	2740	(108)	3050	(120)
20		650	1600	(63)	1330	(52.5)	1270	(50)	2440	(96)	3350	(132)	3660	(144)
21		750	1830	(72)	1560	(61.5)	1470	(58)	2740	(108)	3960	(156)	4270	(168)
22		**900**	2260	(89)	1930	(76)	1800	(71)	3350	(132)	4870	(192)	4870	(192)
23		1050	2670	(105)	2300	(90.5)	2110	(83)	3960	(156)	5500	(216)	5500	(216)
24	362	1050	2670	(105)	2300	(90.5)	2130	(84)	3960	(156)	5500	(216)	5500	(216)
25		**1300**	3020	(119)	2690	(106)	2640	(104)	4430	(174)	Note 5		6100	(240)
26	550	1550	Note 5		Note 5		3150	(124)	Note 5		Note 5		7620	(300)
27		**1800**	Note 5		Note 5		3660	(144)	7620	(300)	Note 5		8230	(324)
28	800	2050	Note 5		Note 5		4220	(166)	Note 5		Note 5		15240	(600)

NOTES –

1 Close lightning arrester coordination may allow lower lightning impulse values. Traditional values shown in bold font.

2 Minimum metal-to-metal distance may be modified providing proof of performance is substantiated by dielectric tests.

3 Ground clearances for switches with voltages 362 kV and above are based on switching surge voltage levels. Refer to bibliography, Annex C.

4 The phase spacings in columns 6, 7, and 8 are recommended values. Overall width of switch and bus support energized parts, angle of opening of side break switches, etc., may allow a reduction in phase spacing dependent upon voltage concentration on sharp projections. Resultant metal-to-metal distances between phase energized parts should not be less than that shown in column 3.

5 Values not yet established.

© Copyright 2003 by the IEEE. All Rights Reserved

Not for Resale

Copyright The Institute of Electrical and Electronics Engineers, Inc.
Provided by IHS under license with IEEE
No reproduction or networking permitted without license from IHS

Table 6 – Station class outdoor air switch-pole unit dimensions

Line Number	Rated maximum voltage kV rms (1)	Rated lighting Impulse withstand voltage kV Peak (2)	Minimum length of break metal-to-metal[1]				Minimum insulator centerline-to-centerline spacing[1]							
			Single break distance		Double break distance		Single break insulator strength				Double break Insulator strength			
							Standard		High		Standard		High	
			mm (3)	(inches)	mm (4)	(inches)	mm (5)	(inches)	mm (6)	(inches)	mm (7)	(inches)	mm (8)	(inches)
1	8.3	95	178	(7)	Note 2		305	(12)	381	(15)	Note 2		Note 2	
2	15.5	110	254	(10)	"		381	(15)	457	(18)	"		"	
3	27	150	305	(12)	"		457	(18)	533	(21)	"		"	
4	38	200	457	(18)	305	(12)	610	(24)	686	(27)	457	(18)	533	(21)
5	48.3	250	559	(22)	381	(15)	762	(30)	838	(33)	585	(23)	610	(24)
6	72.5	250	559	(22)	381	(15)	762	(30)	838	(33)	585	(23)	616	(24)
7		350	813	(32)	559	(22)	1070	(42)	1140	(45)	762	(30)	864	(34)
8	123	350	813	(32)	559	(22)	1070	(42)	1140	(45)	762	(30)	864	(34)
9		450	Note 2		Note 2		1300	(51)	1370	(54)	889	(35)	Note 2	
10		550	1270	(50)	813	(32)	1520	(60)	Note 2		1070	(42)	"	
11	145	350	813	(32)	559	(22)	1070	(42)	1140	(45)	762	(30)	864	(34)
12		450	Note 2		Note 2		1300	(51)	1370	(54)	889	(35)	Note 2	
13		550	1270	(50)	813	(32)	1520	(60)	Note 2		1070	(42)	"	
14		650	1520	(60)	965	(38)	1830	(72)	"		1220	(48)	"	
15	170	450	Note 2		Note 2		1300	(51)	1470	(54)	889	(35)	Note 2	
16		550	1270	(50)	813	(32)	1520	(60)	Note 2		1070	(42)	"	
17		650	1520	(60)	965	(38)	1830	(72)	"		1220	(48)	"	
18		750	1730	(68)	1120	(44)	2030	(84)	"		1370	(54)	"	
19	245	550	1270	(50)	813	(32)	1520	(60)	Note 2		1070	(42)	Note 2	
20		650	1520	(60)	965	(38)	1830	(72)	"		1220	(48)	"	
21		750	1730	(68)	1120	(44)	2130	(84)	"		1370	(54)	"	
22		900	2130	(84)	1270	(50)	2440	(96)	"		1730	(68)	"	
23		1050	2640	(104)	1450	(57)	2950	(116)	"		1900	(75)	"	
24	362	1050	2640	(104)	1450	(57)	2950	(116)	Note 2		1900	(75)	Note 2	
25		1300	3050	(120)	1680	(66)	3350	(132)	"		2130	(84)	"	
26	550	1550	Note 2		Note 2		Note 2		Note 2		Note 2		Note 2	
27		1800	"		"		"		"		"		"	
28	800	2050	Note 2		Note 2		Note 2		Note 2		Note 2		Note 2	

NOTES –

1 The design of some switches may be such that minimum metal-to-metal distances and centerline-to-centerline spacing conflicts. Where this occurs, minimum metal-to-metal distance should be used. Minimum metal-to-metal distances may be modified provided proof of performance is substantiated by dielectric tests.

2 Values not yet established.

© Copyright 2002 by the National Electrical Manufacturers Association

Not for Resale

Copyright The Institute of Electrical and Electronics Engineers, Inc.
Provided by IHS under license with IEEE
No reproduction or networking permitted without license from IHS

Table 7 – Station class outdoor air switches preferred mounting hole spacing for 600, 1200, and 1600 ampere switches

Line number	Rated maximum voltage kV rms (1)	Hook stick A mm (2)	Hook stick A (inches) (2)	Hook stick B mm (3)	Hook stick B (inches) (3)	Single side break A mm (4)	Single side break A (inches) (4)	Single side break B mm (5)	Single side break B (inches) (5)	Vertical break A mm (6)	Vertical break A (inches) (6)	Vertical break B mm (7)	Vertical break B (inches) (7)
1	8.3	457	(18)	51 or 178	(2 or 7)	610	(24)	76 or 178	(3 or 7)	914	(36)	76 or 178	(3 or 7)
2	15.5	533	(21)	51 or 178	(2 or 7)	610	(24)	76 or 178	(3 or 7)	914	(36)	76 or 178	3 or 7)
3	27	610	(24)	51 or 178	(2 or 7)	686	(27)	76 or 178	(3 or 7)	991	(39)	76 or 178	(3 or 7)
4	38	762	(30)	51 or 178	(2 or 7)	838	(33)	76 or 210	(3 or 8-1/4)	1220	(48)	76 or 210	(3 or 8-1/4)
5	48.3	991	(39)	76 or 210	(3 or 8-1/4)	991	(39)	76 or 210	(3 or 8-1/4)	1370	(54)	76 or 210	(3 or 8-1/4)
6	72.5	1290	(51)	76 or 210	(3 or 8-1/4)	1290	(51)	76 or 210	(3 or 8-1/4)	1750	(69)	76 or 210	(3 or 8-1/4)
7	123	1680	(66)	76 or 210	(3 or 8-1/4)	1830	(72)	210	(8-1/4)	2210	(87)	210	(8-1/4)
8	145	1980	(78)	76 or 210	(3 or 8-1/4)	2130	(84)	210	(8-1/4)	2510	(99)	210	(8-1/4)
9	170	2290	(90)	210	(8-1/4)	2440	(96)	210	(8-1/4)	2820	(111)	210	(8-1/4)

NOTES –
1 "A" Is the dimension along the length of the base and "B" is the dimension along the width of the base.
2 Dimensions for switches above 170 kV not yet established.

© Copyright 2002 by the National Electrical Manufacturers Association

Not for Resale

Copyright The Institute of Electrical and Electronics Engineers, Inc.
Provided by IHS under license with IEEE
No reproduction or networking permitted without license from IHS

Table 8 – Preferred voltage ratings for distribution class outdoor air switches

Line Number	Rated maximum voltage kV rms	Rated withstand voltages		
		Lightning impulse kV Peak	Power frequency kV rms	
			dry 1 minute	wet 10 seconds
	(1)	(2)	(3)	(4)
1	8.3	75	28	24
2	15.5	95	38	30
3	27	125	60	50
4	38	150	70	60

Table 9 – Preferred continuous and withstand currents for distribution class outdoor air switches

Line Number	Rated continuous current amperes	Withstand currents		
		Short-time kA	Peak	
			60 Hz kA	50 Hz kA
	(1)	(2)	(3)	(4)
1	200 or 600	12.5	32.5	31.3
2	600 or 1200	25	65	63
3	1200	38	99	95

Copyright © 2003 IEEE All Rights Reserved

Copyright The Institute of Electrical and Electronics Engineers, Inc.
Provided by IHS under license with IEEE
No reproduction or networking permitted without license from IHS

Not for Resale

Table 10 – Phase spacing and ground clearance for distribution class outdoor air switches and bus supports

Line Number	Rated Maximum Voltage kV rms	Rated lightning impulse withstand voltage kV Peak	Minimum metal-to-metal distance, all disconnecting switches, bus supports, and rigid conductors mm (inches)	Ground clearance		Centerline-to-centerline phase spacing		
				Recommended mm (inches)	Minimum mm (inches)	Vertical break disconnecting switches and bus supports mm (inches)	Side break (horizontal break) disconnecting switches mm (inches)	All horn gap switches (vertical and side break) mm (inches)
	(1)	(2)	(3)	(4)	(5)	(6)	(7)	(8)
1	8.3	75	127 (5)	114 (4.5)	102 (4.0)	305 (12)	457 (18)	610 (24)
2	15.5	95	178 (7)	152 (6.0)	127 (5.0)	457 (18)	559 (22)	711 (28)
3	27	125	229 (9)	191 (7.5)	165 (6.5)	610 (24)	660 (26)	965 (38)
4	38	150	305 (12)	254 (10.0)	229 (9.0)	762 (30)	813 (32)	1,120 (44)

NOTE – The phase spacings in columns 6, 7 and 8 are recommended values. It is recognized that at certain points of application these values may be reduced. Overall width of switch and bus support energized parts, angle of opening of side-break switches, and the like, may allow a reduction in phase spacing, depending on voltage stress concentration on sharp projections. Minimum metal-to-metal distances may be modified provided proof of performance is substantiated by dielectric tests.

© Copyright 2002 by the National Electrical Manufacturers Association

Not for Resale

Copyright The Institute of Electrical and Electronics Engineers, Inc.
Provided by IHS under license with IEEE
No reproduction or networking permitted without license from IHS

© Copyright 2002 by the National Electrical Manufacturers Association

Table 11 – Distribution class outdoor air switches-pole unit dimensions

Line Number	Rated maximum voltage kV rms (1)	Rated lightning impulse withstand voltage kV Peak (2)	Minimum length of break metal-to-metal (3)		Minimum insulator centerline-to-centerline spacing (4)		(5)		(6)	
			Single break distance mm	(inches)	Double break distance mm	(inches)	Single break distance mm	(inches)	Double break distance mm	(inches)
1	8.3	75	127	(5)	-		229	(9)	-	
2	15.5	95	178	(7)	-		279	(11)	-	
3	27	125	229	(9)	-		330	(13)	-	
4	38	150	305	(12)	203	(8)	406	(16)	305	(12)

NOTE – The design of some switches may be such that the minimum metal-to-metal distances and the centerline-to-centerline spacing conflict. Where this occurs, the minimum metal-to-metal distance should be used. Minimum metal-to-metal distances may be modified provided proof of performance is substantiated by dielectric test.

Not for Resale

Copyright The Institute of Electrical and Electronics Engineers, Inc.
Provided by IHS under license with IEEE
No reproduction or networking permitted without license from IHS

Table 12 – Preferred voltage ratings for indoor air switches

Line Number	Rated maximum voltage kV rms	Rated withstand voltages		
		Lightning impulse kV Peak	Power frequency kV	
			Dew 10 seconds	Dry 1 minute
	(1)	(2)	(3)	(4)
1	4.8	60	15	19
2	8.3	75	24	28
3	15.5	95	26	38
4	15.5	110	30	50
5	27	125	40	60
6	38	150	Note 1	80

NOTE –
1 Value has not been established. Consult manufacturer.

Table 13 – Preferred continuous and withstand currents for indoor air switches

Line Number	Rated continuous current amperes	Withstand currents		
		Short-time kA	Peak	
			60 Hz kA	50 Hz kA
	(1)	(2)	(3)	(4)
1	200 or 400	12.5	32.5	31.3
2	600	25	65	63
3	1200	38	99	95
4	2000	50	130	125
5	3000	63	164	158
6	4000	75	195	188
7	5000	100	260	250
8	6000	125	325	313

Copyright © 2003 IEEE All Rights Reserved

Copyright The Institute of Electrical and Electronics Engineers, Inc.
Provided by IHS under license with IEEE
No reproduction or networking permitted without license from IHS Not for Resale

Table 14 – Indoor air switches and bus supports-phase spacing and length of break

Line Number	Rated maximum voltage kV rms	Minimum phase spacing metal-to-metal clearance disconnecting air switches and bus supports[1] mm	(inches)	Minimum length of break metal-to-metal single-break Distances[2] mm	(inches)
	(1)	(2)		(3)	
1	4.8	114	(4.5)	114	(4.5)
2	8.3	152	(6.0)	152	(6.0)
3	15.5	190	(7.5)	190	(7.5)
4	15.5	229	(9.0)	229	(9.0)
5	27	330	(13.0)	330	(13.0)
6	38	457	(18.0)	457	(18.0)

NOTES –

1 Barriers may be used to provide additional safety during operation by preventing accidental contact with live parts. The provision of adequate insulating barriers may allow a modification of these clearances. These minimum clearances may be modified provided proof of performance is substantiated by dielectric test (with due consideration to the effects of electromagnetic forces) in accordance with the values shown in columns 2 and 4 of table 12.

2 Minimum metal-to-metal distances may be modified from the values listed above provided proof of performance is substantiated by the dielectric tests in accordance with C37.34.

Copyright © 2003 IEEE All Rights Reserved

Copyright The Institute of Electrical and Electronics Engineers, Inc.
Provided by IHS under license with IEEE
No reproduction or networking permitted without license from IHS

Not for Resale

Table 15 – Grounding switch electrical clearance

Line Number	Rated maximum voltage kV rms (1)	Rated lightning impulse withstand voltage kV Peak (2)	Minimum gap - grounding switch to live parts mm (3)	(inches) (3)
INDOOR				
1	4.8	60	51	(2)
2	8.3	75	51	(2)
3	15.5	95	51	(2)
4	15.5	110	51	(2)
5	27	125	76	(3)
6	38	150	102	(4)
DISTRIBUTION CLASS OUTDOOR				
7	8.3	75	51	(2)
8	15.5	95	51	(2)
9	27	125	76	(3)
10	38	150	102	(4)
STATION CLASS OUTDOOR				
11	8.3	95	51	(2)
12	15.5	110	51	(2)
13	27	150	102	(4)
14	38	200	152	(6)
15	48.3	250	241	(9.5)
16	72.5	250	241	(9.5)
17		350	367	(14)
18	123	350	367	(14)
19		450	457	(18)
20		550	559	(22)
21	145	350	367	(14)
22		450	457	(18)
23		550	559	(22)
24		650	686	(27)
25	170	450	457	(18)
26		550	559	(22)
27		650	686	(27)
28		750	787	(31)
29	245	550	559	(22)
30		650	686	(27)
31		750	787	(31)
32		900	965	(38)
33		1050	1120	(44)
34	362	1050	1190	(47)
35		1300	1270	(50)
36	550	1550	1910	(75)
37		1800	2160	(85)
38	800	2050	2850	(112)

NOTE – These gap distances are not a requirement for grounding blades that operate in a plane perpendicular to the main switch base,

Copyright © 2003 IEEE All Rights Reserved

Copyright The Institute of Electrical and Electronics Engineers, Inc.
Provided by IHS under license with IEEE
No reproduction or networking permitted without license from IHS

Not for Resale

Table 16 – Preferred rated switching currents for interrupter switches[1]

Line Number	Rated maximum voltage kV rms (1)	Load and loop current amperes (2)	Unloaded transformer current amperes (3)	Line-charging current		Isolated capacitor bank current amperes[6] (6)	Cable-charging current amperes (7)
				Quick-break amperes[4] (4)	Interrupter amperes[5] (5)		
1	8.3	RCC [2]	Note 3	10	10	400	10
2	15.5	RCC [2]	Note 3	10	10	400	15
3	27	RCC [2]	Note 3	10	10	400	20
4	38	RCC[2]	Note 3	10	10	250	20
5	48.3	RCC[2]	10	10	10	250	50
6	72.5	RCC[2]	10	13	15	630	80
7	123	RCC[2]	10	10	35	315	90
8	145	RCC[2]	8	8	50	315	100
9	170	RCC[2]	8	7	75	400	100
10	245	RCC[2]	8	5	150	400	115
11	362	RCC[2]	5	-	350	-	-

NOTES –

1 Interrupter switches may have one or more specifically assigned switching ratings. Refer to Annex A for typical system values.

2 RCC = rated continuous current from tables 3, 9 or 13.

3 These switches are capable of switching unloaded transformers rated 2500 kVA or less provided the switches have demonstrated the ability to switch their rated load current. For larger transformers or switches not having load switching ratings, consult manufacturer.

4 These devices are typically high-velocity whips or rigid arm devices, having unconfined arcs with air as the dielectric medium and are usually inserted in the circuit during the opening process.

5 These devices are interrupters with gas, vacuum, or oil as the interrupting medium.

6 Values given are for station class switches. Preferred ratings for distribution class switches have not been established. Consult manufacturer.

Copyright © 2003 IEEE All Rights Reserved

Copyright The Institute of Electrical and Electronics Engineers, Inc.
Provided by IHS under license with IEEE
No reproduction or networking permitted without license from IHS

Not for Resale

Table 17 – Preferred rated control voltages and their ranges[1,2,3,10]

Rated voltage, volts	Voltage range, volts	
	Operating and auxiliary function[4]	Tripping function[5]
Direct current[6,7]		
12[8]	10-14	7-14
24[8]	20-28	14-28
48[8]	36-56	28-56
125	90-140	70-140
250	180-280	140-280
Single-phase alternating current (60 Hz)[9]		
120	104-127	-
240	204-254	-
480	416-508	-
Poly-phase alternating current (60 Hz)[9]		
208Y/120	180Y/104-220Y/127	-
240	208-254	-
480	416-508	-
480Y/277	416Y/240-508Y/292	-

NOTES –

I Electrically operated motors, contactors, solenoids, valves, and the like, need not carry a nameplate voltage rating that corresponds numerically to the rated voltage shown in table 17 as long as these components perform the intended duty cycle (usually intermittent) in the voltage range specified.

2 Relays, motors, or other auxiliary equipment that function as part of the control for a device shall be subject to the voltage limits imposed by this standard, whether mounted at the device or at a remote location.

3 Switchgear devices in some applications may be exposed to control voltages exceeding those specified here due to abnormal conditions such as abrupt changes in line loading. Such applications require specific study, and manufacturer should be consulted. Also, application of switchgear devices containing solid-state components exposed continuously to control voltages approaching the upper limits of ranges specified herein require specific attention, and the manufacturer should be consulted before an application is made.

4 Operating functions include (a) the opening and closing power mechanisms, and (b) the means (coils, contactors, seal-in relays, and the like) to actuate the power mechanisms. Auxiliary functions include all functions except operating and tripping.

5 Tripping is the release of the holding means that permits stored energy to open a device such as an interrupter switch or close a device such as a fault initiating switch.

6 It is recommended that the coils of operating, auxiliary, and tripping devices that are connected permanently to one direct-current potential should be connected to the negative control bus to minimize electrolytic deterioration.

7 Power-operated mechanisms utilizing 12 and 24 V self-contained direct-current control sources shall operate over the range of 85 percent to 115 percent of the rated voltage.

8 12, 24, or 48-volt tripping, operating, and auxiliary functions are recommended only when the device is located near the battery or where special effort is made in order to provide due consideration to battery location and cable size.

9 Includes heater circuits.

10 For 50 Hz application, consult manufacturer.

Copyright © 2003 IEEE All Rights Reserved

Copyright The Institute of Electrical and Electronics Engineers, Inc.
Provided by IHS under license with IEEE
No reproduction or networking permitted without license from IHS

Not for Resale

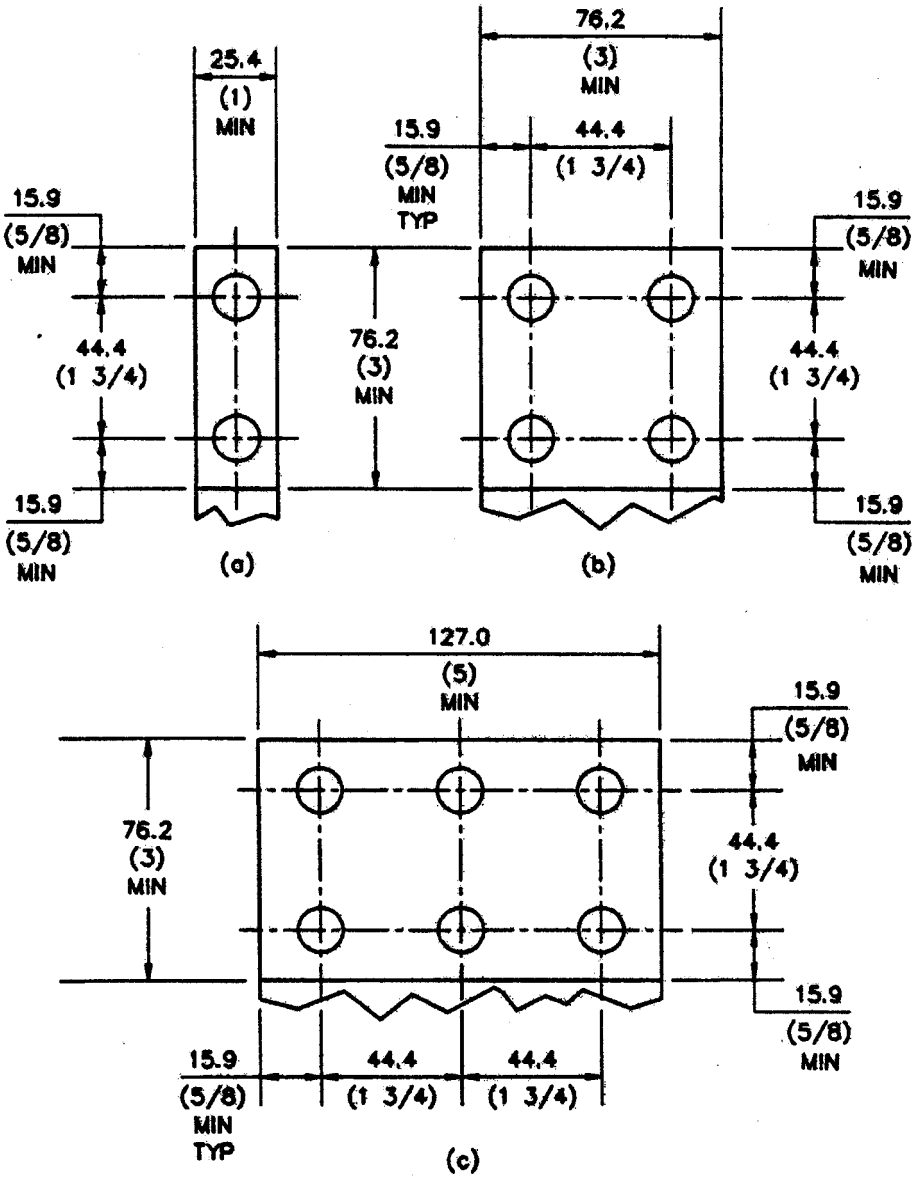

Figure 1 – Arrangement Of Bolt Holes In Terminal Pads

NOTES –
1 Two or more interleaved 4-hole pad configurations can be used as shown in figure 1(b).
2 All dimensions are in millimeters and (inches).
3 Holes shall accommodate bolts that are ½ inch (12mm) in diameter.

Copyright © 2003 IEEE All Rights Reserved

Copyright The Institute of Electrical and Electronics Engineers, Inc.
Provided by IHS under license with IEEE
No reproduction or networking permitted without license from IHS
Not for Resale

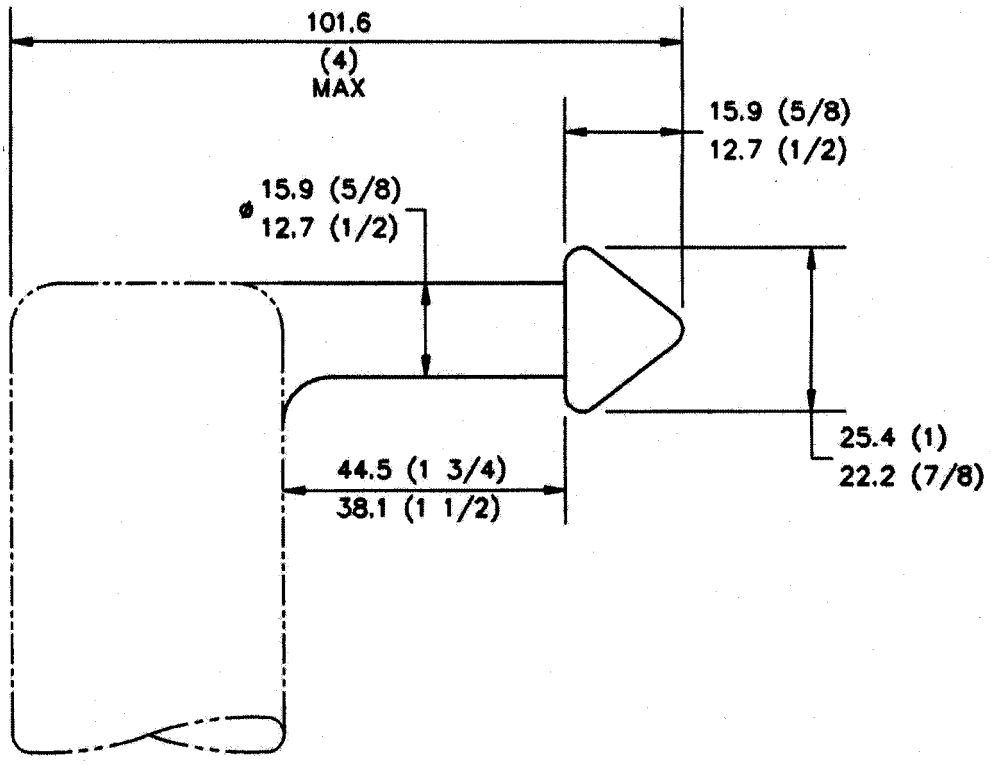

Figure 2–Outdoor air switch hook dimensions

NOTES –
1 All dimensions are in millimeters and (inches).
2 Dimensions that are not shown are optional.

Copyright © 2003 IEEE All Rights Reserved

Copyright The Institute of Electrical and Electronics Engineers, Inc.
Provided by IHS under license with IEEE
No reproduction or networking permitted without license from IHS
Not for Resale

Annex A
(informative)
Reference data

A.1 Peak withstand current replaces momentary current. Short-time withstand current replaces 3 second current. The ratio of the peak withstand current to short time (symmetrical) withstand current is 2.6 for 60 Hz and 2.5 for 50 Hz.

A.2 Typical system values for cable and line charging currents

Rated maximum voltage kV rms	Overhead line current A/mile	Typical line length miles	Line charging current amperes	Cable charging current A/mile
8.3	0.03	10	0.3	1.5
15.5	0.06	10	0.6	2.8
27	0.10	20	2.0	3.2
38	0.14	30	4.2	3.5
48.3	0.17	30	5.1	9.8
72.5	0.28	50	14.0	15.7
123	0.44	80	35.2	18.2
145	0.52	100	52.0	19.4
170	0.61	120	73.2	20.0
245	0.87	170	147.9	22.3
362	1.31	250	327.5	-

A.3 Short-time withstand current and electromagnetic force equations

A.3.1 Calculation of short-time withstand current limits

The following formulas may be used as guides for calculating short-time withstand current capability of uniform conductors based on thermal capacities assuming no heat loss during the time of current flow.

The formula for aluminum is written for conductivities between 40 to 65 percent of the International Annealed Copper Standard (IACS). The formula for copper is written for conductivities of 95 to 100 percent IACS.

$$I_{al} = 0.144 \times 10^6 \times A \sqrt{\left(\frac{1}{t} \log_{10} \frac{\theta_2 - 20 + (15150/G)}{\theta_1 - 20 + (15150/G)} \right)}$$

$$I_{cu} = 0.22 \times 10^6 \times A \sqrt{\left(\frac{1}{t} \log_{10} \frac{\theta_2 - 20 + (25400/G)}{\theta_1 - 20 + (25400/G)} \right)}$$

Where:
I_{al} = maximum rms amperes for aluminum conductor
I_{cu} = maximum rms amperes for copper conductor
A = cross-sectional area in square inches
t = the duration of constant current flow in seconds
θ_2 = the temperature limit (degrees Celsius)
θ_1 = is the starting temperature (degrees Celsius)
G = the conductivity in percent IACS

NOTES –

1 The temperature limit (θ_2) of materials may be determined by mechanical requirements since annealing of heat-treated or hard drawn material occurs in relatively shorter time as temperature is increased.
For current carrying parts when t = 3 seconds and I_{al} or I_{cu} = symmetrical rms amperes associated with the short-time withstand current ratings from table 3, 9 or 13, typical temperature values to minimize annealing are:

Copyright © 2003 IEEE All Rights Reserved

Copyright The Institute of Electrical and Electronics Engineers, Inc.
Provided by IHS under license with IEEE
No reproduction or networking permitted without license from IHS
Not for Resale

θ_2 = 250 ^{o}C for heat-treated aluminum alloy
θ_2 = 300 ^{o}C for hard-drawn copper

2 θ_1 should be no more than θ_{max} of C37.30.

3 Other materials available for current-carrying parts may have other values for θ_1 and θ_2. Such materials are acceptable provided it can be demonstrated that the switch meets the short time current requirements of C37.30 and C37.34.

A.3.2 Calculation of electromagnetic forces

The electromagnetic force exerted between two current-carrying conductors is a function of the current, its decrement rate, the shape and arrangement of conductors, and the natural frequencies of the complete assemblies, including mounting structure, insulators, and conductors.

Obviously, it is not feasible to cover every case with one simple equation, even if some approximations are made, because of the large number of variables involved including the wide range of constants for support structures.

The force calculated by the following equation is that produced by the maximum peak current. In most cases, the calculated force is higher than that which actually occurs due to inertia and flexibility of the systems, and this fact tends to compensate for the neglect of resonant forces. The equation, therefore, is sufficiently accurate for usual practical considerations.

$$F = M\left(\frac{5.4\times I^2}{S\times 10^7}\right)$$

F = force in pounds per foot on conductor
M = multiplying factor shown in following table
I = short-circuit current in amperes expressed in terms shown in table
S = spacing between center-lines of conductors in inches

Multiplying factor (M) for calculation of electromagnetic forces

Circuit	Amperes (I) expressed as:	Multiplying factor (M)
dc	maximum peak	1.0
ac, 3-phase	maximum peak	0.866
ac, 3-phase	rms asymmetrical	$(0.866 \times 1.63^2) = 2.3$
ac, 3-phase	rms symmetrical	$(0.866 \times 2.82^2) = 6.9$
1 phase of 3-phase or 1 -phase	maximum peak	1.0
1 phase of 3-phase or 1 -phase	rms asymmetrical	$(1.63^2) = 2.66$
1 phase of 3-phase or 1 -phase	rms symmetrical	$(2.82^2) = 8.0$

Copyright © 2003 IEEE All Rights Reserved

Copyright The Institute of Electrical and Electronics Engineers, Inc.
Provided by IHS under license with IEEE
No reproduction or networking permitted without license from IHS
Not for Resale

Annex B
(Informative)
Historical Data

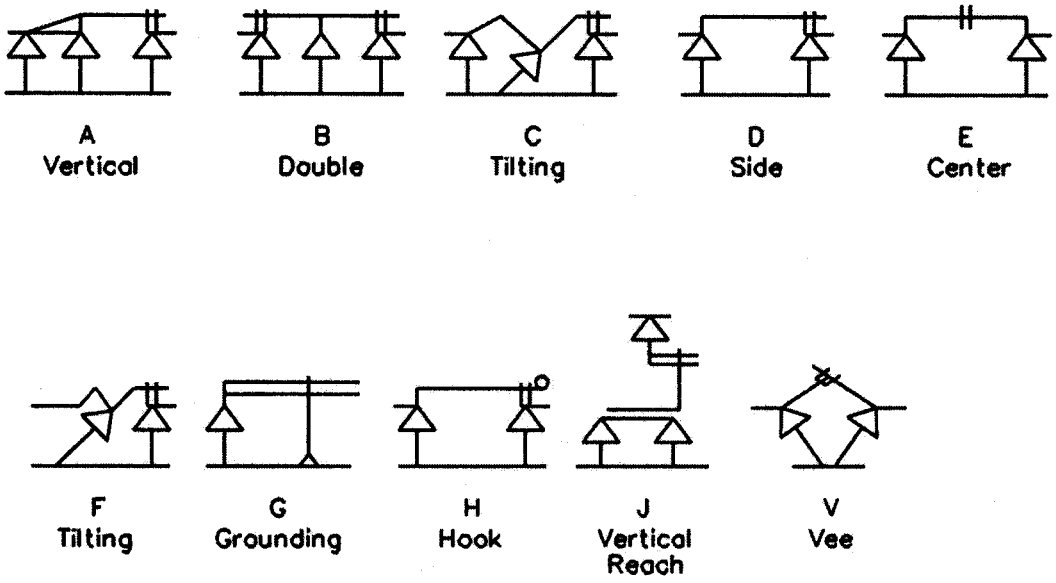

Figure B1—Typical construction classification of station class outdoor air disconnect switches

Copyright © 2003 IEEE All Rights Reserved

Copyright The Institute of Electrical and Electronics Engineers, Inc.
Provided by IHS under license with IEEE
No reproduction or networking permitted without license from IHS

Not for Resale

Annex C
(Informative)
Bibliography

ANSI C2-1999	*National Electrical Safety Code*
AIEE Committee Report	*A Guide for Minimum Electrical Clearances for Standard Basic Insulation Levels.* Part III (PAS) Vol. 73, June 1954.
IEEE Substation Committee	*Safety Aspects in Substation Voltage Uprating* by Substation Committee Working Group E1: Recommended minimum clearances in substations, IEEE Transactions on Power Delivery, July 1992, Vol. 7, No. 3, pp. 1250-1255.

Copyright © 2003 IEEE All Rights Reserved

Copyright The Institute of Electrical and Electronics Engineers, Inc.
Provided by IHS under license with IEEE
No reproduction or networking permitted without license from IHS

Not for Resale