

IEEE Standard for Control Switchboards

C37.21™

IEEE Power Engineering Society

Sponsored by the
Switchgear Committee

IEEE
3 Park Avenue
New York, NY 10016-5997, USA

1 December 2005

IEEE Std C37.21™-2005
(Revision of
IEEE Std C37.21-1985)

--`,,```,,,,````-`-`,,`,,`,`,,`---

Copyright The Institute of Electrical and Electronics Engineers, Inc.
Provided by IHS under license with IEEE
No reproduction or networking permitted without license from IHS

Not for Resale

and Electronics Engineers, Inc.
IEEE
nitted without license from IHS
Not for Resale

IEEE Std C37.21™-2005
(Revision of
IEEE Std C37.21-1985)

IEEE Standard for Control Switchboards

Sponsor

Switchgear Committee
of the
IEEE Power Engineering Society

Approved 9 June 2005

IEEE-SA Standards Board

Copyright The Institute of Electrical and Electronics Engineers, Inc.
Provided by IHS under license with IEEE
No reproduction or networking permitted without license from IHS

Not for Resale

Abstract: This standard covers ratings, construction, and testing of dead-front control switchboards containing, but not limited to, devices such as switches, control devices, instrumentation, metering, monitoring, alarms, annunciators, protective and auxiliary relays, and regulating devices and accessories. It includes, but is not specifically limited to, switchboards for the control and protection of apparatus used for or associated with power generation, conversion, transmission, and distribution. Types of switchboards may include control, vertical, dead-front, enclosed, dual, or duplex switchboards. Other construction types include control desks, consoles, benchboards, dual or duplex benchboards, fixed rack, cabinet, and swing rack cabinets. It does not apply to industrial controls, communication equipment, switchboards for use on board ships, or Class 1E switchboards for use in nuclear generating stations.
Keywords: benchboard, console, control desk, control switchboard, dead-front switchboard, dual benchboard, dual or duplex benchboard, duplex benchboard, enclosed switchboard, fixed rack cabinet, swing rack cabinet, vertical switchboard

The Institute of Electrical and Electronics Engineers, Inc.
3 Park Avenue, New York, NY 10016-5997, USA

Copyright © 2005 by the Institute of Electrical and Electronics Engineers, Inc.
All rights reserved. Published 1 December 2005. Printed in the United States of America.

IEEE is a registered trademark in the U.S. Patent & Trademark Office, owned by the Institute of Electrical and Electronics Engineers, Incorporated.

National Electrical Code and NEC are registered trademarks in the U.S. Patent & Trademark Office, owned by The Institute of Electrical and Electronics Engineers, Incorporated.

National Electrical Safety Code and NESC are registered trademarks in the U.S. Patent & Trademark Office, owned by The Institute of Electrical and Electronics Engineers, Incorporated.

Print: ISBN 0-7381-4750-8 SH95353
PDF: ISBN 0-7381-4751-6 SS95353

No part of this publication may be reproduced in any form, in an electronic retrieval system or otherwise, without the prior written permission of the publisher.

Copyright The Institute of Electrical and Electronics Engineers, Inc.
Provided by IHS under license with IEEE
No reproduction or networking permitted without license from IHS Not for Resale

IEEE Standards documents are developed within the IEEE Societies and the Standards Coordinating Committees of the IEEE Standards Association (IEEE-SA) Standards Board. The IEEE develops its standards through a consensus development process, approved by the American National Standards Institute, which brings together volunteers representing varied viewpoints and interests to achieve the final product. Volunteers are not necessarily members of the Institute and serve without compensation. While the IEEE administers the process and establishes rules to promote fairness in the consensus development process, the IEEE does not independently evaluate, test, or verify the accuracy of any of the information contained in its standards.

Use of an IEEE Standard is wholly voluntary. The IEEE disclaims liability for any personal injury, property or other damage, of any nature whatsoever, whether special, indirect, consequential, or compensatory, directly or indirectly resulting from the publication, use of, or reliance upon this, or any other IEEE Standard document.

The IEEE does not warrant or represent the accuracy or content of the material contained herein, and expressly disclaims any express or implied warranty, including any implied warranty of merchantability or fitness for a specific purpose, or that the use of the material contained herein is free from patent infringement. IEEE Standards documents are supplied "**AS IS**."

The existence of an IEEE Standard does not imply that there are no other ways to produce, test, measure, purchase, market, or provide other goods and services related to the scope of the IEEE Standard. Furthermore, the viewpoint expressed at the time a standard is approved and issued is subject to change brought about through developments in the state of the art and comments received from users of the standard. Every IEEE Standard is subjected to review at least every five years for revision or reaffirmation. When a document is more than five years old and has not been reaffirmed, it is reasonable to conclude that its contents, although still of some value, do not wholly reflect the present state of the art. Users are cautioned to check to determine that they have the latest edition of any IEEE Standard.

In publishing and making this document available, the IEEE is not suggesting or rendering professional or other services for, or on behalf of, any person or entity. Nor is the IEEE undertaking to perform any duty owed by any other person or entity to another. Any person utilizing this, and any other IEEE Standards document, should rely upon the advice of a competent professional in determining the exercise of reasonable care in any given circumstances.

Interpretations: Occasionally questions may arise regarding the meaning of portions of standards as they relate to specific applications. When the need for interpretations is brought to the attention of IEEE, the Institute will initiate action to prepare appropriate responses. Since IEEE Standards represent a consensus of concerned interests, it is important to ensure that any interpretation has also received the concurrence of a balance of interests. For this reason, IEEE and the members of its societies and Standards Coordinating Committees are not able to provide an instant response to interpretation requests except in those cases where the matter has previously received formal consideration. At lectures, symposia, seminars, or educational courses, an individual presenting information on IEEE standards shall make it clear that his or her views should be considered the personal views of that individual rather than the formal position, explanation, or interpretation of the IEEE.

Comments for revision of IEEE Standards are welcome from any interested party, regardless of membership affiliation with IEEE. Suggestions for changes in documents should be in the form of a proposed change of text, together with appropriate supporting comments. Comments on standards and requests for interpretations should be addressed to:

Secretary, IEEE-SA Standards Board

445 Hoes Lane

Piscataway, NJ 08854

USA

NOTE—Attention is called to the possibility that implementation of this standard may require use of subject matter covered by patent rights. By publication of this standard, no position is taken with respect to the existence or validity of any patent rights in connection therewith. The IEEE shall not be responsible for identifying patents for which a license may be required by an IEEE standard or for conducting inquiries into the legal validity or scope of those patents that are brought to its attention.

Authorization to photocopy portions of any individual standard for internal or personal use is granted by the Institute of Electrical and Electronics Engineers, Inc., provided that the appropriate fee is paid to Copyright Clearance Center. To arrange for payment of licensing fee, please contact Copyright Clearance Center, Customer Service, 222 Rosewood Drive, Danvers, MA 01923 USA; +1 978 750 8400. Permission to photocopy portions of any individual standard for educational classroom use can also be obtained through the Copyright Clearance Center.

Copyright The Institute of Electrical and Electronics Engineers, Inc.
Provided by IHS under license with IEEE
No reproduction or networking permitted without license from IHS Not for Resale

Introduction

This introduction is not part of IEEE Std C37.21-2005, IEEE Standard for Control Switchboards.

This standard has been revised to reflect changes that have been suggested since the 1985 revision of IEEE Std C37.21. The revisions in this revision include the following:

- Modification of the use of units to conform to the latest IEEE-SA policy on metrification
- Removal of current ratings for control switchboards
- Clarification of requirements for production tests
- Clarification of voltage and current limits for instruments and control circuits
- Clarification of voltage circuit protection
- Clarification of altitude correction factors
- Expansion of nameplate requirements to include control switchboard ratings

This standard includes only the requirements for control switchboards (also called *control boards*). These requirements were originally a part of IEEE Std C37.20-1969. Other types of equipment originally included in IEEE Std C37.20-1969 are now incorporated in separate standards.

IEEE Std C37.20-1969 for many years covered all switchgear assemblies including metal-enclosed bus and control switchboards. Standards committees of IEEE Switchgear Assemblies Subcommittee and NEMA Power Switchgear Assemblies Technical Committee recommended that the document be further developed and, where appropriate, the various subclauses be identified with their own standards.

The Switchgear Assemblies Subcommittee of the Switchgear Committee of the IEEE Power Engineering Society was responsible for this revision.

This publication is one of a series covering switchgear assemblies as follows:

- IEEE Std C37.20.1™, Standard for Metal-Enclosed Low-Voltage Power Circuit Breaker Switchgear
- IEEE Std C37.20.2™, IEEE Standard for Metal-Clad Switchgear
- IEEE Std C37.20.3™, IEEE Standard for Metal-Enclosed Interrupter Switchgear
- IEEE Std C37.20.7™, IEEE Guide for Testing Medium-Voltage Metal-Enclosed Switchgear for Internal Arcing Faults
- IEEE Std C37.21™, IEEE Standard for Control Switchboards
- IEEE Std C37.23™, IEEE Standard for Metal-Enclosed Bus
- IEEE StdC37.20.4™, IEEE Standard for Indoor AC Switches (1 kV – 38 kV) for Use in Metal-Enclosed Switchgear
- IEEE Std C37.20.6™, IEEE Standard for 4.76 kV to 38 kV Rated Grounding and Testing Devices Used in Enclosures
- IEEE Std C37.24™, IEEE Guide for Evaluating the Effect of Solar Radiation on Outdoor Metal-Enclosed Switchgear

--`,,```,,,,````-`-`,,`,,`,`,,`---
Copyright © 2005 IEEE. All rights reserved.
Copyright The Institute of Electrical and Electronics Engineers, Inc.
Provided by IHS under license with IEEE
No reproduction or networking permitted without license from IHS
Not for Resale

The following diagram depicts types of switchgear assemblies:

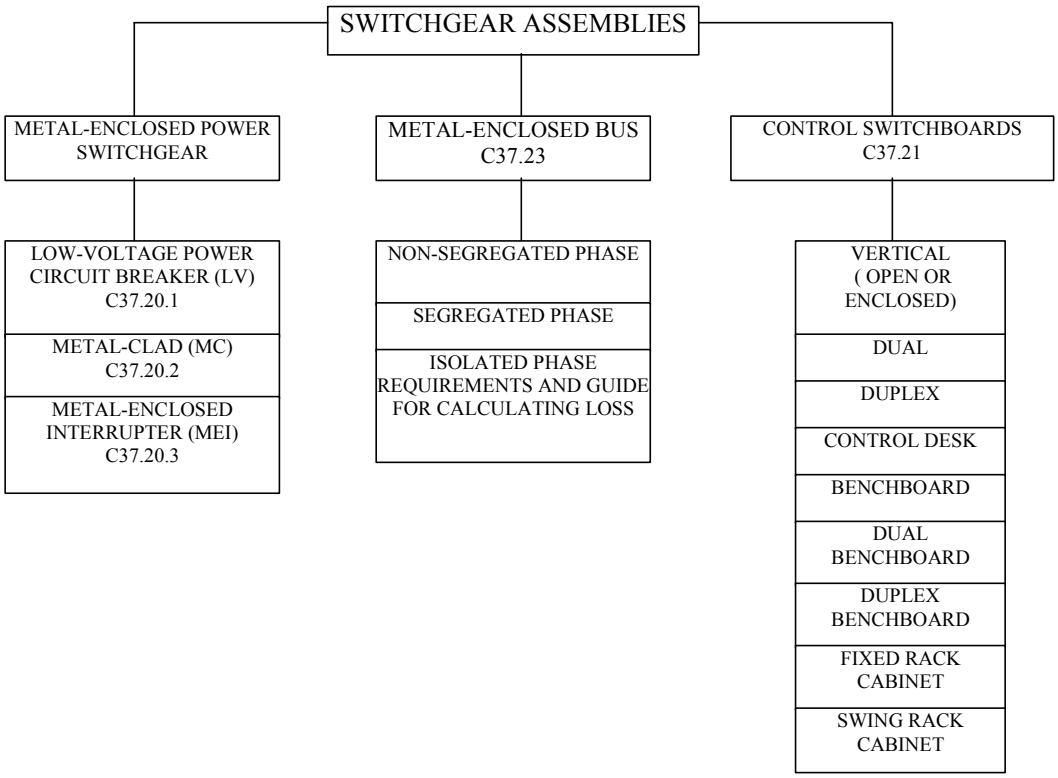

Figure A—Types of switchgear assemblies

Notice to users

Errata

Errata, if any, for this and all other standards can be accessed at the following URL: http://standards.ieee.org/reading/ieee/updates/errata/index.html. Users are encouraged to check this URL for errata periodically.

Interpretations

Current interpretations can be accessed at the following URL: http://standards.ieee.org/reading/ieee/interp/index.html.

Patents

Attention is called to the possibility that implementation of this application guide may require use of subject matter covered by patent rights. By publication of this application guide, no position is taken with respect to the existence or validity of any patent rights in connection therewith. The IEEE shall not be responsible for identifying patents or patent applications for which a license may be required to implement an IEEE standard or for conducting inquiries into the legal validity or scope of those patents that are brought to its attention.

Copyright © 2005 IEEE. All rights reserved.

Copyright The Institute of Electrical and Electronics Engineers, Inc.
Provided by IHS under license with IEEE
No reproduction or networking permitted without license from IHS
Not for Resale

Participants

This revision is dedicated to our friend and colleague Shaun Slattery who passed away during its preparation.

The following is a list of the participants in the C37.21 Working Group of the Switchgear Assemblies Subcommittee of the Switchgear Committee of the IEEE Power Engineering Society:

Doug Edwards, *Chair*

S. (Dave) Gohil	George Nourse	Shaun Slattery
Anne Morgan	Ted W. Olsen	Mike Wactor

The following members of the individual balloting committee voted on this application guide. Balloters may have voted for approval, disapproval, or abstention.

Paul D. Barnhart
Stan Billings
Wallace Binder
Thomas Blair
Dave Burns
Ted Burse
Eldridge Byron
Tommy Cooper
R. Daubert
Byron Davenport
Matthew Davis
Donald Dunn
Pete Dwyer
Doug Edwards
Amir El-Sheikh
Gary Engmann
Frank Gerleve
Kenneth Gettman
S. (Dave) Gohil
George Gregory
Randall Groves
Kenneth Hanus
Edward Horgan, Jr.
William Hurst
David Jackson
Richard Jackson
Jerry Jerabek
Thomas LaRose
Stephen R. Lambert
Ward E. Laubach
David Lemmerman
Jason Lin
R. W. Long
Gregory Luri
Frank Mayle
Deepak Mazumdar
Nigel McQuin
G. Michel
Georges Montillet
Anne Morgan
Allan Morse
Dan Neeser
Jeffrey Nelson
Paul J. Notarian
George Nourse
Ted W. Olsen
Miklos Orosz
Paulette Payne
Ed Peters
Robert J. Puckett
Michael A. Roberts
Hugh Ross
James Ruggieri
Gerald Sakats
David Schempp
Robert Seitz
Devki Sharma
Ned Simon
James Smith
Allan St. Peter
Stan Telander
Malcolm Thaden
Jane Ann Verner
Mike Wactor
James Wilson

Copyright © 2005 IEEE. All rights reserved.

Copyright The Institute of Electrical and Electronics Engineers, Inc.
Provided by IHS under license with IEEE
No reproduction or networking permitted without license from IHS
Not for Resale

When the IEEE-SA Standards Board approved this application guide on 9 June 2005, it had the following membership:

Steve M. Mills, *Chair*
Richard H. Hulett, *Vice Chair*
Judith Gorman, *Secretary*

Mark D. Bowman
Dennis B. Brophy
Joseph Bruder
Richard Cox
Bob Davis
Julian Forster*
Joanna N. Guenin
Mark S. Halpin
Raymond Hapeman
William B. Hopf
Lowell G. Johnson
Herman Koch
Joseph L. Koepfinger*
David J. Law
Daleep C. Mohla
Paul Nikolich
T. W. Olsen
Glenn Parsons
Ronald C. Petersen
Gary S. Robinson
Frank Stone
Malcolm V. Thaden
Richard L. Townsend
Joe D. Watson
Howard L. Wolfman

*Member Emeritus

Also included are the following nonvoting IEEE-SA Standards Board liaisons:

Satish K. Aggarwal, *NRC Representative*
Richard DeBlasio, *DOE Representative*
Alan H. Cookson, *NIST Representative*

Don Messina
IEEE Standards Project Editor

Copyright © 2005 IEEE. All rights reserved.

Copyright The Institute of Electrical and Electronics Engineers, Inc.
Provided by IHS under license with IEEE
No reproduction or networking permitted without license from IHS
Not for Resale

CONTENTS

1. Overview 1

2. Normative references 1

3. Definitions 2

4. Service conditions 5

4.1 Usual service conditions 5

5. Ratings 5

5.1 Voltage and power frequency ratings 5
5.2 Temperature limitations for air surrounding devices within an enclosed switchboard 6

6. Tests 6

6.1 General 6
6.2 Design tests 6
6.3 Production tests 8
6.4 Field dielectric test 9

7. Construction 10

7.1 General requirements 10
7.2 Materials and finish 15
7.3 Indoor switchboards 16
7.4 Outdoor switchboards 16

8. General application guide 17

8.1 Unusual service conditions 17
8.2 Nuclear power plant application 19

9. Handling, storage, and installation guide 20

9.1 General 20
9.2 Handling 20
9.3 Pre-operation check 21

Annex A (informative) Bibliography 23

Copyright © 2005 IEEE. All rights reserved.

Copyright The Institute of Electrical and Electronics Engineers, Inc.
Provided by IHS under license with IEEE
No reproduction or networking permitted without license from IHS
Not for Resale

IEEE Standard for Control Switchboards

1. Overview

This standard covers ratings, construction, and testing of dead-front control switchboards containing, but not limited to, devices such as switches, control devices, instrumentation, metering, monitoring, protective and auxiliary relays, and regulating devices and accessories.

It includes, but is not specifically limited to, switchboards for the control and protection of apparatus used for or associated with power generation, conversion, transmission, and distribution.

It does not apply to industrial controls, communication equipment, switchboards for use onboard ships, or Class 1E switchboards for use in nuclear generating stations, nor does it address human factor considerations.

2. Normative references

The following referenced documents are indispensable for the application of this standard. For dated references, only the edition cited applies. For undated references, the latest edition of the referenced document (including any amendments or corrigenda) applies.

Accredited Standards Committee C2, National Electrical Safety Code® (NESC®).[1]

ASTM B 117, Standard Practice for Operating Salt Spray (Fog) Appartus.[2]

ASTM D 229, Standard Test Method for Rigid Sheet and Plate Materials Used for Electrical Insulation.

ASTM D 714, Standard Test Method for Evaluating Degree of Blistering of Paints.

ASTM D 1535, Standard Practice for Specifying Color by the Munsell System.

ASTM D 1654, Standard Test Method for Evaluation of Painted of Coated Specimens Subjected to Corrosive Environments.

[1] The NESC is available from the Institute of Electrical and Electronic Engineers, 445 Hoes Lane, Piscataway, NJ 08854, USA (http://standards/ieee.org/).
[2] ASTM publications are available from American Society of Testing and Materials, 100 Barr Harbor Drive, West Conshohocken, PA 19428-2959, USA (http://www.astm.org/).

Copyright © 2005 IEEE. All rights reserved.

Copyright The Institute of Electrical and Electronics Engineers, Inc.
Provided by IHS under license with IEEE
No reproduction or networking permitted without license from IHS
Not for Resale

IEEE Std C37.2™, IEEE Standard Electrical Power System Device Function Numbers and Contact Designations. [3, 4]

IEEE Std C37.24™, IEEE Guide for Evaluating the Effect of Solar Radiation on Outdoor Metal-Enclosed Switchgear.

IEEE Std C37.81™, IEEE Guide for Seismic Qualification of Class 1E Metal-Enclosed Power Switchgear Assemblies.

IEEE Std C37.90™, IEEE Standard for Relays and Relay Systems Associated with Electric Power Apparatus.

IEEE Std C37.90.1™, IEEE Standard Surge Withstand Capability (SWC) Tests for Relays and Relay Systems Associated with Electric Power Apparatus.

IEEE Std C37.100™, IEEE Standard Definitions for Power Switchgear.

NEMA WC70/ICEA S-95-658, Nonshielded Power Cables Rated 2000 Volts or Less.[5]

NFPA 70, National Electrical Code® (NEC®).[6]

UL 486A, Wire Connectors and Soldering Lugs for Use with Copper Conductors.[7]

3. Definitions

The definitions of terms contained in this standard, or in other standards referred to in this standard, are not intended to embrace all legitimate meanings of the terms. They are applicable only to the subject treated in this standard.

If a term is not defined in this standard, the definition in IEEE Std C37.100[8] applies. An asterisk (*) following a definition indicates that the definition in this standard is not contained in IEEE Std C37.100 while a dagger (†) indicates the definition differs from that in IEEE Std C37.100.

Type of switchboards

Switchboards may be freestanding or mounted on equipment or wall. Typical switchboard types are shown in Figure 1.

[3] IEEE publications are available from the Institute of Electrical and Electronic Engineers, Service Center, 445 Hoes Lane, Piscataway, NJ 08854, USA (http://www.standards.ieee.org/).
[4] The IEEE standards or products referred to in this clause are trademarks of the Institute of Electrical and Electronic Engineers, Inc.
[5] NEMA publications are available from Global Engineering Documents, 15 Inverness Way East, Englewood, CO 80112, USA (http://www.global.ihs.com/).
[6] The NEC is published by the National Fire Protection Association, Batterymarch Park, Quincy, MA 02269, USA (http://www.nfpa.org/). Copies are also available from the Institute of Electrical and Electronics Engineers, 445 Hoes Lane, P.O. Box 1331, Piscataway, NJ 08855-1331, USA (http://standards.ieee.org/).
[7] UL publications are available from Global Engineering Documents, 15 Inverness Way East, Englewood, CO 80112, USA (http://www.global.ihs.com/).
[8] For information about documents referenced in this standard, see Clause 2.

Copyright © 2005 IEEE. All rights reserved.

Copyright The Institute of Electrical and Electronics Engineers, Inc.
Provided by IHS under license with IEEE
No reproduction or networking permitted without license from IHS
Not for Resale

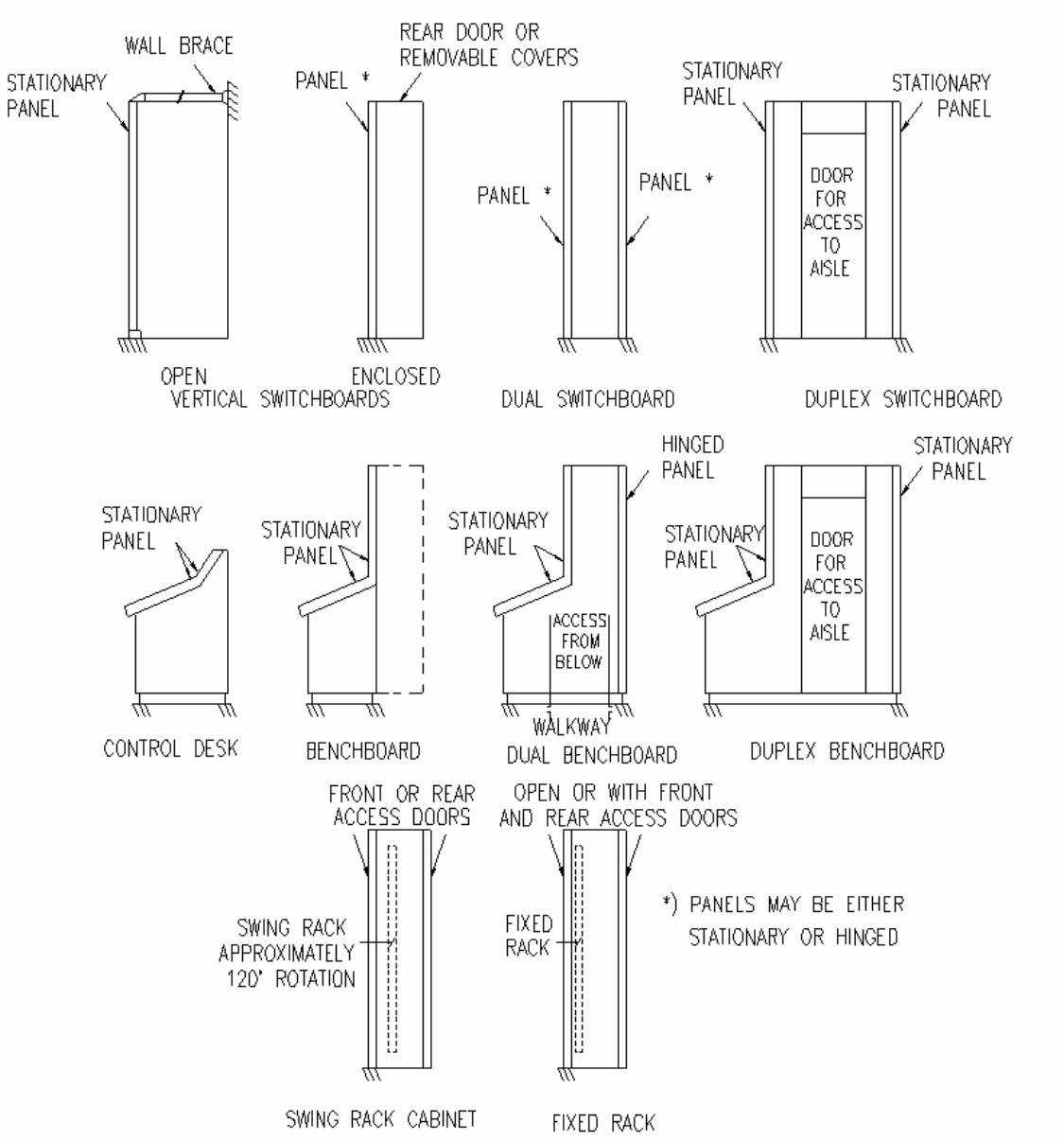

Figure 1—Typical switchboards (side views)

3.1 benchboard: A combination of a control desk and a vertical switchboard in a common assembly. † *See also:* **dual benchboard**; **duplex benchboard**.

3.2 control desk (console): A control switchboard consisting of one or more relatively short horizontal or inclined panels mounted on an assembly of such a height that the panel-mounted devices are within convenient reach of an attendant. †

3.3 control switchboard: A type of switchboard including control, instrumentation, metering, protective (relays), or regulating equipment for remotely controlling other equipment. Control switchboards do not include the primary power-switching devices or their connections.*

Copyright © 2005 IEEE. All rights reserved.

Copyright The Institute of Electrical and Electronics Engineers, Inc.
Provided by IHS under license with IEEE
No reproduction or networking permitted without license from IHS
Not for Resale

3.4 dual benchboard: A combination assembly of a benchboard and a vertical hinged panel switchboard placed back to back (no aisle) and enclosed with a top and ends.* *See also:* **benchboard; duplex benchboard.**

3.5 dual switchboard: A control switchboard with front and rear panels separated by a comparatively short distance (no aisle) and enclosed at both ends and top. The panels on at least one side are hinged for access to the panel wiring. † *See also:* **duplex switchboard.**

3.6 duplex benchboard: A combination assembly of a benchboard and vertical switchboard placed back-to-back and enclosed with a top and ends (not grille). Access space (aisle) with entry doors is provided between the benchboard and vertical switchboard. † *See also:* **benchboard; dual benchboard.**

3.7 duplex switchboard: A control switchboard consisting of panels placed back-to-back and enclosed with a top and ends (not grille). Access space (aisle) with entry doors is provided between the rows of panels. † *See also:* **dual switchboard.**

3.8 fixed rack (cabinet): An assembly enclosed at the top and sides, either open or with door(s) for access, with a top-to-bottom front panel opening for equipment mounting (for example, 486 mm (19 in) wide chassis and subpanel assemblies).† *See also:* **swing rack cabinet.**

3.9 swing rack cabinet: An assembly enclosed at the top, sides, and rear with front hinged door for front access having a swing open frame for equipment mounting (for example, 486 mm (19 in) wide chassis in subpanel assemblies). † *See also:* **fixed rack (cabinet).**

3.10 vertical enclosed switchboard: A dead-front switchboard that has an overall sheet metal enclosure (not grille) covering back, top, and ends of the entire assembly. † *See also:* **vertical open switchboard; vertical switchboard.**

NOTE—Access to the interior of the enclosure is usually provided by doors or removable covers. [9]

3.11 vertical open switchboard: A dead-front switchboard that has stationary panels and supporting members as required. † *See also:* vertical enclosed switchboard; vertical switchboard.

3.12 vertical switchboard: A control switchboard composed only of vertical panels.* *See also:* **vertical enclosed switchboard**; **vertical open switchboard**.

NOTE—This type of switchboard may be enclosed or have an open back.

Common or related terms

Qualifying terms are defined in *The Authoritative Dictionary of IEEE Standards*, Seventh Edition [B4][10] and IEEE Std C37.100, and the user is referred to the definitions given in those publications.

3.13 ambient air temperature: The temperature of the surrounding air that comes in contact with equipment.*

NOTE—Ambient air temperature, as applied to enclosed switchboards, is the average temperature of the surrounding air that comes in contact with the enclosure.*

[9] Notes in text, tables, and figures of a standard are given for information only and do not contain requirements needed to implement this standard.
[10] Numbers in brackets correspond to the numbers on references in the bibliography in Annex A.

Copyright © 2005 IEEE. All rights reserved.

Copyright The Institute of Electrical and Electronics Engineers, Inc.
Provided by IHS under license with IEEE
No reproduction or networking permitted without license from IHS
Not for Resale

3.14 design test: A test made by the manufacturer to determine the adequacy of the design of a particular type, style, or model of equipment or its component parts to meet its assigned ratings and to operate satisfactorily under normal service conditions or under special conditions if specified. Such tests may be used to demonstrate compliance with applicable standards of the industry. †

NOTE 1—Design tests are made on representative apparatus or prototypes to verify the validity of design analysis and calculation methods and to substantiate the ratings assigned to other apparatus of basically the same design. These tests are not intended to be made on every design or to be used as part of normal production. The applicable portion of these design tests may also be used to evaluate modifications of a previous design and to assure that performance has not been adversely affected. Test data from previous similar designs may also be used for current designs, where appropriate. Once made, the tests need not be repeated unless the design is changed to modify performance.

NOTE 2—*Design* tests are sometimes called *type* tests.

3.15 field test: A test made after the switchboard has been installed at its place of utilization. †

3.16 production test: A test made by the manufacturer on every device, or representative samples, or on parts or materials as required to demonstrate during production that the products meet the design specifications and applicable standards. †

NOTE 1—Certain quality assurance tests on identified critical parts of repetitive high-production devices may be performed on a planned statistical sampling basis.

NOTE 2—*Production* tests are sometimes called *routine* tests.

4. Service conditions

4.1 Usual service conditions

Switchboards conforming to this standard shall be suitable for operation under the following usual service conditions:

a) The temperature of the cooling air (ambient air temperature) surrounding the enclosure of the switchboard is within the limits of –20 °C to +40 °C.

b) The altitude shall not exceed 1500 m.

c) The effect of solar radiation is not significant. (The principles stated in IEEE Std C37.24 may be used for guidance.)

d) None of the unusual service conditions in 8.1 prevail.

5. Ratings

5.1 Voltage and power frequency ratings

Voltage and power frequency ratings for switchboards are listed in Table 1.

Copyright © 2005 IEEE. All rights reserved.

Copyright The Institute of Electrical and Electronics Engineers, Inc.
Provided by IHS under license with IEEE
No reproduction or networking permitted without license from IHS
Not for Resale

Table 1—Rated control voltages and power frequency

Line no.	Rated control voltage	Voltage ranges: lower limit–upper limit of voltage	Rated frequency [Hz]
	[Col 1]	[Col 2]	[Col 3]
1	24 V	18–28	dc
2	48 V	38–56	dc
3	125 V	100–140	dc
4	250 V	200–280	dc
5	125 V rms	104–127	25, 50, 60
6	240 V rms	208–254	25, 50, 60

The preferred ratings of control voltages and frequencies listed in Table 1 are not considered to be restrictive.

5.2 Temperature limitations for air surrounding devices within an enclosed switchboard

The temperature of the air surrounding all devices within an enclosed switchboard, considered in conjunction with their rating and loading as used, shall not cause these devices to operate outside their rated temperature range when the enclosure of the switchboard is surrounded by air within an ambient temperature range of –20 °C to +40 °C.

6. Tests

6.1 General

This clause establishes physical and electrical conditions for tests. No statement in this clause is to be construed as modifying the test requirements for devices included in the switchboard assemblies. Tests are classified as design tests, production tests, and field tests, as defined in Common or related terms (3.13 through 3.16).

6.2 Design tests

Design tests as applicable shall be made in accordance with 6.2.1 through 6.2.5.

6.2.1 Surge withstand capability (SWC) test

The SWC test is a standard design test of a relay system and in particular a static relay system. The intent of the SWC test is to prove that a given relay system will not misoperate or be damaged when subjected to high-voltage transients.

The components, which make up a static relay system, will vary depending on system design requirements. Therefore, the user and manufacturer shall determine what constitutes the relay system to be tested. For details of the test recommended, see IEEE Std C37.90.1.

Copyright © 2005 IEEE. All rights reserved.

Copyright The Institute of Electrical and Electronics Engineers, Inc.
Provided by IHS under license with IEEE
No reproduction or networking permitted without license from IHS
Not for Resale

6.2.2 Rain test for outdoor control switchboard

The enclosure to be tested shall be equipped and complete with typical appurtenances and placed in the area to be supplied with artificial precipitation. For multiple unit construction, a minimum of two units shall be used to test the joints between units. A roof joint shall be included.

The artificial precipitation shall be supplied by a sufficient number of nozzles to produce a uniform spray over the entire surface or surfaces under test. The various vertical surfaces of an enclosure may be tested separately or collectively, provided that a uniform spray is simultaneously applied to both item a) and item b), as follows:

a) The roof surfaces, from nozzles located at a suitable height.

b) The floor outside the enclosure for a distance of approximately 0.9 m in front of the surface under test with the enclosure located at floor level.

The nozzles used for this test shall deliver a square-shaped spray pattern with uniform spray distribution and shall have a capacity of at least 0.45 L/s at 410 kPa pressure and a spray angle of approximately 75°. The centerline of the nozzles shall be inclined downward so that the top of the spray is horizontal as it is directed toward the vertical and roof surfaces being tested.

The pressure at the nozzles shall be a minimum of 410 kPa under flow conditions. This pressure is approximately equivalent to rain driven by a 105 km/h wind. The quantity of water applied to each surface under test shall be at least 0.5 cm per unit surface per minute, and each surface so tested shall receive this rate of artificial precipitation for a duration of 5 min. The spray nozzle shall not be more than 3 m from the nearest vertical surface under test.

After the test is completed, an inspection shall be made promptly to determine whether the enclosure meets the requirements of outdoor construction. More specifically, the equipment shall have satisfactorily met the requirements of this test if the visible inspection indicates all of the following:

— No water on insulation.

— No water on any electrical components or mechanisms of the assembly.

— No significant accumulation of water retained by the structure or other noninsulating parts (to minimize corrosion).

6.2.3 Flame resistance test

Sheet, molded, or cast insulating material used in a switchboard shall have a minimum average ignition time of 60 s and a maximum average burning time of 100 s when tested in accordance with Method II of ASTM D229.

6.2.4 Rod entry test

6.2.4.1 Ventilated enclosures

This test shall be made by attempting to insert a straight rod having diameter of 12.7 mm, except that, if the distance between the openings and the nearest live part is greater than 10 cm, the opening may permit the entry of a straight rod having a diameter greater than 12.7 mm, but does not permit the entry of a straight rod having a diameter greater than 19.0 mm.

The enclosure is considered to have met the requirements of this test if the appropriate rod has not entered the enclosure or is restricted by a barrier from intrusion into the enclosure interior.

Copyright © 2005 IEEE. All rights reserved.

Copyright The Institute of Electrical and Electronics Engineers, Inc.
Provided by IHS under license with IEEE
No reproduction or networking permitted without license from IHS
Not for Resale

6.2.5 Coating (paint) qualification test

The coating qualification test applies to all switchboards incorporating external ferrous parts. Nonferrous switchboards with no external ferrous parts need not be tested.

The coating qualification test shall be performed to ensure the adequacy of finishes to inhibit the buildup of rust on ferrous metal materials used for switchboards.

6.2.5.1 Test specimens

Representative test panels of a 7.5 cm × 15 cm minimum size that can be accommodated by the test chamber shall be provided. Each specimen shall be uniformly processed in the standard production paint finishing system. At least four panels shall be selected for the test. The test specimens shall be of standard-gauge ferrous metal equivalent to that used for the enclosure. The specimens shall be allowed to age for a minimum of 7 days before being tested.

6.2.5.2 Test apparatus

The test apparatus shall consist of a fog chamber, salt solution reservoir, compressed air supply, provisions for heating, and means of control. The conditions in the salt spray chamber, including the positioning of the specimens, content of the salt solution, and temperature and pressure to be maintained, shall be as defined in ASTM B117.

6.2.5.3 Preparation of test specimens

Two of the test panels shall be suitably scribed for testing in accordance with ASTM D1654.

6.2.5.4 Exposure to test specimens

All test specimens shall be tested in the salt spray chamber for a period of 200 h continuously, except for short daily interruptions necessary to inspect the test specimen or replenish the solution in the reservoir.

6.2.5.5 Procedure

After completion of the exposure period, the scribed specimens shall be processed in accordance with either Method A (air blow-off) or Method B (scraper) as defined in ASTM D1654.

6.2.5.6 Evaluation

The scribed specimens shall then be evaluated for creepage from the scribe mark in accordance with Rating Table 1 of ASTM D1654. The nonscribed specimens shall be evaluated for degree of blistering in accordance with ASTM D714.

6.2.5.7 Performance

The scribed specimens shall be judged to have met the requirements of the test if their rating number is five or higher as determined by ASTM D1654. The nonscribed specimens shall be judged to have met the requirements of the test if their blistering size is six or higher, and their frequency designation is F or M as determined by ASTM D714.

6.3 Production tests

Production tests for switchboards shall include the following: control wiring insulation test, control wiring continuity, polarity and phase verification, and sequence tests.

Copyright © 2005 IEEE. All rights reserved.

Copyright The Institute of Electrical and Electronics Engineers, Inc.
Provided by IHS under license with IEEE
No reproduction or networking permitted without license from IHS
Not for Resale

6.3.1 Control wiring insulation test

A test voltage of rated power frequency shall be applied after all circuit grounds have been disconnected. Either 1500 V for 1 min or 1800 V for 1 s may be utilized. All wires shall be tested either individually or in groups. At the option of the manufacturer, switchboard-mounted devices that have been individually tested may be disconnected during the test.

6.3.2 Control wiring continuity

The correctness of the control wiring of the switchboard shall be verified by either or both of the following:

a) Actual electrical operation of the component control devices

b) Individual circuit continuity checks by electrical circuit testers

6.3.3 Polarity and phase verification

Test shall be made to ensure that connections to meters or relays, etc., are correctly made to the proper phase and with proper polarity. Instruments shall be tested to ensure that the pointers move in the proper direction and that the direction of indicated quantities is correct.

6.3.4 Sequence tests

Switchboards involving sequential operation of devices shall be tested to ensure that the devices in the sequence function properly and in the order intended.

This sequence test need not include remote equipment controlled by the switchboard. However, this equipment may be simulated, where necessary.

6.4 Field dielectric test

When dielectric withstand tests are to be made on switchboards after installation in the field, the switchboard shall not be tested at greater than 75% of the test values given in 6.3.1. Some devices must be disconnected because the applicable industry standard involves a lower or different permissible dielectric test.

As an alternative to ac dielectric tests, an insulation-resistance test using a dc voltage level no less than the ac level listed in 6.3.1 × 1.414 × 0.75 for not more than 1 min with a minimum measured insulation resistance of 1 MΩ.

NOTE—Field tests are recommended when new units are added to an existing installation or after major field modifications are made. The equipment should be put in good condition prior to the field test. It is not expected that equipment shall be subjected to these tests after it has been stored for long periods of time or has accumulated a large amount of dust, dirt, moisture, or other contaminants without first being restored to good condition.

Copyright © 2005 IEEE. All rights reserved.

Copyright The Institute of Electrical and Electronics Engineers, Inc.
Provided by IHS under license with IEEE
No reproduction or networking permitted without license from IHS
Not for Resale

7. Construction

7.1 General requirements

7.1.1 Phase or polarity arrangements for ac

When facing the front of the assembled devices as viewed from the outside of the switchboard, the phase arrangement on a three-phase control switchboard shall be 1, 2, 3 (or A, B, C) from front to back, top to bottom, or left to right. For inclined panels, the arrangement shall be as viewed perpendicular to the panel. Certain types of equipment may require other phasing arrangements. In these cases, the phasing shall be suitably indicated.

7.1.2 Polarities for dc

When facing the front of the assembled devices as viewed from the outside of the switchboard, polarities of dc connections shall be positive, negative from front to back, top to bottom, or left to right. For inclined panels, the arrangement shall be viewed perpendicular to the panel. Certain types of equipment may require other polarity arrangements. In these cases, the polarities shall be suitably indicated.

7.1.3 Phase sequence

The phase sequence, unless otherwise specified, shall be such that, when considering voltage to neutral on a polyphase system with respect to the element of time, the voltage of Phase 1 will reach a maximum ahead of the voltage of Phase 2, Phase 3, etc. This sequence shall be designated as phase sequence in the order 1, 2, 3. Other suitable designations for the same order of rotation may be used.

7.1.4 Grounding

A ground system bus shall be included that will electrically connect together the structures in a switchboard assembly and shall run the full length of the switchboard.

At all points of connection any nonconductive coating, such as paint, between the ground bus and the assembly shall be removed or penetrated to ensure good electrical contact.

The ground bus for each assembly shall have provision for connecting to the station ground bus. Circuits connected to the ground bus shall be arranged so that each may be disconnected without disturbing the continuity of the ground bus or any other grounded circuit.

Equipment mounted on switchboards shall be grounded as required, including a separate, isolated grounding system for low-energy circuits, if required.

Equipment mounted on switchboard structures, such as cases of instruments, instrument transformers, meters, relays, and similar devices, shall be considered as being adequately grounded when secured to these structures by metal mounting screws with adequate provision for penetrating the paint film.

The ground bus shall be a copper conductor and shall be at least one size larger than the largest size conductor used in the switchboard. A copper bus bar with equivalent or greater ampacity may be used.

Copyright © 2005 IEEE. All rights reserved.

Copyright The Institute of Electrical and Electronics Engineers, Inc.
Provided by IHS under license with IEEE
No reproduction or networking permitted without license from IHS
Not for Resale

7.1.5 Control and secondary circuits and devices

7.1.5.1 Control, secondary, and logic level wiring

Flame-retardant, 600 V insulated stranded copper wire shall be used for internal wiring between components of switchboard assemblies and to terminals for connection to external controls, metering, or instrumentation. Wiring within components is covered by standards applicable to those devices and is not covered by this standard.

The switchboard manufacturer is responsible for the performance of the wiring system provided by the manufacturer within the switchboard. This responsibility applies to the integrity of internally generated signals in the control wiring and may require the use of special precautions such as twisted pair, shielded wire, or segregation of certain wires.

No splices shall be allowed in the switchboard wiring.

7.1.5.1.1 Wiring across a hinge

Wiring that crosses a hinge shall be suitable for this use, as defined by all of the following criteria:

a) The wire shall be sufficiently flexible to withstand repeated door movement without sustaining damage to the wire strands or insulation.

b) The loop formed by the wiring as it crosses the hinge shall be secured to the equipment at both ends, in such a manner that negligible strain is transmitted to wire beyond the securements.

c) The wire loop is to be protected between the securements to provide a degree of protection against damage to the wire strands or insulation as the panel is moved.

d) No sharp edges or objects are allowed in the path swept by the wire loop as the panel is operated.

e) For No. 14 AWG and larger wire, stranding shall be C or D stranding.

7.1.5.1.2 Wire size

Wire must be suitable for the anticipated maximum steady-state current. The size chosen must also accommodate voltage drop including the effect of intermittent heavy loads (e.g., shunt trip coils, inrush from relays). The criteria in Table 2 shall be used as minimums.

Table 2—Wire size

Maximum steady-state load (A)	Minimum wire size (AWG)
30 < Load ≤ 40	No. 8
20 < Load ≤ 30	No. 10
15 < Load ≤ 20	No. 12
10 < Load ≤ 15	No. 14
7 < Load ≤ 10	No. 16
Load ≤ 7	No. 18

Copyright © 2005 IEEE. All rights reserved.

Copyright The Institute of Electrical and Electronics Engineers, Inc.
Provided by IHS under license with IEEE
No reproduction or networking permitted without license from IHS
Not for Resale

EXCEPTION: Multiple-conductor cable (two or more insulated wires inside a common insulated jacket) such as logic-level and/or supervisory circuits may use stranded wire sized as required by the circuit.

Wiring for control loads over 40 A shall be applied using ampacities from the 75 °C column of Table 310-16 in NFPA 70 (NEC).

Wiring for current transformer and shunt trip circuits shall be no less than No. 14 AWG, regardless of load. Thermocouple wiring is specifically excluded from the above ampacity requirements. It shall meet the voltage, current, and temperature requirements of the circuit in which it is used and the location where it is installed.

NOTE—Where long connections to the control source are necessary, the cable must be large enough to prevent excessive voltage drop.

7.1.5.1.3 Wire protection and support

Bushings, grommets, or other mechanical protection shall be provided for wiring where it passes through a metal sheet, barrier, or raceway. Wiring shall be adequately supported to prevent stress from causing damage of any kind to the conductors or the insulation.

7.1.5.1.4 Wire types

Control wiring shall be rated for 600 V, be rated for 90 °C, and be flame-retardant. Wire shall be type SIS as listed in NFPA 70 (NEC) or an equivalent such as XHHW or RFHH-2. Wire shall meet the requirements of NEMA WC70/ICEA S-95-658 as applicable.

EXCEPTION: In addition, low-energy signal wiring may be used as required by the manufacturer of a specific component. This exception includes wiring such as the following:

— Remote thermal devices (RTDs)

— RS232 conductor

— RS485 conductor

— Thermocouples

— Coaxial cables

— Fiber optics

— Ribbon cables

— Shielded twisted pair

— Unshielded twisted pair

Special consideration of such wiring should be given with respect to criteria in 7.1.5.1.1.

Low-energy signal wiring shall be separated from wiring operating at higher voltages unless both wires are insulated for the highest voltage.

7.1.5.2 Secondary-wiring terminals

Stranded control wire shall have solderless terminals of the type wherein the body of the terminal is crimped or indented onto the conductor. Solderless terminals are not required for connection to devices that

Copyright © 2005 IEEE. All rights reserved.
--`,,```,,,,````-`-`,,`,,`,`,,`---
Copyright The Institute of Electrical and Electronics Engineers, Inc.
Provided by IHS under license with IEEE
No reproduction or networking permitted without license from IHS
Not for Resale

have integral pressure terminal connector wire terminating provisions. On supervisory control and annunciator equipment, the wires may be soldered into terminals or, where desirable, directly to devices.

NOTE—In the absence within this standard of definitive performance requirements, compliance with this subclause can be assessed by referencing UL 486A.

7.1.5.3 Terminal blocks

Terminal blocks incorporating screw or stud-and-nut type terminals shall accommodate wire lugs or similar devices affixed to stranded wire. Screw or stud-and-nut type terminals intended for use with stranded wire shall be such that all strands of the conductor are confined. Terminal blocks incorporating pressure connectors shall not damage the wire; and, when terminating stranded conductors, all strands shall be clamped within the connector. No more than two conductors shall be terminated at any one terminal point. This restriction does not apply to flat preformed jumpers.

Terminal blocks for external connections shall be suitable to accept AWG No. 10 stranded wire.

The use of solid wire for external connections is not recommended.

EXCEPTION: Multiple-conductor cable (two or more insulated wires inside a common insulated jacket), such as logic-level and/or supervisory circuits, may utilize appropriately sized terminal blocks.

NOTE—In the absence within this standard of definitive performance requirements, compliance with this subclause can be assessed by referencing UL 486A.

7.1.5.4 Device function numbers

Device function numbers shall be in accordance with IEEE Std C37.2.

7.1.5.5 Voltage limits of instrument and control circuits

Voltage and current transformers, or other equivalent means, shall be used for all instruments, meters, and relays connected to ac circuits over 254 V (ac) to reduce the voltage on instrument wiring prior to when the wiring enters the control switchboard.

DC instruments, meters, and relays may be used directly on circuits up to 280 V (dc) if their cases are bonded to the switchboard in accordance with 7.1.4.

7.1.5.6 Polarity of dc connections to device coils

Where coils on switchboard devices are connected to a dc supply and, when deenergized, are not disconnected from both the positive and negative supply leads, such coils shall be connected so that, when deenergized, they will be left connected to the negative supply lead to minimize the possibility of corrosion.

7.1.5.7 Voltage circuit protection

Voltage circuits shall be protected within control switchboard as follows:

a) Circuits supplied from external sources (ac or dc) shall have short-circuit protection either at the source or within the switchboard. Short-circuit protection may be omitted on circuits from constant-current-type devices, such as voltage sensors and voltage devices.

b) Circuits supplied from internal sources (ac or dc) shall have short-circuit protection within the same section as the supply source.

Copyright © 2005 IEEE. All rights reserved.
--`,,```,,,,````-`-`,,`,,`,`,,`---

Copyright The Institute of Electrical and Electronics Engineers, Inc.
Provided by IHS under license with IEEE
No reproduction or networking permitted without license from IHS
Not for Resale

c) Overcurrent protection shall be provided in accordance with NFPA 70 (NEC), except in circuits where interruption of the circuit may create a hazard.

7.1.5.8 Current transformer secondary circuit protection

Overcurrent protection of current transformer secondary circuits shall not be provided.

7.1.5.9 Equipment location

All devices, terminal blocks, etc., shall be located so that their wiring connections and mounting hardware are accessible without removing other equipment or wire.

7.1.5.10 Electrical noise

Where low-energy circuits are included in the same assembly with power or switching circuits, the use of shielded conductor, metallic conduit, or physical separation (or a combination of these) should be considered to reduce electrical noise problems.

7.1.5.11 Drawings

Drawings shall be prepared so that they may be used for wiring and checking. The drawings shall show wire destinations and equipment identification.

7.1.6 Miscellaneous

7.1.6.1 Nameplate marking

The following minimum information shall be given on the switchboard assembly's nameplate:

a) Manufacturer's name and address
b) Manufacturer's type designation (optional)
c) Manufacturer's identification reference
d) Rated maximum voltage (where applicable)
e) Rated power frequency (where applicable)
f) Date of manufacture

7.1.6.2 Wiring devices

Lighting fixtures provided in enclosures shall be of a type and location so that lamps may be safely replaced without deenergizing the other equipment and shall be equipped with mechanical protection for the light bulbs (except for lighting systems that do not pose a burn or fragmentation hazard). Convenience outlets shall be of the two-pole, three-wire grounding type and shall be protected by a ground-fault circuit interrupter.

7.1.6.3 Covers

For ease of handling, cover plates that are intended to provide access for inspection and maintenance shall not exceed 1.1 m^2 area or 27 kg unless they are equipped with lifting means or hinges.

Copyright © 2005 IEEE. All rights reserved.

Copyright The Institute of Electrical and Electronics Engineers, Inc.
Provided by IHS under license with IEEE
No reproduction or networking permitted without license from IHS
Not for Resale

7.1.6.4 Cable space

Adequate clear cable space for field control cables shall be provided.

7.1.6.5 Heaters

Heaters, if used, shall be mounted so that adjacent devices are not adversely affected and personnel safety is not compromised.

7.2 Materials and finish

7.2.1 Materials

The materials for switchboards shall be suitably supported sheet metal. The minimum thickness shall be No. 14 MSG (nominal thickness 1.9 mm [0.0747 in]).

The minimum thickness is based on the use of steel. Where other metals are used, the thickness shall be modified to provide equivalent strength and deflection. For example, if aluminum alloy sheet having a yield strength of 140 MPa is used in the place of sheet steel, to provide equivalent strength and deflection, it is required that the thickness specified in the previous paragraph be increased by 50%.

Doors or panels used to support devices shall be increased in thickness or otherwise strengthened, as necessary, to support the devices.

NOTE—Two sheets of suitable thickness may be used to obtain the equivalent thickness.

7.2.2 Finishes and color

All steel surfaces to be coated (painted) shall receive a phosphatizing treatment or equivalent prior to application of the coating. As an alternative, corrosion-resistant metals (such as stainless steel or galvanized steel) or zinc-plated coating may be utilized.

External and internal surfaces shall be coated with at least one coat of corrosion-resistant material.

All steel surfaces, both painted and corrosion-resistant metals, shall comply with the requirements of 6.2.5.

The under-surfaces of outdoor assemblies shall additionally receive either a corrosion-resistant undercoating or an additional thickness of corrosion-resistant material.

The preferred color for the finish on control switchboards is light gray No. 61 in accordance with ASTM D1535-2001 (Munsell notation 8.3 G6.10/0.54).

NOTE 1—Internal detail parts may have metallic plating or equivalent in lieu of paint finish.

NOTE 2—For testing, a recognized organic-coating system that has been investigated and found suitable for use as protection against atmospheric corrosion of electrical equipment steel enclosures for outdoor use may be utilized.

NOTE 3—Exposed surfaces on outdoor equipment shall be coated with material capable of absorbing ultraviolet (UV) radiation without chalking or other damage.

Copyright © 2005 IEEE. All rights reserved.

Copyright The Institute of Electrical and Electronics Engineers, Inc.
Provided by IHS under license with IEEE
No reproduction or networking permitted without license from IHS
Not for Resale

7.3 Indoor switchboards

Switchboards for indoor applications shall provide a degree of protection against contact with live equipment.

7.3.1 Requirements

When completely and properly installed, indoor enclosures shall

a) Provide a degree of protection against limited amounts of falling dirt; however, it need not prevent the entry of dust or liquids.

b) Prevent the insertion of the end portion of a straight rod of the specified diameter into the equipment cavity of the enclosure when subjected to the rod entry test.

c) Not rust when subjected to a coating (paint) qualification test for 200 h.

7.3.2 Design tests

The indoor enclosures shall be tested and evaluated by the following:

a) Rod entry test of 6.2.4.

b) Coating (paint) qualification test of 6.2.5.

NOTE—For open vertical switchboards, only item c) in 7.3.1 and item b) in 7.3.2 apply.

7.4 Outdoor switchboards

Switchboards for outdoor applications shall be housed in ventilated enclosures intended primarily to provide a degree of protection against falling rain, sleet, and external ice formations.

7.4.1 Features

When completely and properly installed, outdoor enclosures shall

a) Meet requirements of 6.2.2.

b) Require the use of a tool to gain access to the equipment or have provision for padlocking.

c) Have doors equipped with latches and stops to hold the doors in the open position.

d) Prevent the insertion of the end portion of a straight rod of the specified diameter into the equipment cavity of the enclosure when subjected to the rod entry test.

e) Not rust when subjected to the coating (paint) qualification test for 200 h.

f) Have heaters or other effective means to minimize internal condensation.

7.4.2 Design tests

The outdoor enclosures shall be tested and evaluated by the following:

a) Rain test of 6.2.2

b) Rod entry test of 6.2.4

Copyright © 2005 IEEE. All rights reserved.

Copyright The Institute of Electrical and Electronics Engineers, Inc.
Provided by IHS under license with IEEE
No reproduction or networking permitted without license from IHS
Not for Resale

c) Coating (paint) qualification test of 6.2.5

NOTE—External icing tests are not required because switchboards have no external cavities to trap water when mounted in the normal position.

8. General application guide

8.1 Unusual service conditions

It is strongly recommended that the usual service conditions, as described in 4.1, be provided for control switchboard applications (artificially, if necessary). However, if unusual conditions exist and cannot be eliminated, the considerations discussed in 8.1.1 through 8.1.4 apply.

NOTE—Any unusual service condition should be specified by the user.

8.1.1 Ambient air temperature above 40 °C

When switchboards are applied where the ambient air temperature is higher than 40 °C, the performance of various components may be affected, and special consideration should be given to these applications.

8.1.2 Ambient air temperature below –20 °C

Special consideration is also required when switchboards are applied where the ambient air temperature is less than –20 °C. Space heating and thermal insulation to minimize the effects of exposure should be considered. If such measures are not possible, the effect of low temperatures on the functional performance of switchboard components and on materials such as control wire insulation should be considered.

8.1.3 Application at unusual altitudes

Switchboard devices that depend on air for an insulating and cooling medium will have a higher temperature rise and a lower dielectric withstand capability when operated at altitudes above values specified in 4.1. For devices used in switchboard assemblies, standards covering the specific devices should be used to determine the specific altitude correction factors. For example, relays are covered by IEEE Std C37.90.

8.1.4 Modification of equipment for unusual environments

Successful performance of standard switchboards may be extended to unusual environments by special considerations when developing equipment specifications. Several construction modifications that will mitigate the effects of these environments may be made in accordance with 8.1.4.1 through 8.1.4.5, but the emphasis should be on eliminating such conditions if at all possible. However, if these undesirable conditions cannot be eliminated, more frequent maintenance may be required.

8.1.4.1 Exposure to damaging fumes, vapors, steam, salt air, and oil vapors

Indoor and outdoor equipment intended for exposure to damaging fumes, vapors, steam, salt air, and/or oil vapors should be provided with the following modifications:

a) All structural parts should be covered with a corrosion- or rust-resisting primer.

b) All steel parts that are not painted or plated should be covered with protective grease.

Copyright © 2005 IEEE. All rights reserved.

Copyright The Institute of Electrical and Electronics Engineers, Inc.
Provided by IHS under license with IEEE
No reproduction or networking permitted without license from IHS
Not for Resale

c) All coils should be impregnated with insulating compound and covered with an appropriate protective coating.

d) Heaters, in quantity and rating sufficient to minimize condensation in all compartments, should be furnished. Condensation could be a problem and should be evaluated. Heaters shall not cause external surfaces accessible to operators in the normal course of duties to exceed a total temperature of 70 °C.

8.1.4.2 Exposure to excessive, abrasive, magnetic, or metallic dust

For indoor and outdoor equipment intended for exposure to dusty environments, ventilated enclosures may be furnished with the ventilating openings equipped with dust filters. The requirements for these filters vary over such a range that standard specifications for their application are not practicable. Both washable and disposable filters are available. Where used, they must be cleaned or replaced at intervals, depending upon the amount of dust in the air. Filters that are not cleaned or changed when required can cause excessive equipment temperature or condensation.

The type of filter used should be selected based on the size of dust particles encountered and the extent to which dust is to be excluded. Where very fine dust particles are to be excluded, disposable filters soaked in oil should be used. These must be changed at frequent intervals.

The type of filter (nonmetallic or metallic) should be selected based on service conditions, such as the exposure to rain.

Forced ventilation may be required depending upon the volume of air required for ventilation and the severity of the environment. When a blower and filter are furnished based on conditions of the environment, they should be installed on the intake to minimize the possibility of drawing dust or other foreign matter into and throughout the switchboard assembly.

8.1.4.3 Exposure to hot and humid climate

Indoor and outdoor equipment intended for exposure to hot and humid climates should be made fungus resistant by the following modifications:

a) Heaters in quantity and rating sufficient to minimize condensation in all compartments should be furnished.

b) Secondary wiring should, if practicable, be inherently fungus resistant.

c) All impregnated coils should, if practicable, be encapsulated with an inherently fungus-resistant material.

d) Paints, such as alkyd enamels, having a fungus- and rust-resistant property should be used.

Insulation, if practicable, should be inherently fungus resistant.

Materials that are made fungus resistant by means of a coating should have the coating reapplied at periodic intervals per the manufacturer's recommendations.

8.1.4.4 Exposure to explosive mixtures of dust or gases

Application of switchboards for electrically classified (hazardous) locations is not recommended.

Copyright © 2005 IEEE. All rights reserved.

Copyright The Institute of Electrical and Electronics Engineers, Inc.
Provided by IHS under license with IEEE
No reproduction or networking permitted without license from IHS
Not for Resale

8.1.4.5 Exposure to abnormal vibration, shocks, or tilting

Indoor and outdoor equipment is designed for mounting on level structures free from vibration, shock or tilting.

Since installation conditions vary widely, it is recommended that the manufacturer be consulted for each specific application where vibration, shocks, or tilting are to be encountered.

It is important that the full nature of the abnormal motion be specified. The magnitude and frequency range of the dynamic motion is required so that resonances may be investigated. This is usually specified by means of an acceleration response spectrum curve for the mounting surface on which the switchboard is to be installed. The response spectrum is a plot of the maximum response of single-degree-of-freedom bodies at a damping value expressed as a percent of critical damping of different natural frequencies, when these bodies are rigidly mounted on the surface of interest (that is, on the ground for the ground response spectrum or on the floor for the floor response spectrum) when that surface is subjected to a given abnormal motion as modified by an intervening structure. The response spectrum is useful in designing a test or in making an analysis of the performance of the switchboard equipment mounted on the same surface and subjected to the same motion.

In the case of tilting, it is also important that the maximum angles of tilt, both transverse and longitudinal, be specified. The exact performance requirements should also be defined. It should be recognized that equipment that is specifically designed for a usual installation on a substantially level surface free from excessive vibration, shock, or tilting may be damaged and may not be able to function properly when subjected to excessive motion and displacement. Hence, the application should be carefully analyzed, and the essential performance requirements should be precisely defined.

8.1.4.6 Exposure to seismic shock

Seismic capabilities are not required for control switchboards. For applications where seismic events are of concern, the following guidance is given:

Class 1: For critical equipment whose function both during and after the seismic event must be assured, see IEEE Std C37.81.

Class 2: For equipment where misoperations during the seismic event can be accepted, but maintaining structural integrity and the ability to function after the seismic event is required, IEEE Std C37.81 can still be used, by omitting the requirement to demonstrate equipment functionality during the seismic event and by reducing the generic response spectra levels by 50% (the full level spectra include extra margin necessary for nuclear applications).

8.2 Nuclear power plant application

Even though this standard does not apply to nuclear generating stations, it may be used for guidance.

When control switchboards are applied in nuclear power generating stations, they should meet the requirements of pertinent standards that have been developed for such applications.

Copyright © 2005 IEEE. All rights reserved.

Copyright The Institute of Electrical and Electronics Engineers, Inc.
Provided by IHS under license with IEEE
No reproduction or networking permitted without license from IHS
Not for Resale

9. Handling, storage, and installation guide

9.1 General

This clause is a guide for the handling, storage, and installation of switchboards and emphasizes safety aspects and other considerations when working with this type of equipment. It supplements, but does not replace, the manufacturer's detail instructions on these subjects. The objective is to furnish additional guidelines to promote and enhance a reliable installation.

The manufacturers of switchboards are to supply instruction books and drawings for their equipment, containing detailed recommendations for storage, handling, installation, operations, and maintenance.

Personnel responsible for these functions should review these recommendations before handling the equipment. Particular attention should be given to recommendations for preparation of foundation and forms on which the switchboard is to be mounted. One set of manufacturer's instruction books should remain with the switchboard when in storage or at the installation site.

9.2 Handling

9.2.1 Shipping

Switchboards should be carefully inspected and packed before leaving the factory. Shock absorbers or air ride vans should be considered for sensitive equipment.

9.2.2 Receiving

Immediately upon receipt, the equipment should be examined for damage that may have been sustained during transit. If damage is evident or indications of rough handling are visible, the carrier (transportation company) and the manufacturer should be notified promptly.

Only authorized personnel should be permitted to handle the equipment. Care should be exercised in handling each piece of equipment (even if crated) because parts may be damaged.

9.2.3 Rigging

Instructions for lifting and handling the equipment should be contained in the manufacturer's instruction books and drawings and shall be provided with the packaging. The rigging should be adequate for the size and weight of the equipment.

9.2.4 Storage

Indoor switchboards that cannot be installed immediately should be stored in a dry, clean location and should remain covered during the storage period. The longer the period of storage, the greater the care required for protection of the equipment. During storage, the switchboard should be placed on a level surface to prevent unnecessary strain and possible distortion. During the construction period, protection should be provided against dust, dirt, falling objects, dripping water, excessive water, excessive moisture, and other possible causes of damage to the equipment. Any temporary covering should not restrict ventilation and should not be removed until the equipment is ready for installation. It is preferable to store indoor equipment within a heated building. If this is not possible, special precaution should be taken to keep the equipment sufficiently warm with adequate ventilation to prevent condensation during the storage period. If necessary, temporary heating should be installed in the equipment.

Copyright © 2005 IEEE. All rights reserved.

Copyright The Institute of Electrical and Electronics Engineers, Inc.
Provided by IHS under license with IEEE
No reproduction or networking permitted without license from IHS
Not for Resale

If outdoor switchboards cannot be installed and energized, temporary power must be provided for the operation of the space heaters provided in order to prevent condensation of moisture within the housing.

Ventilation openings in switchboards should be left open to permit proper circulation of air.

9.2.5 Installation

When installing switchboards, the following steps shall be taken:

a) Protect workers adequately from live parts with barriers, screens, etc.

b) Observe Accredited Standards Committee C2 (NESC) rule 124 when guarding live parts.

9.2.6 Removal of shipping members

Before installation of switchboards, a careful check should be made to ensure that all members included for shipping purposes have been removed.

9.2.7 Connections

9.2.7.1 Control connections

When a switchboard assembly consists of several shipping sections, control wires between shipping sections should be reconnected as marked by the manufacturer. Connections that are to be connected to terminals in apparatus remote from the switchboard should be carefully checked against the connection diagram. When making connections to terminals, care should be exercised to assure that the connections are properly made.

9.2.7.2 Grounding

Sections of ground bus previously disconnected at shipping sections must be reconnected when the units are installed. Make sure that all secondary wiring is connected to the switchboard ground bus as indicated on the drawings. The ground bus should be connected to the system ground with as direct a connection as possible and should not be run in metal conduit unless the conduit is adequately bonded to the circuit. A permanent low-resistance ground is essential for adequate protection and safety.

9.3 Pre-operation check

Care must be exercised to prevent the switchboard from being energized while preliminary tests are being conducted. All internal connections should be examined to ensure that they have not been loosened or damaged during shipment or installation, and all bolted connections and joints should be tightened to ensure good contact. All wiring connections should be checked for tightness, including those at terminal blocks.

All ties and blocking from the relay armatures or discs should be removed before the control power is applied.

Protective relays included with the switchboard should be tested for correct connections and operation at the factory. However, the protective device settings for current, voltage, or other quantities must be made by the user in accordance with the user's operating practices. The manufacturer's instruction books should be studied carefully before setting the protective devices.

It is recommended that the integrity of control buses be checked with an ohmmeter to ensure against short circuits in the control wiring. Control wiring should be given a dielectric test or be insulation-resistance

Copyright © 2005 IEEE. All rights reserved.

Copyright The Institute of Electrical and Electronics Engineers, Inc.
Provided by IHS under license with IEEE
No reproduction or networking permitted without license from IHS
Not for Resale

tested. After the switchboard has been installed and all interconnections completed, all control schemes should be operationally tested and connections given a final check for phase rotation/sequence before the switchboard is finally energized for service.

Copyright © 2005 IEEE. All rights reserved.

Copyright The Institute of Electrical and Electronics Engineers, Inc.
Provided by IHS under license with IEEE
No reproduction or networking permitted without license from IHS
Not for Resale

Annex A

(informative)

Bibliography

[B1] ANSI Y14.15-1966 (1988), American National Standard for Electrical and Electronics Diagrams (including supplements: ANSI Y14.5a-1971 and ANSI Y14.15b-1973).[11]

[B2] ANSI Z535.4-2002, American National Standard for Product Safety Signs and Labels.

[B3] IEC 60439-1: 2004, Low-voltage switchgear and controlgear assemblies – Part 1: Type-tested and partially type-tested assemblies.[12]

[B4] IEEE 100, *The Authoritative Dictionary of IEEE Standards Terms*, Seventh Edition.[13]

[B5] IEEE Std C37.14™-2002, IEEE Standard for Low-Voltage DC Power Circuit Breakers Used in Enclosures.[14]

[B6] IEEE Std C37.20.1™-2002, IEEE Standard for Metal-Enclosed Low-Voltage Power Circuit Breaker Switchgear.

[B7] IEEE Std C37.20.2™-1999, IEEE Standard for Metal-Clad Switchgear.

[B8] IEEE Std C37.20.3™-2001, IEEE Standard for Metal-Enclosed Interrupter Switchgear.

[B9] IEEE Std 4™-1995, IEEE Standard Techniques for High-Voltage Testing, including IEEE Std 4a-2001, Amendment to IEEE Standard Techniques for High-Voltage Testing.

[B10] IEEE Std 141™-1993 (R1999), IEEE Recommended Practice for Electric Power Distribution for Industrial Plants (*IEEE Red Book*™).

[B11] IEEE Std 142™-1991, IEEE Recommended Practice for Grounding of Industrial and Commercial Power Systems (*IEEE Green Book*™).

[B12] IEEE Std 241™-1990 (R1997), IEEE Recommended Practice for Electric Power Systems in Commercial Buildings (*IEEE Gray Book*™).

[B13] IEEE Std 242™-2001, IEEE Recommended Practice for Protection and Coordination of Industrial and Commercial Power Systems (*IEEE Buff Book*™).

[B14] IEEE Std 693™-1997, IEEE Recommended Practices for Seismic Design of Substations.

[11] ANSI publications are available from the Sales Department, American National Standards Institute, 25 West 43rd Street, 4th Floor, New York, NY 10036, USA (http://www.ansi.org/).
[12] IEC publications are available from the Sales Department of the International Electrotechnical Commission, Case Postale 131, 3, rue de Varembé, CH-1211, Genève 20, Switzerland/Suisse (http://www.iec.ch/). IEC publications are also available in the United States from the Sales Department, American National Standards Institute, 25 West 43rd Street, 4th Floor, New York, NY 10036, USA.
[13] IEEE publications are available from the Institute of Electrical and Electronics Engineers, 445 Hoes Lane, Piscataway, NJ 08854, USA (http://standards.ieee.org/).
[14] The IEEE standards or products referred to in this clause are trademarks of the Institute of Electrical and Electronics Engineers, Inc.

Copyright © 2005 IEEE. All rights reserved.

Copyright The Institute of Electrical and Electronics Engineers, Inc.
Provided by IHS under license with IEEE
No reproduction or networking permitted without license from IHS
Not for Resale

[B15] NEMA 250-2003, Enclosures for Electrical Equipment (1000 Volts Maximum).[15]

[B16] NFPA 70B-2002, Recommended Practice for Electrical Equipment Maintenance.[16]

[B17] UL 44-1999, Thermoset-Insulated Wires and Cables.[17]

[15] NEMA publications are available from Global Engineering Documents, 15 Inverness Way East, Englewood, Colorado 80112, USA (http://global.ihs.com/).
[16] NFPA publications are available from Publications Sales, National Fire Protection Association, 1 Batterymarch Park, P.O. Box 9101, Quincy, MA 02269-9101, USA (http://www.nfpa.org/).
[17] UL standards are available from Global Engineering Documents, 15 Inverness Way East, Englewood, Colorado 80112, USA (http://global.ihs.com/).

Copyright © 2005 IEEE. All rights reserved.

Copyright The Institute of Electrical and Electronics Engineers, Inc.
Provided by IHS under license with IEEE
No reproduction or networking permitted without license from IHS
Not for Resale