IEEE Standards

C37.20.7™

IEEE Guide for Testing Medium-Voltage Metal-Enclosed Switchgear for Internal Arcing Faults

IEEE Power Engineering Society

Sponsored by the
Switchgear Committee

IEEE

Published by
The Institute of Electrical and Electronics Engineers, Inc.
3 Park Avenue, New York, NY 10016-5997, USA

20 May 2002

Print: SH94967
PDF: SS94967

Copyright The Institute of Electrical and Electronics Engineers, Inc.
Provided by IHS under license with IEEE
No reproduction or networking permitted without license from IHS

Not for Resale

IEEE Guide for Testing Medium-Voltage Metal-Enclosed Switchgear for Internal Arcing Faults

Sponsor

Switchgear Committee
of the
IEEE Power Engineering Society

Approved 7 December 2001

IEEE-SA Standards Board

Abstract: A procedure for testing and evaluating the performance of medium-voltage metal-enclosed switchgear for internal arcing faults is covered in this guide. A method of identifying the capabilities of this equipment is given. Service conditions, installation, and application of equipment are also discussed.
Keywords: accessibility, arc, internal arcing fault, bus, compartment, metal-clad switchgear, metal-enclosed interrupter switchgear, metal-enclosed switchgear, overpressure, protection

The Institute of Electrical and Electronics Engineers, Inc.
3 Park Avenue, New York, NY 10016-5997, USA

Copyright © 2002 by the Institute of Electrical and Electronics Engineers, Inc.
All rights reserved. Published 20 May 2002. Printed in the United States of America.

Print: ISBN 0-7381-3076-1 SH94967
PDF: ISBN 0-7381-3077-X SS94967

No part of this publication may be reproduced in any form, in an electronic retrieval system or otherwise, without the prior written permission of the publisher.

Copyright The Institute of Electrical and Electronics Engineers, Inc.
Provided by IHS under license with IEEE
No reproduction or networking permitted without license from IHS Not for Resale

IEEE Standards documents are developed within the IEEE Societies and the Standards Coordinating Committees of the IEEE Standards Association (IEEE-SA) Standards Board. The IEEE develops its standards through a consensus development process, approved by the American National Standards Institute, which brings together volunteers representing varied viewpoints and interests to achieve the final product. Volunteers are not necessarily members of the Institute and serve without compensation. While the IEEE administers the process and establishes rules to promote fairness in the consensus development process, the IEEE does not independently evaluate, test, or verify the accuracy of any of the information contained in its standards.

Use of an IEEE Standard is wholly voluntary. The IEEE disclaims liability for any personal injury, property, or other damage, of any nature whatsoever, whether special, indirect, consequential, or compensatory, directly or indirectly resulting from the publication, use of, or reliance upon this or any other IEEE Standard document.

The IEEE does not warrant or represent the accuracy or content of the material contained herein, and expressly disclaims any express or implied warranty, including any implied warranty of merchantability or fitness for a specific purpose, or that the use of the material contained herein is free from patent infringement. IEEE Standards documents are supplied "**AS IS**."

The existence of an IEEE Standard does not imply that there are no other ways to produce, test, measure, purchase, market, or provide other goods and services related to the scope of the IEEE Standard. Furthermore, the viewpoint expressed at the time a standard is approved and issued is subject to change brought about through developments in the state of the art and comments received from users of the standard. Every IEEE Standard is subjected to review at least every five years for revision or reaffirmation. When a document is more than five years old and has not been reaffirmed, it is reasonable to conclude that its contents, although still of some value, do not wholly reflect the present state of the art. Users are cautioned to check to determine that they have the latest edition of any IEEE Standard.

In publishing and making this document available, the IEEE is not suggesting or rendering professional or other services for, or on behalf of, any person or entity. Nor is the IEEE undertaking to perform any duty owed by any other person or entity to another. Any person utilizing this and any other IEEE Standards document should rely upon the advice of a competent professional in determining the exercise of reasonable care in any given circumstances.

Interpretations: Occasionally questions may arise regarding the meaning of portions of standards as they relate to specific applications. When the need for interpretations is brought to the attention of IEEE, the Institute will initiate action to prepare appropriate responses. Since IEEE Standards represent a consensus of concerned interests, it is important to ensure that any interpretation has also received the concurrence of a balance of interests. For this reason, IEEE and the members of its societies and Standards Coordinating Committees are not able to provide an instant response to interpretation requests except in those cases where the matter has previously received formal consideration.

Comments for revision of IEEE Standards are welcome from any interested party, regardless of membership affiliation with IEEE. Suggestions for changes in documents should be in the form of a proposed change of text, together with appropriate supporting comments. Comments on standards and requests for interpretations should be addressed to:

Secretary, IEEE-SA Standards Board
445 Hoes Lane
P.O. Box 1331
Piscataway, NJ 08855-1331
USA

Note: Attention is called to the possibility that implementation of this standard may require use of subject matter covered by patent rights. By publication of this standard, no position is taken with respect to the existence or validity of any patent rights in connection therewith. The IEEE shall not be responsible for identifying patents for which a license may be required by an IEEE Standard or for conducting inquiries into the legal validity or scope of those patents that are brought to its attention.

The IEEE and its designees are the sole entities that may authorize the use of IEEE-owned certification marks and/or trademarks to indicate compliance with the materials set forth herein.

Authorization to photocopy portions of any individual standard for internal or personal use is granted by the Institute of Electrical and Electronics Engineers, Inc., provided that the appropriate fee is paid to the Copyright Clearance Center. To arrange for payment of licensing fee, please contact Copyright Clearance Center, Customer Service, 222 Rosewood Drive, Danvers, MA 01923, USA; +1 978 750 8400. Permission to photocopy portions of any individual standard for educational classroom use can also be obtained through the Copyright Clearance Center.

--`,,`,,`-`-`,,`,,`,`,,`---

Copyright The Institute of Electrical and Electronics Engineers, Inc.
Provided by IHS under license with IEEE
No reproduction or networking permitted without license from IHS

Not for Resale

IEEE-SA Trademark Usage/Compliance Statement

Proper usage of the trademark **IEEE Std C37.20.7.2001™** is mandatory and is to be followed in all references of the Standard. The mark **IEEE®** is the registered trademark of the Institute of Electrical and Electronics Engineers, Inc., and must be used in bold type. It is to appear with the registered trademark symbol "®" the first time "**IEEE**" appears in the text. The use of "IEEE Std xxxx-200x" should include the trademark symbol "TM" (e.g., **IEEE Std C37.20.7.2001™**) at least the first time it is used in the text, unless the number of the standard is also trademark registered (e.g., **802®**), then the symbol "®" must be used.

It is not permissible to use the standard number alone or with "**IEEE**" to indicate conformance or compliance with the associated standard. The user of the Standard should contact the Manager, Standards Licensing and Contracts for information concerning issues regarding indicating product compliance with an **IEEE** standard. To represent that a product has been designed to meet an **IEEE** standard, it is permissible to state that "the product has been engineered, designed or manufactured with the intent to meet the requirements of **IEEE Std xxxx-200x™**." However, it is *not* permissible to state or refer to a product as "xxxx compliant," "xxxx certified," "**IEEE xxxx** conformant," "**IEEE xxxx** certified," or the like, unless the user has obtained a Certification License from the IEEE.

Copyright © 2002 IEEE. All rights reserved.

Copyright The Institute of Electrical and Electronics Engineers, Inc.
Provided by IHS under license with IEEE
No reproduction or networking permitted without license from IHS
Not for Resale

Introduction

(This introduction is not a part of IEEE Std C37.20.7-2001, IEEE Guide for Testing Medium-Voltage Metal-Enclosed Switchgear for Internal Arcing Faults.)

The standards and guides in the C37 series have been developed over a period of many years through the cooperative efforts of users, specifiers, manufacturers, and other interested parties. Failure within a switchgear assembly—whether from a defect, an unusual service condition, lack of maintenance, or mis-operation—may initiate an internal arc. There is little likelihood of an internal arc in equipment meeting the requirements of IEEE Std C37.20.2-1999 or IEEE Std C37.20.3-2001,[a] but the possibility cannot be completely disregarded. The intent of this guide is to address the testing procedure for internal arcing faults in metal-enclosed switchgear.

In the 1970s, principally in Europe, interest arose in evaluating electrical equipment under conditions of internal arcing. As a result, a draft Annex AA to IEC 298, A.C. Metal-Enclosed Switchgear and Controlgear for Rated Voltages Above 1 kV and Up to and Including 52 kV, was prepared in 1976 and approved by the IEC in 1981. The present edition of IEC 298 (currently IEC 60298 [B1])[b] was approved in 1990.

Knowledge of the arc resistance testing guide in IEC 298 spread to North America and was used as the basis for EEMAC G14-1, 1987, Procedure for Testing the Resistance of Metal-Clad Switchgear Under Conditions of Arcing Due to an Internal Fault. EEMAC G14-1 incorporated improvements in knowledge and understanding in more than a decade of use of Annex AA of IEC 298-1981 in Europe.

The development of IEEE Std C37.20.7-2001 rests heavily on Annex AA of IEC 298-1981 and Amendment 1-1994, and incorporates many of the refinements originated in EEMAC G14-1.

Even when arc-resistant construction is specified, it is strongly recommended that supplemental power system protection be provided. This supplemental protection should limit the total energy that can be delivered in the event of internal arcing faults. This protection can be provided in a variety of ways, depending on the nature of the system. Among the forms of protection that may be appropriate are current-limiting fuses on the primary side of power transformers, zone differential or bus differential relaying, ground differential protection, or arc sensing systems sensitive to light or pressure effects that accompany internal arcing faults. The objective of such protection must be to cause the interruption of all sources of power to the arcing fault in a time interval that is shorter than the arcing duration capability demonstrated by the tests contained within this guide (see 4.3).

[a]Information on references can be found in Clause 2.
[b]The numbers in brackets correspond to those of the bibliography in Annex B.

--`,,`-`-`,,`,,`,`,,`---
Copyright © 2002 IEEE. All rights reserved.
Copyright The Institute of Electrical and Electronics Engineers, Inc.
Provided by IHS under license with IEEE
No reproduction or networking permitted without license from IHS
Not for Resale

Participants

The Standards Committee on Power Switchgear, C37, who reviewed and approved this guide, had the following personnel at the time of approval:

E. R. Byron, *Chair*
M. Calwise, *Co-Secretary, NEMA*
N. Ahmad, *Co-Secretary, IEEE*
D. L. Swindler, *Executive Vice-Chair of IEC Activities*

Organization Represented	*Name of Representative*
Electric Light & Power Group/Edison Electric Institute	D. E. Galicia
	J. L. Koepfinger
	G. J. Martuscello
	Y. J. Musa
	E. M. Worland
Institute of Electrical and Electronics Engineers	T. A. Burse
	K. Gray
	Alec C. Monroe
	R. J. Puckett
	T. E. Royster
	R. D. Garzon
	J. Wood
National Electrical Manufacturers Association	G. T. Jones
	R. W. Long
	T. W. Olsen
	G. Sakats
	D. L. Stone
	E. R. Byron
Testing Lab Group	E. Roseen
	P. J. Notarian
Tennessee Valley Authority	J. Nelson
Association of Iron & Steel Engineers	(vacant)
International Electrical Testing Association (NETA)	A. Peterson
U.S. Department of Agriculture	H. Bowles
U.S. Department of the Army Office of the Chief of Engineers	J. A. Gilson
U.S. Department of the Navy, Naval Construction Battalion Center	D. Mills
Western Area Power Administration	(vacant)
National Electric Contractors Association	D. Harwood

The members of the IEEE Switchgear Assemblies Subcommittee (Working Group), who developed this guide, were as follows:

M. Wactor, *Chair*
T. W. Olsen, *Vice Chair*

C. J. Ball	S. Kapodistrias	W. McCowen
M. Beard	D. J. Lemmerman	J. E. Smith
E. R. Byron		J. Zawadzki

Copyright © 2002 IEEE. All rights reserved.

Copyright The Institute of Electrical and Electronics Engineers, Inc.
Provided by IHS under license with IEEE
No reproduction or networking permitted without license from IHS
Not for Resale

The members of the Switchgear Assemblies Subcommittee of the IEEE Switchgear Committee, who reviewed and approved this guide, were as follows:

D. J. Lemmerman, *Chair*

C. J. Ball
T. A. Burse
E. R. Byron
J. J. Dravis
D. J. Edwards
S. S. (Dave) Gohil
R. Iyer
J. M. Jerabek
W. E. Laubach
A. Morgan
P. J. Notarian
G. R. Nourse
T. W. Olsen
G. O. Perkins
E. Peters
R. J. Puckett
G. Sakats
S. H. Telander
M. Wactor

The following members of the balloting group voted on this guide. Balloters may have voted for approval, disapproval, or abstention.

Edwin Averill
W. J. Bergman
Anne Bosma
Ted A. Burse
Eldridge R. Byron
Carlos L. Cabrera-Rueda
James Carroll
Guru Dutt Dhingra
Alexander Dixon
Louis Doucet
Julian J. Dravis
Denis Dufournet
Donald G. Dunn
Douglas J. Edwards
Marcel Fortin
Douglas H. Giraud
Mietek T. Glinkowski
S. S. (Dave) Gohil
Randall C. Groves
Harold L. Hess
Richard Jackson
Robert Jeanjean
Joseph L. Koepfinger
Stephen R. Lambert
Thomas W. LaRose
Ward E. Laubach
John G. Leach
David J. Lemmerman
George N. Lester
Albert Livshitz
Deepak Mazumdar
Nigel P. McQuin
Gary L. Michel
Georges F. Montillet
Frank J. Muench
Yasin I. Musa
Paul J. Notarian
George R. Nourse
Ted W. Olsen
Miklos J. Orosz
Neville Parry
Gordon O. Perkins
David N. Reynolds
Hugh C. Ross
Gerald Sakats
Vincent Saporita
Devki Sharma
M. Dean Sigmon
Ned Simon
H. Melvin Smith
James E. Smith
Guy St. Jean
Frank Stevens
David Stone
Alan D. Storms
David Swindler
Chand Z. Tailor
Stan H. Telander
Thomas J. Tobin
Michael Wactor
Charles L. Wagner
James W. Wilson
Robert Yanniello
Janusz Zawadzki

When the IEEE-SA Standards Board approved this guide on 7 December 2001, it had the following membership:

Donald N. Heirman, *Chair*
James T. Carlo, *Vice Chair*
Judith Gorman, *Secretary*

Satish K. Aggarwal
Mark. D. Bowman
Gary R. Engmann
Harold E. Epstein
H. Landis Floyd
Jay Forster*
Howard M. Frazier
Ruben D. Garzon
James H. Gurney
Richard J. Holleman
Lowell G. Johnson
Robert J. Kennelly
Joseph L. Koepfinger*
Peter H. Lips
L. Bruce McClung
Daleep C. Mohla
James W. Moore
Robert F. Munzner
Ronald C. Petersen
Gerald H. Peterson
John B. Posey
Gary S. Robinson
Akio Tojo
Donald W. Zipse

*Member Emeritus

Copyright © 2002 IEEE. All rights reserved.
Copyright The Institute of Electrical and Electronics Engineers, Inc.
Provided by IHS under license with IEEE
No reproduction or networking permitted without license from IHS
Not for Resale

Also included are the following nonvoting IEEE-SA Standards Board liaisons:

Alan Cookson, *NIST Representative*
Donald R. Volzka, *TAB Representative*

Savoula Amanatidis,
IEEE Standards Managing Editor

--`,,`-`-`,,`,,`,`,,`---
Copyright © 2002 IEEE. All rights reserved.

Copyright The Institute of Electrical and Electronics Engineers, Inc.
Provided by IHS under license with IEEE
No reproduction or networking permitted without license from IHS
Not for Resale

Contents

1. Overview 1

1.1 Scope 1

1.2 Background 1

2. References 3

3. Definitions 3

3.1 General 3

3.2 Qualifying terms—general 4

3.3 Qualifying terms—switchgear 4

3.4 Common or related terms 4

4. Ratings 4

4.1 Accessibility type 4

4.2 Internal arcing short-circuit current 4

4.3 Arcing duration 4

5. Tests 5

5.1 Test arrangements 5

5.2 Test conditions 7

5.3 Arc initiation 9

5.4 Indicators (for observing the thermal effects of gases) 9

6. Assessment 10

6.1 Assessment of test results 10

6.2 Test report 11

6.3 Nameplate 12

7. Application considerations 12

7.1 Potential areas for arcing 12

7.2 Examples of means to reduce the effects of internal arcing 12

Copyright © 2002 IEEE. All rights reserved.

Copyright The Institute of Electrical and Electronics Engineers, Inc.
Provided by IHS under license with IEEE
No reproduction or networking permitted without license from IHS

Not for Resale

7.3 Design changes 13
7.4 Installation considerations 14
7.5 Equipment maintenance 14

Annex A (informative) Optional performance features 15

Annex B (informative) Bibliography 17

Copyright © 2002 IEEE. All rights reserved.

Copyright The Institute of Electrical and Electronics Engineers, Inc.
Provided by IHS under license with IEEE
No reproduction or networking permitted without license from IHS
Not for Resale

Copyright The Institute of Electrical and Electronics Engineers, Inc.
Provided by IHS under license with IEEE
No reproduction or networking permitted without license from IHS
Not for Resale

IEEE Guide for Testing Medium-Voltage Metal-Enclosed Switchgear for Internal Arcing Faults

1. Overview

1.1 Scope

This guide establishes a method by which metal-enclosed switchgear, as defined by IEEE Std C37.20.2-1999 and IEEE Std C37.20.3-2001, can be tested for resistance to the effects of arcing due to an internal fault. This guide applies only to equipment utilizing air as the primary insulating medium and rated above 1000 V ac. It applies to both indoor and outdoor equipment; however, special consideration must be given to the building size and construction for indoor applications (not addressed by this guide).

The tests and assessments described in this guide are only applicable to arcing faults occurring entirely in air within the enclosure when all doors and covers are properly secured. This guide does not apply to arcing faults that occur within a component of the switchgear assembly, such as instrument transformers, sealed interrupting devices, fuses, etc.

Switchgear designs that meet the requirements of this guide will be referred to as arc-resistant metal-enclosed interrupter switchgear or arc-resistant metal-clad switchgear as applicable, or, generally, as arc-resistant switchgear.

1.2 Background

1.2.1 Consequences of internal arc faults

The occurrence of arcing inside switchgear produces a variety of physical phenomena. For example, the arc energy resulting from an arc developed in air at atmospheric pressure will cause a sudden pressure increase inside the enclosure and localized overheating. This results in both severe mechanical and thermal stresses on the equipment. Moreover, the materials involved in or exposed to the arc can produce hot decomposition products, either gaseous or particulates, which could be discharged to the outside of the enclosure.

The procedures outlined in this guide make it possible to evaluate the effect of abnormal internal pressure acting on properly latched or secured covers, doors, inspection windows, etc. The procedures

--`,,-`-`,,`,,`,`,,`---
Copyright © 2002 IEEE. All rights reserved.

Copyright The Institute of Electrical and Electronics Engineers, Inc.
Provided by IHS under license with IEEE
No reproduction or networking permitted without license from IHS
Not for Resale

also take into consideration the thermal effects of the arc on the enclosure and the effects of ejected hot gases and glowing particles.

1.2.2 Equipment qualified to this guide

The use of equipment qualified to this guide is intended to provide an additional degree of protection to the personnel performing normal operating duties in close proximity to the equipment while the equipment is operating under normal conditions. Such equipment cannot ensure total personnel protection under all the circumstances that could exist at the time of an internal arcing fault. Further, it is not intended to provide this additional degree of protection to operating personnel who, in the normal performance of their duties, would be required to open enclosure doors or panels or otherwise alter the equipment from its normal operating condition. The areas where an additional degree of protection is provided for each accessibility type are defined in 4.1. These do not include access areas above or below the switchgear. Examples of personnel activities or installation conditions not covered by this guide include, but are not limited to the following:

a) Personnel on top of the switchgear for maintenance or cleaning
b) Personnel working above the switchgear, on a lift, or on a catwalk
c) Switchgear installed on an open grating
d) Installations over a cable vault large enough for personnel to enter the vault

The selection of equipment qualified to this guide does not imply protection from equipment damage or ensure continued operation without disruption to electrical service. It is expected that switchgear involved in an internal arcing fault will require rework or replacement prior to being returned to service.

The equipment qualified by this guide is tested as a grounded system to produce the maximum fault conditions and can be applied on both grounded and ungrounded systems.

1.2.3 Application of this guide

This guide is intended to assist in selection of applicable test points and test procedures to analyze equipment under the stress of an internal arcing fault. It is not intended to provide design and application information for the manufacture or use of arc-resistant switchgear.

This guide does not cover all effects that may constitute a risk, such as the release of toxic materials, nor the effects on building construction (see Clause 7 and Table 1).

As indicated in 1.1, this guide addresses arc faults occurring entirely in air within the enclosure, and does not address abnormal arcing within components. This restriction is imposed by considerations of testing and practicality. Such component failures, especially liquid-filled components, are excluded because of the difficulty in designing tests that could be performed consistently. This restriction should not reduce the usefulness of tests conducted in accordance with this guide for evaluating the performance of metal-enclosed switchgear, but it should be recognized that failure of components may cause failure of the assembly to meet the assessment criteria of Clause 6.

1.2.4 Relevance of tests

The arcing fault tests described in this guide are intended to assist in assessing the ability of the equipment to withstand the effects of an arcing fault. It should be realized that it is not possible to

Copyright © 2002 IEEE. All rights reserved.
Copyright The Institute of Electrical and Electronics Engineers, Inc.
Provided by IHS under license with IEEE
No reproduction or networking permitted without license from IHS
Not for Resale

simulate all conditions that can produce arcing faults in service and that the arc does not always behave in a repeatable manner. It follows that an assembly proven by such tests cannot be guaranteed to withstand all arcing faults that can occur in service.

2. References

This guide shall be used in conjunction with the following publications. If the following publications are superseded by an approved revision, the revision shall apply.

IEEE Std C37.20.2-1999, IEEE Standard for Metal-Clad Switchgear.[1]

IEEE Std C37.20.3-2001, IEEE Standard for Metal-Enclosed Interrupter Switchgear.

IEEE Std C37.100-1992 (Reaff 2001), IEEE Standard Definitions for Power Switchgear.

3. Definitions

3.1 General

The definitions of terms contained in this guide, or in other guides or standards referred to in this guide, are not intended to embrace all legitimate meanings of the terms. They are applicable only to the subject matter treated in this guide. IEEE 100, *The Authoritative Dictionary of Standards Terms*, Seventh Edition [B2][2] should be referenced for terms not defined in this clause.

If a term is not defined in this guide, the definition found in IEEE Std C37.100-1992 applies. An asterisk (*) following a definition indicates that the definition in this guide is not contained in IEEE Std C37.100-1992, while a dagger (†) indicates that the definition differs from that in IEEE Std C37.100-1992.

3.1.1 arc-resistant switchgear: Equipment designed to withstand the effects of an internal arcing fault as indicated by successfully meeting the test requirements of this guide.*

3.1.2 compartment: A portion of a vertical section enclosing a specific component or function.*

3.1.3 components: Any medium-voltage device connected to the primary circuit and intended for use within the confines of the switchgear enclosure. Examples include the main interrupting or switching device, voltage transformers, and control power transformers.†

3.1.4 internal arcing fault: An unintentional discharge of electrical energy in air within the confines of a switchgear enclosure.*

3.1.5 internal arcing short-circuit current: The maximum value of the root-mean-square (rms) symmetrical prospective current applied to the equipment under conditions of an arcing fault for the arcing duration specified by the manufacturer.*

3.1.6 pressure-relief device: Any opening, covered or uncovered, designed to exhaust the overpressure from an internal arcing fault from the confines of the switchgear enclosure or specific compartment of the switchgear enclosure.*

[1]IEEE publications are available from the Institute of Electrical and Electronics Engineers, 445 Hoes Lane, P.O. Box 1331, Piscataway, NJ 08855-1331, USA (http://standards.ieee.org/).
[2]The numbers in brackets correspond to those of the bibliography in Annex B.

Copyright © 2002 IEEE. All rights reserved.

Copyright The Institute of Electrical and Electronics Engineers, Inc.
Provided by IHS under license with IEEE
No reproduction or networking permitted without license from IHS
Not for Resale

3.1.7 solid insulation: An applied insulation that is 1) homogeneous and essentially free of voids, 2) conformal to the shape of the bus, and 3) bonded to the bus in such a way that removal requires destroying the insulation. Typical examples of such insulations are epoxies or polymers applied by fluidized bed and liquid dip processes. Specifically excluded from this definition are tape, shrink tubing, and all types of boots and slip-on insulation.*

3.2 Qualifying terms—general

Qualifying terms are defined in IEEE 100 [B2] and the user is referred to the definitions given therein.

3.3 Qualifying terms—switchgear

Qualifying terms are defined in IEEE Std C37.100-1992 and the user is referred to the definitions given therein.

3.4 Common or related terms

Common or related terms are defined in IEEE Std C37.100-1992 and the user is referred to the definitions given therein.

4. Ratings

An IEEE guide cannot mandate or define equipment ratings. This guide is intended to establish a level of performance for the equipment under specific conditions. While these conditions are not an equipment rating, they are the basis of the equipment evaluation described in this guide and are listed in Clause 4 for convenience.

4.1 Accessibility type

A distinction is made between two levels of accessibility to switchgear assemblies. These levels correspond directly to the indicator placement given in 5.4.2.

—*Type 1*. Switchgear with arc-resistant designs or features at the freely accessible front of the equipment only.

—*Type 2*. Switchgear with arc-resistant designs or features at the freely accessible exterior (front, back, and sides) of the equipment only.

4.2 Internal arcing short-circuit current

The internal arcing short-circuit current is the current level to be used as the prospective current value for testing. The preferred value of the internal arcing short-circuit current is the rated short-time current of the equipment.

4.3 Arcing duration

The arcing duration is the period of time the equipment can experience the effects of an internal arcing fault and meet the requirements specified by this guide in Clause 6.

The preferred arcing duration for this test is 0.5 s at the rated power frequency of the equipment.

Copyright © 2002 IEEE. All rights reserved.
Copyright The Institute of Electrical and Electronics Engineers, Inc.
Provided by IHS under license with IEEE
No reproduction or networking permitted without license from IHS
Not for Resale

5. Tests

5.1 Test arrangements

5.1.1 Considerations for all equipment

In the choice of test specimen configuration, the following points should be considered:

a) The test should be carried out on a compartment(s) not previously subjected to internal arcing.
b) The mounting arrangements of the test specimen should be as prescribed by the manufacturer.
c) The configuration of each vertical section should be as follows:

    1) The vertical section(s) should be fully equipped. Mockups of internal components may be substituted, provided that they have the same volume and are of similar material as the original items.
    2) The compartments within the vertical section should be representative of the minimum volume utilized for the maximum size component and the maximum unbraced wall surface utilized by the design. The sample should contain the maximum number of openings designed for equipment ventilation and the minimum number of openings designed for arc fault pressure relief.
    3) All ventilation openings utilized for equipment cooling and designed to close during an overpressure event must be open and functional prior to starting the test.
    4) If the equipment is intended for use with control devices, such as relays and meters, mounted on exposed doors or covers, a representative sample of these devices should be present on the test specimen. When this is not practical, the compartment directly behind the mounting point should be evaluated to verify that any abnormal pressure developed during the test will not cause the mounted devices to be displaced or allow exposure to the arc. Indicators should be placed inside this compartment to verify that the effects of the fault do not enter into the compartment.
    5) Any openings created in the equipment as a result of manufacturing, assembly, or modification, which have an intentional covering, plug, or similar device, may have that device installed. Openings that do not have intentional coverings cannot be blocked in any way for this test.

d) The test specimen should be grounded at the normal ground point(s) or to the test supply neutral through an adequate conductor.
e) The arc should be initiated in a way that is representative of faults that could occur under service conditions. See 7.1 for typical locations for fault initiation.
f) When the equipment is to be installed indoors, the test arrangement should simulate room conditions in a manner that enables the manufacturer to provide application guidelines that consider the following:

    1) Distance to adjacent walls
    2) Ceiling height
    3) Any obstruction located near the equipment that could deflect hot gas into an area defined by the accessibility type
    4) Any openings beneath the equipment (cable vaults) that could allow hot gas to escape into an area defined by the accessibility type

    If the design incorporates an exhaust system that vents pressure directly out of the room, no room simulation is necessary. The test sample exhaust system must be representative of the longest length utilized by the design.

Copyright © 2002 IEEE. All rights reserved.

Copyright The Institute of Electrical and Electronics Engineers, Inc.
Provided by IHS under license with IEEE
No reproduction or networking permitted without license from IHS
Not for Resale

g) When the equipment employs a single expansion chamber intended to vent abnormal internal pressure from multiple compartments, the expansion chamber should be representative of the smallest volume chamber connected to the longest possible length of exhaust system utilized by the design.
h) Each variation in bus phase spacing (energized surface to energized surface) and clearance to ground (energized surface to grounded surface) should be tested in each compartment, except for configurations where only the size and/or quantity of bus changes. In these configurations, a representative enclosure can be tested by using the smallest physical bus size to produce the greatest phase-to-phase and phase-to-ground clearances.
i) The number of vertical sections for any given test shall be limited to four to minimize the effects of bus impedance on the peak current.

5.1.2 Considerations for metal-clad switchgear (IEEE Std C37.20.2-1999)

Construction for this type of equipment utilizes insulated bus and compartmentalization. These construction techniques require that each compartment design be evaluated for performance under the conditions associated with an arcing fault. Testing of individual vertical sections, which can be combined into a multiple section line-up, is acceptable (see item i of 5.1.1). The following factors affect performance and should be addressed by the test program:

a) When a vertical section is equipped with multiple compartments, each with its own pressure relief device, a typical vertical section can be used to perform the test provided that its compartments represent the smallest internal volume and/or the most restrictive method for relief of overpressure utilized for any of the design configurations.
b) Compartments specifically designed for medium-voltage auxiliary devices (control power transformers, voltage transformers, etc.) should be tested in standard configurations. Compartments designed for generic use should be tested with the most restrictive configuration (largest component or assembly that minimizes the available exhaust opening) to be utilized.
c) When the switchgear assembly employs fans for forced ventilation, the following applies:
    1) When there are covers over the ventilation openings for the fans, there shall be two tests performed: one with the fans off and the covers closed, and a second with the fans operating and the covers open.
    2) When the ventilation openings for the fans remain open at all times, the test shall be performed with the fans operating.
d) All bus insulation shall be present, including the bus joints (boots, tape, etc.), except at the point of arc initiation.

5.1.3 Considerations for metal-enclosed interrupter switchgear (IEEE Std C37.20.3-2001)

Construction for this type of equipment normally utilizes uninsulated bus. Through bushings for the main bus to pass from one vertical section to the next are not required, and large openings for this purpose are common. The factors that affect performance are listed below and should be addressed by the test program:

a) When the switchgear assembly consists of only one vertical section or the switchgear assembly consists of many vertical sections but employs through bushings for the main bus between each vertical section, each vertical section configuration utilized shall be tested. The test sample shall be representative of the minimum volume utilized in the design. Testing of individual vertical sections versus testing of a multiple section line-up is acceptable for all compartments, except the main bus compartment, which shall be evaluated with respect to the main bus compartments in the adjacent vertical sections.

Copyright © 2002 IEEE. All rights reserved.
Copyright The Institute of Electrical and Electronics Engineers, Inc.
Provided by IHS under license with IEEE
No reproduction or networking permitted without license from IHS
Not for Resale

b) When the switchgear assembly consists of multiple vertical sections and a large opening for the main bus to pass from one vertical section to the next, a representative assembly of vertical sections containing the minimum acceptable main bus compartment volume shall be tested.
c) When a vertical section is further divided into compartments by use of through bushings or barriers, each compartment containing medium-voltage components or bus shall be tested individually.
d) When the switchgear assembly employs fans for forced ventilation, the following applies:
    1) When there are covers over the ventilation openings for the fans, there shall be two tests performed: one with the fans off and the covers closed, and a second with the fans operating and the covers open.
    2) When the ventilation openings for the fans remain open at all times, the test shall be performed with the fans operating.
e) When each vertical section is equipped with its own device to relieve internal overpressure, a typical section can be used to perform the test provided that it represents the smallest internal volume for any of the sections and any openings between sections are sealed for the test.

5.2 Test conditions

5.2.1 General

The tests should be performed as a three-phase test for three-phase equipment unless the design is such that the phases cannot interact. Single-phase devices should be tested phase to ground. Polyphase devices, designed such that the phases cannot interact, can be tested as a single-phase device or as a polyphase device with each phase connected phase to ground.

The prospective short-circuit current is calibrated by applying current to the incoming terminals of the equipment, with a shorting bar connected to these terminals. Once the circuit is calibrated, the shorting bars are removed and arcing tests are performed (refer to 4.2 and 4.3). The physical size of the test sample can affect the current path and, therefore, the peak current delivered to the test point. It is therefore recommended that the size of the test sample (number of vertical sections and total length of bus) be limited to four vertical sections (see item i of 5.1.1).

5.2.2 Voltage

The preferred value for test voltage is the rated maximum voltage of the equipment. Where this is not possible due to laboratory constraints, a reduced voltage may be used. It is recommended that the reduced value be no less than 60% of the rated maximum voltage for the equipment. Reduced voltage testing is not recommended for equipment rated 5 kV and below.

The arc should not extinguish before the intended arcing duration (rated duration) has elapsed. It is recognized that some designs may have phase spacing large enough to extinguish arcing at maximum rated voltage. Should the arc in a test sample extinguish prior to completion of the rated arcing duration and with the test voltage set to the maximum rated voltage of the equipment, the test is considered valid, provided that the peak current requirement of 5.2.3 is met. When a reduced voltage is used, premature extinction of the arc is not acceptable.

Refer to 5.2.5 for details on test duration.

Copyright © 2002 IEEE. All rights reserved.

Copyright The Institute of Electrical and Electronics Engineers, Inc.
Provided by IHS under license with IEEE
No reproduction or networking permitted without license from IHS
Not for Resale

5.2.3 Current

5.2.3.1 AC component

Calibration value. The test current shall be calibrated to a value that is no less than the value assigned as the internal arcing short-circuit current (see 4.2).

Test value. The actual current delivered to the test point will be reduced by the impedance of the arc and the test sample bus. The maximum value of the ac component during the test shall not exceed the minimum value of the ac component during the test by more than 15%. Additionally, in tests performed at reduced voltage, the mean value of the ac component current during the test shall not be less than the internal arcing short-circuit current (see 4.2).

5.2.3.2 DC component

Calibration value. The instant of closing should be chosen so that the prospective value of the peak current flowing in one of the outer phases is not less than 2.6 times the value of the internal arcing short-circuit current for a 60 Hz system (2.5 for a 50 Hz system). The other outside phase current should begin with a major loop.

Test value. The actual current delivered to the test point will be reduced by the impedance of the arc and the test sample bus. For tests performed at 60 Hz, the peak current shall not be less than 90% of 2.6 times the rated internal arcing short-circuit current. For tests performed at 50 Hz, the peak current shall not be less than 90% of 2.5 times the rated internal arcing short-circuit current.

To minimize the reduction of current due to bus impedance, it is recommended that the length of internal bus be limited by using a maximum of four vertical sections within the test sample. Where this is not practical, the test current should be calibrated at the terminals of the specific section of the test sample.

5.2.4 Frequency of the test supply

The duration of the test has to be considered when setting the frequency of the test current and voltage. The arc energy is significantly affected by frequency when the arc duration is less than 50 ms. Where fast-acting protective devices limit the rated duration (duration of test arc) to 50 ms or less, the frequency at the beginning of the test shall be the rated frequency of the equipment ± 10%. For a rated duration greater than 50 ms, the frequency at the beginning of the test shall be the rated frequency of the equipment ± 20% and the frequency of the waveform should not deviate from the initial value by more than 8% for the duration of the test.

5.2.5 Duration of the tests

The fault current should flow for the duration specified as the arcing duration (see 4.3) at the rated power frequency (as described in 5.2.4) for the equipment. The preferred value of arcing duration is 0.5 s.

EXCEPTION—The test is considered valid when the test voltage is set in accordance with 5.2.2 to the rated maximum voltage of the equipment and the arc extinguishes prior to the preferred arcing duration. When premature extinction occurs, the peak current required by 5.2.3 shall be met.

Equipment utilizing devices that limit fault duration, such as fuses, relays, etc. (see 7.2.1 and 7.2.2), should be tested with the device installed and the laboratory circuit calibrated for the preferred duration of 0.5 s. The actual duration of current flow shall be controlled by the protective device and this will be the rated duration of the tested equipment (refer to 4.3).

Copyright © 2002 IEEE. All rights reserved.
Copyright The Institute of Electrical and Electronics Engineers, Inc.
Provided by IHS under license with IEEE
No reproduction or networking permitted without license from IHS
Not for Resale

5.2.6 Supply circuit

The neutral of the supply system has to be connected to the switchgear assembly by either a separate bus or the ground as permitted by the laboratory.

The connections shall not materially alter the test conditions.

Generally, the arc inside an enclosure can be fed from either of two directions. The direction to be chosen should be the one likely to result in the highest stress.

5.3 Arc initiation

The arc shall be initiated by means of a metal wire of 0.5 mm diameter or 24 American Wire Gage (AWG).

In single-phase devices, the arc should be initiated phase-to-ground. For multiphase devices, the arc should be initiated phase-to-phase between all phases except where phase conductors are separated by grounded metal in segregated-phase designs. For segregated-phase designs, the arc can be initiated between a single phase and ground.

The point of arc initiation should be chosen to produce the highest stress (highest arc voltage) in a way that can be considered to simulate realistic service conditions. This is most applicable to designs utilizing bare bus or bare conductor terminals on components.

The arc should be initiated at joints or gaps in the insulated conductors. Solid insulation should not be perforated to initiate the fault, except for cases where the insulation medium changes. In this case, the arc can be initiated between two adjacent phases, or one phase and ground in segregated-phase designs, by perforating the insulation at the point where the insulation medium changes and is representative of insulation failures that can appear in service. In three-phase devices, tested single-phase-to-ground or where the arc is initiated in only two phases, the test circuit shall remain a three-phase supply, allowing the fault to become three phase.

5.4 Indicators (for observing the thermal effects of gases)

5.4.1 General

Indicators are constructed from pieces of black cotton fabric (a full material description is provided at the end of this clause) arranged so that the cut edges are not exposed to the test sample, and each indicator is isolated from the others to prevent multiple ignitions from a single source. This is achieved by fitting them, for example, in a mounting frame, which extends a minimum of 13 mm to a maximum of 38 mm perpendicular to the plane established by the fabric and facing the test sample. The minimum dimensions of the exposed fabric are to be 150 mm × 150 mm. Refer to Figure 1 for indicator assembly dimensions.

Externally mounted vertical indicators are to be located from floor level to a minimum height of 2 m from the floor and at a distance of 100 mm ± 10% from the surface of the cloth to the switchgear facing all points where gas is likely to be emitted, based on accessibility type (e.g., joints, inspection windows, doors, etc.). If the equipment is intended for mounting on an elevated base, indicators should be placed below the base of the test sample to monitor gas escape at floor level.

Externally mounted horizontal indicators are to be located at a minimum height of 2 m from the floor and horizontally 0.8 m from the test sample, around the perimeter of the test sample as required by the

Copyright © 2002 IEEE. All rights reserved.

Copyright The Institute of Electrical and Electronics Engineers, Inc.
Provided by IHS under license with IEEE
No reproduction or networking permitted without license from IHS
Not for Resale

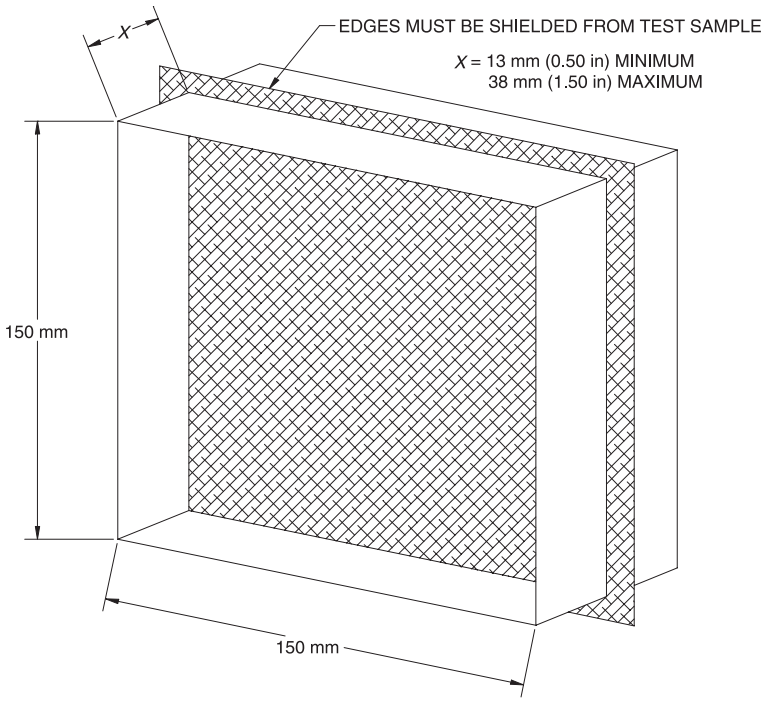

Figure 1 — Minimum dimensions recommended for indicator assembly

accessibility type to evaluate hazards from falling debris, particles, or gas reflected by room simulations or adjacent equipment. See item f of 5.1.1 for application information for room simulation.

Switchgear designed specifically for outdoor application do not require use of horizontal indicators.

Indicator material shall be untreated for fire retardance and be of 100% cotton interlining lawn fabric with a density of approximately 150 g/m^2. The color of the cloth (fabric) is black.

5.4.2 Indicator placement

—*Type 1*. Indicators are to be fitted in a vertical and, when applicable (see 5.4.1), a horizontal plane at the front of the switchgear to be tested.

—*Type 2*. Indicators are to be fitted in a vertical and, when applicable (see 5.4.1), a horizontal plane at the front, back, and sides of the switchgear to be tested.

6. Assessment

6.1 Assessment of test results

The following criteria are used to assess the equipment for the arcing phenomenon discussed in 1.2. The equipment shall meet all criteria to qualify as arc-resistant switchgear.

Criterion no. 1—That doors, covers, etc., do not open. Bowing or other distortion is permitted except on doors, covers, etc., which are intended to have devices such as relays, meters, or other control

Copyright © 2002 IEEE. All rights reserved.
Copyright The Institute of Electrical and Electronics Engineers, Inc.
Provided by IHS under license with IEEE
No reproduction or networking permitted without license from IHS
Not for Resale

devices mounted on them. Areas that are intended to mount such devices shall be identified as part of the test record. Refer to 6.2.

Criterion no. 2—That no parts are ejected into the vertical plane defined by the accessibility type. That no parts large enough to be hazardous are ejected from the top of the equipment. This includes large parts or those with sharp edges, e.g., doors, pressure-relief flaps, or cover plates. See Criterion no. 4 for assessment of falling debris and horizontal indicators. If the equipment is intended to have devices (relays or other control devices) mounted on exposed doors or covers, which are not present in the test sample, the area behind these doors or covers shall be evaluated for signs of deformation, which could cause these devices to become ejected [refer to item c (4) of 5.1.1].

Criterion no. 3—*Assessment of burn-through*. It is assumed that any opening in the switchgear caused by direct contact with an arc will also ignite an indicator mounted outside of the switchgear at that same point. Since it is not possible to cover the entire area under assessment with indicators, any opening in the area under assessment that results from direct contact with an arc is considered cause for failure.

—*Accessibility Type 1*. That arcing does not cause holes in the freely accessible front of the enclosure.

—*Accessibility Type 2*. That arcing does not cause holes in the freely accessible front, sides, and rear of the enclosure.

Criterion no. 4—That no indicators (refer to 5.4) ignite as a result of escaping gases or particles. Indicators ignited as a result of the burning of paint, labels, etc., are excluded from this assessment. High-speed movies or video may be utilized to evaluate the cause of indicator ignition. Holes in horizontally mounted indicators caused by particles that do not ignite the indicator are ignored.

Criterion no. 5—That all the grounding connections remain effective.

6.2 Test report

The following information should be given in the test report.

a) Description of the test unit with a drawing showing:
   1) The main dimensions of the switchgear
   2) The method of anchoring the switchgear to the floor and/or to the walls
   3) Any protective devices employed to limit fault current duration
   4) Dimensions described in item f of 5.1.1, where applicable
   5) Areas where devices such as relays, meters, and control devices may be mounted

This information is given to identify the design in the manufacturer's test report. It is not necessary to provide this construction information in a published test document for customer use.

b) Arrangement of the test connections and the point of initiation of the arc.
c) Arrangement of indicators with respect to the accessibility type.
d) The prospective calibration values shall be as follows:
   1) RMS value of the ac component of the prospective current
   2) Highest peak value of the prospective current
   3) Test duration as set by the laboratory
   4) Actual test voltage
   5) Frequency

Copyright © 2002 IEEE. All rights reserved.

Copyright The Institute of Electrical and Electronics Engineers, Inc.
Provided by IHS under license with IEEE
No reproduction or networking permitted without license from IHS
Not for Resale

e) The arcing current test values shall be as follows:

   1) Highest peak current value
   2) Duration of arc current
   3) RMS value of arcing current including the maximum, minimum, and ratio of maximum value of the ac current component to the minimum value. Refer to 5.2.3.

f) Oscillogram(s) showing currents and voltages.
g) Assessment of the test results and compliance with 6.1.

6.3 Nameplate

The following information should be provided on a nameplate specifically to identify the arc-resistant ratings of the switchgear:

a) Accessibility type
b) Internal arcing short-circuit current
c) Arcing duration

7. Application considerations

7.1 Potential areas for arcing

There are many areas where internal arcing can occur in switchgear. Table 1 lists some potential areas for internal arcing faults. Equipment should be evaluated in these areas when developing a test program. There are also many ways to reduce the effects of internal arcing faults. These devices and techniques and their effect on the installation and use of the equipment should be considered when applying this equipment.

7.2 Examples of means to reduce the effects of internal arcing

7.2.1 Protective devices

Rapid fault-clearing times can be used to limit the duration of the fault. High-speed arc fault detectors that are sensitive to light, pressure, or heat, or other high-speed fault detection schemes, such as high-speed differential bus bar protection, can be used to trip a high-speed interrupting device and remove power from the arcing fault.

7.2.2 Current-limiting fuses

Application of suitable current-limiting fuses in combination with switching devices can limit the short-circuit current and minimize the fault duration. The effects of using current-limiting devices that employ pyrotechnic means to commutate current to a current-limiting fuse have to be considered when evaluating designs utilizing such devices.

7.2.3 Pressure-relief flaps or devices

Use of appropriate means to relieve the rapid rise of pressure associated with internal arcing can reduce the potential for mechanical failure of equipment.

Copyright © 2002 IEEE. All rights reserved.
Copyright The Institute of Electrical and Electronics Engineers, Inc.
Provided by IHS under license with IEEE
No reproduction or networking permitted without license from IHS
Not for Resale

Table 1 — Locations, causes, and examples of measures decreasing the likelihood of, or reducing the risk of, internal faults

Locations where internal faults are more likely to occur	Possible causes of internal faults	Possible preventative measures
Cable terminations	Inadequate design	—Selection of adequate dimensions
	Faulty installation	—Avoidance of crossed cable connections —Checking of workmanship on site —Correct torque
	Failure of insulation (defective or missing)	—Checking of workmanship and/or dielectric test on site —On-line partial discharge monitoring
Disconnects —Switches —Grounding switches	Mis-operation	—Interlocks —Delayed reopening —Independent manual operation —Making capacity for switches and grounding switches —Instructions to personnel
Bolted connections and contacts	Corrosion	—Use of plating, corrosion-inhibiting coatings, and/or greases —Encapsulation, where possible
	Faulty assembly	—Checking of workmanship by suitable means —Correct torque
Instrument transformers	Ferroresonance	—Avoidance of these electrical influences by suitable design of the circuit
Circuit breakers	Insufficient maintenance	—Regular programmed maintenance —Instructions to personnel
All locations	Error by personnel	—Limitation of access by compartmentalization —Insulation embedded live parts —Instructions to personnel
	Aging under electric stresses	—Partial discharge tests (periodic or online)
	Pollution, moisture, entrance of dust, vermin, etc.	—Measures to ensure that the specified service conditions are achieved
	Overvoltages	—Surge protection —Adequate insulation coordination —Dielectric tests on site

7.2.4 Remote control

Use of remote control means can minimize the need for personnel to enter a room or space having energized electrical equipment.

7.3 Design changes

Any design changes from a tested design configuration to a particular project configuration can reduce the arc-resistant characteristics of the switchgear assembly. The manufacturer may certify the

Copyright © 2002 IEEE. All rights reserved.

Copyright The Institute of Electrical and Electronics Engineers, Inc.
Provided by IHS under license with IEEE
No reproduction or networking permitted without license from IHS
Not for Resale

particular project design based on test results, but shall describe any design modifications, such as size of enclosure, equipment included, structural changes, etc.

7.4 Installation considerations

7.4.1 Installation site

The overpressure in an electrical equipment room caused by an arc due to an internal fault in the switchgear and the effects of the ejection of gases from pressure-relief devices should be taken into consideration in the design of the building.

7.4.2 Procedures

Installation and operating procedures should identify potential hazards and identify any special procedures required to install and operate the equipment safely. The installer shall follow all instructions from the manufacturer concerning installation to assure that the completed installation is representative of the equipment tested.

7.5 Equipment maintenance

The manufacturer should identify the special characteristics of the equipment and detail the maintenance procedures that are required.

The equipment should be maintained in accordance with manufacturer's recommendations.

Copyright © 2002 IEEE. All rights reserved.
Copyright The Institute of Electrical and Electronics Engineers, Inc.
Provided by IHS under license with IEEE
No reproduction or networking permitted without license from IHS
Not for Resale

Annex A

(informative)

Optional performance features

A.1 Scope

The purpose of this annex is to provide additional testing measures that can be applied to the accessibility types described in 4.1 to evaluate the tested equipment for additional performance features. This additional performance is intended to reduce the collateral damage to adjacent compartments and equipment, and should not be interpreted to indicate any additional degree of protection for personnel.

There are other accessibility types described in other international testing guides, which are similar to those described in this guide. The user should take care to understand fully the differences and recognize that these accessibility types could have similar names, but differ greatly in test procedure and evaluation criteria.

A.2 Suffix "C"

The application of suffix "C" to Accessibility Type 1 or Type 2 indicates that the equipment meets the additional requirements of this Annex. It does not imply that the equipment can be operated with doors, covers, or panels opened or removed and still maintain its intended degree of protection (refer to 1.2.2).

Equipment qualified to the conditions described in A.2.1 and A.2.2 should be labeled as Type 1C or Type 2C (as appropriate) to differentiate it from the types described in 4.1. Note that this feature may not be applicable to all types of switchgear construction discussed in this guide. The suffix "C" designation is not applicable to equipment utilizing open bus or open frame construction.

A.2.1 Test procedure modification

Testing for the suffix "C" enhancement should be performed, as described in Clause 5 of this guide, with the following additions to the indicator placement given in 5.4.2 to evaluate the internal barriers.

Suffix "C" testing requires the placement of indicators within the interior compartments adjacent to the compartment in which the arc is initiated, to evaluate the entrance of ionized gases into those compartments.

a) The internally mounted indicators are to be located at a distance of 100 mm ± 10% from the interior surface being evaluated.
b) Internal indicators are mounted in any applicable plane, parallel to the surface being evaluated.
c) There is no height restriction for internally mounted indicators. These internal indicators shall be mounted for the applicable surfaces up to the full height of those surfaces.
d) It is assumed that any opening caused by direct contact with an arc will also ignite an indicator mounted adjacent to that opening. Since it is not possible to cover the entire area under assessment with indicators, any opening in the area of assessment that results from direct contact with an arc is considered cause for failure. Additionally, for the internal compartment testing, indicators should be placed along any welded or bolted assembly point within the compartment to evaluate ionized gas entering through openings caused by overpressure.

Copyright © 2002 IEEE. All rights reserved.

Copyright The Institute of Electrical and Electronics Engineers, Inc.
Provided by IHS under license with IEEE
No reproduction or networking permitted without license from IHS
Not for Resale

A.2.2 Evaluation procedure modification

Assessment of the test requires that all criteria identified in Clause 6 apply, with the following modification of Criterion no. 3.

—*Type 1C*. That arcing does not cause holes in the freely accessible front of the enclosure, or in the walls separating the compartment in which the arc is initiated and all adjacent compartments.

—*Type 2C*. That arcing does not cause holes in the freely accessible front, sides, and rear of the enclosure, or in the walls separating the compartment in which the arc is initiated and all adjacent compartments.

EXCEPTION—In metal-clad equipment (IEEE Std C37.20.2-1999), a fault in a main bus bar compartment of a vertical section is allowed to propagate into the main bus bar compartment of the adjacent vertical sections if the main bus bars are in the same circuit, but not if the main bus bars are in different circuits. Connections from the main bus bar to switchgear components are not considered to be part of the main bus, and propagation of a fault along these connections into the compartment containing the component is not allowed.

Copyright © 2002 IEEE. All rights reserved.
Copyright The Institute of Electrical and Electronics Engineers, Inc.
Provided by IHS under license with IEEE
No reproduction or networking permitted without license from IHS
Not for Resale

Annex B

(informative)

Bibliography

[B1] IEC 60298-1990, A.C. Metal-Enclosed Switchgear and Controlgear for Rated Voltages Above 1 kV and Up to and Including 52 kV.

[B2] IEEE 100, *The Authoritative Dictionary of Standards Terms*, Seventh Edition.

Copyright © 2002 IEEE. All rights reserved.

Copyright The Institute of Electrical and Electronics Engineers, Inc.
Provided by IHS under license with IEEE
No reproduction or networking permitted without license from IHS
Not for Resale