Recognized as an

American National Standard (ANSI)

IEEE Std C37.20.3-2001

(Revision of IEEE Std C37.20.3-1987)

IEEE Standard for Metal-Enclosed Interrupter Switchgear

Sponsor
IEEE Switchgear Committee
of the
IEEE Power Engineering Society

Approved 1 November 2001

American National Standards Institute

Approved 17 March 2001

IEEE-SA Standards Board

Abstract: This standard covers metal-enclosed interrupter (MEI) switchgear assemblies containing, but not limited to, such devices as interrupter switches; selector switches; power fuses; control, instrumentation and metering devices; and protective equipment. It includes, but is not specifically limited to, equipment for the control and protection of apparatus used for distribution of electrical power.
Keywords: metal-enclosed interrupter (MEI) switchgear, metal enclosed power switchgear, switchgear, switchgear assembly

---

The Institute of Electrical and Electronics Engineers, Inc.

3 Park Avenue, New York, NY 10016-5997, USA

Copyright © 2001 by the Institute of Electrical and Electronics Engineers, Inc.

All rights reserved. Published 17 August 2001. Printed in the United States of America.

Print: ISBN 0-7381-2836-8 SH94926

PDF: ISBN 0-7381-2837-6 SS94926

No part of this publication may be reproduced in any form, in an electronic retrieval system or otherwise, without the prior written permission of the publisher.

Copyright The Institute of Electrical and Electronics Engineers, Inc.
Provided by IHS under license with IEEE
No reproduction or networking permitted without license from IHS

Not for Resale

IEEE Standards documents are developed within the IEEE Societies and the Standards Coordinating Committees of the IEEE Standards Association (IEEE-SA) Standards Board. The IEEE develops its standards through a consensus development process, approved by the American National Standards Institute, which brings together volunteers representing varied viewpoints and interests to achieve the final product. Volunteers are not necessarily members of the Institute and serve without compensation. While the IEEE administers the process and establishes rules to promote fairness in the consensus development process, the IEEE does not independently evaluate, test, or verify the accuracy of any of the information contained in its standards.

Use of an IEEE Standard is wholly voluntary. The IEEE disclaims liability for any personal injury, property or other damage, of any nature whatsoever, whether special, indirect, consequential, or compensatory, directly or indirectly resulting from the publication, use of, or reliance upon this, or any other IEEE Standard document.

The IEEE does not warrant or represent the accuracy or content of the material contained herein, and expressly disclaims any express or implied warranty, including any implied warranty of merchantability or fitness for a specific purpose, or that the use of the material contained herein is free from patent infringement. IEEE Standards documents are supplied "**AS IS**."

The existence of an IEEE Standard does not imply that there are no other ways to produce, test, measure, purchase, market, or provide other goods and services related to the scope of the IEEE Standard. Furthermore, the viewpoint expressed at the time a standard is approved and issued is subject to change brought about through developments in the state of the art and comments received from users of the standard. Every IEEE Standard is subjected to review at least every five years for revision or reaffirmation. When a document is more than five years old and has not been reaffirmed, it is reasonable to conclude that its contents, although still of some value, do not wholly reflect the present state of the art. Users are cautioned to check to determine that they have the latest edition of any IEEE Standard.

In publishing and making this document available, the IEEE is not suggesting or rendering professional or other services for, or on behalf of, any person or entity. Nor is the IEEE undertaking to perform any duty owed by any other person or entity to another. Any person utilizing this, and any other IEEE Standards document, should rely upon the advice of a competent professional in determining the exercise of reasonable care in any given circumstances.

Interpretations: Occasionally questions may arise regarding the meaning of portions of standards as they relate to specific applications. When the need for interpretations is brought to the attention of IEEE, the Institute will initiate action to prepare appropriate responses. Since IEEE Standards represent a consensus of concerned interests, it is important to ensure that any interpretation has also received the concurrence of a balance of interests. For this reason, IEEE and the members of its societies and Standards Coordinating Committees are not able to provide an instant response to interpretation requests except in those cases where the matter has previously received formal consideration.

Comments for revision of IEEE Standards are welcome from any interested party, regardless of membership affiliation with IEEE. Suggestions for changes in documents should be in the form of a proposed change of text, together with appropriate supporting comments. Comments on standards and requests for interpretations should be addressed to:

Secretary, IEEE-SA Standards Board
445 Hoes Lane
P.O. Box 1331
Piscataway, NJ 08855-1331
USA

Note: Attention is called to the possibility that implementation of this standard may require use of subject matter covered by patent rights. By publication of this standard, no position is taken with respect to the existence or validity of any patent rights in connection therewith. The IEEE shall not be responsible for identifying patents for which a license may be required by an IEEE standard or for conducting inquiries into the legal validity or scope of those patents that are brought to its attention.

IEEE is the sole entity that may authorize the use of certification marks, trademarks, or other designations to indicate compliance with the materials set forth herein.

Authorization to photocopy portions of any individual standard for internal or personal use is granted by the Institute of Electrical and Electronics Engineers, Inc., provided that the appropriate fee is paid to Copyright Clearance Center. To arrange for payment of licensing fee, please contact Copyright Clearance Center, Customer Service, 222 Rosewood Drive, Danvers, MA 01923 USA; (978) 750-8400. Permission to photocopy portions of any individual standard for educational classroom use can also be obtained through the Copyright Clearance Center.

--`,,`-`-`,,`,,`,`,,`---

Copyright The Institute of Electrical and Electronics Engineers, Inc.
Provided by IHS under license with IEEE
No reproduction or networking permitted without license from IHS

Not for Resale

Introduction

(This introduction is not part of IEEE Std C37.20.3-2001, IEEE Standard for Metal-Enclosed Interrupter Switchgear.)

This standard has been revised to reflect needed technical changes that have been suggested since the last revision was published. The three substantive changes in this revision are as follows:

a) The asymmetrical factor for momentary rating has been changed from 1.6 to 1.55.
b) The impulse test requirements have been changed from 3 by 3 to 3 by 9. As a result, nine additional tests shall be run in case of flashover in the first set of the required three instead of the old requirement of three additional tests.
c) A time other than 2 s has been allowed for the short-time current when limited by the ability of the switch. As a result, a new rating, "rated short-time current duration," has been created.

The above changes reflect a move to harmonize with International Electrotechnical Commission and to accept current industry practices.

This standard uses IEEE Std 4-1978, IEEE Standard Techniques for High-Voltage Testing,[a] instead of IEEE Std 4-1995, the current revision of this document. This deviation from normal practice was done because the latter standard omits several correction factors and test procedures needed and used by the IEEE Switchgear Committee in standards for switchgear and breakers. The IEEE Switchgear Committee has requested coordination and revision of IEEE Std 4-1995 to address these test procedures and correction factors.

IEEE Std C37.20.3-2001 was prepared by the Power Switchgear Assemblies Technical Committee of the National Electrical Manufacturers Association (NEMA) and by the Switchgear Assemblies Subcommittee of the IEEE Switchgear Committee. NEMA is responsible for Clause 5 and Clause 7, and the Switchgear Assemblies Subcommittee is responsible for Clause 3, Clause 4, Clause 6, and Clause 8.

This standard includes only the requirements for metal-enclosed interrupter switchgear. These requirements were previously a part of IEEE Std C37.20-1969, IEEE Standard for Switchgear Assemblies Including Metal-Enclosed Bus (1974 consolidated edition). Other types of equipment previously included in IEEE Std C37.20-1969 have been incorporated in separate publications. IEEE Std C37.20-1969 has for many years covered all switchgear assemblies including metal-enclosed bus. Standards committees of IEEE Switchgear and NEMA Power Switchgear recommended that the document be further developed and, where appropriate, that the various sections be identified with their own standards. This approach also coordinates with the Conformance Test Procedure Standards.

This publication is one of a series covering switchgear assemblies as follows (see Figure A):

— IEEE Std C37.20.1-1993, IEEE Standard for Metal-Enclosed Low-Voltage Power Circuit Breaker Switchgear
— IEEE Std C37.20.2-1999, IEEE Standard for Metal-Clad Switchgear
— IEEE Std C37.20.3-2001, IEEE Standard for Metal-Enclosed Interrupter Switchgear
— IEEE Std C37.20.4-2001, IEEE Standard for Indoor AC Switches Rated Above 1 kV through 38 kV for Use in Metal-Enclosed Switchgear[b]
— IEEE Std C37.20.6-1997, IEEE Standard for 4.76 to 38 kV Rated Grounding and Testing Devices Used in Enclosures
— IEEE Std C37.21-1985 (Reaff 1998), IEEE Standard for Control Switchboards
— IEEE Std C37.22-1997, American National Standard Preferred Ratings and Related Required Capabilities for Indoor AC Medium Voltage Switches Used in Metal-Enclosed Switchgear
— IEEE Std C37.23-1987 (Reaff 1991), IEEE Standard for Metal-Enclosed Bus and Calculating Losses in Isolated-Phase Bus

[a]Information on references can be found in Clause 2.

[b]This IEEE standards project was not approved by the IEEE-SA Standards Board at the time this publication went to press. For information about obtaining a draft, contact the IEEE.

Copyright © 2001 IEEE. All rights reserved.

Copyright The Institute of Electrical and Electronics Engineers, Inc.
Provided by IHS under license with IEEE
No reproduction or networking permitted without license from IHS
Not for Resale

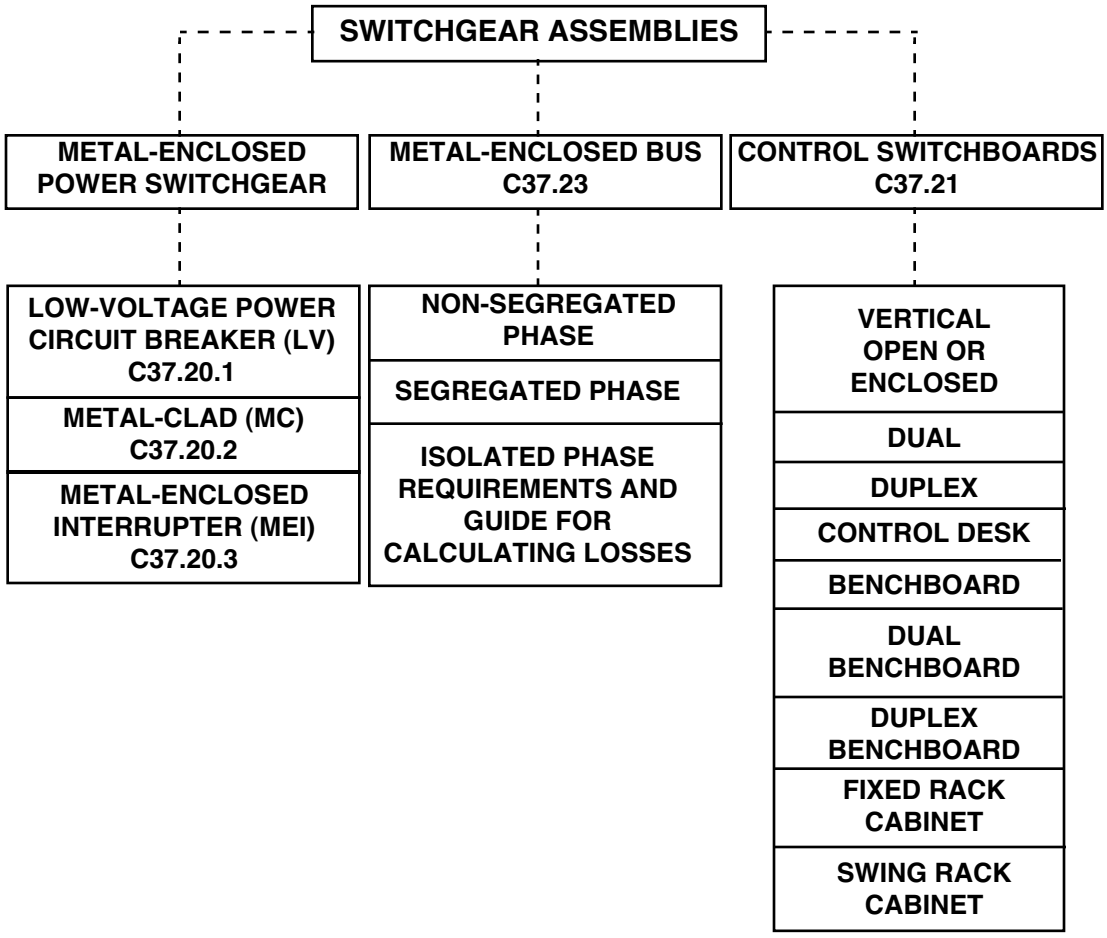

Figure A—Publications about switchgear assemblies

Through this joint effort over the many years, the switchgear assemblies standards have been extremely valuable to the industry. Further suggestions for improvement gained in the use of this standard are welcome.

The Switchgear Assemblies Working Group that prepared and approved this standard had the following personnel:

E. R. Byron, *Chair*

C. J. Ball
T. A. Burse
J. J. Dravis
J. M. Jerabek
W. E. Laubach
W. McCowan
P. J. Notarian
G. R. Nourse
T. W. Olsen
G. O. Perkins
R. J. Puckett
G. Sakats
S. H. Telander
M. Wactor

Copyright © 2001 IEEE. All rights reserved.

Copyright The Institute of Electrical and Electronics Engineers, Inc.
Provided by IHS under license with IEEE
No reproduction or networking permitted without license from IHS
Not for Resale

The Switchgear Assemblies Subcommittee of the IEEE Switchgear Committee that approved this standard had the following personnel:

T. Burse, *Chair*

C. J. Ball
W. Bradley
E. R. Byron
J. J. Dravis
D. Edwards
D. Gohil
R. Iyer
J. M. Jerabek
W. E. Laubach
D. J. Lemmerman
W. C. McKay
A. Morgan
P. J. Notarian
G. R. Nourse
T. W. Olsen
G. O. Perkins
E. Peters
R. J. Puckett
G. Sakats
J. C. Scott
S. H. Telander
M. Wactor

The following members of the balloting group voted on this standard. Balloters may have voted for approval, disapproval, or abstention.:

Richard H. Arndt
L. Ronald Beard
Harvey L. Bowles
Matthew Brown
John H. Brunke
Raymond L. Capra
Alexander Dixon
J. J. Dravis
Peter W. Dwyer
Ruben D. Garzon
David F. Gray
Kenneth Hendrix
Harold L. Hess
Jerry M. Jerabek
P. L. Kolarik
David G. Kumbera
Stephen R. Lambert
Donald M. Larson
Ward E. Laubach
John G. Leach
George N. Lester
L. V. McCall
William C. McKay
Georges F. Montillet
F. J. Muench
Raymond P. O'Leary
A. F. Parks
Gordon O. Perkins
R. Kris Ranjan
James C. Ransom
Jack E. Reed
David N. Reynolds
Hugh C. Ross
Tim E. Royster
Larry H. Schmidt
Curt A. Schwalbe
Devki Sharma
Guy St. Jean
David Swindler
Stan H. Telander
Frederick C. Teufel
Thomas J. Tobin
Charles L. Wagner

The Accredited Standards Committee (ASC) C37 that reviewed and approved this standard had the following personnel at the time of approval:

Eldridge R. Byron, *Chair*

Andrew K. McCabe, *Vice Chair, High-Voltage Standards*
J. C. Scott, *Vice Chair, Low-Voltage Standards*
David L. Swindler, *Vice Chair, IEC Activities*
Naeem Ahmad, *IEEE Co-Secretary*
Jean French, *NEMA Co-Secretary*

Organization Represented	*Name of Representative*
Association of Iron and Steel Engineers	(vacant)
Edison Electric Institute (EEI)	D. E. Galicia
	Joseph L. Koepfinger
	Gerald J. Martuscello
	Yasin Musa
	E. M. Worland *(Dele. Chair)*
Institute of Electrical and Electronics Engineers	Ted A. Burse
	Keith Gray *(Dele. Chair)*
	Alec C. Monroe
	R. J. Puckett
	T. E. Royster
	Ruben D. Garzon
	John Wood
International Electrical Testing Association (NETA)	A. Peterson
National Electric Contractors Association	Darrell Harwood
National Electrical Manufacturers Association	Gary T. Jones
	R. W. Long
	Ted Olsen
	G. Sakats *(Dele. Chair)*
	David L. Stone
	Eldridge Byron

Copyright © 2001 IEEE. All rights reserved.

Copyright The Institute of Electrical and Electronics Engineers, Inc.
Provided by IHS under license with IEEE
No reproduction or networking permitted without license from IHS
Not for Resale

Tennessee Valley Authority	J. Nelson
Testing Lab Group	Eric Roseen
	P. Notarian
US Department of Agriculture	Harvey Bowles
US Department of the Army, Office of the Chief of Engineers	John A. Gilson
US Department of the Navy, Naval Construction	Dwayne Mills
Western Area Power Administration	(vacant)

When the IEEE-SA Standards Board approved this standard on 17 March 2001, it had the following membership:

Donald N. Heirman, *Chair*
James T. Carlo, *Vice Chair*
Judith Gorman, *Secretary*

Chuck Adams	James H. Gurney	Paul J. Menchini
Mark D. Bowman	Raymond Hapeman	Daleep C. Mohla
Clyde R. Camp	Richard J. Holleman	Robert F. Munzner
Richard DeBlasio	Richard H. Hulett	Ronald C. Petersen
Harold E. Epstein	Lowell G. Johnson	Malcolm V. Thaden
H. Landis Floyd	Joseph L. Koepfinger*	Geoffrey O. Thompson
Jay Forster*	Peter H. Lips	Akio Tojo
Howard M. Frazier		Howard L. Wolfman

*Member Emeritus

Also included is the following nonvoting IEEE-SA Standards Board liaisons:

Satish K. Aggarwal, *NRC Representative*
Alan H. Cookson, *NIST Representative*
Donald R. Volzka, *TAB Representative*

Noelle D. Humenick
IEEE Standards Project Editor

National Electrical Safety Code and NESC are both registered trademarks and service marks of the Institute of Electrical and Electronics Engineers, Inc.

National Electrical Code and NEC are both registered trademarks of the National Fire Protection Association, Inc.

Copyright © 2001 IEEE. All rights reserved.

Copyright The Institute of Electrical and Electronics Engineers, Inc.
Provided by IHS under license with IEEE
No reproduction or networking permitted without license from IHS
Not for Resale

Contents

1. Scope 1

2. References 1

3. Definitions 3

3.1 Qualifying terms—switchgear 4
3.2 Qualifying terms—IEEE 100 4
3.3 Qualifying terms—IEEE Std C37.100-1992 4
3.4 Common or related terms 5
3.5 Definitions of terms 5

4. Service conditions 6

5. Ratings 7

5.1 General 7
5.2 Voltage and insulation levels 7
5.3 Rated power frequency 7
5.4 Rated current 8
5.5 Temperature limitations 9
5.6 Current transformer ratings 11

6. Tests 11

6.1 General 11
6.2 Design tests 12
6.3 Production tests 20
6.4 Conformance test 21
6.5 Field dielectric tests 21

7. Construction 22

7.1 Buses and primary connections 22
7.2 Grounding 22
7.3 Control and secondary circuits and devices 23
7.4 Miscellaneous 25
7.5 Materials and finish 26
7.6 Precautionary labels 27
7.7 Barriers 27
7.8 Shutters 27
7.9 Interlocks 27
7.10 Enclosure categories 27
7.11 Indoor MEI switchgear, access, and ventilation 27
7.12 Outdoor MEI switchgear, access, and ventilation 28

8. Application guide for MEI switchgear 28

8.1 Unusual service conditions 28
8.2 System characteristics—voltage and frequency 31
8.3 Overvoltage considerations—insulation levels 31

Copyright © 2001 IEEE. All rights reserved.

Copyright The Institute of Electrical and Electronics Engineers, Inc.
Provided by IHS under license with IEEE
No reproduction or networking permitted without license from IHS
Not for Resale

8.4 Continuous current rating and overload capability 31
8.5 Short-circuit considerations 32
8.6 Nuclear power plant application 32
8.7 Exposed circuits 32
8.8 Surge arresters in switchgear assemblies 32
8.9 Protection and isolation of switchgear connected to other switching equipment 32
8.10 Current transformer accuracies 32

9. Guide for handling, storage, and installation 33

9.1 Handling 33
9.2 Preoperation check 35
9.3 Interrupter switches 35
9.4 Interlocks 35
9.5 Energization 35

Annex A (informative) Guide for enclosure categories and related requirements 36

Copyright © 2001 IEEE. All rights reserved.

Copyright The Institute of Electrical and Electronics Engineers, Inc.
Provided by IHS under license with IEEE
No reproduction or networking permitted without license from IHS
Not for Resale

IEEE Standard for Metal-Enclosed Interrupter Switchgear

1. Scope

This standard covers metal-enclosed interrupter (MEI) switchgear assemblies containing, but not limited to, such devices as interrupter switches; selector switches; power fuses; control, instrumentation and metering devices; and protective equipment. It includes, but is not specifically limited to, equipment for the control and protection of apparatus used for distribution of electrical power.

This standard is concerned with enclosed (rather than open), indoor and outdoor switchgear assemblies rated above 1000 V. It includes equipment that is part of primary and secondary unit substations. It does not include gas-insulated substation equipment nor switching devices mounted integrally within a transformer enclosure.

2. References

This standard shall be used in conjunction with the following publications.

Accredited Standards Committee C2-1997, National Electrical Safety Cod® (NESC®)[1]

ANSI C37.06-2000, American National Standard for Switchgear—AC High-Voltage Circuit Breakers Rated on a Symmetrical Current Basis—Preferred Ratings and Related Required Capabilities[2].

ANSI C37.22-1997, American National Standard Preferred Ratings and Related Required Capabilities for Indoor AC Medium Voltage Switches Used in Metal-Enclosed Switchgear.

ANSI C37.47-1981 (R1988), American National Standard Specifications for Distribution Fuse Disconnecting Switches, Fuse Supports, and Current-Limiting Fuses.

[1]The NESC is available from the Institute of Electrical and Electronics Engineers, 445 Hoes Lane, P.O. Box 1331, Piscataway, NJ 08855-1331, USA.

[2]ANSI publications are available from the Sales Department, American National Standards Institute, 11 West 42nd Street, 13th Floor, New York, NY 10036, USA.

Copyright © 2001 IEEE. All rights reserved.

Copyright The Institute of Electrical and Electronics Engineers, Inc.
Provided by IHS under license with IEEE
No reproduction or networking permitted without license from IHS
Not for Resale

ANSI C37.57-1990, American National Standard for Switchgear—Metal-Enclosed Interrupter Switchgear Assemblies—Conformance Test Procedures.

ANSI C37.58-1990, American National Standard for Switchgear—Indoor AC Medium-Voltage Switches for Use in Metal-Enclosed Switchgear—Conformance Test Procedures.

ANSI Z535.4-1998, American National Standard for Product Safety Sign and Label.

ASTM B117-97, Standard Practice for Operating Salt Spray (Fog) Apparatus.[3]

ASTM D229-96, Standard Test Methods for Rigid Sheet and Plate Materials Used in Electrical Insulation.

ASTM D714-87 (2000), Standard Test Method for Evaluating Degree of Blistering of Paints.

ASTM D1535-97, Standard Practice of Specifying Color by the Munsell System.

ASTM D1654-92 (2000), Standard Test Method for Evaluation of Painted or Coated Specimens Subjected to Corrosive Environments.

ASTM D2303-97, Standard Test Methods for Liquid-Contaminant, Inclined-Plane Tracking and Erosion of Insulating Materials.

ASTM G21-96, Standard Practice for Determining Resistance of Synthetic Polymeric Materials to Fungi.

IEEE Std 1-1986 (Reaff 1992), IEEE Standard General Principles for Temperature Limits in the Rating of Electric Equipment and for the Evaluation of Electrical Insulation.[4]

IEEE Std 4-1978, IEEE Standard Techniques for High-Voltage Testing.

NOTE—The 1978 Standard is used instead of the current standard because of the need for several correction factors that were omitted in the revised document.

IEEE Std 141-1993, IEEE Recommended Practice for Electric Power Distribution for Industrial Plants (IEEE Red Book).

IEEE Std 142-1991, IEEE Recommended Practice for Grounding of Industrial and Commercial Power Systems (IEEE Green Book).

IEEE Std 241-1990, IEEE Recommended Practice for Electric Power Systems in Commercial Buildings (IEEE Gray Book).

IEEE Std 242-1986 (Reaff 1991), IEEE Recommended Practice for Protection and Coordination of Industrial and Commercial Power Systems (IEEE Buff Book).

IEEE Std 344-1987 (Reaff 1993), IEEE Recommended Practices for Seismic Qualification of Class 1E Equipment for Nuclear Power Generating Stations.

IEEE Std 446-1995 (Reaff 2000), IEEE Recommended Practice for Emergency and Standby Power Systems for Industrial and Commercial Applications (IEEE Orange Book).

---

[3]ASTM publications are available from the American Society for Testing and Materials, 100 Barr Harbor Drive, West Conshohocken, PA 19428-2959, USA.

[4]IEEE publications are available from the Institute of Electrical and Electronics Engineers, 445 Hoes Lane, P.O. Box 1331, Piscataway, NJ 08855-1331, USA (http://standards.ieee.org/).

Copyright © 2001 IEEE. All rights reserved.

Copyright The Institute of Electrical and Electronics Engineers, Inc.
Provided by IHS under license with IEEE
No reproduction or networking permitted without license from IHS
Not for Resale

IEEE Std C37.04-1999, IEEE Standard Rating Structure for AC High-Voltage Circuit Breakers Rated on a Symmetrical Current Basis.

IEEE Std C37.2-1996, IEEE Standard Electrical Power System Device Function Numbers and Contact Designations.[5]

IEEE PC37.20.4/D5a, IEEE Draft Standard for Indoor AC Switches Rated Above 1 kV Through 38 kV for Use in Metal-Enclosed Switchgear.[6]

IEEE Std C37.24-1986 (Reaff 1998), IEEE Guide for Evaluating the Effect of Solar Radiation on Outdoor Metal-Enclosed Switchgear.

IEEE Std C37.90.1-1989 (Reaff 1994), IEEE Standard Surge Withstand Capability (SWC) Tests for Protective Relays and Relay Systems.

IEEE Std C37.90.2-1995, IEEE Standard Withstand Capability of Relay Systems to Radiated Electromagnetic Interference from Transceivers.

IEEE Std C37.100-1992, IEEE Standard Definitions for Power Switchgear.

IEEE Std C57.13-1993, IEEE Standard Requirements for Instrument Transformers.

NEMA CC1-1993, Electric Power Connectors for Substations.[7]

NEMA WC5-1992, Thermoplastic-Insulated Wire and Cable for the Transmission and Distribution of Electrical Energy (ICEA S-61-402).

NEMA WC7-1998, Cross-Linked-Thermosetting-Polyethylene-Insulated Wire and Cable for the Transmission and Distribution of Electrical Energy (ICEA S-66-524).

NEMA LI1-1998, Industrial Laminating Thermosetting Products.

NFPA 70-1999, National Electrical Code® (NEC®).[8]

UL 486A-1997, Wire Connectors and Soldering Lugs for Use With Copper Conductors.[9]

3. Definitions

The definitions of terms contained in this standard, or in other standards referred to in this standard are not intended to embrace all legitimate meanings of the terms. They are applicable only to the subject treated in this standard.

---

[5]This publication is available from the Director, US Navy Publications and Printing Service, Eastern Division, 700 Robbins Ave., Philadelphia, PA 19111, USA.

[6]This IEEE standards project was not approved by the IEEE-SA Standards Board at the time this publication went to press. For information about obtaining a draft, contact the IEEE.

[7]NEMA publications are available from the National Electrical Manufacturers Association, 1300 N. 17th St., Ste. 1847, Rosslyn, VA 22209, USA.

[8]The NEC is available from Publications Sales, National Fire Protection Association, 1 Batterymarch Park, P.O. Box 9101, Quincy, MA 02269-9101, USA.

[9]UL publications are available from Underwriters Laboratories, Inc., 333 Pfingsten Road, Northbrook, IL 60062-2096, USA.

Copyright © 2001 IEEE. All rights reserved.

Copyright The Institute of Electrical and Electronics Engineers, Inc.
Provided by IHS under license with IEEE
No reproduction or networking permitted without license from IHS Not for Resale

If a term is not defined in this standard, the definition in IEEE Std C37.100-1992 applies. An asterisk (*) following a definition indicates that the definition in this standard is not contained in IEEE Std C37.100-1992 while a dagger (†) indicates the definition differs from that in IEEE Std C37.100-1992.

3.1 Qualifying terms—switchgear

3.1.1 switchgear: A general term covering switching and interrupting devices and their combination with associated control, instrumentation, metering, protective, and regulating devices and covering assemblies of these devices with associated interconnections, accessories, and supporting structures used primarily in connection with the generation, transmission, distribution, and conversion of electrical power.

3.1.2 switchgear assembly (see Figure A in the introduction)**:** An assembled equipment (indoor or outdoor) including, but not limited to, one or more of switching, interrupting, control, instrumentation, metering, protective, and regulating devices, together with their supporting structures, enclosures, conductors, electric interconnections, and accessories.

3.1.3 metal-enclosed power switchgear: A switchgear assembly completely enclosed on all sides and top with sheet metal (except for ventilating openings and inspection windows) containing primary power circuit switching or interrupting devices, or both, with buses and connections and possibly including control and auxiliary devices. Access to the interior of the enclosure is provided by doors or removable covers.†

3.1.4 metal-enclosed interrupter (MEI) switchgear: Metal-enclosed power switchgear including the following equipment as required:

a) Interrupter switches
b) Power fuses (current-limiting or noncurrent-limiting)
c) Bare bus and connections
d) Instrument transformers
e) Control wiring and accessory devices

The interrupter switches and power fuses may be stationary or removable (drawout). When removable, automatic shutters (that cover primary circuit elements when the removable element is in the disconnected, test, or removed position) and mechanical interlocks shall be provided for proper operating sequence.

3.2 Qualifying terms—IEEE 100

The following qualifying terms are defined in*The Authoritative Dictionary of IEEE Standards Terms,* Seventh Edition; and the user is referred to the definitions (relating to types of enclosures, ventilation methods, etc.) given in that dictionary:

3.2.1 accessible

3.2.2 enclosed

3.2.3 isolated

3.2.4 ventilated

3.3 Qualifying terms—IEEE Std C37.100-1992

The following qualifying terms are defined in IEEE Std C37.100-1992, and the user is referred to the definitions given in that dictionary:

3.3.1 enclosure

Copyright © 2001 IEEE. All rights reserved.
Copyright The Institute of Electrical and Electronics Engineers, Inc.
Provided by IHS under license with IEEE
No reproduction or networking permitted without license from IHS
Not for Resale

3.3.2 lame-resistant (retardant)

3.3.3 indoor

3.3.4 metal-enclosed

3.3.5 outdoor

3.3.6 resistant (suffix)

3.3.7 secondary

3.3.8 ventilated enclosure

3.4 Common or related terms

The following common or related terms are defined in IEEE Std C37.100-1992, and the user is referred to the definitions given in that dictionary:

3.4.1 asymmetrical

3.4.2 auxiliary switch

3.4.3 bus

3.4.4 connected position

3.4.5 continuous current tests

3.4.6 disconnected position

3.4.7 drawout-mounted device

3.4.8 ground bus

3.4.9 main (primary switchgear connections)

3.4.10 normal frequency

3.4.11 primary disconnecting devices

3.4.12 removable element

3.4.13 secondary and control wiring

3.4.14 silver surfaced

3.4.15 stationary mounted device

3.4.16 symmetrical

3.4.17 terminal

3.4.18 terminal block

3.4.19 test position

3.5 Definitions of terms

3.5.1 ambient air temperature: The temperature of the surrounding air that comes in contact with equipment.*

NOTE—Ambient air temperature, as applied to enclosed switchgear assemblies, is the average temperature of the surrounding air that comes in contact with the enclosure. See 6.2.2.3 for method of measurement.

Copyright © 2001 IEEE. All rights reserved.

Copyright The Institute of Electrical and Electronics Engineers, Inc.
Provided by IHS under license with IEEE
No reproduction or networking permitted without license from IHS
Not for Resale

3.5.2 design tests: Tests made by the manufacturer to determine the adequacy of the design of a particular type, style, or model of equipment or its component parts to meet its assigned ratings and to operate satisfactorily under normal service conditions or under special conditions if specified. Such tests may be used to demonstrate compliance with applicable standards of the industry.†

NOTES

1—Design tests are made on representative apparatus or prototypes to verify the validity of design analysis and calculation methods and to substantiate the ratings assigned to all other apparatus of basically the same design. These tests are not intended to be made on every design variation or to be used as part of normal production. The applicable portion of these design tests may also be used to evaluate modifications of a previous design and to ensure that performance has not been adversely affected. These data from previous similar designs may also be used for current designs, where appropriate. Once made, the tests need not be repeated unless the design is changed to modify performance.

2—Design tests are sometimes called type tests.

3.5.3 production tests: Tests made for quality control by the manufacturer on every device or representative samples, or on required parts or materials, to verify during production that the product meets the design specifications and applicable standards.†

NOTES

1—Certain quality assurance tests on identified critical parts of repetitive high-production devices may be tested on a planned statistical sampling basis.

2—Production tests are sometimes called routine tests.

3.5.4 conformance tests: Tests made to demonstrate compliance with the applicable standards. The test specimen is normally subjected to all planned production tests prior to initiation of the conformance test program.†

NOTE—The conformance tests may, or may not, be similar to certain design tests. Demonstration of margin (capabilities) beyond the standards is not required.

3.5.5 field tests (for switchgear): Tests made after the assembly has been installed at its place of utilization.†

3.5.6 switch compartment: The portion of the switchgear assembly that contains one switching device (such as an interrupter switch or power fuse interrupter switch combination) and the associated primary conductors.*

3.5.7 vertical section: The portion of the switchgear assembly between two successive vertical delineations. The vertical section may contain one or more switch compartments and associated primary conductors.*

4. Service conditions

Standards for the design and performance of MEI switchgear are based on usual service conditions as described in this clause. The selection of equipment for a particular application may be based on the construction and ratings as defined in this standard provided that the following usual service conditions exist:

a) The temperature of the cooling air (ambient air temperature) surrounding the enclosure of the MEI switchgear is within the limits of –30 ˚C and +40 ˚C.

b) The altitude of the installation does not exceed 1000 m (3300 ft).

c) The effect of solar radiation is not significant. (The principles stated in IEEE Std C37.24-1986 may be used for guidance.)

d) Unusual service conditions such as outlined in 8.1 do not prevail.

Copyright © 2001 IEEE. All rights reserved.
Copyright The Institute of Electrical and Electronics Engineers, Inc.
Provided by IHS under license with IEEE
No reproduction or networking permitted without license from IHS
Not for Resale

5. Ratings

5.1 General

The ratings of a switchgear assembly are designations of operating limits under specific conditions of ambient temperature, temperature rise, etc. Where the switchgear assembly comprises a combination of primary and secondary circuits, each may be given ratings.

MEI switchgear having primary circuits shall have the following ratings:

a) Rated maximum voltage
b) Rated power frequency
c) Rated insulation levels
d) Rated continuous current
e) Rated short-time withstand current
f) Rated short-time withstand current duration (when other than 2 s)
g) Rated momentary withstand current

The designated ratings listed in ANSI C37.22-1987 and this standard are preferred, but are not considered to be restrictive.

In addition to these ratings, MEI switchgear may have interrupting or switching capability, which is determined by the rating of the particular interrupting and switching devices that are integral parts of the switchgear assembly. Refer to specific standards for the ratings of these devices: IEEE Std C37.04-1999 (circuit breakers); IEEE PC37.20.4/D5a (interrupter switches); and ANSI C37.47-1981 (fuses).

5.2 Voltage and insulation levels

The preferred rated maximum voltages and corresponding insulation levels for MEI switchgear are listed in Table 1.

5.2.1 Rated maximum voltage

The rated maximum voltage of MEI switchgear is the highest root-mean-square (rms) voltage for which the equipment is designed and is the upper limit for operation.

5.2.2 Rated insulation levels

The rated insulation levels of MEI switchgear assembly shall consist of the following two items:

a) Power-frequency withstand voltage
b) Lightning-impulse withstand voltage

5.3 Rated power frequency

The rated power frequency of a device or an assembly is the frequency of the circuit for which it is designed. (Ratings are based on a frequency of 60 Hz.)

Copyright © 2001 IEEE. All rights reserved.

Copyright The Institute of Electrical and Electronics Engineers, Inc.
Provided by IHS under license with IEEE
No reproduction or networking permitted without license from IHS
Not for Resale

Table 1—Voltage and insulation levels MEI switchgear

Rated maximum voltage (kV)	Power-frequency withstand (rms) (kV)	Impulse withstand (kV)	Reference dc withstand[a] (kV)
4.76	19	60	27
8.25	36	95	50
15.0	36	95	50
27.0	60	125	[b]
38.0	80	150	[b]

NOTE—For field test values, see 6.5.

[a]The column head "dc withstand" is given as a reference only for using dc test to verify the integrity of connected cable installations without disconnecting the cables from the switchgear. It represents values believed to be appropriate and approximately equivalent to the corresponding power frequency withstand test values specified for each voltage rating of switchgear. The presence of this column in no way implies any requirement for a dc withstand test on ac equipment or that a dc withstand test represents an acceptable alternate to the power frequency withstand test specified in this standard, either for design test, production test, conformance test, or field test. When making dc tests, the voltage should be raised to the test value in discrete steps and held for 1 min.

[b]Because of the variable voltage distribution encountered when making dc withstand tests, the manufacturer should be contacted for recommendations before applying dc withstand to switchgear. Voltage transformers above 34.5 kV should be disconnected when testing with dc. See IEEE Std C57.13-1993, Clause 8 and in particular 8.8.2, which reads, "Periodic kenotron test should not be applied to transformers of higher than 34.5 kV rating."

5.4 Rated current

5.4.1 Rated continuous current

The rated continuous current of MEI switchgear is the maximum current in rms amperes at rated frequency, which can be carried continuously by the primary circuit components, including buses and connections, without causing temperature rises in excess of specified limits for

a) Any primary or secondary circuit component
b) Any insulating medium, or structural or enclosing member

The specified temperature limits applicable to switchgear assemblies are given in 5.5.1 through 5.5.6.

5.4.2 Continuous current ratings

The preferred continuous current ratings of the main bus in MEI switchgear shall be 600 A, 1200 A, and 2000 A.

The continuous current rating of the individual switch compartments shall be equal to the ratings of the switching and interrupting devices used, except as may be modified by lower continuous current ratings for current transformers, power fuses, etc.

5.4.3 Rated momentary withstand current

The rated momentary withstand current of MEI switchgear is the maximum rms total current that it shall be required to withstand. The current shall be the rms value, including the dc component, at the major peak of the maximum cycle as determined from the envelope of the current wave of the maximum offset phase during a test period of at least 10 cycles. The symmetrical current shall be the rated short-time current, and the peak current value shall be 2.6 times its rated short-time current at the major peak of the maximum cycle. (This is also referred to as the peak withstand current.)

Copyright © 2001 IEEE. All rights reserved.
Copyright The Institute of Electrical and Electronics Engineers, Inc.
Provided by IHS under license with IEEE
No reproduction or networking permitted without license from IHS
Not for Resale

5.4.4 Momentary withstand current ratings

The momentary withstand current ratings of the individual switch compartments of MEI switchgear shall be equal to one of the following:

a) The momentary withstand rating of the switching device,
b) The fault-making rating of the switching device, or
c) The total asymmetrical short-circuit current ratings of the switching devices used.

NOTE—Instead of a rated momentary withstand current (rms asymmetrical current), some devices have a rated peak withstand current. In this standard, the rated momentary withstand current requires a 10-cycle current duration with a designated peak value. In other standards, the peak withstand current may be different. When applying devices having a rated peak withstand current, the user or manufacturer shall convert the peak rating to asymmetrical current to determine whether the application is appropriate.

5.4.5 Rated short-time withstand current

The rated short-time withstand current of the MEI switchgear assembly is the maximum rms symmetrical current that the bus and connections shall be required to carry for 2 s. The period for the MEI switchgear assembly may be limited to a shorter time by a protective device, switch, or current transformer rating, but shall not reduce the requirement for the bus and connections.

NOTES

1—This rated time of 2 s is based on the maximum permissible "Y" tripping time delay for indoor circuit breakers. Refer to IEEE Std C37.04-1999, subclause 5.8.2.3.b.

2—Short-time current is the momentary withstand (rms asymmetrical) current divided by 1.55.

5.4.5.1 Rated short-time withstand current duration

The rated short-time withstand current duration is the maximum time interval that the assembly shall be required to carry the rated short-time withstand current.

When the short-time withstand current duration rating of the load interrupter switch is less than the preferred rating of 2 s, then the MEI switchgear assembly shall be assigned a rated short-time withstand current duration rating equal to the rating of the switch and the rating shall be noted on the nameplate.

5.4.5.2 Short-time withstand current rating

The short-time withstand current ratings of the individual switch compartments of the MEI switchgear shall be equal to the short-time withstand ratings of the switching and protective devices used or the short-time rating of the current transformer (see IEEE Std C57.13-1993 and IEEE Std C37.20.4-2001).

5.5 Temperature limitations

5.5.1 Limiting temperature

The limiting temperature for MEI switchgear is the maximum temperature permitted as follows:

a) For any component, such as insulation, buses, instrument transformers, and switching and interrupting devices
b) For air in cable termination compartments
c) For any noncurrent-carrying structural parts
d) For air surrounding devices

Copyright © 2001 IEEE. All rights reserved.

Copyright The Institute of Electrical and Electronics Engineers, Inc.
Provided by IHS under license with IEEE
No reproduction or networking permitted without license from IHS
Not for Resale

5.5.2 Temperature limits for insulating materials

The total temperature to which insulating materials are subjected shall not exceed the values listed in Table 2 for the various classes of insulating materials.

Table 2—Temperature limits for insulating materials as used in switchgear assemblies

Class of insulating material	Limit of hottest-spot temperature rise (˚C)	Limit of hottest-spot total temperature (˚C)
Class 90	50	90
Class 105	65	105
Class 130	90	130
Class 155	115	155
Class 180	140	180
Class 220	180	220

NOTE—For additional information on temperature limits, see IEEE Std 1-1986.

5.5.3 Temperature limits for buses and connections

The total temperature of buses and connections shall not exceed the values listed in Table 3.

Table 3—Temperature limits for buses and connections as used in switchgear assemblies

Type of bus or connection	Limit of hottest-spot temperature rise (˚C)	Limit of hottest-spot total temperature (˚C)
Buses and connections with unplated copper to copper connecting joints	30	70
Buses and bus connections, silver-surfaced, tin-surfaced, or equivalent connecting joints	65	105
Connections to insulated cables (unplated copper to copper)	30	70
Connections to insulated cables (silver-surfaced, tin-surfaced, or equivalent)	45	85

NOTES

1—All aluminum bus shall be silver-surfaced, tin-surfaced, or equivalent connecting joints.

2—Temperature limits for connecting joints do not apply to brazed or welded connections. Welded or brazed connections are not considered joints.

5.5.4 Temperature limitations for air surrounding devices within an enclosed assembly

The temperature of the air surrounding all devices within an enclosed switchgear assembly, considered in conjunction with their rating and loading as used, shall not cause these devices to operate outside their rated temperature range when the ambient air temperature is within the range of –30 ˚C to +40 ˚C.

5.5.5 Temperature limitations for air surrounding insulated power cables

The temperature of the air surrounding insulated power cables within any compartment of an enclosed assembly shall not exceed 65 ˚C when the assembly is

--`,,`-`-`,,`,,`,`,,`---
Copyright © 2001 IEEE. All rights reserved.
Copyright The Institute of Electrical and Electronics Engineers, Inc.
Provided by IHS under license with IEEE
No reproduction or networking permitted without license from IHS
Not for Resale

a) Equipped with devices having maximum current rating for which the assembly is designed
b) Carrying rated continuous current at rated voltage and at rated frequency
c) In an ambient air temperature of 40 ˚C

NOTE—This temperature limitation is based on the use of 90 ˚C insulated power cables. Use of lower-temperature-rated cables requires special consideration.

5.5.6 Temperature limitations for parts subject to contact by personnel

a) Parts handled by the operator in the normal course of duties shall have no higher total temperature than 50 ˚C.
b) External surfaces accessible to an operator in the normal course of duties shall have no higher total temperature than 70 ˚C.
c) External surfaces not accessible to an operator in the normal course of duties shall have no higher total temperature than 110 ˚C.

5.6 Current transformer ratings

5.6.1 Current transformer mechanical ratings

The mechanical ratings of current transformers shall successfully withstand the momentary withstand current for which the associated circuit interrupting devices are applied. When the primary circuit is protected by fuses, the current transformers shall successfully withstand the maximum let-through current of the fuses. Unless specifically limited to a shorter time by the associated protective equipment, the duration of the short-circuit current shall be considered as 10 cycles. (See IEEE Std C57.13-1993 for short-time mechanical current ratings.)

5.6.2 Current transformer thermal ratings

The thermal ratings of current transformers shall successfully withstand the short-circuit current for which the associated circuit interrupting devices are applied. When the primary circuit is protected by fuses, the current transformers shall successfully withstand the maximum I^2t of the fuses. Unless specifically limited to a shorter time by the associated protective equipment, the duration of the short circuit shall be considered as 1 s. (See IEEE Std C57.13-1993 for short-time thermal current ratings.)

5.6.3 Current transformer ambient temperature

Current transformers for use in switchgear assemblies shall be rated on the basis of at least 55 ˚C ambient temperature in accordance with IEEE Std C57.13-1993, 4.1.1.2.

6. Tests

6.1 General

This clause establishes physical and electrical conditions for tests and methods of determining temperatures and test values. All apparatus and devices in the power circuit shall be mounted in their normal locations during tests. No statement in this clause is to be construed as modifying the test requirements for devices included in switchgear assemblies. Tests are classified as design tests, production tests, conformance tests, and field tests (see Clause 3).

Copyright © 2001 IEEE. All rights reserved.

Copyright The Institute of Electrical and Electronics Engineers, Inc.
Provided by IHS under license with IEEE
No reproduction or networking permitted without license from IHS
Not for Resale

NOTE—Except for the main switching or interrupting device, other devices (such as voltage transformers, which are mounted in the switchgear assemblies) may be disconnected during the dielectric test. Such devices are individually tested in accordance with standards applying to them.

6.2 Design tests

Design tests as applicable shall be made in accordance with 6.2.1 through 6.2.9.

6.2.1 Dielectric tests

Rated power-frequency withstand tests (see 6.2.1.1) and lightning-impulse withstand tests (see 6.2.1.2) shall be performed on MEI switchgear to demonstrate the ability of the insulation system to withstand voltages in accordance with Table 1. The tests on the insulation system shall be made under the temperature and humidity conditions normally obtained under conditions of commercial testing with appropriate correction factors applied as outlined in IEEE Std 4-1978. Humidity correction factors shall be based on the curves for rod gaps as stated in IEEE Std 4-1978. The equipment shall be clean and in good condition. Test voltages shall be applied between the primary circuits and ground in the following manner:

a) For equipment with stationary mounted devices and for equipment with drawout devices with the removable elements in the connected position
   1) With the switching device contacts closed, between each phase of the switchgear assembly individually with the frame and all other phases grounded.
   2) With the switching device contacts open, between each terminal of the switchgear assembly with the frame and all other terminals grounded.

b) For equipment with drawout devices with removable elements in the test position and the main switching devices in the closed position, apply the test voltage to primary circuits
   1) Simultaneously to all the incoming terminals of the switchgear assembly with the frame and outgoing terminals grounded. Repeat tests to the outgoing terminals with the frame and incoming terminals grounded.
   2) Simultaneously between all incoming and outgoing terminals of the switchgear assembly. The test shall be made with a value of voltage 10% higher than the voltage specified in Table 1.

c) For stationary mounted switches, with the switch in the open position, apply test voltage that is 10% higher than the voltage specified in Table 1
   1) First to all incoming terminals with all outgoing terminals grounded.
   2) Then to all outgoing terminals with all incoming terminals grounded.

NOTES

1—For the test across the open gap at 10% higher voltage, an intermediate point of the voltage source may, if practicable, be connected to ground and to the frame of the assembly in order that the voltage between any live part and the frame will not exceed the voltage specified in Table 1. If this is not practicable, the frame may be insulated from ground.

2—Successful completion of these tests does not necessarily provide assurance that with the switch in the test or open position, or both, it will always flashover to ground instead of across the gap between line and load terminals. Switchgear insulation does not provide surge protection for the open gap. Where surge protection of the gap is required, suitable protective devices shall be applied.

Power-frequency withstand tests, lightning-impulse withstand tests, and, where applicable, wet tests on entrance bushings shall be made in accordance with 6.2.1.1 through 6.2.1.3.

6.2.1.1 Power-frequency withstand tests

AC voltage shall have a crest value equal to 1.414 times the rms value specified in Table 1. The wave shape shall be essentially sinusoidal. The test frequency shall be within ±20% of the rated power frequency. The

Copyright © 2001 IEEE. All rights reserved.
Copyright The Institute of Electrical and Electronics Engineers, Inc.
Provided by IHS under license with IEEE
No reproduction or networking permitted without license from IHS Not for Resale

test potential shall be increased gradually from zero to reach the required test value within 30 s and 60 s and shall be held at that value for 1 min.

6.2.1.2 Lightning-impulse withstand tests

The standard impulse is a full impulse having a virtual front time of 1.2 μs and a virtual time to half value of 50 μs of the value specified in Table 1. It is described as a 1.2/50 μs impulse. In these tests, three positive and three negative impulse voltages shall be applied to each point without causing damage or flashover. If flashover occurs on only one test during any group of three consecutive tests, nine more tests shall be made. If equipment successfully withstands all three of the second group of tests, the flashover in the first group shall be considered as a random flashover and the equipment shall be considered as having successfully passed the tests. The wave shape, used to define the limits, is described in IEEE Std 4-1978.

NOTE—Some insulating materials retain a charge after an impulse test, and for these cases care should be taken when reversing the polarity. To allow the discharge of insulating materials, the use of appropriate methods, such as the application of impulses of the reverse polarity at lower voltage before the tests, is recommended.

6.2.1.3 Wet tests on entrance bushings

The tests shall be conducted in accordance with IEEE Std 4-1978.

6.2.2 Continuous current tests

To determine compliance with continuous current ratings, it is necessary to determine that temperatures of the various components of the switchgear assembly are within the limits set forth in 5.5.1 through 5.5.6.

Temperature measurements shall be made in accordance with 6.2.2.1 through 6.2.2.7.

6.2.2.1 Test area conditions

Temperature tests shall be conducted indoors in a test area that is reasonably free from drafts.

6.2.2.2 Ambient air temperature limits

Tests may be made at any ambient air temperature between 10 ˚C and 40 ˚C.

6.2.2.3 Measurement of ambient air temperature

Indoor ambient air temperature shall be determined by taking the average of the readings of three temperature-measuring devices, such as thermometers or thermocouples, placed as follows:

a) One level with the top of the structure
b) One 305 mm above the bottom of the structure
c) One midway between the a) and b) positions

All temperature-measuring devices shall be placed 305 mm (12 in) from the structure, not in front of ventilators, and in locations unaffected by drafts caused by the structure or appreciable radiation from the equipment. When the ambient air temperature is subject to variations that might result in errors in measuring the temperature rise, the temperature-measuring devices should be immersed in a suitable liquid, such as oil, in a suitable container or reliably attached to a suitable mass of metal.

NOTE—A convenient form for such a container consists of a metal cylinder with a hole drilled partly through it. This cylinder is filled with liquid, and the temperature-measuring device is placed in it. The size of the container shall be at least 25 mm (1 in) in diameter and 50 mm (2 in) in height.

Copyright © 2001 IEEE. All rights reserved.

Copyright The Institute of Electrical and Electronics Engineers, Inc.
Provided by IHS under license with IEEE
No reproduction or networking permitted without license from IHS Not for Resale

6.2.2.4 Method of measuring temperature

Thermocouples shall be used to measure the temperature at the required locations on the switchgear assembly test arrangement. The thermocouples, when used for measuring the temperature of insulation, shall be located on the current-carrying member or other metal part. Thermocouples used for measuring the temperature of the drawout switch separable primary contacts shall be located approximately 13 mm (1/2 in) from the contacts on the current-carrying member. For cable terminations, the thermocouples shall be located at the junction of the conductor and its insulation.

Thermocouples shall be held in intimate contact with the conductor surface by such methods as welding, drilling, and peening, or cementing. The thermocouples on a design test shall be located so they measure the hottest spot, even though such placement may involve drilling holes that destroy some parts. Thermocouples cannot be located in the actual contact point of line or point contacts without destroying the effectiveness of such line or point contacts.

Measurements shall be made at junction points of insulation and conducting parts to ensure against exceeding temperature limits of the insulation.

6.2.2.5 Duration of tests

The continuous current test shall be made for such a period of time that the temperature rise of any monitored point in the assembly has not increased by more than 1 ˚C over 1 hour period, with readings taken at not greater than 30 min intervals. The equipment is considered to have passed the test if the temperature limits in Table 2 and Table 3 have not been exceeded in any of the three readings over the hour.

6.2.2.6 Frequency of test current

The frequency of the test current shall not be less than the rated frequency of the assembly tested.

A sinusoidal-wave shape is recommended. The test shall be made with alternating current having a crest value equal to 1.414 times the rms test current.

6.2.2.7 Copper conductors for use in continuous current tests

Bus bars or cables as specified in Table 4 shall be utilized for connection to the load-side of the interrupter switch or fuse terminals and the main bus. If test arrangement internal bus sizes are different from Table 4, then external bus-bar sizes or configurations equal to the internal bus bars may be substituted at the option of the manufacturer. The conductors shall have a minimum external length of 1.2 m (4 ft).

Table 4—Copper conductors size for use in continuous current tests

Interrupter switch or device rating (A)	Quantity	Bus per terminal[a]	Cable size[b]
200	1	3.2 mm × 25 mm (1/8 × 1 in)	One 2/0 AWG cable
600	1	6.4 mm × 51 mm (1/4 × 2 in)	Two 350 kc mil cable
1200	1	6.4mm × 102 mm (1/4 × 4 in)	Four 500 kc mil cable
2000	2	9.5 mm × 101.6 mm (3/8 × 4 in)	—

[a]Where multiple bars are used, they shall be spaced 9.5 mm (3/8 in) apart. Vertical or horizontal configuration shall be at the option of the manufacturer.
[b]Tests based on cross-sectional area, not cable insulation classification.

Copyright © 2001 IEEE. All rights reserved.
Copyright The Institute of Electrical and Electronics Engineers, Inc.
Provided by IHS under license with IEEE
No reproduction or networking permitted without license from IHS
Not for Resale

6.2.3 Short-time withstand current tests

Short-time withstand current tests shall be made to demonstrate the electrical adequacy of buses and connections in MEI switchgear to carry the rated short-time withstand current for 2 s without physical damage.

The test may be at any convenient value of voltage. If the test circuit meets the requirements of 6.2.4, this test may be combined with the momentary withstand current test.

The ground bus shall be capable of carrying the rated short-time withstand current of the MEI switchgear for 2 s and shall be tested single phase.

6.2.4 Momentary withstand current tests

Three-phase momentary withstand current tests shall be made to demonstrate the mechanical adequacy of the structures, buses, and connections in MEI switchgear to withstand the rated momentary withstand current of the assembly with no breakage of insulation and

a) The bus bar should not incur any permanent deformation, or
b) If any deformation of the bus bar(s) has occurred, such deformation should not prevent the dielectric test requirements from being met.

The current shall be the rms value, including the dc component during the maximum cycle as determined from the envelope of the current wave during a test period of at least 10 cycles unless limited to a shorter time by the protective device. The test current shall have peak and rms total values of no less than those specified in 5.4.3.

The ground bus shall be capable of carrying the rated momentary withstand current of the MEI switchgear for 10 cycles and shall be tested single phase.

NOTES

1—The tests conducted in 6.2.3 and 6.2.4 are to demonstrate the mechanical and thermal capability of the main bus and main bus connections. Connections on the outgoing terminals of protective devices may be limited to a shorter time and let-through current by the protective devices.

2—The momentary test requires only a peak and rms total value although the momentary withstand current is defined using the rated short-time withstand current. The test may be at any convenient value of voltage; therefore, any X/R ratio for the testing circuit may be used.

6.2.5 Mechanical endurance tests

Mechanical endurance tests shall be performed as in 6.2.5.1 and 6.2.5.2.

6.2.5.1 Stationary switches

At least 50 mechanical close-open operation tests shall be performed, using each frame size and type of switch to demonstrate proper sequential operation and to establish the satisfactory function of the following elements:

a) Stored energy mechanism interlocks, as applicable
b) Door, key, and other interlocks, as applicable

All primary power should be disconnected during these mechanical tests.

Copyright © 2001 IEEE. All rights reserved.

Copyright The Institute of Electrical and Electronics Engineers, Inc.
Provided by IHS under license with IEEE
No reproduction or networking permitted without license from IHS
Not for Resale

6.2.5.2 Drawout switches

At least 50 mechanical endurance test cycles between disconnected and connected positions shall be prepared, using each frame size and type of switch to demonstrate proper sequential operation and to establish the satisfactory function of the following elements:

a) Separable primary contacts
b) Separable control contacts, as applicable
c) Interrupter switch removable element position interlocks (every fifth operation)
d) Stored energy mechanism interlocks, as applicable
e) Housing mounted position switches
f) Shutters

All primary power should be disconnected during these mechanical tests.

6.2.6 Sheet, molded, or cast insulating materials for support of primary buses and connections

Sheet, molded, or cast insulating materials used for the support of the primary conductors shall be tested for flame resistance and tracking resistance as in 6.2.6.1 and 6.2.6.2.

NOTE—While these insulation flame-resistance and tracking-resistance tests are not tests applied to assembled switchgear, they are included in this standard because of the wide variety of insulating materials used in switchgear assemblies and because of the relative importance of these properties. The only intent in this subclause is that such insulating materials shall meet the requirements of the specified test procedures. When the insulation design utilized includes cut edges in the tracking path, these edges shall not degrade the tracking resistance below what is required by this standard.

6.2.6.1 Flame-resistance tests

Sheet, molded, or cast primary insulating materials used in switchgear assembly shall have a minimum average ignition time of 60 s and a maximum burning time of 100 s when tested in accordance with ASTM D229-96, Method II.

6.2.6.2 Tracking-resistance tests

Tracking resistance tests are required as follows:

a) *Switchgear assemblies of rated maximum voltage of 4.76 kV and less*. The material shall be tested in accordance with ASTM D2303-97. Under Condition A (see NEMA LI1-1989, 7.6) with specimens of 6.4 mm thickness, the material shall have a minimum time to track to the 25 mm mark of 20 min with 2500 V applied.
b) *Switchgear assemblies of rated maximum voltage of 8.25 kV and greater*. The material shall be tested in accordance with ASTM D2303-97. Under Condition A (see NEMA LI1-1989, 7.6) with specimens of 6.4 mm thickness, the material shall have a minimum time to track to the 25 mm mark of 300 min with 2500 V applied.

6.2.7 Bus-bar insulation

If insulation is provided for bus bars, it shall be tested for dielectric strength and flame resistance as in 6.2.7.1 and 6.2.7.2.

Copyright © 2001 IEEE. All rights reserved.
Copyright The Institute of Electrical and Electronics Engineers, Inc.
Provided by IHS under license with IEEE
No reproduction or networking permitted without license from IHS
Not for Resale

6.2.7.1 Test for bus-bar insulation

The insulated bus-bar sample shall have a power-frequency voltage applied from the conductor to an electrode effectively covering the outer surface of the insulation. The ac test voltage shall have a value not less than the appropriate rated maximum voltage as shown in Table 1. The ac test voltage shall have a crest value equal to 1.414 times the rms value, and the wave shape shall be essentially sinusoidal. The test voltage shall be applied for 1 min. The bus-bar sample shall have construction that is typical of bus bars, elbows, and joints.

NOTES

1—Suggested external electrodes are conductive paint or lead foil.

2—This test is required on only one insulated bus-bar test sample for each rated voltage.

6.2.7.2 Flame-resistance tests for applied insulation

Applied insulation, such as fluidized bed systems, tape systems, and shrinkable-type tubing shall be tested as in 6.2.7.2.1 through 6.2.7.2.3.

6.2.7.2.1 Test apparatus

The test apparatus (see Figure 1) shall consist of

a) A test chamber of sheet metal 30 cm (12 in) wide, 36 cm (14 in) deep, and 61 cm (24 in) high, which is open at the top and provided with a means for clamping the test specimen at the upper end and supporting it in a vertical position.

b) A means for adjusting the position of the test specimen.

c) A Tirrill burner with an attached pilot and mounted on a 20˚ angle block. The burner shall have a nominal bore of 9.5 mm (.375 in) and a length of approximately 10 cm (14 in) above the primary air inlets.

d) An adjustable steel angle (fixture) attached to the bottom of the chamber to ensure the correct location of the burner with relation to the test specimen.

e) A supply of ordinary illuminating gas or equivalent at supply pressure.

f) A timer.

g) Flame indicators consisting of strips of gummed Kraft paper having a nominal thickness of 0.13 mm (0.005 in) and a width of 13 mm (0.5 in).

Copyright © 2001 IEEE. All rights reserved.

Copyright The Institute of Electrical and Electronics Engineers, Inc.
Provided by IHS under license with IEEE
No reproduction or networking permitted without license from IHS
Not for Resale

NOTE—The paper used for the indicators is known to the trade as Grade B stock and is material such as covering tape, paper, or gummed Kraft paper.

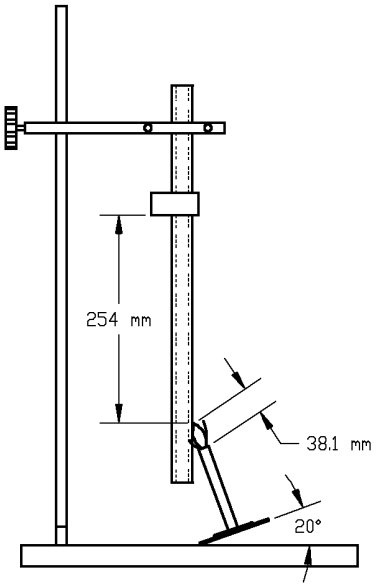

Figure 1—Test apparatus (Tirrill burner)

6.2.7.2.2 Preparation of sample

A copper rod approximately 19 mm (0.75 in) in diameter and 56 cm (22 in) in length shall be prepared with the necessary covering to be tested to a thickness of approximately 1.5 mm–3.2 mm (60 mil–125 mil).

6.2.7.2.3 Procedure

The test shall be made in a room that is reasonably free from drafts of air, although a ventilated hood may be used if air current does not affect the flame. One end of the test specimen approximately 56 cm (22 in) in length shall be clamped in position at the upper end of the chamber. A paper indicator shall be applied to the specimen so that the lower edge is 25 cm (10 in) above the point at which the inner blue cone of the test flame is to be applied. The indicator shall be wrapped once around the specimen, with the gummed side toward the conductor.

The ends shall be pasted evenly together and shall project 19 mm (0.75 in) from the specimen on the opposite side of the specimen to which the flame is to be applied. The paper tab shall be moistened only to the extent necessary to permit proper adhesion. The height of the flame with the burner vertical shall be adjusted to 13 cm (5 in) , with an inner blue cone 4 cm (1.5 in) high.

The burner, with only the pilot lighted, shall be placed in front of the sample so that the vertical plane through the stem of the burner includes the axis of the specimen. The angle block shall rest against the jig, which shall be adjusted so that, along the axis of the burner stem, a distance of 4 cm (1.5 in) separates the tip of the stem and the surface of the specimen. The valve supplying the gas to the burner proper shall then be opened, and the flame automatically applied to the sample. This valve shall be held open for 15 s and then closed for 15 s. This process shall be repeated four times. During each application of the flame, the specimen shall be adjusted if necessary, so that the top of the inner blue cone touches the surface of the specimen. If more than 25% of the extended portion of the indicator is burned after the five applications of the flame, the specimen is considered to have conveyed flame. The duration of burning of the specimen after the fifth application of the flame shall be noted, and any specimen that continues to burn for more than 1 min shall be considered to have failed this test.

Copyright © 2001 IEEE. All rights reserved.
Copyright The Institute of Electrical and Electronics Engineers, Inc.
Provided by IHS under license with IEEE
No reproduction or networking permitted without license from IHS
Not for Resale

6.2.8 Paint qualification test

The paint qualification test applies to all enclosures incorporating external ferrous parts. Nonferrous enclosures with no external ferrous parts need not be tested.

The paint qualification test shall be performed to ensure the adequacy of finishes to inhibit the buildup of rust on ferrous metal materials used for enclosures.

The methods used are given in 6.2.8.1 through 6.2.8.7.

6.2.8.1 Test specimens

Representative test panels of a 7.6 cm × 15 cm (3 in × 6 in) minimum size that can be accommodated by the test chamber shall be provided. Each specimen shall be uniformly processed in the standard production paint-finishing system. At least four panels shall be selected for the test. All the test specimens shall be of standard gauge ferrous metal equivalent to that used for the enclosure. The specimen shall be allowed to age for a minimum of seven days before being tested.

6.2.8.2 Test apparatus

The test apparatus shall consist of a fog chamber, salt solution reservoir, compressed-air supply, provisions for heating, and means of control. The conditions in the salt spray chamber (including the positioning of the specimens, content of the salt solution, and temperature and pressure to be maintained) shall be as defined in ASTM B117-97.

6.2.8.3 Preparation of test specimens

Two of the test panels shall be suitably scribed for testing in accordance with ASTM D1654-92.

6.2.8.4 Exposure of test specimens

All test specimens shall be tested in the salt spray chamber for a period of 200 h continuously except for the short daily interruptions necessary to inspect the test specimen or replenish the solution in the reservoir.

6.2.8.5 Procedure

After completion of the exposure period, the scribed specimens shall be processed in accordance with ASTM D1654-92, either Method A (tape) or Method B (scraper).

6.2.8.6 Evaluation

The scribed specimens shall then be evaluated for creepage from the scribe mark in accordance with ASTM D1654-92, Rating Schedule #1. The nonscribed specimen shall be evaluated for degree of blistering in accordance with ASTM D714-87.

6.2.8.7 Performance

The scribed specimens shall be judged to have met the requirements of the test if their rating number is 5 or higher as determined by ASTM D1654-92. The nonscribed specimens shall be judged to have met the requirements of the test if their blistering size is No. 6 or higher and if their frequency designation is F or M as determined by ASTM D714-87.

Copyright © 2001 IEEE. All rights reserved.

Copyright The Institute of Electrical and Electronics Engineers, Inc.
Provided by IHS under license with IEEE
No reproduction or networking permitted without license from IHS
Not for Resale

6.2.9 Rain test for outdoor MEI switchgear

The enclosure to be tested shall be fully equipped and complete with all appurtenances, such as roof bushings, and placed in the area to be supplied with artificial precipitation. For multiple unit construction, a minimum of two units shall be used to test the joints between units. A roof joint shall be included. The artificial precipitation shall be supplied by a sufficient number of nozzles to produce a uniform spray over the entire surface or surfaces under test. The various vertical surfaces of an enclosure may be tested separately or collectively, provided that a uniform spray is simultaneously applied to both of the following:

— The roof surface, from nozzles located at a suitable height
— The floor outside the enclosure for a distance of approximately 0.9 m (3 ft) in front of the surface under the test with the enclosure located at floor level

The nozzles used for this test shall deliver a square-shaped spray pattern with uniform spray distribution and shall have a capacity of at least 0.45 L/s (7.1 gal/min) at a pressure of 4.1×10^5 Pa (60 lbf/in^2) and a spray angle of approximately 75°. The centerline of the nozzles shall be inclined downward so that the top of the spray is horizontal as it is directed toward the vertical and roof surfaces being tested.

The pressure at the nozzles shall be a minimum of 4.1 Pa (60 lbf/in ^{2}) under flow conditions. This pressure is approximately equivalent to rain driven by a 29 m/s (65 mi/h) wind. The quantity of water applied to each surface under test shall be at least 5 mm (0.2 in) per unit surface per minute, and each surface so tested shall receive this rate of artificial precipitation for a duration of 5 min. The spray nozzle shall not be more than 3 m (10 ft) from the nearest vertical surface under test.

After the test is completed, an inspection shall be made promptly to determine whether the enclosure meets the requirements of outdoor construction. More specifically, the equipment shall have satisfactorily met the requirements of this test if the visible inspection indicates

a) No water on primary or secondary insulation
b) No water on any electrical components or mechanisms of the assembly
c) No significant accumulation of water retained by the structure or other noninsulating parts (to minimize corrosion)

6.3 Production tests

Standard production tests for MEI switchgear shall be power-frequency dielectric tests, mechanical tests, grounding of instrument transformers case tests, and electrical operation and control wiring test. For these tests, removable elements need not be tested in the assembly if they are tested separately.

6.3.1 Dielectric tests

Power-frequency withstand tests shall be made at the factory on each MEI switchgear in accordance with the requirements of 6.2.1.1 with the exception that tests across the open gap are not required. Tests shall be made between each phase and ground with other phases grounded.

6.3.2 Mechanical operation tests

Mechanical tests shall be performed where applicable to ensure the proper functioning of shutters, operating mechanisms, mechanical interlocks, etc. These tests shall ensure the interchangeability of removable elements designed to be interchangeable.

Copyright © 2001 IEEE. All rights reserved.
Copyright The Institute of Electrical and Electronics Engineers, Inc.
Provided by IHS under license with IEEE
No reproduction or networking permitted without license from IHS
Not for Resale

6.3.3 Grounding of instrument transformer case tests

The effectiveness of instrument transformer case or frame grounding shall be checked by a low potential source, such as 10 V or less, using bells, buzzers, or lights. This test is required only when instrument transformers are of metal case design.

6.3.4 Electrical operation and control wiring test

6.3.4.1 Control wiring continuity

The correctness of the control wiring of a switchgear assembly shall be verified by either

a) Actual electrical operation of the component control devices, or
b) Individual circuit continuity checks by electrical circuit testers.

6.3.4.2 Control wiring insulation test

A 60 Hz test voltage shall be applied after all circuit grounds have been disconnected. Either 1500 V for 1 min or 1800 V for 1 s may be utilized. All wires shall be tested either individually or in groups. At the option of the manufacturer, switchgear mounted devices that have been individually tested may be disconnected during the test.

6.3.4.3 Polarity verification

Tests shall be made to ensure that connections between instrument transformers and meters or relays, etc., are correctly connected with proper polarities. Instruments shall be tested to ensure that pointers move in the proper direction. Such verification does not require tests using primary voltage and current.

6.3.4.4 Sequence tests

MEI switchgear involving the sequential operation of devices shall be tested to ensure that the devices in the sequence function properly and in the order intended.

This sequence test need not include remote equipment controlled by the switchgear assembly; however, this equipment may be simulated where necessary.

6.4 Conformance test

Conformance test procedures for MEI switchgear are given in ANSI C37.57-1990.

6.5 Field dielectric tests

When power-frequency withstand tests are to be made on MEI switchgear after installation in the field, the switchgear shall not be tested at greater than 75% of the test values given in Table 1.

NOTE—Field tests are recommended when new units are added to an existing installation or after major field modifications. The equipment should be put in good condition prior to the field test. It is not expected that equipment shall be subjected to these tests after it has been stored for long periods of time or has accumulated a large amount of dust, dirt, moisture, or other contaminants without first being restored to good condition.

Copyright © 2001 IEEE. All rights reserved.

Copyright The Institute of Electrical and Electronics Engineers, Inc.
Provided by IHS under license with IEEE
No reproduction or networking permitted without license from IHS
Not for Resale

7. Construction

7.1 Buses and primary connections

Buses and primary connections shall be of copper or aluminum, or both. For bus ratings, see 5.4.2.

The bus and connections shall be bare except where close clearances may make insulation necessary. When used, insulation is to be tested according to 6.2.7.

7.1.1 Phase or polarity arrangements

a) The standard phase arrangement on three-phase assembled switchgear buses and primary connections shall be 1, 2, 3, from front to back, top to bottom, or left to right, as viewed from the main switching device operating mechanism side. Certain types of equipment may require other phasing arrangements and a neutral conductor. In these cases, the phasing shall be suitably indicated.

b) Panel mounting devices shall be mounted in the same arrangement as in 7.1.1 a) as viewed from the panel.

7.1.2 Phase sequence

The phase sequence on connection diagrams shall be as follows: When considering voltage to neutral on a polyphase system with respect to the element of time, the voltage of Phase 1 will reach a maximum ahead of the voltage of Phase 2, Phase 3, etc. This sequence shall be designated as phase sequence in the order 1, 2, 3, etc., unless otherwise suitably indicated.

7.1.3 Cable terminations

The MEI switchgear shall provide space for the devices used for making electric and mechanical connections to the incoming and outgoing cables. Each cable terminal connection point shall meet the bolt hole requirements of NEMA CC1-1993.

7.1.4 Bushings, potheads, or other terminators

Space for mounting bushings, potheads, or other terminators shall be provided in the MEI switchgear as required.

7.1.5 Main bus splices

When bolts, nuts, and washers are provided for connecting through buses to other sections, the length of the bolts shall not impair the dielectric integrity.

7.2 Grounding

A ground bus shall be included that will electrically connect together the structures in MEI switchgear and provide for connection to the station ground. A single unit shall be provided with a ground terminal or bus for connection to the station ground.

At points of connection between the ground bus and the assembly, any nonconductive coatings, such as paint, shall be removed or penetrated to ensure good electrical contact.

Circuit connections to the ground bus shall be made so that it is not necessary to open the ground bus to remove any connection made to the ground bus.

Copyright © 2001 IEEE. All rights reserved.
Copyright The Institute of Electrical and Electronics Engineers, Inc.
Provided by IHS under license with IEEE
No reproduction or networking permitted without license from IHS
Not for Resale

Ground connections shall be provided for removable elements to ensure that they are grounded until the primary circuit is disconnected and the removable element is moved a safe distance. See **test position** in IEEE Std C37.100-1992.

When mounted on metal switchgear structures, cases of instruments, instrument transformers, meters, relays, and similar devices shall be considered as being adequately grounded when secured to these structures by metal mounting hardware with adequate provision for penetrating the paint film.

7.3 Control and secondary circuits and devices

7.3.1 General

All voltage circuits used for controling, relaying, or metering shall be protected within the MEI switchgear as follows:

a) All circuits supplied from external sources (ac or dc) shall have short-circuit protection. This protection may be provided by a single set of short-circuit protective devices within the control source incoming section.
b) All circuits supplied from internal sources (ac and dc) shall have short-circuit protection within the same section as the supply source. If these circuits are supplied by a control power transformer, this protection may be in the primary circuit only.

Overcurrent protection of voltage circuits may be provided in addition to the required short-circuit protection.

Other circuits supplying loads (such as heaters, receptacles, or lights) shall have overload and short-circuit protection.

Overcurrent protection of current transformer secondary circuits shall not be provided.

7.3.2 Voltage transformer fusing

The following requirements shall be met:

a) Primary circuits of all voltage transformers shall include current-limiting fuses.
b) Secondary circuits of all voltage transformers shall include fuses or their equivalent.

EXCEPTION—Fuses may be omitted from secondary circuits of voltage transformers if the secondary burden includes voltage regulators, protective relays, or other devices considered sufficiently essential to the operation of the installation to make it preferable to incur hazards associated with the possible destruction of the voltage transformer by a sustained secondary short circuit rather than to risk interruption of the voltage supply to such devices as the result of a momentary secondary short circuit.

Primary and secondary protection devices may be omitted from voltage-dividing devices, such as capacitive and restrictive voltage dividers.

7.3.3 Control and secondary wiring

Flame-resistant, 600 V insulated copper wire, with a cross-sectional area not less than AWG No. 14 stranded (4110 nominal cmil) shall be used on small wiring between component devices or parts of switchgear assemblies. Where wire is connected across a hinge, flexible (37 or more strands) wire shall be used.

Copyright © 2001 IEEE. All rights reserved.

Copyright The Institute of Electrical and Electronics Engineers, Inc.
Provided by IHS under license with IEEE
No reproduction or networking permitted without license from IHS
Not for Resale

For logic level wiring and for wiring from supervisory and annunciator devices to terminal blocks, smaller wire may be used provided it is adequately supported and meets the voltage and current requirements. Wire shall be Class C or D stranded and shall meet the surge requirements of IEEE Std C37.90.1-1989 and IEEE Std C37.90.2-1995. Smaller wire, when used, shall not run in the same wire packs with other control and secondary wiring.

Bushings, grommets, or other mechanical protection shall be provided for the wiring where logic level, control, or secondary wiring is run through a metal sheet, barrier, or raceway.

The internal wiring of component devices or parts shall be in accordance with the applicable industry standards.

The insulated wire shall be type TBS, or SIS as listed in NFPA 70-1999, or an equivalent.

The insulated wire shall meet the requirements of the following standards publications as applicable:

a) Type TBS—NEMA WC5-1992 (ICEA S-61-402)
b) Type SIS—NEMA WC7 (1998) (ICEA S-66-524)

7.3.4 Secondary-wiring terminals

Stranded control wire shall have solderless terminals of the type where the body of the terminal is crimped or indented onto the conductor or where the wire is formed into an eye and confined within a crimp and flat-washer assembly. Solderless terminals are not required for connection to devices that have integral pressure terminal connectors (see the note in this subclause). The wire may be soldered into terminals or, where desirable, directly to devices, such as secondary disconnecting contacts, or to soldered terminals on supervisory control and annunciator equipment.

NOTE—In the absence within this standard of definitive performance requirements, compliance with this clause can be assessed by referencing UL 486A-1997.

7.3.5 Terminal blocks

Terminal blocks incorporating screw or stud-and-nut terminals shall accommodate wire lugs or similar devices affixed to stranded wire. Screw or stud-and-nut terminals intended for use with stranded wire shall have all strands of the conductor confined. Terminal blocks incorporating pressure connectors shall not damage (see note in 7.3.4) the wire; and, when terminating stranded conductors, all strands shall be clamped within the connector.

Terminal blocks for external connections shall be suitable to accept AWG No. 10 (10 380 nominal cmil) stranded wire. The use of solid wire is not recommended.

7.3.6 Designation of auxiliary switches and contacts

The operation of auxiliary switches and contacts for circuit interrupting and switching devices shall be designated as follows:

a Open when the device is in the de-energized or nonoperated position
b Closed when the device is in the de-energized or nonoperated position
aa Open when the operating mechanism of the main device is in the de-energized or nonoperated position
bb Closed when the operating mechanism of the main device is in the de-energized or nonoperated position

Copyright © 2001 IEEE. All rights reserved.
Copyright The Institute of Electrical and Electronics Engineers, Inc.
Provided by IHS under license with IEEE
No reproduction or networking permitted without license from IHS
Not for Resale

e, f, h, k Special contacts and auxiliary switches other than *a*, *b*, *aa*, or *bb*.

If several auxiliary switches and contacts are present on the same device, they shall be designated numerically 1, 2, 3, etc., when necessary. On diagrams of all types, contacts and switches shall be shown in the de-energized position of the device.

7.3.7 Device function numbers

Device function numbers shall be in accordance with IEEE Std C37.2-1996.

7.3.8 Voltage limits of instrument and control circuits

Voltage and current transformers shall be used for all instruments, meters, and relays connected to ac circuits over 254 V to reduce the voltage on instrument wiring that must necessarily be closely grouped. DC instruments, meters, and relays may be used directly on circuits up to 280 V if their cases are grounded to the switchgear structures in accordance with 7.2.

7.3.9 Polarity of dc connections to device coils

Where coils on devices used in MEI switchgear are connected to a dc supply and, when de-energized, are not disconnected from both the positive and negative supply leads, such coils shall be connected so that, when de-energized, they will be left connected to the negative supply lead to minimize the possibility of corrosion.

7.3.10 Isolation

Instruments, meters, relays, secondary control devices, and their wiring shall be isolated by grounded metal barriers from all primary circuit elements with the exception of short lengths of wire, such as at instrument transformer terminals and secondary devices.

7.4 Miscellaneous

7.4.1 Nameplate marking

The following minimum information shall be given on switchgear assemblies nameplates:

a) Manufacturer's name and address
b) Manufacturer's type designation (optional)
c) Manufacturer's identification reference
d) Rated maximum voltage (where applicable)
e) Rated frequency (where applicable)
f) Rated momentary withstand current
g) Rated short-time withstand current
h) Rated short-time withstand current duration (when less than 2 s)

7.4.2 Wiring devices

Lighting fixtures provided in outdoor switchgear shall be of a type and shall be so located so that lamps may be safely replaced without de-energizing the primary equipment. Convenience outlets shall be of the two-pole, three-wire grounding type and protected by a ground-fault interrupter.

Copyright © 2001 IEEE. All rights reserved.

Copyright The Institute of Electrical and Electronics Engineers, Inc.
Provided by IHS under license with IEEE
No reproduction or networking permitted without license from IHS
Not for Resale

7.4.3 Inspection windows

Windows provided for the inspection of disconnecting switches or other devices shall be of a material suitable for the application.

7.4.4 Covers

For ease in handling, cover plates that are intended to provide access for inspection and maintenance shall not exceed 1.12 m^2 (12 ft^2) in area or 27 kg (60 lb) unless they are equipped with lifting means or hinges.

7.4.5 Ventilation openings and vent outlets

Openings for pressure relief or ventilation shall be arranged so that the gas or vapor escaping during normal operation will not endanger personnel operating the switchgear.

7.4.6 Service disconnecting means

Switchgear assemblies designated as the service disconnecting means shall be designated so that they can be installed in accordance with the applicable provisions of NFPA 70-1999.

7.5 Materials and finish

7.5.1 Materials

The materials for MEI switchgear shall be suitably supported sheet metal. Barriers between the primary sections of adjacent vertical sections shall not be less than MSG No. 11 [nominal thickness, 3 mm (0.119 in)]. All other covers, barriers, panels, and doors shall not be less than MSG No. 14 [nominal thickness, 1.9 mm(0.075 in)].

The minimum thickness requirements are based on the use of steel. Where other metals are used, the thickness shall be modified to provide equivalent strength and deflection.

NOTE—For example, if aluminum alloy sheet, having a yield strength of 140×10^6 Pa (20 000 lbf/in^2), is used in the place of sheet steel, the thickness specified above shall be increased by 50% to provide equivalent strength and deflection.

Doors or panels used to support devices shall be increased in thickness or otherwise strengthened as necessary to support the devices.

7.5.2 Finishes and color

All steel surfaces to be painted shall receive a phosphatizing treatment or equivalent prior to applying paint.

External and internal surfaces shall be coated with at least one coat of corrosion-resistant paint. The finish paint system shall comply with the requirement of 6.2.8.

The under-surfaces of outdoor assemblies shall additionally receive either a corrosion-resistant undercoating or an additional thickness of corrosion-resistant paint.

The preferred color for the finish on switchgear assemblies shall be light gray No. 61 per ASTM D1535-97, (munsell notation 8.3 G6.10/0.54).

NOTES

1—Internal detail parts may have metallic plating or equivalent in lieu of paint finish.

Copyright © 2001 IEEE. All rights reserved.
Copyright The Institute of Electrical and Electronics Engineers, Inc.
Provided by IHS under license with IEEE
No reproduction or networking permitted without license from IHS
Not for Resale

2—For conformance testing, a recognized organic coating system that has been investigated and found equivalent for use as protection against atmospheric corrosion of electrical equipment steel enclosures for outdoor use may be utilized.

7.6 Precautionary labels

Each MEI switchgear should be provided with appropriate precautionary labels to call the users' attention to potential hazards that are inherent to the equipment and that cannot be eliminated by design. See ANSI Z535.4-1998 for recommendations.

7.7 Barriers

If, when opened, the hinged door provided for access to the fuses exposes the energized terminals of the switch, barriers shall be provided to guard against incidental contact with the energized terminals.

7.8 Shutters

On drawout MEI switchgear, automatic shutters shall be provided in the stationary structure to prevent incidental contact with the live parts of the primary circuit when the removable element is in the test position, is in disconnected position, or has been removed.

7.9 Interlocks

7.9.1 Stationary switches

Mechanical or key interlocks shall be provided on MEI switchgear to prevent access to the power fuses (unless the interrupter switch is open) and to prevent closing the interrupter switch when the power fuses or the interrupter switch are accessible.

Interrupter switches equipped with stored energy mechanisms shall have interlocks to prevent access to the switch compartment unless the stored energy mechanism is in the discharged or blocked position.

7.9.2 Drawout switches

With the switch in the closed position, movement of the removable element to and from the connected position shall be prevented.

With the switch in the open position and the removable element at any intermediate point between disconnected and connected positions, closure of the switch (mechanically or electrically) shall be prevented.

With the operating spring in the charged position, movement of the removable element to and from the connected position shall be prevented.

7.10 Enclosure categories

See Annex A for description of enclosure categories and related requirements.

7.11 Indoor MEI switchgear, access, and ventilation

Enclosures for indoor MEI switchgear shall be ventilated with hinged door(s) for access to fuses.

Copyright © 2001 IEEE. All rights reserved.

Copyright The Institute of Electrical and Electronics Engineers, Inc.
Provided by IHS under license with IEEE
No reproduction or networking permitted without license from IHS
Not for Resale

7.12 Outdoor MEI switchgear, access, and ventilation

Enclosures for outdoor MEI switchgear shall be ventilated and shall be equipped with suitable access doors.

Doors shall be equipped with latches, stops shall be provided to hold the doors in the open position, and provision shall be made for padlocks. Heaters or other effective means shall be provided to minimize condensation.

8. Application guide for MEI switchgear

8.1 Unusual service conditions

It is strongly recommended that the usual service conditions, as described in Clause 4, be provided for MEI switchgear applications if practical (artificially, if necessary). However, if unusual conditions exist and cannot be eliminated, the considerations in 8.1.1 through 8.1.4 apply.

NOTE—Any unusual service conditions should be specified by the user.

8.1.1 Ambient air temperature above 40 ˚C

When MEI switchgear is applied where the ambient air temperature is higher than 40 ˚C, its performance may be affected and special consideration should be given to these applications. The total temperature limits for parts and materials as listed in 5.5 should not be exceeded. Therefore, for the higher ambients, the equipment should be derated to a continuous current value that maintains the total temperature limits.

8.1.2 Ambient air temperature below –30 ˚C

Special consideration is also required when MEI switchgear is applied where the ambient air temperature is less than –30 ˚C. Space heating and thermal insulation to minimize the effects of such exposure should be considered. If consideration is not possible, the effect of low temperatures on the functional performance of such materials as oils, plastic insulation on primary and secondary circuits, control wire insulation, and lubricants should be considered.

8.1.3 Application at unusual altitudes

Switchgear assemblies that depend on air for an insulating and cooling medium will have a higher temperature rise and a lower dielectric strength when operated at altitudes above values specified in Clause 4. For applications at higher altitudes, the rated 1 min power-frequency withstand voltage, the lightning impulse withstand voltage (BIL), and the continuous current rating of the assemblies should be multiplied by the correction factors in Table 5 to obtain the modified ratings. For applications above 1000 m (3300 ft), use of surge arresters on each circuit, selected to keep transient voltages below the reduced levels, should be considered.

8.1.4 Modification of equipment for unusual environment

Successful performance of standard MEI switchgear may be extended to unusual environments by special considerations when developing equipment specifications. Several construction modifications that will mitigate the effects of these environments may be made in accordance with 8.1.4.1 through 8.1.4.6, but the emphasis should be on eliminating such conditions if at all possible. However, if these undesirable conditions cannot be eliminated, more frequent maintenance may be required.

Copyright © 2001 IEEE. All rights reserved.
Copyright The Institute of Electrical and Electronics Engineers, Inc.
Provided by IHS under license with IEEE
No reproduction or networking permitted without license from IHS
Not for Resale

Table 5—Altitude correction factors

Altitude	Voltage factor	Current factor
1000 m (3300 ft) and below	1.00	1.00
1500 m (5000 ft)	0.95	0.99
3000 m (10 000 ft)	0.80	0.96

NOTES

1—Intermediate values may be obtained by interpolation.

2—For devices used in switchgear assemblies, standards covering the specific devices should be used to determine the specific altitude correction factors.

8.1.4.1 Exposure to damaging fumes, vapors, steam, salt air, and oil vapors

Indoor and outdoor equipment intended for exposure to damaging fumes, vapors, steam, salt air, and oil vapors should be provided with the following modifications:

a) Minimum of two coats of paint should cover all structural parts. One of the coats should be a corrosion- or rust-resistant primer.

b) All steel parts that are not painted or plated should be covered with protective grease.

c) All current-carrying joints should be covered with a coating of nonoxidizing grease. Greasing of nonarcing contacts should only be done on recommendation of the manufacturer.

d) All coils should be impregnated with insulating compound and covered with appropriate protective coating.

e) Heaters, in quantity and rating sufficient to minimize condensation in all compartments, should be furnished.

8.1.4.2 Exposure to excessive dust, abrasive dust, magnetic dust, or metallic dust

Indoor or outdoor equipment intended for exposure to excessive dust, abrasive dust, magnetic dust, or metallic dust should be provided with the following modifications:

a) Totally enclosed nonventilated equipment should be furnished with a current rating of 70% of the ventilated rating or as specified by the manufacturer. Condensation could be a problem and should be evaluated.

b) For outdoor assemblies, ventilated enclosures may be furnished with the ventilating openings equipped with dust filters. The requirements for these filters vary over such a range that standard specifications for their application are not practicable. Filters are available in the washable type and the disposable type. Where used, they shall be cleaned or replaced at intervals, depending upon the amount of dust in the air. Filters that are not cleaned or changed when required may cause excessive equipment temperature or condensation.

c) The type of filter used should be selected based on the size of dust particles encountered and the extent to which dust is to be excluded. Where very fine dust particles are to be excluded, disposable filters soaked in oil should be used. These filters shall be changed at frequent intervals.

d) Forced ventilation may be required, depending upon the volume of air required for ventilation and the severity of the environment. When furnished due to environment, the blower and filter should be installed on the intake to minimize the possibility of drawing dust or other foreign matter into and throughout the switchgear assembly.

Copyright © 2001 IEEE. All rights reserved.

Copyright The Institute of Electrical and Electronics Engineers, Inc.
Provided by IHS under license with IEEE
No reproduction or networking permitted without license from IHS
Not for Resale

8.1.4.3 Exposure to hot and humid climate

Indoor and outdoor equipment intended for exposure to hot and humid climates should be made fungus-resistant by the following modifications:

a) Heaters in quantity and rating sufficient to minimize condensation in all compartments should be furnished.
b) Secondary wiring that is not inherently fungus-resistant should have fungus-resistant coating applied. Secondary wiring that has fungus-resistant insulation should not require further treatment.
c) All impregnated coils should be given an external treatment with fungus-resistant coating. Encapsulated coils that are inherently fungus-resistant should not require further treatment.
d) Paints, such as alkyd enamels, having a fungus- and rust-resistant property should be used.
e) Insulation that is not inherently fungus-resistant should have fungus-resistant coating applied. Insulation that is inherently fungus-resistant should not require further treatment. Fungus-resistant coatings should not be applied where they will interfere with the proper operation of the apparatus. In such cases, the part should be inherently fungus-resistant. These coatings should not reduce the flame-resistant properties.

The fungus-resistance of materials should be determined in accordance with ASTM G21-96. Materials to be classified as fungus-resistant should have a rating not greater than 1.

Materials that are made fungus-resistant by the application of a coating should have the coating reapplied at periodic intervals.

8.1.4.4 Exposure to explosive mixtures of dust or gases

Application of MEI switchgear for explosion-proof requirements is not recommended.

8.1.4.5 Exposure to abnormal vibration, shocks, or tilting

Indoor and outdoor equipment is designed for mounting on level structures free from vibration, shocks, or tilting.

Because these conditions vary so widely, the manufacturer should be consulted for each specific application where vibration, shocks, or tilting is to be encountered.

The full nature of the abnormal motion should be specified. The magnitude and frequency range of the dynamic motion are required so that resonances may be investigated. This is usually specified by an acceleration response spectrum curve for the mounting surface on which the MEI switchgear is to be installed. The response spectrum is a plot of the maximum response of single-degree-of-freedom bodies, at a damping value expressed as a percent of critical damping of different natural frequencies, when these bodies are rigidly mounted on the surface of interest (that is, on the ground for the ground response spectrum or on the floor for the floor response spectrum) when that surface is subjected to a given abnormal motion as modified by any intervening structures. The response spectrum is useful in designing a test or in making an analysis of the performance of the MEI switchgear equipment mounted on the same surface and subjected to the same motion.

In the case of tilting, the maximum angles of tilt, both transverse and longitudinal, should be specified. The exact performance requirements should also be defined. Equipment specifically designed for a usual installation on a substantially level surface free from excessive vibration, shock, or tilting may be damaged and may not be able to function properly when subjected to excessive motion and displacement. Hence, the application should be carefully analyzed, and the essential performance requirements should be precisely defined.

Copyright © 2001 IEEE. All rights reserved.
Copyright The Institute of Electrical and Electronics Engineers, Inc.
Provided by IHS under license with IEEE
No reproduction or networking permitted without license from IHS
Not for Resale

8.1.4.6 Exposure to seismic shock

Refer to IEEE Std 344-1987 for Class 1E equipment in a nuclear power-generating station.

8.2 System characteristics—voltage and frequency

MEI switchgear is designed for use on three-phase, 60 Hz, grounded or ungrounded ac systems. Application on other types of systems should be reviewed with the manufacturer. Such systems include

a) Three-phase, four-wire with insulated neutral
b) Two-phase
c) Frequency other than 60 Hz or sinusoidal waveforms

MEI switchgear is intended for application on systems where the maximum operating voltage of the system does not exceed the maximum voltage for which the equipment is designed. The voltages for various types of MEI switchgear are listed in Table 1.

NOTE—MEI switchgear may utilize voltage-sensitive components such as voltage transformers and surge arresters with a rated maximum voltage less than the rated maximum voltage of the MEI switchgear. The upper limit for operation may be determined by the rating of these components.

8.3 Overvoltage considerations—insulation levels

The insulation levels to which MEI switchgear is designed are listed in Table 1.

The information on the application of surge arresters and surge capacitors for protection against overvoltages is given in 8.8.

8.4 Continuous current rating and overload capability

MEI switchgear assemblies are designed for normal application where the sustained load current does not exceed the rated continuous current, the altitude above sea level is 1000 m (3300 ft) or less, the ambient air temperature does not exceed 40 ˚C, and the effects of solar radiation can be neglected. For unusual altitudes, derating factors should be applied in accordance with 8.1.3. If solar radiation is significant, continuous current capability is limited, refer to IEEE Std C37.24-1986. The rated continuous current is based on not exceeding the limits of the hottest-spot total temperature of the various parts of the switchgear assembly when this value of current is sustained in an ambient air temperature of 40 ˚C. When the ambient air temperature is greater than 40 ˚C, the current should be reduced to less than rated continuous current to keep total temperature of these parts within allowable limits. The application of switchgear assemblies should be based on avoiding operation at current higher than the rated continuous current of the assembly. However, since the criterion is total temperature, the following considerations are in order:

a) It is permissible to exceed rated current for short periods, such as in the starting of motors or synchronous condensers, or when energizing cold loads. Generally, the short duration of this type of current increase does not raise temperatures significantly.
b) Interrupter switch loading should not exceed the load interrupting rating of the switch or the continuous current rating of the fuse.
c) The long-time minimum melt current and time current characteristics of fuses will be modified by high ambient temperatures. See ANSI C37.48, Clause 8.

Copyright © 2001 IEEE. All rights reserved.

Copyright The Institute of Electrical and Electronics Engineers, Inc.
Provided by IHS under license with IEEE
No reproduction or networking permitted without license from IHS
Not for Resale

8.4.1 Conductor temperature

Cables connected to MEI switchgear should be capable of withstanding the 65 ˚C ambient temperature to which they may be subjected.

8.4.2 Conductor terminations

Consideration should be given to the use of suitable connectors that are designed for use with the outgoing conductor and terminals in the switchgear units.

8.5 Short-circuit considerations

MEI switchgear should have short-circuit capability equal to or greater than the short-circuit capability the system on which it is applied. The short-circuit capability (momentary, or short-time, or both) of the MEI switchgear is equal to the short-circuit capability of the included switching protective devices.

8.6 Nuclear power plant application

MEI switchgear applied in nuclear power-generating stations and particularly as Class 1E equipment should meet the requirements of pertinent standards that have been developed for such applications.

8.7 Exposed circuits

Protection against lightning surges is required for all switchgear assemblies having exposed circuits. Circuits are exposed if they are outside buildings or do not have connected surge protection adequate to keep voltages below the withstand level of the switchgear.

8.8 Surge arresters in switchgear assemblies

Surge arresters used in switchgear assemblies should have adequate discharge capability and be voltage limiting to keep voltage surges below the insulation level of the protected equipment. Special consideration should be given to the use of coordinated surge arresters for MEI switchgear installed at high altitudes.

8.9 Protection and isolation of switchgear connected to other switching equipment

When MEI switchgear is electrically connected to other power switching equipment, the circuit protective equipment should be provided in the connection between the two so that a fault in one assembly will not result in the loss of the other assembly.

NOTE—Where both assemblies supply power to an entire integral unit process, so that the shutdown of one part necessitates the shutdown of the entire process, the circuit protective equipment is not required. For additional information and further study of switching arrangements, see IEEE Std 141-1993, IEEE Std 142-1991, IEEE Std 241-1990, IEEE Std 242-1986, and IEEE Std 446-1995.

8.10 Current transformer accuracies

The manufacturer should be consulted for selection of current transformer accuracies based upon application requirements by the user.

Copyright © 2001 IEEE. All rights reserved.
Copyright The Institute of Electrical and Electronics Engineers, Inc.
Provided by IHS under license with IEEE
No reproduction or networking permitted without license from IHS
Not for Resale

9. Guide for handling, storage, and installation

This clause is a guide for the handling, storage, and installation of MEI switchgear and emphasizes safety aspects and other considerations when working with this type of equipment. It supplements, but does not replace, the manufacturer's detailed instructions on these subjects. The objective is to furnish additional guidelines to promote and enhance a reliable installation.

The manufacturers of MEI switchgear include instruction books and drawings with their equipment, containing detailed recommendations for storage, handling, installation, operation, and maintenance.

Personnel responsible for these functions should review these recommendations before handling the equipment. Particular attention should be given to recommendations for preparing foundation and forms on which the switchgear is to be mounted. One set of manufacturer's instruction books should remain with the MEI switchgear when in storage or at the installation site.

9.1 Handling

9.1.1 Receiving

MEI switchgear should be carefully inspected and packed before leaving the factory. Immediately upon receipt, the equipment should be examined for damage that may have been sustained during transit. If damage is evident or indications of rough handling are visible, the carrier (transportation company) and the manufacturer should be notified promptly.

Only authorized personnel should be permitted to handle the equipment. Care should be exercised in handling each piece of equipment (even if crated) because parts may be damaged.

9.1.2 Rigging

Instructions for lifting and handling the equipment are contained in the manufacturer's instruction books and drawings. The rigging should be adequate for the size and weight of the equipment.

9.1.3 Storage

Indoor switchgear that cannot be installed immediately should be stored in a dry, clean location and should remain in crates during the storage period. The longer the period of storage, the greater the care required for protecting the equipment. During storage, the MEI switchgear should be placed on a level surface to prevent unnecessary strain and possible distortion. During the construction period, protection should be provided against dust, dirt, falling objects, dripping water, excessive water, excessive moisture, and other possible causes of damage to the equipment. Any temporary covering should not restrict ventilation and should not be removed until the equipment is ready for installation. It is preferable to store indoor equipment within a heated building. If this condition is not possible, special precaution should be taken to keep the equipment sufficiently warm with adequate ventilation to prevent condensation during the storage period. If necessary, temporary heating should be installed in the equipment.

If outdoor switchgear cannot be installed and energized, temporary power shall be provided for the operation of the space heaters to prevent moisture condensation within the housing.

Ventilation openings in MEI switchgear should be left open to permit proper air circulation.

Copyright © 2001 IEEE. All rights reserved.

Copyright The Institute of Electrical and Electronics Engineers, Inc.
Provided by IHS under license with IEEE
No reproduction or networking permitted without license from IHS
Not for Resale

9.1.4 Installation

When installing MEI switchgear,

a) Workers should be adequately protected from live parts, for example, with barriers or screens
b) NESC Rule 124 for guarding live parts should be observed

9.1.5 Removal of shipping members

Before installing MEI switchgear, a careful check should be made to ensure that all members included for shipping have been removed.

9.1.6 Connections

9.1.6.1 Bus connections

When the MEI switchgear consists of several shipping sections, the main bus is necessarily disconnected before shipping. The main bus should be reconnected with particular attention to the cleanliness of and pressure between the contact surfaces. It is essential that the connections be securely bolted because the conductivity of the joints is dependent on the applied pressure. Refer to manufacturer's torque instructions and any other special instructions.

9.1.6.2 Cable connections

Before making up the cable connections, the phasing of each cable should be determined in accordance with the connection diagram, and the cables tagged accordingly. The cable manufacturer's instructions should be followed when forming cable terminations and during the installation of the cable. It is essential that the connections be clean and securely bolted because the conductivity of the joints is proportional to the applied pressure. The terminating devices (where required) should be installed pursuant to the terminator manufacturer's instructions.

9.1.6.3 Control connections

Control wires between shipping sections should be reconnected as marked by the manufacturer. Connections that are to be connected to terminals in apparatus remote from the switchgear should be carefully checked against the connection diagram. When making connections to terminals, care should be exercised to ensure that the connections are properly made.

9.1.6.4 Grounding

Sections of ground bus previously disconnected at shipping sections shall be reconnected when the units are installed. All secondary wiring should be connected to the switchgear ground bus as indicated on the drawings. The ground bus should be connected to the system ground with as direct a connection as possible and should not be run in metal conduit unless the conduit is adequately bonded to the circuit. The grounding conductor should be capable of carrying the maximum line-to-ground short-circuit current for the duration of a fault. A reliable ground connection is necessary for every switchgear installation. It should be of sufficient ampacity to handle any abnormal condition that might occur on the system and should be independent of the grounds used for other apparatus. A permanent low-resistance ground is essential for adequate protection and safety.

Copyright © 2001 IEEE. All rights reserved.
Copyright The Institute of Electrical and Electronics Engineers, Inc.
Provided by IHS under license with IEEE
No reproduction or networking permitted without license from IHS
Not for Resale

9.2 Preoperation check

Care shall be exercised to prevent the MEI switchgear from being energized from the power system while preliminary tests are being conducted. If disconnecting means is not available, line leads should be disconnected. All internal connections should be examined to ensure that they have not been loosened or damaged during shipment or installation, and all bolted connections and joints should be tightened to ensure good contact. If spring washers are used under bolt head and nuts, they should be tightened in accordance with manufacturer's instructions. All wiring connections should be checked for tightness, including connections at instrument transformers and all terminal blocks. Current transformer shorting devices on all active circuits should be removed.

The integrity of control buses should be checked with an ohmmeter to ensure against short circuits in the control wiring. Control wiring should be given a high potential test or be insulation-resistance-tested, and power circuits such as buses and interrupter switches should receive a power-frequency withstand test as described in 6.2.1.1 and 6.5. After MEI switchgear has been installed and all interconnections completed, any control schemes should be operationally tested and power connections given a final check for phase rotation and sequence before the switchgear is finally energized for service.

9.3 Interrupter switches

All interrupter switches should be inspected for damaged parts and any loose connections pursuant to the manufacturer's instructions. The manual operation should be checked by manually moving the operating handle to the open and closed position. The drawout interrupter switches should also be checked for proper operation while in the switchgear cubicle test position, for both closing and opening.

9.4 Interlocks

Interlocks should be checked for proper operation before power is applied to the switchgear. The access interlock should be checked to ensure that

a) Access to the power fuses cannot be obtained unless the interrupter switch is open.
b) The interrupter switch cannot be closed while the power fuses are accessible.

To maintain the integrity of key interlock systems, duplicate keys should be destroyed or retained in a place accessible only to authorized personnel.

9.5 Energization

After the interrupter switches and interlocks have been tested satisfactorily, they are ready for operation. Each compartment door should be closed and latched before energizing the circuit.

Copyright © 2001 IEEE. All rights reserved.

Copyright The Institute of Electrical and Electronics Engineers, Inc.
Provided by IHS under license with IEEE
No reproduction or networking permitted without license from IHS
Not for Resale

Annex A

(informative)

Guide for enclosure categories and related requirements

IEEE Std C37.20-1969 (Reaff 1981) (1974 Consolidated Edition), IEEE Standard for Switchgear Assemblies Including Metal-Enclosed Bus, had included information (Clause 7) about tamper-proof switchgear. However, this terminology created questions of intent related to public exposure; therefore, IEEE Std C37.20.3-2001 eliminated this construction feature from the basic standard.

During the development of other standards, an enclosure security section was developed to provide guidance for varying types of construction described as Categories A, B, and C. These categories are included in ANSI C37.57-1990, but basic construction features are not normally included in a conformance test standard.

Construction details are normally included in the basic standards. However, since Category A covers the prior concept of tamper-proof, it was decided that it would be best contained in this annex with the other categories to be utilized as options.

Category C covers metal-enclosed interrupter switchgear with exposed bushings, bus, or terminals.

Category B, while it represents basic metal-enclosed switchgear construction, remains in this annex for continuity.

NOTE—ANSI C37.57-1990 requires conformance testing as applicable for Category A, B, or C.

A.1 Scope

This annex covers enclosure categories and related requirements.

A.2 Enclosure categories

Switchgear assemblies are installed in a variety of locations that have different degrees of exposure to the general public. The enclosure of the switchgear assembly provides a degree of protection to the enclosed conductors or equipment and provides a degree of protection to personnel against incidentally contacting live parts.

Enclosures are categorized as Category A, B, or C as listed in Table A.1.

A.2.1 Category A enclosures

Category A enclosures are intended to provide a degree of protection against contact with enclosed equipment in ground-level installations subject to deliberate unauthorized acts by members of the unsupervised general public. The enclosure shall meet the requirements of Table A.1, Category A.

Copyright © 2001 IEEE. All rights reserved.
Copyright The Institute of Electrical and Electronics Engineers, Inc.
Provided by IHS under license with IEEE
No reproduction or networking permitted without license from IHS
Not for Resale

Table A.1—Requirements for enclosure categories

Features	Subclause	Required for Category		
		A	B	C
All enclosures				
Basic requirements Rigidity (sheet meetal)	A.3.4 and A.3.5	Yes	Yes	Yes
Exposed live parts permisible	A.3.13	No	No	Yes
Operating handle protection	A.3.8 and A.3.9	Yes	No	No
Vent openings (permissible)	A.3.7	Yes	Yes	N/A
Doors (if supplied)	A.3.6	Yes	Yes	Yes
Doors—handles lockable	A.3.6	Yes	Yes	No
Doors—captive fasteners permitted	A.3.6	N/A	Yes	Yes
Hinge pins—nonremovable door	A.3.6	Yes	No	No
Drain valves, gauges, etc. (locked cover)	A.3.11	Yes	No	No
Caution and warning signs	A.3.14	Yes	Yes	Yes
Viewing pane—lockable cover	A.3.10	Yes	No	No
Outdoor enclosures				
Material	A.3.12	Yes	Yes	Yes
Hinges	A.3.12	Yes	Yes	Yes
Gaskets	A.3.12	Yes	Yes	Yes
Doorstop	A.3.12	Yes	Yes	Yes
Drainage	A.3.12	Yes	Yes	Yes
Design tests	A.3.12	Yes	Yes	Yes

N/A = Not applicable

A.2.2 Category B enclosures

Category B enclosures are intended for use in installations not subject to deliberate unauthorized acts by members of the unsupervised general public primarily to provide a degree of protection to unauthorized and untrained personnel against incidental contact with enclosed equipment. The enclosures shall meet the requirements of Table A.1, Category B.

A.2.3 Category C enclosures

Category C enclosures are intended to provide a degree of protection against contact with enclosed equipment in secured installations intended to be accessible only to authorized persons. The enclosures shall meet the requirements of Table A.1, Category C.

Copyright © 2001 IEEE. All rights reserved.

Copyright The Institute of Electrical and Electronics Engineers, Inc.
Provided by IHS under license with IEEE
No reproduction or networking permitted without license from IHS
Not for Resale

A.3 Enclosure requirements

A.3.1 Construction

Enclosures shall be of metal suitably supported, constructed, and assembled so that the enclosure will have the strength and rigidity necessary to meet the requirements of this standard.

A.3.2 Painting and corrosion protection

Unless the enclosure is of a material that will resist corrosion, both inside and outside surfaces shall be finished in accordance with 7.5.2. The MEI switchgear shall withstand the applicable paint qualification test.

A.3.3 Materials

The thickness of a sheet-metal enclosure shall not be less than the limits indicated in Table A.2. If metals other than steel are used, the thickness shall provide equivalent strength and deflection.

Table A.2—Minimum thickness of sheet metal for carbon steel or stainless steel enclosures

Without support frame[a]				With supporting frame or equivalent reinforcing				Minimum thickness (MSG)
Maximum width[b]		Maximum length[c]		Maximum width[b]		Maximum length[c]		Uncoated
cm	in	cm	in	cm	in	cm	in	
84	33	Not limited	—	130	51	Not limited	—	14
97	38	119	47	137	54	168	66	14
107	42	Not limited	—	163	64	Not limited	—	13
119	47	150	59	173	68	213	84	13
132	52	Not limited	—	203	80	Not limited	—	12
152	60	188	74	213	84	261	103	12
160	63	Not limited	—	246	97	Not limited	—	11
185	73	229	90	262	103	323	127	11

[a]See A.3.5.
[b]The width is a smaller dimension of a rectangular sheet metal piece that is part of an enclosure. Adjacent surfaces enclosure may have supports in common and be made from a single sheet.
[c]For panels that are not supported along one side (for example, side panels of boxes), the length of the unsupported side should be limited to the dimensions specified.

A.3.4 Framework

A supporting structure shall be formed of angles, channels, folded rigid sections of sheet metal, or the equivalent, rigidly fastened together and having essentially the same outside dimensions as the enclosure surfaces.

Copyright © 2001 IEEE. All rights reserved.
Copyright The Institute of Electrical and Electronics Engineers, Inc.
Provided by IHS under license with IEEE
No reproduction or networking permitted without license from IHS
Not for Resale

With reference to A.3.4 and Table A.2, a construction is not considered to have a supporting frame if it is

a) A single sheet with single formed flanges (formed edges)
b) A single sheet that is die formed (corrugated or ribbed)
c) An enclosure surface loosely attached to a frame, that is, with spring clips

A.3.5 Equivalent construction

A.3.5.1 Construction

The unsupported area of an enclosure may be greater than shown in Table A.2 if the enclosure is reinforced so that it meets the requirements of A.3.5.2 and A.3.5.3.

A.3.5.2 Deflection test

The following test is to be applied to the front, end, side, and rear walls of each enclosure:

When a force of 445 N (100 lbf) is applied perpendicular to the surface of any point on the enclosure through a rod having a 12.7 mm × 12.7 mm (0.5 in × 0.5 in) face, the inward deflection will not impair the dielectric criteria of 5.2.2 or affect mechanical performance. For the test, the enclosure may be laid on its back on a smooth, solid, horizontal surface with the door closed and the front panel or cover secured as intended. The test force shall be applied at various points on the enclosure likely to cause deflection. The same sample may be used for more than one test provided no deflection due to a previous test is permanent.

A.3.5.3 Torsion test

With each enclosure in a vertical position, the base is to be secured to a rigid surface. The top corners are then to be twisted around the vertical axis of the enclosure by application of 890 N (200 lbf) force to the corner that results in the greatest torsional deflection. With this torsional force applied, the dielectric capability shall not be impaired nor shall mechanical performance be adversely affected.

A.3.6 Access doors and covers

A part of the enclosure such as a door, cover, or tank shall be provided with a means (such as latches, locks, interlocks, or captive fasteners) for firmly securing it in place. Multiple fasteners shall be located or used to hold the door or cover closed over its entire length. A hinged cover more than 1.2 m (4 ft) long on the hinged side shall have at least a two-point latch, or have at least two captive fasteners.

The opening handles for doors on equipment for Category A shall be lockable. Captive fasteners are permitted on Category B equipment. Exposed hinge pins shall be nonremovable on doors of Category A or, as an alternative, the door shall be removable in the closed position.

A.3.7 Enclosure and ventilation openings

A.3.7.1 Enclosure openings

When the enclosure is completely and properly installed, openings in the enclosure, other than ventilation openings, shall prevent the entrance of a rod having a diameter of 3.2 mm (0.125 in), with one exception. If the distance between the opening and the nearest not-fully-insulated live part is greater than indicated in Table A.3, the opening may permit the entry of a rod having a diameter greater than 3.2 mm (0.125 in), but not greater than 12.7 mm (0.5 in).

Copyright © 2001 IEEE. All rights reserved.

Copyright The Institute of Electrical and Electronics Engineers, Inc.
Provided by IHS under license with IEEE
No reproduction or networking permitted without license from IHS
Not for Resale

Table A.3—Clearance to ventilation openings

Rated maximum voltage	Clearance (mm)
4.8	140
8.3	165
15.0	203
38.0	381

A barrier or equivalent shall be located so that it intercepts all live parts from line of sight through the protected opening.

A.3.7.2 Ventilation openings

Ventilation openings shall prevent the entrance of a rod having a diameter of 13 mm (0.5 in), with one exception. If the distance from the opening and the nearest not-fully-insulated live part is greater than indicated in Table A.3, the opening may permit entry of a rod having a diameter greater than 13 mm (0.5 in), but not greater than 19 mm (0.75 in).

A barrier or equivalent shall be located so that it intercepts all live parts from line of sight through the protected opening.

EXCEPTION—A larger opening above the upper edge of the enclosure, but under the overhang of the top, is acceptable, if by means of its size, baffling, etc., it will prevent a straight rod 13 mm (0.5 in) in diameter from approaching any uninsulated live parts inside the enclosure by a distance not less than indicated in Table A.3.

The diameter of the wires of a screen shall not be less than 1.3 mm (0.051 in) if the screen openings are 322 mm^2 (0.5 in^2) or less in area and shall not be less than 2.1 mm (0.081 in) for larger screen openings.

Perforated sheet steel and sheet steel employed for expanded-metal mesh shall not be less than 1.1 mm (0.042 in) thick for mesh openings or perforations 320 mm^2 (0.5 in^2) or less in area. Perforated sheet steel and sheet steel employed for expanded-metal mesh should not be less than 2.1 mm (0.081 in) thick for larger openings or perforations.

A ventilating opening in the top of the enclosure shall prevent the entry of falling dirt.

A.3.7.3 Rod entry tests

Rod entry tests shall be made by attempting to insert the end portion of straight rods of diameters specified in A.3.7.1 and A.3.7.2 into the equivalent cavities of the enclosure.

A.3.7.4 Evaluation

The enclosure is considered to have met the requirement of these tests if the rod either has not entered the enclosure or is restricted by a barrier from intrusion into the enclosure interior.

A.3.8 Operating handle protection

Device-operating handles on the external surface of MEI switchgear enclosures shall be lockable or provided with lockable covers for Category A equipment.

Copyright © 2001 IEEE. All rights reserved.
Copyright The Institute of Electrical and Electronics Engineers, Inc.
Provided by IHS under license with IEEE
No reproduction or networking permitted without license from IHS
Not for Resale

A.3.9 Operating handles

If the operation of a remote or automatic tripping device will result in sudden movement of an operating handle, the motion of the handle shall be restricted or the handle shall be guarded to prevent injury to persons in the vicinity of the handle.

A.3.10 Viewing panes

A transparent material covering an observation opening and forming a part of the enclosure shall be reliably secured so it cannot be readily displaced in service, and it shall meet the following requirements:

a) Viewing panes shall not shatter, crack, or become dislodged when both sides of the viewing panes in turn are subjected to the following tests:
   1) A force of 445 N (100 lbf)shall be exerted perpendicular to the surface in which the viewing pane is mounted. This force shall be evenly distributed over an area of 0.010 m^2 (16 in^2) (as nearly square as possible and as near the center of the pane as possible). If the viewing pane has an area less than 0.010 m^2 (16 in^2), the force shall be evenly distributed over the entire viewing area. The 445 N (100 lbf) force shall be sustained for 1 min.
   2) The viewing pane shall be subjected to an impact of 3.4 J (2.5 ft-lbs) using a steel ball approximately 0.54 kg (1.18 lb) in weight and approximately 50 mm (2 in) in diameter.

b) Separate samples may be used in each of the tests described a) 1) and a) 2).

c) If the viewing pane is intended to be exposed to insulating oil or other material in a tank, it shall be of a material that is resistant to the corrosive effects of the insulating material.

d) Category A equipment shall have lockable covers over the viewing panes if viewing panels are furnished.

A.3.11 Accessories

Drain valves, gauges, etc. should have a lockable cover on the enclosure designated as Category A.

A.3.12 Outdoor enclosure requirements

Enclosures intended for outdoor use primarily provide a degree of protection against rain and sleet. They shall meet the rain test and paint qualification design tests in 6.2.9 and 6.2.8, respectively.

Hinges and other attachments shall be resistant to corrosion. Metals should not be used in combinations that result in galvanic action that adversely affects any part of the device.

If an outdoor enclosure has any opening for passage of a wire or bus bar to a switchboard section or to a wireway, auxiliary gutter, or busway, a suitable gasket or other means should be provided that will prevent the entrance of water at such opening. If the opening is for attaching a busway, the outdoor enclosure and busway are to be investigated together to determine that the water does not enter along the bus bars.

A.3.12.1 Test requirements

Outdoor enclosures shall be tested and evaluated by

a) Rain test per 6.2.9

b) Paint qualifications per 6.2.8

Copyright © 2001 IEEE. All rights reserved.

Copyright The Institute of Electrical and Electronics Engineers, Inc.
Provided by IHS under license with IEEE
No reproduction or networking permitted without license from IHS
Not for Resale

A.3.12.2 Gasketing

An outdoor construction requiring a gasketed joint shall meet the following requirements:

a) A gasket of rubber or neoprene, or a composition of such materials, shall be exposed for 96 h to oxygen at a pressure of 2068 kPa (300 lbf/in^2) and a temperature of 70 °C. The gasket is considered adequately resistant to aging if no evidence of deterioration (such as softening, hardening, or cracking after flexing) is visible.

b) A gasket of thermoplastic material, or a composition of such material, may be accepted after considering the effects of heat aging, distortion under conditions of use, and the means of securing the gasket to the cover of the enclosure.

A.3.13 Exposed live parts

MEI switchgear shall have no exposed live conductors (such as entrance bushing studs, terminal connections, or bus bars) unless it is designated as Category C equipment.

A.3.14 External marking

An assembly shall be marked with its exposure category.

Copyright © 2001 IEEE. All rights reserved.

Copyright The Institute of Electrical and Electronics Engineers, Inc.
Provided by IHS under license with IEEE
No reproduction or networking permitted without license from IHS
Not for Resale